LONGHORN ARMY AMMUNITION PLANT KARNACK, TEXAS

ADMINISTRATIVE RECORD

Volume 8 of 13

2009

Bate Stamp Numbers
00077510 – 00078394

Prepared for

Department of the Army
Longhorn Army Ammunition Plant

1976 – 2009

LONGHORN ARMY AMMUNITION PLANT
KARNACK, TEXAS
ADMINISTRATIVE RECORD – CHRONOLOGICAL INDEX

VOLUME 8 of 13

2009

A. Title: Report (continued)–Appendix D to Final Feasibility Study, LHAAP-46, Plant 2 Area, Group 4, Longhorn Army Ammunition Plant, Karnack, Texas
Author(s): Shaw Environmental, Inc., Houston, Texas
Recipient: All Stakeholders
Date: October 28, 2009
Bate Stamp: 00077510 - 00078303

B. Title: Meeting Minutes–Monthly Manager's Meeting, Longhorn Army Ammunition Plant, Karnack, Texas
Author(s): Shaw Environmental, Inc., Houston, Texas
Recipient: All Stakeholders
Date: November 10, 2009
Bate Stamp: 00078304 - 00078373

C. Title: Meeting Minutes–Monthly Manager's Meeting, Longhorn Army Ammunition Plant, Karnack, Texas
Author(s): Shaw Environmental, Inc., Houston, Texas
Recipient: All Stakeholders
Date: December 1, 2009
Bate Stamp: 00078374 - 00078383

D. Title: Meeting Minutes–Longhorn AAP Restoration Advisory Board Meeting, Longhorn Army Ammunition Plant, Karnack, Texas
Author(s): Shaw Environmental, Inc., Houston, Texas
Recipient: All Stakeholders
Date: December 1, 2009
Bate Stamp: 00078384 - 00078394

2.2 Metals Data

2.2.1 Metals I C P Data

2.2.1.1 Summary Data

LABORATORY REPORT

00077513

L08100867

11/24/08 14:34

Submitted By

Microbac Laboratories Inc.
158 Starlite Drive
Marietta , OH 45750
(740) 373 - 4071

For

Account Name: Shaw E & I, Inc.
ABB Lummus Biulding
3010 Briarpark Drive Suite 4N
Houston, TX 77042
Attention: Jennifer Hoang

Project Number: 2773.025
Project: Longhorn AAP
Site: LONGHORN AAP KARNACK TX
Invoice Number: 597891
P.O. Number: 389869/ 390836(GWTP)

Sample Analysis Summary

Client ID	Lab ID	Method	Dilution	Date Received
LHSMW23-102808	L08100867-05	6010B	1	30-OCT-08
LHSMW23-102808	L08100867-05	6010B	100	30-OCT-08
LHSMW11-102708	L08100867-07	6010B	1	30-OCT-08
LHSMW11-102708	L08100867-07	6010B	10	30-OCT-08
LHSMW15-102708	L08100867-09	6010B	100	30-OCT-08
LHSMW15-102708	L08100867-09	6010B	1	30-OCT-08
46WW04-102708	L08100867-10	6010B	1	30-OCT-08
46WW04-102708	L08100867-10	6010B	10	30-OCT-08

Report Number: **L08100867**
Report Date : **November 24, 2008**

00077514

Sample Number: **L08100867-05**
Client ID: **LHSMW23-102808**
Matrix: **Water**
Workgroup Number: **WG286711**
Collect Date: **10/28/2008 11:40**
Sample Tag: **01**

PrePrep Method: **NONE**
Prep Method: **3005A**
Analytical Method: **6010B**
Analyst: **ED**
Dilution: **1**
Units: **mg/L**

Instrument: **PE-ICP2**
Prep Date: **10/31/2008 06:49**
Cal Date: **11/02/2008 15:41**
Run Date: **11/02/2008 21:36**
File ID: **P2.110208.213619**

Analyte	CAS. Number	Result	Qual	PQL	SDL
Aluminum, Total	7429-90-5		U	0.100	0.0500
Beryllium, Total	7440-41-7		U	0.00200	0.000500
Calcium, Total	7440-70-2	324		0.200	0.100
Cobalt, Total	7440-48-4	0.00486	J	0.00500	0.00250
Iron, Total	7439-89-6	0.654		0.100	0.0250
Magnesium, Total	7439-95-4	215		0.500	0.250
Potassium, Total	7440-09-7	2.04		1.00	0.250
Vanadium, Total	7440-62-2		U	0.0100	0.00500
Zinc, Total	7440-66-6	0.0250		0.0200	0.00500

U Not detected at or above adjusted sample detection limit
J The analyte was positively identified, but the quantitation was below the RL

Microbac®

Report Number: **L08100867**
Report Date : **November 24, 2008**

00077515

Sample Number: **L08100867-05**
Client ID: **LHSMW23-102808**
Matrix: **Water**
Workgroup Number: **WG286711**
Collect Date: **10/28/2008 11:40**
Sample Tag: **DL01**

PrePrep Method: **NONE**
Prep Method: **3005A**
Analytical Method: **6010B**
Analyst: **JYH**
Dilution: **100**
Units: **mg/L**

Instrument: **PE-ICP2**
Prep Date: **10/31/2008 06:49**
Cal Date: **11/04/2008 11:03**
Run Date: **11/04/2008 17:01**
File ID: **P2.110408.170109**

Analyte	CAS. Number	Result	Qual	PQL	SDL
Sodium, Total	7440-23-5	507		50.0	25.0

Sample Number: L08100867-07
Client ID: LHSMW11-102708
Matrix: Water
Workgroup Number: WG286711
Collect Date: 10/27/2008 12:15
Sample Tag: 01

PrePrep Method: NONE
Prep Method: 3005A
Analytical Method: 6010B
Analyst: ED
Dilution: 1
Units: mg/L

Instrument: PE-ICP2
Prep Date: 10/31/2008 06:49
Cal Date: 11/02/2008 15:41
Run Date: 11/02/2008 21:42
File ID: P2.110208.214246

Analyte	CAS. Number	Result	Qual	PQL	SDL
Aluminum, Total	7429-90-5		U	0.100	0.0500
Beryllium, Total	7440-41-7		U	0.00200	0.000500
Calcium, Total	7440-70-2	281		0.200	0.100
Cobalt, Total	7440-48-4	0.0334		0.00500	0.00250
Iron, Total	7439-89-6	0.815		0.100	0.0250
Magnesium, Total	7439-95-4	120		0.500	0.250
Potassium, Total	7440-09-7	0.265	J	1.00	0.250
Zinc, Total	7440-66-6	0.0195	J	0.0200	0.00500

U Not detected at or above adjusted sample detection limit
J The analyte was positively identified, but the quantitation was below the RL

Sample Number: L08100867-07
Client ID: LHSMW11-102708
Matrix: Water
Workgroup Number: WG286711
Collect Date: 10/27/2008 12:15
Sample Tag: DL01

PrePrep Method: NONE
Prep Method: 3005A
Analytical Method: 6010B
Analyst: JYH
Dilution: 10
Units: mg/L

Instrument: PE-ICP2
Prep Date: 10/31/2008 06:49
Cal Date: 11/04/2008 11:03
Run Date: 11/04/2008 17:07
File ID: P2.110408.170729

Analyte	CAS. Number	Result	Qual	PQL	SDL
Sodium, Total	7440-23-5	630		5.00	2.50
Vanadium, Total	7440-62-2		U	0.100	0.0500

U Not detected at or above adjusted sample detection limit

Report Number: **L08100867**
Report Date : **November 24, 2008**

00077518

Sample Number: **L08100867-09**
Client ID: **LHSMW15-102708**
Matrix: **Water**
Workgroup Number: **WG286711**
Collect Date: **10/27/2008 13:50**
Sample Tag: **DL01**

PrePrep Method: **NONE**
Prep Method: **3005A**
Analytical Method: **6010B**
Analyst: **JYH**
Dilution: **100**
Units: **mg/L**

Instrument: **PE-ICP2**
Prep Date: **10/31/2008 06:49**
Cal Date: **11/04/2008 11:03**
Run Date: **11/04/2008 17:13**
File ID: **P2.110408.171352**

Analyte	CAS. Number	Result	Qual	PQL	SDL
Calcium, Total	7440-70-2	509		20.0	10.0
Sodium, Total	7440-23-5	1070		50.0	25.0

Report Number: **L08100867**
Report Date : **November 24, 2008**

00077519

Sample Number: **L08100867-09**
Client ID: **LHSMW15-102708**
Matrix: **Water**
Workgroup Number: **WG286711**
Collect Date: **10/27/2008 13:50**
Sample Tag: **01**

PrePrep Method: **NONE**
Prep Method: **3005A**
Analytical Method: **6010B**
Analyst: **ED**
Dilution: **1**
Units: **mg/L**

Instrument: **PE-ICP2**
Prep Date: **10/31/2008 06:49**
Cal Date: **11/02/2008 15:41**
Run Date: **11/02/2008 21:49**
File ID: **P2.110208.214905**

Analyte	CAS. Number	Result	Qual	PQL	SDL
Aluminum, Total	7429-90-5		U	0.100	0.0500
Beryllium, Total	7440-41-7		U	0.00200	0.000500
Cobalt, Total	7440-48-4		U	0.00500	0.00250
Iron, Total	7439-89-6		U	0.100	0.0250
Magnesium, Total	7439-95-4	276		0.500	0.250
Potassium, Total	7440-09-7	2.65		1.00	0.250
Vanadium, Total	7440-62-2		U	0.0100	0.00500
Zinc, Total	7440-66-6	0.0501		0.0200	0.00500

U Not detected at or above adjusted sample detection limit

Microbac®

Sample Number: L08100867-10
Client ID: 46WW04-102708
Matrix: Water
Workgroup Number: WG286711
Collect Date: 10/27/2008 14:35
Sample Tag: 01

PrePrep Method: NONE
Prep Method: 3005A
Analytical Method: 6010B
Analyst: ED
Dilution: 1
Units: mg/L

Instrument: PE-ICP2
Prep Date: 10/31/2008 06:49
Cal Date: 11/02/2008 15:41
Run Date: 11/02/2008 21:55
File ID: P2.110208.215534

Analyte	CAS. Number	Result	Qual	PQL	SDL
Aluminum, Total	7429-90-5		U	0.100	0.0500
Beryllium, Total	7440-41-7	0.000507	J	0.00200	0.000500
Cobalt, Total	7440-48-4	0.0269		0.00500	0.00250
Iron, Total	7439-89-6	2.23		0.100	0.0250
Magnesium, Total	7439-95-4	225		0.500	0.250
Potassium, Total	7440-09-7	2.97		1.00	0.250
Zinc, Total	7440-66-6	0.0219		0.0200	0.00500

U Not detected at or above adjusted sample detection limit
J The analyte was positively identified, but the quantitation was below the RL

Report Number: **L08100867**
Report Date : **November 24, 2008**

00077521

Sample Number: **L08100867-10**
Client ID: **46WW04-102708**
Matrix: **Water**
Workgroup Number: **WG286711**
Collect Date: **10/27/2008 14:35**
Sample Tag: **DL01**

PrePrep Method: **NONE**
Prep Method: **3005A**
Analytical Method: **6010B**
Analyst: **JYH**
Dilution: **10**
Units: **mg/L**

Instrument: **PE-ICP2**
Prep Date: **10/31/2008 06:49**
Cal Date: **11/04/2008 11:03**
Run Date: **11/04/2008 17:20**
File ID: **P2.110408.172013**

Analyte	CAS. Number	Result	Qual	PQL	SDL
Calcium, Total	7440-70-2	436		2.00	1.00
Sodium, Total	7440-23-5	460		5.00	2.50
Vanadium, Total	7440-62-2		U	0.100	0.0500

U Not detected at or above adjusted sample detection limit

Microbac®

2.2.1.2 QC Summary Data

Example 6010 Calculations
Perkin Elmer Optima 4300 DV

1.0 Initial Calibration (ICAL) Parameters
The system performs linear regression from data consisting of a blank and three standards.

2.0 Calculating the concentration (C) of an element in water using data from prep log, run log, and quantitation report (note:the data system performs this calculation automatically when correction factors have been entered):

$$Cx = Cs \times \frac{Vf}{Vi} \times D$$

Where:	**Example:**
Cs = Concentration computed by the data system in ug/mL (ppm)	0.1
Vf = Final volume (mL)	50
Vi = Initial volume (mL)	50
D = Dilution factor as a multiplier (10X = 10)	1
Cx = Concentration of element in ug/mL (mg/L)	0.1

3.0 Calculating the concentration (C) of an element in soil using data from prep log, run log, and quantitation report (note: the data system performs this calculation automatically when correction factors have been entered):

$$Cx = Cs \times \frac{Vf}{Vi} \times D$$

Where:	**Example:**
Cs = Concentration computed by the data system (mg/L) (ppm)	0.1
Vf = Final volume (mL)	50
Vi = Initial weight (g)	1
D = Dilution factor as a multiplier (10X = 10)	1
Cx = Concentration of element in ug/g (mg/kg)	5

4.0 Adjusting the concentration to dry weight:

$$Cdry = \frac{Cx \times 100}{Px}$$

Where:	**Example:**
Cx = Concentration calculated as received (wet basis)	5
Px = Percent solids of sample (%wt)	80
$Cdry$ = Concentration calculated as dry weight (mg/kg)	6.25

Example 6010 Calculations
Thermo Scientific IRIS Advantage

1.0 Initial Calibration (ICAL) Parameters
The system performs linear regression from data consisting of a blank and three standards.

2.0 Calculating the concentration (C) of an element in water using data from prep log, run log, and quantitation report (note:the data system performs this calculation automatically when correction factors have been entered):

$$Cx = Cs \times \frac{Vf}{Vi} \times D$$

Where:	**Example:**
Cs = Concentration computed by the data system in ug/mL (ppm)	0.1
Vf = Final volume (mL)	50
Vi = Initial volume (mL)	50
D = Dilution factor as a multiplier (10X = 10)	1
Cx = Concentration of element in ug/mL (mg/L)	0.1

3.0 Calculating the concentration (C) of an element in soil using data from prep log, run log, and quantitation report (note: the data system performs this calculation automatically when correction factors have been entered):

$$Cx = Cs \times \frac{Vf}{Vi} \times D$$

Where:	**Example:**
Cs = Concentration computed by the data system (mg/L) (ppm)	0.1
Vf = Final volume (mL)	50
Vi = Initial weight (g)	1
D = Dilution factor as a multiplier (10X = 10)	1
Cx = Concentration of element in ug/g (mg/kg)	5

4.0 Adjusting the concentration to dry weight:

$$Cdry = \frac{Cx \times 100}{Px}$$

Where:	**Example:**
Cx = Concentration calculated as received (wet basis)	5
Px = Percent solids of sample (%wt)	80
$Cdry$ = Concentration calculated as dry weight (mg/kg)	6.25

Example 6010 Calculations
Thermo Scientific iCAP 6500

1.0 Initial Calibration (ICAL) Parameters
The system performs linear regression from data consisting of a blank and four standards.

2.0 Calculating the concentration (C) of an element in water using data from prep log, run log, and quantitation report (note:the data system performs this calculation automatically when correction factors have been entered):

$$Cx = Cs \times \frac{Vf}{Vi} \times D$$

Where:	**Example:**
Cs = Concentration computed by the data system in ug/mL (ppm)	0.1
Vf = Final volume (mL)	50
Vi = Initial volume (mL)	50
D = Dilution factor as a multiplier (10X = 10)	1
Cx = Concentration of element in ug/mL (mg/L)	0.1

3.0 Calculating the concentration (C) of an element in soil using data from prep log, run log, and quantitation report (note: the data system performs this calculation automatically when correction factors have been entered):

$$Cx = Cs \times \frac{Vf}{Vi} \times D$$

Where:	**Example:**
Cs = Concentration computed by the data system (mg/L) (ppm)	0.1
Vf = Final volume (mL)	50
Vi = Initial weight (g)	1
D = Dilution factor as a multiplier (10X = 10)	1
Cx = Concentration of element in ug/g (mg/kg)	5

4.0 Adjusting the concentration to dry weight:

$$Cdry = \frac{Cx \times 100}{Px}$$

Where:	**Example:**
Cx = Concentration calculated as received (wet basis)	5
Px = Percent solids of sample (%wt)	80
$Cdry$ = Concentration calculated as dry weight (mg/kg)	6.25

Microbac Laboratories Inc.
Metals Digest Log

00077526

Workgroup: WG286554
Analyst: REK
Method: 3005A
Run Date: 10/31/2008 06:49
Hotblock Start Temp: 94.8 @ 05:55
Hotblock End Temp: 95 @ 09:55

SOP: ME401 Revison 13
Spike Solution: STD27613
Spike Witness: SDL
HNO3 Lot #: COA13347
hcl Lot #: COA13324
Digest tubes Lot #: COA13407

	SAMPLE #	Type	Matrix	Initial Amount	Final Volume	Spike Amount	Due Date
1	WG286554-02	BLANK	1	50 mL	50 mL		
2	WG286554-03	LCS	1	50 mL	50 mL	5 mL	
3	L08100854-01	SAMP	1	50 mL	50 mL		11/06/08
4	L08100854-02	SAMP	1	50 mL	50 mL		11/06/08
5	L08100854-03	SAMP	1	50 mL	50 mL		11/06/08
6	L08100858-01	SAMP	1	50 mL	50 mL		11/06/08
7	WG286554-01	REF	1	50 mL	50 mL		
8	L08100862-02	RS02	1	50 mL	50 mL		11/13/08
9	WG286554-04	MS	1	50 mL	50 mL	5 mL	
10	L08100862-05	MS02	1	50 mL	50 mL	5 mL	11/13/08
11	WG286554-05	MSD	1	50 mL	50 mL	5 mL	
12	L08100862-08	SD02	1	50 mL	50 mL	5 mL	11/13/08
13	L08100862-11	SAMP	1	50 mL	50 mL		11/13/08
14	L08100862-14	SAMP	1	50 mL	50 mL		11/13/08
15	L08100862-17	SAMP	1	50 mL	50 mL		11/13/08
16	L08100862-20	SAMP	1	50 mL	50 mL		11/13/08
17	L08100862-23	SAMP	1	50 mL	50 mL		11/13/08
18	L08100867-05	SAMP	1	50 mL	50 mL		11/10/08
19	L08100867-07	SAMP	1	50 mL	50 mL		11/10/08
20	L08100867-09	SAMP	1	50 mL	50 mL		11/10/08
21	L08100867-10	SAMP	1	50 mL	50 mL		11/10/08

Analyst: _____

Reviewer: _____

BLOCK_DIG - Modified 07/22/2008
PDF ID: 1237471
Report generated: 10/31/2008 10:13

Microbac®

Run Log ID: **25044**

00077527

Microbac Laboratories Inc.

Instrument Run Log

Instrument: PE-ICP2 Dataset: 110208H2R2.CSV

Analyst1: ED Analyst2: NA

Method: 6010B SOP: ME600E Rev: 8

Maintenance Log ID: 26449

Calibration Std: STD29127 ICV/CCV Std: STD29409 Post Spike: STD27612

ICSA: STD29568 ICSAB: STD29411

Workgroups: 285641,286710,286258,286464,286711,286588,286255,

Comments: 286256,286463

Seq.	File ID	Sample	ID	Prep	Dil	Reference	Date/Time
1	P2.110208.151655	WG286797-01	Calibration Point		1		11/02/08 15:16
2	P2.110208.152306	WG286797-02	Calibration Point		1		11/02/08 15:23
3	P2.110208.152924	WG286797-03	Calibration Point		1		11/02/08 15:29
4	P2.110208.153541	WG286797-04	Calibration Point		1		11/02/08 15:35
5	P2.110208.154157	WG286797-05	Calibration Point		1		11/02/08 15:41
6	P2.110208.154729	WG286797-06	Initial Calibration Verification		1		11/02/08 15:47
7	P2.110208.155349	WG286797-07	Initial Calib Blank		1		11/02/08 15:53
8	P2.110208.160005	WG286797-08	Interference Check		1		11/02/08 16:00
9	P2.110208.160525	WG286797-09	Interference Check		1		11/02/08 16:05
10	P2.110208.161047	WG286797-10	CCV		1		11/02/08 16:10
11	P2.110208.161705	WG286797-11	CCB		1		11/02/08 16:17
12	P2.110208.163215	WG285526-02	Reference Sample		1	L08100573-13	11/02/08 16:32
13	P2.110208.163910	WG285526-07	Matrix Spike	50/50	1	L08100573-13	11/02/08 16:39
14	P2.110208.164532	WG285526-08	Matrix Spike Duplica	50/50	1	L08100573-13	11/02/08 16:45
15	P2.110208.165154	L08100573-16	MAIN DISCHARGE-IS-5-DUI	50/50	1		11/02/08 16:51
16	P2.110208.165808	WG286553-02	Method/Prep Blank	50/50	1		11/02/08 16:58
17	P2.110208.170428	WG286553-03	Laboratory Control S	50/50	1		11/02/08 17:04
18	P2.110208.171048	WG286553-01	Reference Sample		1	L08100771-01	11/02/08 17:10
19	P2.110208.171706	WG286710-01	Post Digestion Spike		1	L08100771-01	11/02/08 17:17
20	P2.110208.172328	WG286710-02	Serial Dilution		5	L08100771-01	11/02/08 17:23
21	P2.110208.172951	WG286553-04	Matrix Spike	50/50	1	L08100771-01	11/02/08 17:29
22	P2.110208.173614	WG286797-12	CCV		1		11/02/08 17:36
23	P2.110208.174234	WG286797-13	CCB		1		11/02/08 17:42
24	P2.110208.174853	WG286553-05	Matrix Spike Duplica	50/50	1	L08100771-01	11/02/08 17:48
25	P2.110208.175508	L08100781-01	STRICKLER/LEONARD \#7 F	50/50	1	WG286282-01	11/02/08 17:55
26	P2.110208.180228	L08100843-04	OUTFALL 003/COMP	50/50	1		11/02/08 18:02
27	P2.110208.180851	L08100843-06	OUTFALL 800/COMP	50/50	1		11/02/08 18:08
28	P2.110208.181508	L08100846-01	OUTFALL 002/COMP	50/50	1		11/02/08 18:15
29	P2.110208.182132	L08100761-03	FC 103	50/50	2		11/02/08 18:21
30	P2.110208.182751	WG286307-01	Method/Prep Blank	50/50	1		11/02/08 18:27
31	P2.110208.183410	WG286307-02	Laboratory Control S	50/50	1		11/02/08 18:34
32	P2.110208.184024	WG286307-03	Laboratory Control S	50/50	1		11/02/08 18:40
33	P2.110208.184644	L08100784-01	MBBR EFF	50/50	5		11/02/08 18:46
34	P2.110208.185309	WG286797-14	CCV		1		11/02/08 18:53
35	P2.110208.185928	WG286797-15	CCB		1		11/02/08 18:59
36	P2.110208.190545	L08100784-02	MBBR INF	50/50	5		11/02/08 19:05
37	P2.110208.191203	L08100788-01	DIANAL ACP-10 WATER EX	5/50	1		11/02/08 19:12

Page: 1 Approved: November 04, 2008

Maren Berry

Microbac®

Microbac Laboratories Inc.

Instrument Run Log

Instrument: PE-ICP2 Dataset: 110208H2R2.CSV
Analyst1: ED Analyst2: NA
Method: 6010B SOP: ME600E Rev: 8
Maintenance Log ID: 26449

Calibration Std: STD29127 ICV/CCV Std: STD29409 Post Spike: STD27612
ICSA: STD29568 ICSAB: STD29411

Workgroups: 285641,286710,286258,286464,286711,286588,286255,

Comments: 286256,286463

Seq.	File ID	Sample	ID	Prep	Dil	Reference	Date/Time
38	P2.110208.191823	WG286464-01	Post Digestion Spike		1	L08100788-01	11/02/08 19:18
39	P2.110208.192444	WG286464-02	Serial Dilution		5	L08100788-01	11/02/08 19:24
40	P2.110208.193058	WG286554-02	Method/Prep Blank	50/50	1		11/02/08 19:30
41	P2.110208.193719	WG286554-03	Laboratory Control S	50/50	1		11/02/08 19:37
42	P2.110208.194340	L08100854-01	15383-W2107	50/50	1		11/02/08 19:43
43	P2.110208.195000	L08100854-02	15424-W2106	50/50	1		11/02/08 19:50
44	P2.110208.195614	L08100854-03	15490-W2124	50/50	1		11/02/08 19:56
45	P2.110208.200233	L08100858-01	W9021	50/50	1		11/02/08 20:02
46	P2.110208.200759	WG286797-16	CCV		1		11/02/08 20:07
47	P2.110208.201418	WG286797-17	CCB		1		11/02/08 20:14
48	P2.110208.202035	WG286554-01	Reference Sample		1	L08100862-02	11/02/08 20:20
49	P2.110208.202649	WG286711-01	Post Digestion Spike		1	L08100862-02	11/02/08 20:26
50	P2.110208.203311	WG286711-02	Serial Dilution		5	L08100862-02	11/02/08 20:33
51	P2.110208.203930	WG286554-04	Matrix Spike	50/50	1	L08100862-02	11/02/08 20:39
52	P2.110208.204553	WG286554-05	Matrix Spike Duplica	50/50	1	L08100862-02	11/02/08 20:45
53	P2.110208.205208	L08100862-11	SW2A-230-14	50/50	1		11/02/08 20:52
54	P2.110208.205828	L08100862-14	SW2B-230-14	50/50	1		11/02/08 20:58
55	P2.110208.210449	L08100862-17	SW3A-230-14	50/50	1		11/02/08 21:04
56	P2.110208.211103	L08100862-20	SW4A-230-14	50/50	1		11/02/08 21:11
57	P2.110208.211723	L08100862-23	SW5A-230-14	50/50	1		11/02/08 21:17
58	P2.110208.212343	WG286797-18	CCV		1		11/02/08 21:23
59	P2.110208.213003	WG286797-19	CCB		1		11/02/08 21:30
60	P2.110208.213619	L08100867-05	LHSMW23-102808	50/50	1		11/02/08 21:36
61	P2.110208.214246	L08100867-07	LHSMW11-102708	50/50	1		11/02/08 21:42
62	P2.110208.214905	L08100867-09	LHSMW15-102708	50/50	1		11/02/08 21:49
63	P2.110208.215534	L08100867-10	46WW04-102708	50/50	1		11/02/08 21:55
64	P2.110208.220201	WG286564-02	Method/Prep Blank	50/50	1		11/02/08 22:02
65	P2.110208.220814	WG286564-03	Laboratory Control S	50/50	1		11/02/08 22:08
66	P2.110208.221435	WG286510-01	Fluid Blank		1		11/02/08 22:14
67	P2.110208.222100	L08100808-34	SR-208-5177	5/50	1		11/02/08 22:21
68	P2.110208.222718	L08100808-35	SR-208-5152	5/50	1		11/02/08 22:27
69	P2.110208.223342	WG286564-01	Reference Sample		1	L08100808-36	11/02/08 22:33
70	P2.110208.224007	WG286797-20	CCV		1		11/02/08 22:40
71	P2.110208.224628	WG286797-21	CCB		1		11/02/08 22:46
72	P2.110208.225245	WG286588-01	Post Digestion Spike		1	L08100808-36	11/02/08 22:52
73	P2.110208.225907	WG286588-02	Serial Dilution		5	L08100808-36	11/02/08 22:59
74	P2.110208.230524	WG286564-04	Matrix Spike	5/50	1	L08100808-36	11/02/08 23:05

Page: 2 Approved: November 04, 2008

Maren Berry

Microbac®

Microbac Laboratories Inc.

Instrument Run Log

Instrument: PE-ICP2 Dataset: 110208H2R2.CSV
Analyst1: ED Analyst2: NA
Method: 6010B SOP: ME600E Rev: 8
Maintenance Log ID: 26449

Calibration Std: STD29127 ICV/CCV Std: STD29409 Post Spike: STD27612
ICSA: STD29568 ICSAB: STD29411

Workgroups: 285641,286710,286258,286464,286711,286588,286255,

Comments: 286256,286463

Seq.	File ID	Sample	ID	Prep	Dil	Reference	Date/Time
75	P2.110208.231146	WG286564-05	Matrix Spike Duplica	5/50	1	L08100808-36	11/02/08 23:11
76	P2.110208.231808	L08100827-01	13837-SSP0009	5/50	1		11/02/08 23:18
77	P2.110208.232426	L08100838-01	GT08058	5/50	1	WG286667-01	11/02/08 23:24
78	P2.110208.233047	L08100840-01	GT080075	5/50	1		11/02/08 23:30
79	P2.110208.233712	L08100840-02	GT080076	5/50	1		11/02/08 23:37
80	P2.110208.234329	WG286222-02	Method/Prep Blank	50/50	1		11/02/08 23:43
81	P2.110208.234952	WG286222-03	Laboratory Control S	50/50	1		11/02/08 23:49
82	P2.110208.235613	WG286797-22	CCV		1		11/02/08 23:56
83	P2.110308.000234	WG286797-23	CCB		1		11/03/08 00:02
84	P2.110308.000852	WG286155-01	Fluid Blank		1		11/03/08 00:08
85	P2.110308.001517	WG286222-01	Reference Sample		1	L08100715-12	11/03/08 00:15
86	P2.110308.002136	WG286222-04	Matrix Spike	5/50	1	L08100715-12	11/03/08 00:21
87	P2.110308.002803	WG286222-05	Matrix Spike Duplica	5/50	1	L08100715-12	11/03/08 00:28
88	P2.110308.003426	L08100736-01	TWC-1	5/50	1		11/03/08 00:34
89	P2.110308.004043	WG286255-03	Post Digestion Spike		1	L08100736-01	11/03/08 00:40
90	P2.110308.004709	WG286255-04	Serial Dilution		5	L08100736-01	11/03/08 00:47
91	P2.110308.005329	L08100736-02	TWC-2	5/50	1		11/03/08 00:53
92	P2.110308.005947	WG286797-24	Linear Range Check		1		11/03/08 00:59
93	P2.110308.010612	WG286199-02	Method/Prep Blank	50/50	1		11/03/08 01:06
94	P2.110308.011233	WG286797-25	CCV		1		11/03/08 01:12
95	P2.110308.011849	WG286797-26	CCB		1		11/03/08 01:18
96	P2.110308.012510	WG286199-03	Laboratory Control S	50/50	1		11/03/08 01:25
97	P2.110308.013132	L08100741-01	0810-283-1	50/50	1	WG286366-05	11/03/08 01:31
98	P2.110308.013757	L08100741-02	0810-284-1	50/50	1		11/03/08 01:37
99	P2.110308.014412	L08100742-01	0810-303-1	50/50	1		11/03/08 01:44
100	P2.110308.015032	L08100742-02	0810-304-1	50/50	1		11/03/08 01:50
101	P2.110308.015657	L08100746-01	NR-12-102-102408	50/50	1	WG286165-04	11/03/08 01:56
102	P2.110308.020313	WG286199-01	Reference Sample		1	L08100746-02	11/03/08 02:03
103	P2.110308.020939	WG286256-01	Post Digestion Spike		1	L08100746-02	11/03/08 02:09
104	P2.110308.021606	WG286256-02	Serial Dilution		5	L08100746-02	11/03/08 02:16
105	P2.110308.022226	WG286199-04	Matrix Spike	50/50	1	L08100746-02	11/03/08 02:22
106	P2.110308.022855	WG286797-27	CCV		1		11/03/08 02:28
107	P2.110308.023518	WG286797-28	CCB		1		11/03/08 02:35
108	P2.110308.024131	WG286199-05	Matrix Spike Duplica	50/50	1	L08100746-02	11/03/08 02:41
109	P2.110308.024805	L08100746-05	NR-12-104-102408-D	50/50	1		11/03/08 02:48
110	P2.110308.025431	L08100753-02	EFFLUENT	50/50	1		11/03/08 02:54
111	P2.110308.030105	L08100757-02	MW-2N	50/50	1		11/03/08 03:01

Page: 3 Approved: November 04, 2008

Maren Berry

Microbac®

Microbac Laboratories Inc.

Instrument Run Log

Instrument: PE-ICP2 Dataset: 110208H2R2.CSV
Analyst1: ED Analyst2: NA
Method: 6010B SOP: ME600E Rev: 8
Maintenance Log ID: 26449

Calibration Std: STD29127 ICV/CCV Std: STD29409 Post Spike: STD27612
ICSA: STD29568 ICSAB: STD29411

Workgroups: 285641,286710,286258,286464,286711,286588,286255,

Comments: 286256,286463

Seq.	File ID	Sample	ID	Prep	Dil	Reference	Date/Time
112	P2.110308.030731	L08100757-04	MW-1N	50/50	1		11/03/08 03:07
113	P2.110308.031352	WG286434-01	Method/Prep Blank	.25/50	1		11/03/08 03:13
114	P2.110308.032007	WG286434-02	Laboratory Control S	.25/50	1		11/03/08 03:20
115	P2.110308.032629	WG286434-03	Laboratory Control S	.25/50	1		11/03/08 03:26
116	P2.110308.033250	L08100775-01	GT080072	.304/50	1		11/03/08 03:32
117	P2.110308.033912	WG286463-01	Post Digestion Spike		1	L08100775-01	11/03/08 03:39
118	P2.110308.034528	WG286797-29	CCV		1		11/03/08 03:45
119	P2.110308.035150	WG286797-30	CCB		1		11/03/08 03:51
120	P2.110308.035811	WG286463-02	Serial Dilution		5	L08100775-01	11/03/08 03:58
121	P2.110308.040426	L08100775-02	GT080073	.266/50	1		11/03/08 04:04
122	P2.110308.041046	L08100775-03	GT080074	.262/50	1		11/03/08 04:10
123	P2.110308.041708	WG286797-31	CCV		1		11/03/08 04:17
124	P2.110308.042324	WG286797-32	CCB		1		11/03/08 04:23
125	P2.110308.042944	WG286797-33	Interference Check		1		11/03/08 04:29
126	P2.110308.043507	WG286797-34	Interference Check		1		11/03/08 04:35
127	P2.110308.044023	WG286797-35	CCV		1		11/03/08 04:40
128	P2.110308.044637	WG286797-36	CCB		1		11/03/08 04:46

Page: 4 Approved: November 04, 2008

Maren Berry

Microbac®

Microbac Laboratories Inc.

Instrument Run Log

Instrument: PE-ICP2 Dataset: 110408H.CSV
Analyst1: JYH Analyst2: N/A
Method: 6010B SOP: ME600E Rev: 8
Maintenance Log ID: 26449

Calibration Std: STD29127 ICV/CCV Std: STD29409 Post Spike: STD27612
ICSA: STD29568 ICSAB: STD29411

Workgroups: 286819,286238,286711,286362,286891,286826

Comments:

Seq.	File ID	Sample	ID	Prep	Dil	Reference	Date/Time
1	P2.110408.103818	WG286969-01	Calibration Point		1		11/04/08 10:38
2	P2.110408.104435	WG286969-02	Calibration Point		1		11/04/08 10:44
3	P2.110408.105046	WG286969-03	Calibration Point		1		11/04/08 10:50
4	P2.110408.105701	WG286969-04	Calibration Point		1		11/04/08 10:57
5	P2.110408.110322	WG286969-05	Calibration Point		1		11/04/08 11:03
6	P2.110408.110848	WG286969-06	Initial Calibration Verification		1		11/04/08 11:08
7	P2.110408.111509	WG286969-07	Initial Calib Blank		1		11/04/08 11:15
8	P2.110408.112130	WG286969-08	Interference Check		1		11/04/08 11:21
9	P2.110408.112652	WG286969-09	Interference Check		1		11/04/08 11:26
10	P2.110408.113212	WG286969-10	CCV		1		11/04/08 11:32
11	P2.110408.113831	WG286969-11	CCB		1		11/04/08 11:38
12	P2.110408.114448	WG286737-02	Method/Prep Blank	50/50	1		11/04/08 11:44
13	P2.110408.115108	WG286737-03	Laboratory Control S	50/50	1		11/04/08 11:51
14	P2.110408.115729	WG286737-01	Reference Sample		1	L08100866-02	11/04/08 11:57
15	P2.110408.120342	L08100866-03	LFIMW1B-0812-DUP2	50/50	1		11/04/08 12:03
16	P2.110408.121003	WG286737-04	Matrix Spike	50/50	1	L08100866-02	11/04/08 12:10
17	P2.110408.121623	WG286737-05	Matrix Spike Duplica	50/50	1	L08100866-02	11/04/08 12:16
18	P2.110408.122243	L08100866-06	LFIMW4A-0812	50/50	1		11/04/08 12:22
19	P2.110408.122909	WG286819-01	Post Digestion Spike		1	L08100866-06	11/04/08 12:29
20	P2.110408.123541	WG286819-02	Serial Dilution		5	L08100866-06	11/04/08 12:35
21	P2.110408.124211	WG286969-12	CCV		1		11/04/08 12:42
22	P2.110408.124829	WG286969-13	CCB		1		11/04/08 12:48
23	P2.110408.125445	L08100866-09	MW95-2-0810	50/50	1		11/04/08 12:54
24	P2.110408.130103	L08100866-10	MW95-2-0810-DUP3	50/50	1		11/04/08 13:01
25	P2.110408.130728	L08100866-11	GPMW8-0810	50/50	1		11/04/08 13:07
26	P2.110408.131355	L08100828-01	LF7MW04-0810	50/50	1		11/04/08 13:13
27	P2.110408.132022	L08100828-02	LFD2-0810	50/50	1	WG286527-04	11/04/08 13:20
28	P2.110408.132641	L08100828-03	LFD2-0810-DUP4	50/50	1		11/04/08 13:26
29	P2.110408.133304	L08100881-36	ORG-SO1-230-14	50/50	1		11/04/08 13:33
30	P2.110408.133924	L08100881-38	ORG-SO2-230-14	50/50	1		11/04/08 13:39
31	P2.110408.134537	L08100892-02	0810-348-1	50/50	1		11/04/08 13:45
32	P2.110408.135159	WG286969-14	CCV		1		11/04/08 13:51
33	P2.110408.135818	WG286969-15	CCB		1		11/04/08 13:58
34	P2.110408.140434	L08100893-13	10088-W0001	50/50	1		11/04/08 14:04
35	P2.110408.141052	L08100893-24	10091-W0001	50/50	1		11/04/08 14:10
36	P2.110408.141706	L08100894-30	10310-W0001	50/50	1		11/04/08 14:17
37	P2.110408.142326	L08100896-11	10327-W0001	50/50	1		11/04/08 14:23

Page: 1 Approved: November 05, 2008

Marcu Berry

Microbac®

Microbac Laboratories Inc.

Instrument Run Log

Instrument: PE-ICP2 Dataset: 110408H.CSV
Analyst1: JYH Analyst2: N/A
Method: 6010B SOP: ME600E Rev: 8
Maintenance Log ID: 26449

Calibration Std: STD29127 ICV/CCV Std: STD29409 Post Spike: STD27612
ICSA: STD29568 ICSAB: STD29411

Workgroups: 286819,286238,286711,286362,286891,286826

Comments:

Seq.	File ID	Sample	ID	Prep	Dil	Reference	Date/Time
38	P2.110408.142946	L08100896-12	10327-W0002	50/50	1		11/04/08 14:29
39	P2.110408.143606	L08100898-06	10334-W0001	50/50	1		11/04/08 14:36
40	P2.110408.144220	L08100898-19	10335-W0001	50/50	1		11/04/08 14:42
41	P2.110408.145027	WG286737-01	Reference Sample		100	L08100866-02	11/04/08 14:50
42	P2.110408.145640	L08100866-03	LFIMW1B-0812-DUP2	50/50	100		11/04/08 14:56
43	P2.110408.150300	WG286737-04	Matrix Spike	50/50	100	L08100866-02	11/04/08 15:03
44	P2.110408.150920	WG286969-16	CCV		1		11/04/08 15:09
45	P2.110408.151541	WG286969-17	CCB		1		11/04/08 15:15
46	P2.110408.151952	WG286737-05	Matrix Spike Duplica	50/50	100	L08100866-02	11/04/08 15:19
47	P2.110408.152609	L08100866-06	LFIMW4A-0812	50/50	100		11/04/08 15:26
48	P2.110408.153230	WG286819-01	Post Digestion Spike		100	L08100866-06	11/04/08 15:32
49	P2.110408.153851	WG286819-02	Serial Dilution		500	L08100866-06	11/04/08 15:38
50	P2.110408.154504	L08100866-09	MW95-2-0810	50/50	100		11/04/08 15:45
51	P2.110408.155128	L08100866-10	MW95-2-0810-DUP3	50/50	100		11/04/08 15:51
52	P2.110408.155752	L08100866-11	GPMW8-0810	50/50	100		11/04/08 15:57
53	P2.110408.160410	L08100828-01	LF7MW04-0810	50/50	100		11/04/08 16:04
54	P2.110408.161034	L08100828-02	LFD2-0810	50/50	100	WG286527-04	11/04/08 16:10
55	P2.110408.161653	L08100828-03	LFD2-0810-DUP4	50/50	100		11/04/08 16:16
56	P2.110408.162313	WG286969-18	CCV		1		11/04/08 16:23
57	P2.110408.162930	WG286969-19	CCB		1		11/04/08 16:29
58	P2.110408.163546	WG286068-01	Reference Sample		2	L08100718-01	11/04/08 16:35
59	P2.110408.164204	WG286068-04	Matrix Spike	50/50	2	L08100718-01	11/04/08 16:42
60	P2.110408.164831	WG286068-05	Matrix Spike Duplica	50/50	2	L08100718-01	11/04/08 16:48
61	P2.110408.165456	L08100718-07	PZ06-102208	50/50	100		11/04/08 16:54
62	P2.110408.170109	L08100867-05	LHSMW23-102808	50/50	100		11/04/08 17:01
63	P2.110408.170729	L08100867-07	LHSMW11-102708	50/50	10		11/04/08 17:07
64	P2.110408.171352	L08100867-09	LHSMW15-102708	50/50	100		11/04/08 17:13
65	P2.110408.172013	L08100867-10	46WW04-102708	50/50	10		11/04/08 17:20
66	P2.110408.172630	L08100718-04	MW21-102308	1/50	100		11/04/08 17:26
67	P2.110408.173247	WG286362-01	Post Digestion Spike		100		11/04/08 17:32
68	P2.110408.173909	WG286969-20	CCV		1		11/04/08 17:39
69	P2.110408.174527	WG286969-21	CCB		1		11/04/08 17:45
70	P2.110408.175144	WG286362-02	Serial Dilution		500		11/04/08 17:51
71	P2.110408.175758	WG286864-02	Method/Prep Blank	50/50	1		11/04/08 17:57
72	P2.110408.180418	WG286864-03	Laboratory Control S	50/50	1		11/04/08 18:04
73	P2.110408.181038	WG286754-01	Fluid Blank		1		11/04/08 18:10
74	P2.110408.181655	WG286969-22	CCV		1		11/04/08 18:16

Page: 2 Approved: November 05, 2008

Maren Berry

Microbac®

Microbac Laboratories Inc.

Instrument Run Log

Instrument: PE-ICP2 Dataset: 110408H.CSV
Analyst1: JYH Analyst2: N/A
Method: 6010B SOP: ME600E Rev: 8
Maintenance Log ID: 26449

Calibration Std: STD29127 ICV/CCV Std: STD29409 Post Spike: STD27612
ICSA: STD29568 ICSAB: STD29411

Workgroups: 286819,286238,286711,286362,286891,286826

Comments:

Seq.	File ID	Sample	ID	Prep	Dil	Reference	Date/Time
75	P2.110408.182324	WG286969-23	CCB		1		11/04/08 18:23
76	P2.110408.182939	WG286864-01	Reference Sample		1	L08100849-01	11/04/08 18:29
77	P2.110408.183557	WG286864-04	Matrix Spike	5/50	1	L08100849-01	11/04/08 18:35
78	P2.110408.184221	WG286864-05	Matrix Spike Duplica	5/50	1	L08100849-01	11/04/08 18:42
79	P2.110408.184843	L08100848-01	INST-WS-103008	5/50	1		11/04/08 18:48
80	P2.110408.185501	WG286891-01	Post Digestion Spike		1	L08100848-01	11/04/08 18:55
81	P2.110408.190123	WG286891-02	Serial Dilution		5	L08100848-01	11/04/08 19:01
82	P2.110408.190746	WG286969-24	Interference Check		1		11/04/08 19:07
83	P2.110408.191307	WG286969-25	Interference Check		1		11/04/08 19:13
84	P2.110408.191829	WG286969-26	CCV		1		11/04/08 19:18
85	P2.110408.192449	WG286969-27	CCB		1		11/04/08 19:24
86	P2.110408.193104	L08100849-02	GC081527	5/50	1		11/04/08 19:31
87	P2.110408.193727	L08100880-01	WIA-PRB-WC	5/50	1		11/04/08 19:37
88	P2.110408.194352	L08100880-02	WIA-MWSS-WC	5/50	1		11/04/08 19:43
89	P2.110408.195010	L08100880-03	433-MW6I-WC	5/50	1		11/04/08 19:50
90	P2.110408.195634	L08100880-04	W1A-MW58C-WC	5/50	1		11/04/08 19:56
91	P2.110408.200259	L08110002-01	T.O. BURNER REFRACTOR	5/50	1		11/04/08 20:02
92	P2.110408.200916	L08110003-01	POWDURA SD BURGUND	5/50	1		11/04/08 20:09
93	P2.110408.201540	L08110003-02	POWDURA SD FOREST GR	5/50	1		11/04/08 20:15
94	P2.110408.202204	L08110003-03	POWDURA SD BARN RED	5/50	1		11/04/08 20:22
95	P2.110408.202822	L08110003-04	POWDURA SD REGAL BLU	5/50	1		11/04/08 20:28
96	P2.110408.203443	WG286969-28	CCV		1		11/04/08 20:34
97	P2.110408.204101	WG286969-29	CCB		1		11/04/08 20:41
98	P2.110408.204716	L08110003-05	POWDURA FP SURREY BE	5/50	1		11/04/08 20:47
99	P2.110408.205339	WG286742-02	Method/Prep Blank	50/50	1		11/04/08 20:53
100	P2.110408.210000	WG286742-03	Laboratory Control S	50/50	1		11/04/08 21:00
101	P2.110408.210614	WG286969-30	CCV		1		11/04/08 21:06
102	P2.110408.211319	WG286969-31	CCB		1		11/04/08 21:13
103	P2.110408.211940	L08100895-01	0810-349-1	50/50	1	WG286766-04	11/04/08 21:19
104	P2.110408.212603	L08100872-01	LM1	50/50	1	WG286609-04	11/04/08 21:26
105	P2.110408.213125	WG286742-01	Reference Sample		10	L08100874-01	11/04/08 21:31
106	P2.110408.213746	WG286742-04	Matrix Spike	50/50	10	L08100874-01	11/04/08 21:37
107	P2.110408.214402	WG286742-05	Matrix Spike Duplica	50/50	10	L08100874-01	11/04/08 21:44
108	P2.110408.215022	L08100874-02	DMR4	50/50	10		11/04/08 21:50
109	P2.110408.215643	WG286826-01	Post Digestion Spike		10	L08100874-02	11/04/08 21:56
110	P2.110408.220259	WG286826-02	Serial Dilution		50	L08100874-02	11/04/08 22:02
111	P2.110408.220919	L08100874-03	UMR3	50/50	10		11/04/08 22:09

Page: 3 Approved: November 05, 2008

Maren Berry

Microbac®

Microbac Laboratories Inc.

Instrument Run Log

Instrument: PE-ICP2 Dataset: 110408H.CSV
Analyst1: JYH Analyst2: N/A
Method: 6010B SOP: ME600E Rev: 8
Maintenance Log ID: 26449

Calibration Std: STD29127 ICV/CCV Std: STD29409 Post Spike: STD27612
ICSA: STD29568 ICSAB: STD29411

Workgroups: 286819,286238,286711,286362,286891,286826

Comments:

Seq.	File ID	Sample	ID	Prep	Dil	Reference	Date/Time
112	P2.110408.221540	L08100874-04	UMR3	50/50	10		11/04/08 22:15
113	P2.110408.222155	WG286969-32	CCV		1		11/04/08 22:21
114	P2.110408.222814	WG286969-33	CCB		1		11/04/08 22:28
115	P2.110408.223524	L08100874-05	DPSR2	50/50	10		11/04/08 22:35
116	P2.110408.224139	L08100874-06	DPSR2	50/50	10		11/04/08 22:41
117	P2.110408.224759	L08100874-07	UPSR1	50/50	10		11/04/08 22:47
118	P2.110408.225420	L08100874-08	UPSR1	50/50	10		11/04/08 22:54
119	P2.110408.230035	L08100876-02	MW \#1	50/50	1		11/04/08 23:00
120	P2.110408.230655	L08100876-04	MW \#2	50/50	1		11/04/08 23:06
121	P2.110408.231320	L08100876-06	MW \#3	50/50	1		11/04/08 23:13
122	P2.110408.231936	L08100876-08	DUP	50/50	1		11/04/08 23:19
123	P2.110408.232600	L08100876-10	FIELD BLANK	50/50	1		11/04/08 23:26
124	P2.110408.233221	L08100891-01	LM3	50/50	1	WG286802-04	11/04/08 23:32
125	P2.110408.233741	WG286969-34	CCV		1		11/04/08 23:37
126	P2.110408.234405	WG286969-35	CCB		1		11/04/08 23:44

Page: 4 Approved: November 05, 2008

Microbac

Checklist ID: 33301
00077535

Microbac Laboratories Inc.

Data Checklist

Date: 02-NOV-2008
Analyst: ED
Analyst: NA
Method: 6010B
Instrument: PE-ICP2
Curve Workgroup: WG286797
Runlog ID: 25044
Analytical Workgroups: 285641,286710,286258,286464,286711,286588,286255,286256,

286463	
Calibration/Linearity	X
ICV/CCV	X
ICB/CCB	X
ICSA/ICSAB	X
CRI	
Blank/LCS	X
MS/MSD	X
Post Spike/Serial Dilution	X
Upload Results	X
Data Qualifiers	
Generate PDF Instrument Data	X
Sign/Annotate PDF Data	X
Upload Curve Data	X
Workgroup Forms	X
Case Narrative	X
Client Forms	X
Level X	
Level 3	10-0867,0715
Level 4	10-0573,0854,0858,0808,0827,0732
	0736,0746
Check for compliance with method and project specific requirements	X
Check the completeness of reported information	X
Check the information for the report narrative	X
Primary Reviewer	ED
Secondary Reviewer	MMB
Comments	

Primary Reviewer:
04-NOV-2008
Emily Decker

Secondary Reviewer:
04-NOV-2008
Maren Berry

CHECKLIST1 - Modified 03/05/2008
Generated: NOV-04-2008 14:23:55

Microbac®

Checklist ID: 33330
00077536

Microbac Laboratories Inc.

Data Checklist

Date: 04-NOV-2008
Analyst: JYH
Analyst: NA
Method: 6010
Instrument: PE-ICP2
Curve Workgroup: 286969
Runlog ID: 25068
Analytical Workgroups: 286819,286238,286711,286362,286891,286826

Calibration/Linearity	X
ICV/CCV	X
ICB/CCB	X
ICSA/ICSAB	X
CRI	
Blank/LCS	X
MS/MSD	X
Post Spike/Serial Dilution	X
Upload Results	X
Data Qualifiers	
Generate PDF Instrument Data	X
Sign/Annotate PDF Data	X
Upload Curve Data	X
Workgroup Forms	X
Case Narrative	828,866,881,892,893,894,896,898,718
	867,848,849,880,002,003,872,874,876
	891,895
Client Forms	X
Level X	
Level 3	718,867
Level 4	828,866,893,894,896,898,848,880,
Check for compliance with method and project specific requirements	X
Check the completeness of reported information	X
Check the information for the report narrative	X
Primary Reviewer	JYH
Secondary Reviewer	MMB
Comments	

Primary Reviewer:
05-NOV-2008

Secondary Reviewer:
05-NOV-2008

CHECKLIST1 - Modified 03/05/2008
Generated: NOV-05-2008 17:13:11

Microbac®

Microbac Laboratories Inc.

HOLDING TIMES
EQUIVALENT TO AFCEE FORM 9

00077537

Analytical Method: 6010B

AAB#: WG286711

Login Number: L08100867

Client ID	Date Collected	Date Received	Date Extracted	Max Hold Time Ext.	Time Held Ext.	Date Analyzed	Max Hold Time Anal	Time Held Anal.	Q
LHSMW15-102708	10/27/08	10/30/08	10/31/08	180	3.71	11/02/08	180	2.62	
46WW04-102708	10/27/08	10/30/08	10/31/08	180	3.68	11/04/08	180	4.44	
46WW04-102708	10/27/08	10/30/08	10/31/08	180	3.68	11/02/08	180	2.63	
LHSMW23-102808	10/28/08	10/30/08	10/31/08	180	2.80	11/04/08	180	4.43	
LHSMW11-102708	10/27/08	10/30/08	10/31/08	180	3.77	11/04/08	180	4.43	
LHSMW11-102708	10/27/08	10/30/08	10/31/08	180	3.77	11/02/08	180	2.62	
LHSMW15-102708	10/27/08	10/30/08	10/31/08	180	3.71	11/04/08	180	4.43	
LHSMW23-102808	10/28/08	10/30/08	10/31/08	180	2.80	11/02/08	180	2.62	

* EXT = SEE PROJECT QAPP REQUIREMENTS
*ANAL = SEE PROJECT QAPP REQUIREMENTS

HOLD_TIMES - Modified 03/06/2008
PDF File ID: 1239585
Report generated 11/05/2008 09:34

Microbac®

Microbac Laboratories Inc.

00077538

METHOD BLANK SUMMARY

Login Number: L08100867
Blank File ID: P2.110208.193058
Prep Date: 10/31/08 06:49
Analyzed Date: 11/02/08 19:30
Analyst: ED

Work Group: WG286711
Blank Sample ID: WG286554-02
Instrument ID: PE-ICP2
Method: 6010B

This Method Blank Applies To The Following Samples:

Client ID	Lab Sample ID	Lab File ID	Time Analyzed	TAG
LCS	WG286554-03	P2.110208.193719	11/02/08 19:37	01
LHSMW23-102808	L08100867-05	P2.110208.213619	11/02/08 21:36	01
LHSMW11-102708	L08100867-07	P2.110208.214246	11/02/08 21:42	01
LHSMW15-102708	L08100867-09	P2.110208.214905	11/02/08 21:49	01
46WW04-102708	L08100867-10	P2.110208.215534	11/02/08 21:55	01
LHSMW23-102808	L08100867-05	P2.110408.170109	11/04/08 17:01	DL01
LHSMW11-102708	L08100867-07	P2.110408.170729	11/04/08 17:07	DL01
LHSMW15-102708	L08100867-09	P2.110408.171352	11/04/08 17:13	DL01
46WW04-102708	L08100867-10	P2.110408.172013	11/04/08 17:20	DL01

Report Name: BLANK_SUMMARY
PDF File ID: 1239586
Report generated 11/05/2008 09:35

Microbac Laboratories Inc.

METHOD BLANK REPORT

00077539

Login Number: L08100867 Prep Date: 10/31/08 06:49 Sample ID: WG286554-02
Instrument ID: PE-ICP2 Run Date: 11/02/08 19:30 Prep Method: 3005A
File ID: P2.110208.193058 Analyst: ED Method: 6010B
Workgroup (AAB#): WG286711 Matrix: Water Units: mg/L
Contract #: DACA56-94-D-0020 Cal ID: PE-ICP-02-NOV-08

Analytes	SDL	PQL	Concentration	Dilution	Qualifier
Aluminum, Total	0.0500	0.100	0.0500	1	U
Beryllium, Total	0.000500	0.00200	0.000500	1	U
Calcium, Total	0.100	0.200	0.100	1	U
Cobalt, Total	0.00250	0.00500	0.00250	1	U
Iron, Total	0.0250	0.100	0.0250	1	U
Magnesium, Total	0.250	0.500	0.250	1	U
Potassium, Total	0.250	1.00	0.250	1	U
Sodium, Total	0.250	0.500	0.250	1	U
Vanadium, Total	0.00500	0.0100	0.00500	1	U
Zinc, Total	0.00500	0.0200	0.00500	1	U

SDL Method Detection Limit
PQL Reporting/Practical Quantitation Limit
ND Analyte Not detected at or above reporting limit
* |Analyte concentration| > RL

Report Name: BLANK
PDF ID: 1239587
05-NOV-2008 09:34

Microbac®

Microbac Laboratories Inc.
LABORATORY CONTROL SAMPLE (LCS)

00077540

Login Number: L08100867 Run Date: 11/02/2008 Sample ID: WG286554-03
Instrument ID: PE-ICP2 Run Time: 19:37 Prep Method: 3005A
File ID: P2.110208.193719 Analyst: ED Method: 6010B
Workgroup (AAB#): WG286711 Matrix: Water Units: mg/L
QC Key: STD Lot#: STD27613 Cal ID: PE-ICP-02-NOV-08

Analytes	Expected	Found	% Rec	LCS Limits	Q
Aluminum, Total	5.00	5.05	101	85 - 115	
Beryllium, Total	0.0250	0.0249	99.5	85 - 115	
Calcium, Total	5.00	5.13	103	85 - 115	
Cobalt, Total	0.100	0.0994	99.4	85 - 115	
Iron, Total	2.00	2.02	101	85 - 115	
Magnesium, Total	5.00	5.07	101	85 - 115	
Potassium, Total	25.0	25.5	102	85 - 115	
Sodium, Total	25.0	25.8	103	85 - 115	
Vanadium, Total	0.500	0.501	100	85 - 115	
Zinc, Total	0.500	0.502	100	85 - 115	

LCS - Modified 03/06/2008
PDF File ID: 1239588
Report generated: 11/05/2008 09:34

Microbac®

Microbac Laboratories Inc.
MATRIX SPIKE AND MATRIX SPIKE DUP (MS/MSD)

00077541

Loginnum: L08100867 Cal ID: PE-ICP2- Worknum: WG286711
Instrument ID: PE-ICP2 Contract #: DACA56-94-D-0020 Method: 6010B
Parent ID: WG286554-01 File ID: P2.110208.202035 Dil: 1 Matrix: WATER
Sample ID: WG286554-04 MS File ID: P2.110208.203930 Dil: 1 Units: mg/L
Sample ID: WG286554-05 MSD File ID: P2.110208.204553 Dil: 1

Analyte	Parent	MS Spiked	MS Found	MS %Rec	MSD Spiked	MSD Found	MSD %Rec	%RPD	%Rec Limits	RPD Limit	Q
Aluminum, Total	0.117	5.00	5.26	103	5.00	5.24	103	0.251	80 - 120	20	
Beryllium, Total	ND	0.0250	0.0254	102	0.0250	0.0249	99.7	2.01	80 - 120	20	
Calcium, Total	1.86	5.00	7.09	104	5.00	7.15	106	0.861	80 - 120	20	
Cobalt, Total	ND	0.100	0.103	103	0.100	0.101	101	1.19	80 - 120	20	
Iron, Total	0.208	2.00	2.25	102	2.00	2.27	103	0.572	80 - 120	20	
Magnesium, Total	0.952	5.00	6.09	103	5.00	6.13	104	0.666	80 - 120	20	
Potassium, Total	0.664	25.0	26.5	103	25.0	26.5	103	0.0139	80 - 120	20	
Sodium, Total	1.78	25.0	28.0	105	25.0	28.1	105	0.216	80 - 120	20	
Vanadium, Total	ND	0.500	0.514	103	0.500	0.499	99.8	2.96	80 - 120	20	
Zinc, Total	0.00586	0.500	0.519	103	0.500	0.513	101	1.27	80 - 120	20	

* FAILS %REC LIMIT

FAILS RPD LIMIT

NOTE: This is an internal quality control sample.

WG_MS_MSD_DRYWT - Modified 03/07/2008
PDF File ID: 1239589
Report generated 11/05/2008 09:34

Microbac®

Microbac Laboratories Inc.
Serial Dilution Report

Login: L08100867 **Worknum:** WG286711
Instrument: PE-ICP2 **Method:** 6010B
Serial Dil: WG286711-02 **File ID:** P2.110208.203311 **Dil:** 5 **Units:** mg/L
Sample: L08100862-02 **File ID:** P2.110208.202035 **Dil:** 1

Analyte	Sample	Qual	Serial Dil	Qual	% Diff	Q
Aluminum	.117	X	ND	U		
Beryllium	ND	U	ND	U		
Calcium	1.86	X	2.205	X	18.50	
Cobalt	ND	U	ND	U		
Iron	.208	X	.251	F	20.70	
Magnesium	.952	X	ND	U		
Potassium	.664	F	ND	U		
Sodium	1.78	X	1.76	F	1.12	
Vanadium	ND	U	ND	U		
Zinc	.00586	F	ND	U		

U = Result is below MDL.
F = Result is greater than or equal to MDL and less than the RL.
X = Result is greater than or equal to RL and less than 50 times the MDL.
E = %D exceeds control limit of 10% and initial sample result is greater than or equal to 50 times the MDL.

SERIAL_DIL - Modified 09/22/2008
PDF File ID: 1239583
11/05/2008 09:34

Microbac®

Microbac Laboratories Inc.
POST SPIKE REPORT

00077543

Sample Login ID: L08100867 **Worknum:** WG286711
Instrument ID: PE-ICP2 **Method:** 6010B
Post Spike ID: WG286711-01 **File ID:** P2.110208.202649 **Dil:** 1 **Units:** mg/L
Sample ID: L08100862-02 **File ID:** P2.110208.202035 **Dil:** 1 **Matrix:** Water

Analyte	Post Spike Result	C	Sample Result	C	Spike Added(SA)	% R	Control Limit %R	Q
ALUMINUM	5.03		0.117		5	98.5	75 - 125	
BERYLLIUM	0.0250		0	U	.025	100.1	75 - 125	
CALCIUM	6.86		1.86		5	103.7	75 - 125	
COBALT	0.0998		0	U	.1	99.8	75 - 125	
IRON	2.18		0.208		2	99.6	75 - 125	
MAGNESIUM	5.87		0.952		5	100.3	75 - 125	
POTASSIUM	25.6		0.664	F	25	100.0	75 - 125	
SODIUM	27.0		1.78		25	101.4	75 - 125	
VANADIUM	0.504		0	U	.5	100.9	75 - 125	
ZINC	0.506		0.00586	F	.5	100.2	75 - 125	

N = % Recovery exceeds control limits
F = Result is between MDL and RL
U = Sample result is below MDL. A value of zero is used in the calculation

POST_SPIKE - Modified 03/06/2008
PDF File ID: 1239584
Report generated: 11/05/2008 09:34

Microbac Laboratories Inc.
Initial Calibration Summary

00077544

Login:	L08100867	Workgroup (AAB#):	WG286711
Analytical Method:	6010B	Instrument ID:	PE-ICP2
ICAL Worknum:	WG286797	Initial Calibration Date:	02-NOV-2008 15:41

	WG286797-01		WG286797-02		WG286797-03		WG286797-04		WG286797-05			
	Conc	INT	Conc	INT	Conc	INT	Conc	INT	Conc	INT	R	Q
ALUMINUM	0	-24.1	.1	555	.2	1300	10	61800	20	126000	.999968	
BERYLLIUM	0	-863	.0005	183	.001	368	.05	17400	.1	35300	.999976	
CALCIUM	0	-72.6	.1	7.65	.2	18.1	10	968	20	2020	.999804	
COBALT	0	-49.6	.002	37.4	.004	68.9	.1	3880	.4	7710	.999995	
IRON	0	4.06	.04	34.3	.08	70.6	4	3640	8	7400	.999965	
MAGNESIUM	0	11.0	.1	57.1	.2	112	10	5540	20	11300	.999968	
POTASSIUM	0	-534	.5	1160	1	2290	50	110000	100	222000	1	
SODIUM	0	89.7	.5	1040	1	2050	50	97500	100	196000	1	
VANADIUM	0	4680	.01	721	.02	1480	1	74700	2	151000	.99999	
ZINC	0	4.02	.01	74.2	.02	141	1	7280	2	14600	1	

INT = Instrument intensity
R = Coefficient of correlation
Q = Data Qualifier
*** = Out of Compliance; R < 0.995**

INT_CAL_ICP - Modified 03/06/2008
PDF File ID: 1239592
Report generated: 05-NOV-2008 09:34

Microbac®

Microbac Laboratories Inc.
Initial Calibration Summary

00077545

Login:	L08100867	Workgroup (AAB#):	WG286711
Analytical Method:	6010B	Instrument ID:	PE-ICP2
ICAL Worknum:	WG286969	Initial Calibration Date:	04-NOV-2008 11:03

	WG286969-01		WG286969-02		WG286969-03		WG286969-04		WG286969-05			
	Conc	INT	Conc	INT	Conc	INT	Conc	INT	Conc	INT	R	Q
ALUMINUM	0	-39.6	.1	650	.2	1300	10	64800	20	129000	1	
BERYLLIUM	0	-863	.0005	183	.001	367	.05	17700	.1	36300	.999933	
CALCIUM	0	-68.6	.1	4.78	.2	11.8	10	996	20	2070	.999834	
COBALT	0	-53.5	.002	40.0	.004	76.4	.1	3910	.4	7940	.999975	
IRON	0	1.25	.04	36.2	.08	70.6	4	3690	8	7200	.999927	
MAGNESIUM	0	11.3	.1	56.5	.2	111	10	5720	20	11100	.999889	
POTASSIUM	0	-523	.5	1080	1	2240	50	111000	100	222000	1	
SODIUM	0	140	.5	1010	1	2030	50	100000	100	199000	1	
VANADIUM	0	4520	.01	814	.02	1670	1	76200	2	156000	.999947	
ZINC	0	-2.19	.01	75.9	.02	144	1	7440	2	15000	.999995	

INT = Instrument intensity
R = Coefficient of correlation
Q = Data Qualifier
*** = Out of Compliance; R < 0.995**

INT_CAL_ICP - Modified 03/06/2008
PDF File ID: 1239592
Report generated: 05-NOV-2008 09:34

Microbac®

Microbac Laboratories Inc.
INITIAL CALIBRATION BLANK (ICB)

00077546

Login Number: L08100867
Run Date: 11/02/2008
Sample ID: WG286797-07
Instrument ID: PE-ICP2
Run Time: 15:53
Method: 6010
File ID: P2.110208.155349
Analyst: ED
Units: mg/L
Workgroup (AAB#): WG286711
Cal ID: PE-ICP2 - 02-NOV-08
Matrix: WATER

Analytes	MDL	RDL	Concentration	Qualifier
ALUMINUM	.05	.1	.05	U
BERYLLIUM	.0005	.002	.0005	U
CALCIUM	.1	.2	.1	U
COBALT	.0025	.005	.0025	U
IRON	.025	.1	.025	U
MAGNESIUM	.25	.5	.25	U
POTASSIUM	.25	1	.25	U
SODIUM	.25	.5	.25	U
VANADIUM	.005	.01	.005	U
ZINC	.005	.02	.005	U

ICB - Modified 03/06/2008
PDF File ID: 1239594
Report generated 11/05/2008 09:35

Microbac

Microbac Laboratories Inc.
INITIAL CALIBRATION BLANK (ICB)

00077547

Login Number: L08100867
Run Date: 11/04/2008
Sample ID: WG286969-07
Instrument ID: PE-ICP2
Run Time: 11:15
Method: 6010
File ID: P2.110408.111509
Analyst: JYH
Units: mg/L
Workgroup (AAB#): WG286711
Cal ID: PE-ICP2 - 04-NOV-08
Matrix: WATER

Analytes	MDL	RDL	Concentration	Qualifier
ALUMINUM	.05	.1	.05	U
BERYLLIUM	.0005	.002	.0005	U
CALCIUM	.1	.2	.1	U
COBALT	.0025	.005	.0025	U
IRON	.025	.1	.025	U
MAGNESIUM	.25	.5	.25	U
POTASSIUM	.25	1	.25	U
SODIUM	.25	.5	.25	U
VANADIUM	.005	.01	.005	U
ZINC	.005	.02	.005	U

ICB - Modified 03/06/2008
PDF File ID: 1239594
Report generated 11/05/2008 09:35

Microbac

Microbac Laboratories Inc.

CONTINUING CALIBRATION BLANK (CCB)

00077548

Login Number: L08100867 Run Date: 11/02/2008 Sample ID: WG286797-11

Instrument ID: PE-ICP2 Run Time: 16:17 Method: 6010B

File ID: P2.110208.161705 Analyst: ED Units: mg/L

Workgroup (AAB#): WG286711 Cal ID: PE-ICP - 02-NOV-08

Matrix: WATER

Analytes	MDL	RDL	Concentration	Qualifier
Aluminum	0.0500	0.100	0.0500	U
Beryllium	0.000500	0.00200	0.000500	U
Calcium	0.100	0.200	0.100	U
Cobalt	0.00250	0.00500	0.00250	U
Iron	0.0250	0.100	0.0250	U
Magnesium	0.250	0.500	0.250	U
Potassium	0.250	1.00	0.250	U
Sodium	0.250	0.500	0.250	U
Vanadium	0.00500	0.0100	0.00500	U
Zinc	0.00500	0.0200	0.00500	U

U = Result is less than MDL.
F = Result is between MDL and RL.
* = Result is above RL.

CCB - Modified 03/05/2008
PDF File ID: 1239597
Report generated 11/05/2008 09:35

Microbac®

Microbac Laboratories Inc.
CONTINUING CALIBRATION BLANK (CCB)

00077549

Login Number: L08100867 Run Date: 11/02/2008 Sample ID: WG286797-15
Instrument ID: PE-ICP2 Run Time: 18:59 Method: 6010B
File ID: P2.110208.185928 Analyst: ED Units: mg/L
Workgroup (AAB#): WG286711 Cal ID: PE-ICP - 02-NOV-08
Matrix: WATER

Analytes	MDL	RDL	Concentration	Qualifier
Aluminum	0.0500	0.100	0.0500	U
Beryllium	0.000500	0.00200	0.000500	U
Calcium	0.100	0.200	0.100	U
Cobalt	0.00250	0.00500	0.00250	U
Iron	0.0250	0.100	0.0250	U
Magnesium	0.250	0.500	0.250	U
Potassium	0.250	1.00	0.250	U
Sodium	0.250	0.500	0.250	U
Vanadium	0.00500	0.0100	0.00500	U
Zinc	0.00500	0.0200	0.00500	U

U = Result is less than MDL.
F = Result is between MDL and RL.
* = Result is above RL.

CCB - Modified 03/05/2008
PDF File ID: 1239597
Report generated 11/05/2008 09:35

Microbac®

Microbac Laboratories Inc.
CONTINUING CALIBRATION BLANK (CCB)

00077550

Login Number: L08100867 Run Date: 11/02/2008 Sample ID: WG286797-17
Instrument ID: PE-ICP2 Run Time: 20:14 Method: 6010B
File ID: P2.110208.201418 Analyst: ED Units: mg/L
Workgroup (AAB#): WG286711 Cal ID: PE-ICP - 02-NOV-08
Matrix: WATER

Analytes	MDL	RDL	Concentration	Qualifier
Aluminum	0.0500	0.100	0.0500	U
Beryllium	0.000500	0.00200	0.000500	U
Calcium	0.100	0.200	0.100	U
Cobalt	0.00250	0.00500	0.00250	U
Iron	0.0250	0.100	0.0250	U
Magnesium	0.250	0.500	0.250	U
Potassium	0.250	1.00	0.250	U
Sodium	0.250	0.500	0.250	U
Vanadium	0.00500	0.0100	0.00500	U
Zinc	0.00500	0.0200	0.00500	U

U = Result is less than MDL.
F = Result is between MDL and RL.
* = Result is above RL.

CCB - Modified 03/05/2008
PDF File ID: 1239597
Report generated 11/05/2008 09:35

Microbac®

Microbac Laboratories Inc.
CONTINUING CALIBRATION BLANK (CCB)

00077551

Login Number: L08100867 Run Date: 11/02/2008 Sample ID: WG286797-19
Instrument ID: PE-ICP2 Run Time: 21:30 Method: 6010B
File ID: P2.110208.213003 Analyst: ED Units: mg/L
Workgroup (AAB#): WG286711 Cal ID: PE-ICP - 02-NOV-08
Matrix: WATER

Analytes	MDL	RDL	Concentration	Qualifier
Aluminum	0.0500	0.100	0.0500	U
Beryllium	0.000500	0.00200	0.000500	U
Calcium	0.100	0.200	0.100	U
Cobalt	0.00250	0.00500	0.00250	U
Iron	0.0250	0.100	0.0250	U
Magnesium	0.250	0.500	0.250	U
Potassium	0.250	1.00	0.250	U
Sodium	0.250	0.500	0.250	U
Vanadium	0.00500	0.0100	0.00500	U
Zinc	0.00500	0.0200	0.00500	U

U = Result is less than MDL.
F = Result is between MDL and RL.
* = Result is above RL.

CCB - Modified 03/05/2008
PDF File ID: 1239597
Report generated 11/05/2008 09:35

Microbac®

Microbac Laboratories Inc.
CONTINUING CALIBRATION BLANK (CCB)

00077552

Login Number: L08100867 Run Date: 11/02/2008 Sample ID: WG286797-21
Instrument ID: PE-ICP2 Run Time: 22:46 Method: 6010B
File ID: P2.110208.224628 Analyst: ED Units: mg/L
Workgroup (AAB#): WG286711 Cal ID: PE-ICP - 02-NOV-08
Matrix: WATER

Analytes	MDL	RDL	Concentration	Qualifier
Aluminum	0.0500	0.100	0.0500	U
Beryllium	0.000500	0.00200	0.000500	U
Calcium	0.100	0.200	0.100	U
Cobalt	0.00250	0.00500	0.00250	U
Iron	0.0250	0.100	0.0250	U
Magnesium	0.250	0.500	0.250	U
Potassium	0.250	1.00	0.250	U
Sodium	0.250	0.500	0.250	U
Vanadium	0.00500	0.0100	0.00500	U
Zinc	0.00500	0.0200	0.00500	U

U = Result is less than MDL.
F = Result is between MDL and RL.
* = Result is above RL.

CCB - Modified 03/05/2008
PDF File ID: 1239597
Report generated 11/05/2008 09:35

Microbac®

Microbac Laboratories Inc.
CONTINUING CALIBRATION BLANK (CCB)

00077553

Login Number: L08100867 Run Date: 11/03/2008 Sample ID: WG286797-32
Instrument ID: PE-ICP2 Run Time: 04:23 Method: 6010B
File ID: P2.110308.042324 Analyst: ED Units: mg/L
Workgroup (AAB#): WG286711 Cal ID: PE-ICP - 02-NOV-08
Matrix: WATER

Analytes	MDL	RDL	Concentration	Qualifier
Aluminum	0.0500	0.100	0.0500	U
Beryllium	0.000500	0.00200	0.000500	U
Calcium	0.100	0.200	0.102	F
Cobalt	0.00250	0.00500	0.00250	U
Iron	0.0250	0.100	0.0250	U
Magnesium	0.250	0.500	0.250	U
Potassium	0.250	1.00	0.250	U
Sodium	0.250	0.500	0.250	U
Vanadium	0.00500	0.0100	0.00500	U
Zinc	0.00500	0.0200	0.00500	U

U = Result is less than MDL.
F = Result is between MDL and RL.
* = Result is above RL.

CCB - Modified 03/05/2008
PDF File ID: 1239597
Report generated 11/05/2008 09:35

Microbac®

Microbac Laboratories Inc.

CONTINUING CALIBRATION BLANK (CCB)

00077554

Login Number: L08100867 Run Date: 11/03/2008 Sample ID: WG286797-36

Instrument ID: PE-ICP2 Run Time: 04:46 Method: 6010B

File ID: P2.110308.044637 Analyst: ED Units: mg/L

Workgroup (AAB#): WG286711 Cal ID: PE-ICP - 02-NOV-08

Matrix: WATER

Analytes	MDL	RDL	Concentration	Qualifier
Aluminum	0.0500	0.100	0.0500	U
Beryllium	0.000500	0.00200	0.000500	U
Calcium	0.100	0.200	0.100	U
Cobalt	0.00250	0.00500	0.00250	U
Iron	0.0250	0.100	0.0250	U
Magnesium	0.250	0.500	0.250	U
Potassium	0.250	1.00	0.250	U
Sodium	0.250	0.500	0.250	U
Vanadium	0.00500	0.0100	0.00500	U
Zinc	0.00500	0.0200	0.00500	U

U = Result is less than MDL.
F = Result is between MDL and RL.
* = Result is above RL.

CCB - Modified 03/05/2008
PDF File ID: 1239597
Report generated 11/05/2008 09:35

Microbac®

Microbac Laboratories Inc.
CONTINUING CALIBRATION BLANK (CCB)

00077555

Login Number: L08100867 Run Date: 11/04/2008 Sample ID: WG286969-11
Instrument ID: PE-ICP2 Run Time: 11:38 Method: 6010B
File ID: P2.110408.113831 Analyst: JYH Units: mg/L
Workgroup (AAB#): WG286711 Cal ID: PE-ICP - 04-NOV-08
Matrix: WATER

Analytes	MDL	RDL	Concentration	Qualifier
Aluminum	0.0500	0.100	0.0500	U
Beryllium	0.000500	0.00200	0.000500	U
Calcium	0.100	0.200	0.100	U
Cobalt	0.00250	0.00500	0.00250	U
Iron	0.0250	0.100	0.0250	U
Magnesium	0.250	0.500	0.250	U
Potassium	0.250	1.00	0.250	U
Sodium	0.250	0.500	0.250	U
Vanadium	0.00500	0.0100	0.00500	U
Zinc	0.00500	0.0200	0.00500	U

U = Result is less than MDL.
F = Result is between MDL and RL.
* = Result is above RL.

CCB - Modified 03/05/2008
PDF File ID: 1239597
Report generated 11/05/2008 09:35

Microbac®

Microbac Laboratories Inc.

CONTINUING CALIBRATION BLANK (CCB)

00077556

Login Number: L08100867 Run Date: 11/04/2008 Sample ID: WG286969-19

Instrument ID: PE-ICP2 Run Time: 16:29 Method: 6010B

File ID: P2.110408.162930 Analyst: JYH Units: mg/L

Workgroup (AAB#): WG286711 Cal ID: PE-ICP - 04-NOV-08

Matrix: WATER

Analytes	MDL	RDL	Concentration	Qualifier
Aluminum	0.0500	0.100	0.0500	U
Beryllium	0.000500	0.00200	0.000500	U
Calcium	0.100	0.200	0.100	U
Cobalt	0.00250	0.00500	0.00250	U
Iron	0.0250	0.100	0.0250	U
Magnesium	0.250	0.500	0.250	U
Potassium	0.250	1.00	0.250	U
Sodium	0.250	0.500	0.250	U
Vanadium	0.00500	0.0100	0.00500	U
Zinc	0.00500	0.0200	0.00500	U

U = Result is less than MDL.
F = Result is between MDL and RL.
* = Result is above RL.

CCB - Modified 03/05/2008
PDF File ID: 1239597
Report generated 11/05/2008 09:35

Microbac®

Microbac Laboratories Inc.
CONTINUING CALIBRATION BLANK (CCB)

00077557

Login Number: L08100867 Run Date: 11/04/2008 Sample ID: WG286969-21
Instrument ID: PE-ICP2 Run Time: 17:45 Method: 6010B
File ID: P2.110408.174527 Analyst: JYH Units: mg/L
Workgroup (AAB#): WG286711 Cal ID: PE-ICP - 04-NOV-08
Matrix: WATER

Analytes	MDL	RDL	Concentration	Qualifier
Aluminum	0.0500	0.100	0.0500	U
Beryllium	0.000500	0.00200	0.000500	U
Calcium	0.100	0.200	0.100	U
Cobalt	0.00250	0.00500	0.00250	U
Iron	0.0250	0.100	0.0250	U
Magnesium	0.250	0.500	0.250	U
Potassium	0.250	1.00	0.250	U
Sodium	0.250	0.500	0.250	U
Vanadium	0.00500	0.0100	0.00500	U
Zinc	0.00500	0.0200	0.00500	U

U = Result is less than MDL.
F = Result is between MDL and RL.
* = Result is above RL.

CCB - Modified 03/05/2008
PDF File ID: 1239597
Report generated 11/05/2008 09:35

Microbac®

Microbac Laboratories Inc.
CONTINUING CALIBRATION BLANK (CCB)

00077558

Login Number: L08100867 Run Date: 11/04/2008 Sample ID: WG286969-23
Instrument ID: PE-ICP2 Run Time: 18:23 Method: 6010B
File ID: P2.110408.182324 Analyst: JYH Units: mg/L
Workgroup (AAB#): WG286711 Cal ID: PE-ICP - 04-NOV-08
Matrix: WATER

Analytes	MDL	RDL	Concentration	Qualifier
Aluminum	0.0500	0.100	0.0500	U
Beryllium	0.000500	0.00200	0.000500	U
Calcium	0.100	0.200	0.100	U
Cobalt	0.00250	0.00500	0.00250	U
Iron	0.0250	0.100	0.0250	U
Magnesium	0.250	0.500	0.250	U
Potassium	0.250	1.00	0.250	U
Sodium	0.250	0.500	0.250	U
Vanadium	0.00500	0.0100	0.00500	U
Zinc	0.00500	0.0200	0.00500	U

U = Result is less than MDL.
F = Result is between MDL and RL.
* = Result is above RL.

CCB - Modified 03/05/2008
PDF File ID: 1239597
Report generated 11/05/2008 09:35

Microbac®

Microbac Laboratories Inc.
CONTINUING CALIBRATION BLANK (CCB)

00077559

Login Number: L08100867
Run Date: 11/04/2008
Sample ID: WG286969-27
Instrument ID: PE-ICP2
Run Time: 19:24
Method: 6010B
File ID: P2.110408.192449
Analyst: JYH
Units: mg/L
Workgroup (AAB#): WG286711
Cal ID: PE-ICP - 04-NOV-08
Matrix: WATER

Analytes	MDL	RDL	Concentration	Qualifier
Aluminum	0.0500	0.100	0.0500	U
Beryllium	0.000500	0.00200	0.000500	U
Calcium	0.100	0.200	0.100	U
Cobalt	0.00250	0.00500	0.00250	U
Iron	0.0250	0.100	0.0250	U
Magnesium	0.250	0.500	0.250	U
Potassium	0.250	1.00	0.250	U
Sodium	0.250	0.500	0.250	U
Vanadium	0.00500	0.0100	0.00500	U
Zinc	0.00500	0.0200	0.00500	U

U = Result is less than MDL.
F = Result is between MDL and RL.
* = Result is above RL.

CCB - Modified 03/05/2008
PDF File ID: 1239597
Report generated 11/05/2008 09:35

Microbac®

Microbac Laboratories Inc.

INITIAL CALIBRATION VERIFICATION (ICV)
(Alternate Source)

00077560

Login Number: L08100867 Run Date: 11/02/2008 Sample ID: WG286797-06
Instrument ID: PE-ICP2 Run Time: 15:47 Method: 6010B
File ID: P2.110208.154729 Analyst: ED Units: mg/L
Workgroup (AAB#): WG286711 Cal ID: PE-ICP - 02-NOV-08
QC Key: STD

Analyte		Expected	Found	%REC	LIMITS	Q
Aluminum		10	9.84	98.4	90 - 110	
Beryllium		.05	0.0484	96.8	90 - 110	
Calcium		10	10.1	101	90 - 110	
Cobalt		.2	0.194	97.1	90 - 110	
Iron		4	3.95	98.7	90 - 110	
Magnesium		10	9.94	99.4	90 - 110	
Potassium		50	49.9	99.9	90 - 110	
Sodium		50	50.2	100	90 - 110	
Vanadium		1	0.969	96.9	90 - 110	
Zinc		1	0.985	98.5	90 - 110	

* Exceeds LIMITS Limit

ICV - Modified 03/06/2008
PDF File ID: 1239593
Report generated 11/05/2008 09:35

Microbac®

Microbac Laboratories Inc.

INITIAL CALIBRATION VERIFICATION (ICV)
(Alternate Source)

00077561

Login Number: L08100867 Run Date: 11/04/2008 Sample ID: WG286969-06
Instrument ID: PE-ICP2 Run Time: 11:08 Method: 6010B
File ID: P2.110408.110848 Analyst: JYH Units: mg/L
Workgroup (AAB#): WG286711 Cal ID: PE-ICP - 04-NOV-08
QC Key: STD

Analyte		Expected	Found	%REC	LIMITS	Q
Aluminum		10	9.92	99.2	90 - 110	
Beryllium		.05	0.0492	98.4	90 - 110	
Calcium		10	10.3	103	90 - 110	
Cobalt		.2	0.198	99.1	90 - 110	
Iron		4	4.05	101	90 - 110	
Magnesium		10	10.3	103	90 - 110	
Potassium		50	49.9	99.8	90 - 110	
Sodium		50	50.0	99.9	90 - 110	
Vanadium		1	0.988	98.8	90 - 110	
Zinc		1	1.00	100	90 - 110	

* Exceeds LIMITS Limit

ICV - Modified 03/06/2008
PDF File ID: 1239593
Report generated 11/05/2008 09:35

Microbac®

Microbac Laboratories Inc.
CONTINUING CALIBRATION VERIFICATION (CCV)

00077562

Login Number: L08100867
Run Date: 11/02/2008
Sample ID: WG286797-10
Instrument ID: PE-ICP2
Run Time: 16:10
Method: 6010B
File ID: P2.110208.161047
Analyst: ED
QC Key: STD
Workgroup (AAB#): WG286711
Cal ID: PE-ICP - 02-NOV-08
Matrix: WATER

Analyte		Expected	Found	UNITS	%REC	LIMITS		Q
Aluminum		10.0	9.73	mg/L	97.3	90 - 110		
Beryllium		0.0500	0.0482	mg/L	96.4	90 - 110		
Calcium		10.0	10.1	mg/L	101	90 - 110		
Cobalt		0.200	0.194	mg/L	97.2	90 - 110		
Iron		4.00	3.90	mg/L	97.5	90 - 110		
Magnesium		10.0	9.85	mg/L	98.5	90 - 110		
Potassium		50.0	49.5	mg/L	98.9	90 - 110		
Sodium		50.0	49.8	mg/L	99.5	90 - 110		
Vanadium		1.00	0.957	mg/L	95.7	90 - 110		
Zinc		1.00	0.989	mg/L	98.9	90 - 110		

* Exceeds LIMITS Criteria

CCV - Modified 03/05/2008
PDF File ID: 1239596
Report generated 11/05/2008 09:35

Microbac®

Microbac Laboratories Inc.
CONTINUING CALIBRATION VERIFICATION (CCV)

00077563

Login Number: L08100867
Run Date: 11/02/2008
Sample ID: WG286797-14
Instrument ID: PE-ICP2
Run Time: 18:53
Method: 6010B
File ID: P2.110208.185309
Analyst: ED
QC Key: STD
Workgroup (AAB#): WG286711
Cal ID: PE-ICP - 02-NOV-08
Matrix: WATER

Analyte		Expected	Found	UNITS	%REC	LIMITS		Q
Aluminum		10.0	9.82	mg/L	98.2	90 - 110		
Beryllium		0.0500	0.0479	mg/L	95.8	90 - 110		
Calcium		10.0	10.1	mg/L	101	90 - 110		
Cobalt		0.200	0.193	mg/L	96.3	90 - 110		
Iron		4.00	3.93	mg/L	98.2	90 - 110		
Magnesium		10.0	9.95	mg/L	99.5	90 - 110		
Potassium		50.0	49.8	mg/L	99.5	90 - 110		
Sodium		50.0	50.1	mg/L	100	90 - 110		
Vanadium		1.00	0.946	mg/L	94.6	90 - 110		
Zinc		1.00	0.978	mg/L	97.8	90 - 110		

* Exceeds LIMITS Criteria

CCV - Modified 03/05/2008
PDF File ID: 1239596
Report generated 11/05/2008 09:35

Microbac®

Microbac Laboratories Inc.
CONTINUING CALIBRATION VERIFICATION (CCV)

00077564

Login Number: L08100867
Run Date: 11/02/2008
Sample ID: WG286797-16
Instrument ID: PE-ICP2
Run Time: 20:07
Method: 6010B
File ID: P2.110208.200759
Analyst: ED
QC Key: STD
Workgroup (AAB#): WG286711
Cal ID: PE-ICP - 02-NOV-08
Matrix: WATER

Analyte		Expected	Found	UNITS	%REC	LIMITS		Q
Aluminum		10.0	9.78	mg/L	97.8	90 - 110		
Beryllium		0.0500	0.0485	mg/L	96.9	90 - 110		
Calcium		10.0	10.2	mg/L	102	90 - 110		
Cobalt		0.200	0.195	mg/L	97.5	90 - 110		
Iron		4.00	3.92	mg/L	97.9	90 - 110		
Magnesium		10.0	9.96	mg/L	99.6	90 - 110		
Potassium		50.0	49.5	mg/L	99.1	90 - 110		
Sodium		50.0	50.1	mg/L	100	90 - 110		
Vanadium		1.00	0.964	mg/L	96.4	90 - 110		
Zinc		1.00	0.987	mg/L	98.7	90 - 110		

* Exceeds LIMITS Criteria

CCV - Modified 03/05/2008
PDF File ID: 1239596
Report generated 11/05/2008 09:35

Microbac®

Microbac Laboratories Inc.
CONTINUING CALIBRATION VERIFICATION (CCV)

00077565

Login Number: L08100867
Run Date: 11/02/2008
Sample ID: WG286797-18
Instrument ID: PE-ICP2
Run Time: 21:23
Method: 6010B
File ID: P2.110208.212343
Analyst: ED
QC Key: STD
Workgroup (AAB#): WG286711
Cal ID: PE-ICP - 02-NOV-08
Matrix: WATER

Analyte		Expected	Found	UNITS	%REC	LIMITS		Q
Aluminum		10.0	9.73	mg/L	97.3	90 - 110		
Beryllium		0.0500	0.0488	mg/L	97.5	90 - 110		
Calcium		10.0	10.2	mg/L	102	90 - 110		
Cobalt		0.200	0.194	mg/L	96.9	90 - 110		
Iron		4.00	3.86	mg/L	96.5	90 - 110		
Magnesium		10.0	9.88	mg/L	98.8	90 - 110		
Potassium		50.0	49.2	mg/L	98.5	90 - 110		
Sodium		50.0	49.9	mg/L	99.8	90 - 110		
Vanadium		1.00	0.971	mg/L	97.1	90 - 110		
Zinc		1.00	0.982	mg/L	98.2	90 - 110		

* Exceeds LIMITS Criteria

CCV - Modified 03/05/2008
PDF File ID: 1239596
Report generated 11/05/2008 09:35

Microbac®

Microbac Laboratories Inc.
CONTINUING CALIBRATION VERIFICATION (CCV)

00077566

Login Number: L08100867
Run Date: 11/02/2008
Sample ID: WG286797-20
Instrument ID: PE-ICP2
Run Time: 22:40
Method: 6010B
File ID: P2.110208.224007
Analyst: ED
QC Key: STD
Workgroup (AAB#): WG286711
Cal ID: PE-ICP - 02-NOV-08
Matrix: WATER

Analyte		Expected	Found	UNITS	%REC	LIMITS		Q
Aluminum		10.0	9.80	mg/L	98.0	90 - 110		
Beryllium		0.0500	0.0491	mg/L	98.1	90 - 110		
Calcium		10.0	10.3	mg/L	103	90 - 110		
Cobalt		0.200	0.195	mg/L	97.4	90 - 110		
Iron		4.00	3.85	mg/L	96.3	90 - 110		
Magnesium		10.0	9.87	mg/L	98.7	90 - 110		
Potassium		50.0	49.4	mg/L	98.8	90 - 110		
Sodium		50.0	50.4	mg/L	101	90 - 110		
Vanadium		1.00	0.969	mg/L	96.9	90 - 110		
Zinc		1.00	0.996	mg/L	99.6	90 - 110		

* Exceeds LIMITS Criteria

CCV - Modified 03/05/2008
PDF File ID: 1239596
Report generated 11/05/2008 09:35

Microbac®

Microbac Laboratories Inc.
CONTINUING CALIBRATION VERIFICATION (CCV)

00077567

Login Number: L08100867
Run Date: 11/03/2008
Sample ID: WG286797-31
Instrument ID: PE-ICP2
Run Time: 04:17
Method: 6010B
File ID: P2.110308.041708
Analyst: ED
QC Key: STD
Workgroup (AAB#): WG286711
Cal ID: PE-ICP - 02-NOV-08
Matrix: WATER

Analyte		Expected	Found	UNITS	%REC	LIMITS		Q
Aluminum		10.0	9.79	mg/L	97.9	90 - 110		
Beryllium		0.0500	0.0477	mg/L	95.4	90 - 110		
Calcium		10.0	9.96	mg/L	99.6	90 - 110		
Cobalt		0.200	0.192	mg/L	95.9	90 - 110		
Iron		4.00	3.90	mg/L	97.5	90 - 110		
Magnesium		10.0	9.99	mg/L	99.9	90 - 110		
Potassium		50.0	49.2	mg/L	98.4	90 - 110		
Sodium		50.0	49.9	mg/L	99.8	90 - 110		
Vanadium		1.00	0.954	mg/L	95.4	90 - 110		
Zinc		1.00	0.972	mg/L	97.2	90 - 110		

* Exceeds LIMITS Criteria

CCV - Modified 03/05/2008
PDF File ID: 1239596
Report generated 11/05/2008 09:35

Microbac®

Microbac Laboratories Inc.
CONTINUING CALIBRATION VERIFICATION (CCV)

00077568

Login Number: L08100867
Run Date: 11/03/2008
Sample ID: WG286797-35
Instrument ID: PE-ICP2
Run Time: 04:40
Method: 6010B
File ID: P2.110308.044023
Analyst: ED
QC Key: STD
Workgroup (AAB#): WG286711
Cal ID: PE-ICP - 02-NOV-08
Matrix: WATER

Analyte		Expected	Found	UNITS	%REC	LIMITS		Q
Aluminum		10.0	9.88	mg/L	98.8	90 - 110		
Beryllium		0.0500	0.0494	mg/L	98.7	90 - 110		
Calcium		10.0	10.2	mg/L	102	90 - 110		
Cobalt		0.200	0.201	mg/L	100	90 - 110		
Iron		4.00	3.95	mg/L	98.8	90 - 110		
Magnesium		10.0	10.1	mg/L	101	90 - 110		
Potassium		50.0	49.6	mg/L	99.3	90 - 110		
Sodium		50.0	50.4	mg/L	101	90 - 110		
Vanadium		1.00	0.989	mg/L	98.9	90 - 110		
Zinc		1.00	1.02	mg/L	102	90 - 110		

* Exceeds LIMITS Criteria

CCV - Modified 03/05/2008
PDF File ID: 1239596
Report generated 11/05/2008 09:35

Microbac®

Microbac Laboratories Inc.
CONTINUING CALIBRATION VERIFICATION (CCV)

00077569

Login Number: L08100867
Run Date: 11/04/2008
Sample ID: WG286969-10
Instrument ID: PE-ICP2
Run Time: 11:32
Method: 6010B
File ID: P2.110408.113212
Analyst: JYH
QC Key: STD
Workgroup (AAB#): WG286711
Cal ID: PE-ICP - 04-NOV-08
Matrix: WATER

Analyte		Expected	Found	UNITS	%REC	LIMITS		Q
Aluminum		10.0	9.75	mg/L	97.5	90 - 110		
Beryllium		0.0500	0.0488	mg/L	97.5	90 - 110		
Calcium		10.0	10.2	mg/L	102	90 - 110		
Cobalt		0.200	0.197	mg/L	98.3	90 - 110		
Iron		4.00	3.95	mg/L	98.8	90 - 110		
Magnesium		10.0	10.0	mg/L	100	90 - 110		
Potassium		50.0	49.1	mg/L	98.2	90 - 110		
Sodium		50.0	49.4	mg/L	98.8	90 - 110		
Vanadium		1.00	0.971	mg/L	97.1	90 - 110		
Zinc		1.00	0.999	mg/L	99.9	90 - 110		

* Exceeds LIMITS Criteria

CCV - Modified 03/05/2008
PDF File ID: 1239596
Report generated 11/05/2008 09:35

Microbac®

Microbac Laboratories Inc.
CONTINUING CALIBRATION VERIFICATION (CCV)

00077570

Login Number: L08100867
Run Date: 11/04/2008
Sample ID: WG286969-18
Instrument ID: PE-ICP2
Run Time: 16:23
Method: 6010B
File ID: P2.110408.162313
Analyst: JYH
QC Key: STD
Workgroup (AAB#): WG286711
Cal ID: PE-ICP - 04-NOV-08
Matrix: WATER

Analyte		Expected	Found	UNITS	%REC	LIMITS		Q
Aluminum		10.0	9.94	mg/L	99.4	90 - 110		
Beryllium		0.0500	0.0508	mg/L	102	90 - 110		
Calcium		10.0	10.6	mg/L	106	90 - 110		
Cobalt		0.200	0.202	mg/L	101	90 - 110		
Iron		4.00	3.99	mg/L	99.8	90 - 110		
Magnesium		10.0	10.2	mg/L	102	90 - 110		
Potassium		50.0	48.7	mg/L	97.5	90 - 110		
Sodium		50.0	51.2	mg/L	102	90 - 110		
Vanadium		1.00	1.01	mg/L	101	90 - 110		
Zinc		1.00	1.03	mg/L	103	90 - 110		

* Exceeds LIMITS Criteria

CCV - Modified 03/05/2008
PDF File ID: 1239596
Report generated 11/05/2008 09:35

Microbac®

Microbac Laboratories Inc.
CONTINUING CALIBRATION VERIFICATION (CCV)

00077571

Login Number: L08100867
Run Date: 11/04/2008
Sample ID: WG286969-20
Instrument ID: PE-ICP2
Run Time: 17:39
Method: 6010B
File ID: P2.110408.173909
Analyst: JYH
QC Key: STD
Workgroup (AAB#): WG286711
Cal ID: PE-ICP - 04-NOV-08
Matrix: WATER

Analyte		Expected	Found	UNITS	%REC	LIMITS		Q
Aluminum		10.0	9.90	mg/L	99.0	90 - 110		
Beryllium		0.0500	0.0513	mg/L	103	90 - 110		
Calcium		10.0	10.5	mg/L	105	90 - 110		
Cobalt		0.200	0.201	mg/L	100	90 - 110		
Iron		4.00	3.99	mg/L	99.7	90 - 110		
Magnesium		10.0	10.2	mg/L	102	90 - 110		
Potassium		50.0	48.7	mg/L	97.5	90 - 110		
Sodium		50.0	51.0	mg/L	102	90 - 110		
Vanadium		1.00	1.02	mg/L	102	90 - 110		
Zinc		1.00	1.02	mg/L	102	90 - 110		

* Exceeds LIMITS Criteria

CCV - Modified 03/05/2008
PDF File ID: 1239596
Report generated 11/05/2008 09:35

Microbac®

Microbac Laboratories Inc.
CONTINUING CALIBRATION VERIFICATION (CCV)

00077572

Login Number: L08100867
Run Date: 11/04/2008
Sample ID: WG286969-22
Instrument ID: PE-ICP2
Run Time: 18:16
Method: 6010B
File ID: P2.110408.181655
Analyst: JYH
QC Key: STD
Workgroup (AAB#): WG286711
Cal ID: PE-ICP - 04-NOV-08
Matrix: WATER

Analyte		Expected	Found	UNITS	%REC	LIMITS		Q
Aluminum		10.0	10.0	mg/L	100	90 - 110		
Beryllium		0.0500	0.0513	mg/L	103	90 - 110		
Calcium		10.0	10.6	mg/L	106	90 - 110		
Cobalt		0.200	0.203	mg/L	102	90 - 110		
Iron		4.00	4.00	mg/L	100	90 - 110		
Magnesium		10.0	10.2	mg/L	102	90 - 110		
Potassium		50.0	49.3	mg/L	98.5	90 - 110		
Sodium		50.0	51.3	mg/L	103	90 - 110		
Vanadium		1.00	1.01	mg/L	101	90 - 110		
Zinc		1.00	1.03	mg/L	103	90 - 110		

* Exceeds LIMITS Criteria

CCV - Modified 03/05/2008
PDF File ID: 1239596
Report generated 11/05/2008 09:35

Microbac®

Microbac Laboratories Inc.
CONTINUING CALIBRATION VERIFICATION (CCV)

00077573

Login Number: L08100867
Run Date: 11/04/2008
Sample ID: WG286969-26
Instrument ID: PE-ICP2
Run Time: 19:18
Method: 6010B
File ID: P2.110408.191829
Analyst: JYH
QC Key: STD
Workgroup (AAB#): WG286711
Cal ID: PE-ICP - 04-NOV-08
Matrix: WATER

Analyte		Expected	Found	UNITS	%REC	LIMITS		Q
Aluminum		10.0	10.1	mg/L	101	90 - 110		
Beryllium		0.0500	0.0512	mg/L	102	90 - 110		
Calcium		10.0	10.6	mg/L	106	90 - 110		
Cobalt		0.200	0.204	mg/L	102	90 - 110		
Iron		4.00	4.10	mg/L	103	90 - 110		
Magnesium		10.0	10.4	mg/L	104	90 - 110		
Potassium		50.0	49.7	mg/L	99.3	90 - 110		
Sodium		50.0	51.6	mg/L	103	90 - 110		
Vanadium		1.00	1.01	mg/L	101	90 - 110		
Zinc		1.00	1.04	mg/L	104	90 - 110		

* Exceeds LIMITS Criteria

CCV - Modified 03/05/2008
PDF File ID: 1239596
Report generated 11/05/2008 09:35

Microbac®

Microbac Laboratories Inc.
INTERFERENCE CHECK SAMPLES

00077574

Login number: L08100867
Instrument ID: PE-ICP2
Sol. A : WG286797-08 **File ID:** P2.110208.160005
Sol. AB : WG286797-09 **File ID:** P2.110208.160525

Workgroup (AAB#): WG286711
Method: 6010B
Units: mg/L
Matrix: Water

	Sol. A			Sol. AB			
ANALYTE	True	Found	%Recovery	True	Found	%Recovery	Q
Aluminum	250	248	99.2	250	248	99.2	
Beryllium	NS	-0.0000500	NS	0.250	0.246	98.4	
Calcium	250	266	106	250	265	106	
Cobalt	NS	-0.000460	NS	0.250	0.233	93.2	
Iron	100	95.4	95.4	100	95.5	95.5	
Magnesium	250	246	98.4	250	247	98.8	
Potassium	NS	-0.0321	NS	5.00	5.08	102	
Sodium	NS	-0.0205	NS	5.00	5.18	104	
Vanadium	NS	-0.00911	NS	0.250	0.242	96.8	
Zinc	NS	0.00376	NS	0.500	0.458	91.6	

NS = Not spiked
*** = Recovery of spiked element is outside acceptance limit of 80% - 120% of true value.**
 # = Result for unspiked element is outside the acceptance limits of (+/-) the project reporting limit (RL).

ICS - Modified 03/06/2008
PDF File ID: 1239595
Report generated 11/05/2008 09:35

Microbac Laboratories Inc.
INTERFERENCE CHECK SAMPLES

00077575

Login number: L08100867
Instrument ID: PE-ICP2
Sol. A : WG286797-33 **File ID:** P2.110308.042944
Sol. AB : WG286797-34 **File ID:** P2.110308.043507

Workgroup (AAB#): WG286711
Method: 6010B
Units: mg/L
Matrix: Water

	Sol. A			Sol. AB			
ANALYTE	True	Found	%Recovery	True	Found	%Recovery	Q
Aluminum	250	248	99.2	250	247	98.8	
Beryllium	NS	0.000420	NS	0.250	0.249	99.6	
Calcium	250	266	106	250	268	107	
Cobalt	NS	-0.000370	NS	0.250	0.234	93.6	
Iron	100	95.4	95.4	100	94.3	94.3	
Magnesium	250	251	100	250	248	99.2	
Potassium	NS	-0.00317	NS	5.00	5.08	102	
Sodium	NS	0.0562	NS	5.00	5.27	105	
Vanadium	NS	-0.00726	NS	0.250	0.244	97.6	
Zinc	NS	0.00262	NS	0.500	0.460	92.0	

NS = Not spiked
*** = Recovery of spiked element is outside acceptance limit of 80% - 120% of true value.**
 # = Result for unspiked element is outside the acceptance limits of (+/-) the project reporting limit (RL).

ICS - Modified 03/06/2008
PDF File ID: 1239595
Report generated 11/05/2008 09:35

Microbac Laboratories Inc.
INTERFERENCE CHECK SAMPLES

Login number: L08100867
Instrument ID: PE-ICP2
Sol. A : WG286969-08 **File ID:** P2.110408.112130
Sol. AB : WG286969-09 **File ID:** P2.110408.112652

Workgroup (AAB#): WG286711
Method: 6010B
Units: mg/L
Matrix: Water

	Sol. A			Sol. AB			
ANALYTE	True	Found	%Recovery	True	Found	%Recovery	Q
Aluminum	250	262	105	250	243	97.2	
Beryllium	NS	0.0000500	NS	0.250	0.253	101	
Calcium	250	272	109	250	268	107	
Cobalt	NS	-0.0000700	NS	0.250	0.235	94.0	
Iron	100	100	100	100	97.4	97.4	
Magnesium	250	260	104	250	252	101	
Potassium	NS	-0.00741	NS	5.00	4.99	99.8	
Sodium	NS	0.00896	NS	5.00	5.11	102	
Vanadium	NS	-0.00236	NS	0.250	0.248	99.2	
Zinc	NS	0.00385	NS	0.500	0.469	93.8	

NS = Not spiked
*** = Recovery of spiked element is outside acceptance limit of 80% - 120% of true value.**
 # = Result for unspiked element is outside the acceptance limits of (+/-) the project reporting limit (RL).

ICS - Modified 03/06/2008
PDF File ID: 1239595
Report generated 11/05/2008 09:35

Microbac Laboratories Inc.
INTERFERENCE CHECK SAMPLES

00077577

Login number: L08100867
Instrument ID: PE-ICP2
Sol. A : WG286969-24 **File ID:** P2.110408.190746
Sol. AB : WG286969-25 **File ID:** P2.110408.191307

Workgroup (AAB#): WG286711
Method: 6010B
Units: mg/L
Matrix: Water

	Sol. A			Sol. AB			
ANALYTE	True	Found	%Recovery	True	Found	%Recovery	Q
Aluminum	250	248	99.2	250	240	96.0	
Beryllium	NS	0.000420	NS	0.250	0.249	99.6	
Calcium	250	270	108	250	269	108	
Cobalt	NS	-0.000130	NS	0.250	0.232	92.8	
Iron	100	96.9	96.9	100	95.3	95.3	
Magnesium	250	251	100	250	246	98.4	
Potassium	NS	-0.000700	NS	5.00	4.86	97.2	
Sodium	NS	0.0447	NS	5.00	5.13	103	
Vanadium	NS	-0.00502	NS	0.250	0.249	99.6	
Zinc	NS	0.00489	NS	0.500	0.464	92.8	

NS = Not spiked
*** = Recovery of spiked element is outside acceptance limit of 80% - 120% of true value.**
 # = Result for unspiked element is outside the acceptance limits of (+/-) the project reporting limit (RL).

ICS - Modified 03/06/2008
PDF File ID: 1239595
Report generated 11/05/2008 09:35

Microbac Laboratories Inc.
INTERELEMENT CORRECTION FACTORS (ANNUALLY)

00077578

Login Number: L08100867 **Date:** 01/16/2008
Insturment ID: PE-ICP2 **Method:** 6010B

Analyte	Wave Length	AG	AL	AS	B	BA
ALUMINUM	396.15	0	0	0.206	0	0
ANTIMONY	206.84	0	0	-0.740	0	0
ARSENIC	188.98	0	0.0499	0	0	0
BARIUM	233.53	0	0	0	0	0
BERYLLIUM	234.86	0	0	0	0	0
BORON	249.68	0	0	0	0	0
CADMIUM	228.80	0	-0.000200	0.0000100	0	0
CALCIUM	227.55	0	-0.370	0.0414	0	0
CHROMIUM	267.72	0	0	0	0	0
COBALT	228.62	0	0	0	0	-0.0647
COPPER	327.39	0	0	0	0	0
IRON	239.56	0	0	0	0	0
LEAD	220.35	0	-0.104	0	0	0
LITHIUM	670.78	0	0	0	0	0
MAGNESIUM	279.08	0	0	0	0	0
MANGANESE	257.61	-0.185	0	-0.231	-0.0949	-0.230
MOLYBDENUM	202.03	0	0	0	0	0
NICKEL	231.60	0	0	0	0	0
POTASSIUM	766.49	0	0	0	0	0
SELENIUM	196.03	0	0.0669	0	0	0
SILICON	251.61	0	0	0	0	0
SILVER	328.07	0	0	0	0	0
SODIUM	589.59	0	0	0	0	0
STRONTIUM	407.77	0	0	0	0	0
THALLIUM	190.80	0	0	0	0	0
TIN	189.93	0	0	0	0	0
TITANIUM	334.94	0	0	0	0	0
VANADIUM	290.88	0	0	0.200	0	-0.190
ZINC	206.20	0	0	0	0	0

CORR_FACTORS - Modified 03/05/2008
PDF File ID: 1239591
Report generated: 11/05/2008 09:34

Microbac Laboratories Inc.
INTERELEMENT CORRECTION FACTORS (ANNUALLY)

Login Number: L08100867 **Date:** 01/16/2008
Insturment ID: PE-ICP2 **Method:** 6010B

Analyte	Wave Length	BE	CA	CD	CO	CR
ALUMINUM	396.15	0	0.274	0	0	0
ANTIMONY	206.84	0	0	0	0	19.8
ARSENIC	188.98	0	-0.00673	-0.0875	0	-3.78
BARIUM	233.53	0	0	0	0	0
BERYLLIUM	234.86	0	0	0	0	-0.0105
BORON	249.68	0	0.0238	50.1	3.51	1.50
CADMIUM	228.80	0	0	0	-8.00	0
CALCIUM	227.55	0	0	0	174	-21.8
CHROMIUM	267.72	0	0	0	0	0
COBALT	228.62	0	0	0	0	0.436
COPPER	327.39	0	-0.0137	0	0.380	-0.0467
IRON	239.56	0	0.0227	0	1.91	0.331
LEAD	220.35	0	-0.0188	0	0.666	-0.0700
LITHIUM	670.78	0	0	0	0	0
MAGNESIUM	279.08	0	0.638	0	0	0
MANGANESE	257.61	-1.04	-0.00790	-0.755	-0.0418	-0.110
MOLYBDENUM	202.03	0	0	0	0	0
NICKEL	231.60	0	0	0	1.20	0
POTASSIUM	766.49	0	0	0	0	0
SELENIUM	196.03	0	0.117	0	-0.382	0
SILICON	251.61	0	0	0	0	0
SILVER	328.07	0	0	0	0	0
SODIUM	589.59	0	0	0	0	0
STRONTIUM	407.77	0	0	0	0	0
THALLIUM	190.80	0	-0.0100	0	6.00	0
TIN	189.93	0	0	0	0	0
TITANIUM	334.94	0	-0.0233	0	0	0.297
VANADIUM	290.88	0	0.00100	0	0	0
ZINC	206.20	0	0.000000100	0	0	-5.00

CORR_FACTORS - Modified 03/05/2008
PDF File ID: 1239591
Report generated: 11/05/2008 09:34

Microbac Laboratories Inc.
INTERELEMENT CORRECTION FACTORS (ANNUALLY)

00077580

Login Number: L08100867 **Date:** 01/16/2008
Insturment ID: PE-ICP2 **Method:** 6010B

Analyte	Wave Length	CU	FE	K	LI	MG
ALUMINUM	396.15	0	0.108	0	0	0
ANTIMONY	206.84	0	0	0	0	0
ARSENIC	188.98	0	-0.130	0	0	0
BARIUM	233.53	0	0.0211	0	0	0
BERYLLIUM	234.86	0	0.163	0	0	0
BORON	249.68	0	-4.02	0	0	0
CADMIUM	228.80	0	-0.00172	0	0	0
CALCIUM	227.55	-2.44	-8.15	0	0	0.104
CHROMIUM	267.72	0	-0.0180	0	0	0
COBALT	228.62	0	0	0	0	0
COPPER	327.39	0	-0.0128	0	0	0
IRON	239.56	0	0	0	0	0.0276
LEAD	220.35	0.341	0.0593	0	0	0
LITHIUM	670.78	0	0	0	0	0
MAGNESIUM	279.08	0	0.174	0	0	0
MANGANESE	257.61	-0.0457	-0.0659	-0.0181	-0.794	0.0147
MOLYBDENUM	202.03	0	-0.0342	0	11.9	0
NICKEL	231.60	0	0	0	0	0
POTASSIUM	766.49	0	3.00	0	0	0
SELENIUM	196.03	0	-0.700	0	0	-0.0113
SILICON	251.61	0	0	0	0	0
SILVER	328.07	0.0717	-0.0248	0	0	0
SODIUM	589.59	0	0	0	0	0
STRONTIUM	407.77	0	0.00120	0	0	0
THALLIUM	190.80	0	0	0	0	0
TIN	189.93	0	0	0	0	0
TITANIUM	334.94	0	0	0	0	0
VANADIUM	290.88	0	-0.100	0	0	-0.0400
ZINC	206.20	-0.200	0.117	0	0	0

CORR_FACTORS - Modified 03/05/2008
PDF File ID: 1239591
Report generated: 11/05/2008 09:34

Microbac Laboratories Inc.
INTERELEMENT CORRECTION FACTORS (ANNUALLY)

Login Number: L08100867 **Date:** 01/16/2008
Insturment ID: PE-ICP2 **Method:** 6010B

Analyte	Wave Length	MN	MO	NA	NI	PB
ALUMINUM	396.15	0	51.0	0	0	0
ANTIMONY	206.84	0	-17.4	0	0	0
ARSENIC	188.98	0	3.15	0	0	0
BARIUM	233.53	0	-0.740	0	0	0
BERYLLIUM	234.86	-0.131	-0.545	0	-0.00974	0
BORON	249.68	0	-2.08	0	0	0
CADMIUM	228.80	0	0	0	-0.0990	0
CALCIUM	227.55	0	-25.0	0	-1100	0
CHROMIUM	267.72	0.800	-0.00100	0	0	0
COBALT	228.62	0	-0.668	0	0.129	0
COPPER	327.39	0	-0.519	0	-0.0905	-0.0630
IRON	239.56	-1.38	0	0	0	0
LEAD	220.35	0.260	-2.35	0	0	0
LITHIUM	670.78	0	0	0	0	0
MAGNESIUM	279.08	0	-5.58	0	0	0.0252
MANGANESE	257.61	0	-0.0482	-0.00916	-0.0340	-0.0413
MOLYBDENUM	202.03	-0.209	0	0	0.134	0
NICKEL	231.60	0	0	0	0	0
POTASSIUM	766.49	0	0	1.00	0	0
SELENIUM	196.03	1.11	0.199	0	-0.202	0
SILICON	251.61	0	12.9	0	0	0
SILVER	328.07	0.130	0.0781	0	0	0
SODIUM	589.59	0	0	0	0	0
STRONTIUM	407.77	0	0	0	0	0
THALLIUM	190.80	-0.00100	1.20	0	0	0
TIN	189.93	0	0	0	0	0
TITANIUM	334.94	0	0	0	0	0
VANADIUM	290.88	0	0.578	0	0	0
ZINC	206.20	0	3.00	0	-0.200	-0.100

CORR_FACTORS - Modified 03/05/2008
PDF File ID: 1239591
Report generated: 11/05/2008 09:34

Microbac Laboratories Inc.
INTERELEMENT CORRECTION FACTORS (ANNUALLY)

00077582

Login Number: L08100867 **Date:** 01/16/2008
Insturment ID: PE-ICP2 **Method:** 6010B

Analyte	Wave Length	SB	SE	SI	SN	SR
ALUMINUM	396.15	0	0	0	0	0
ANTIMONY	206.84	0	0	0	-7.64	0
ARSENIC	188.98	0	0	0	0	0
BARIUM	233.53	0	0	0	0	0
BERYLLIUM	234.86	0	0	0	0	0
BORON	249.68	0	0	0	0	0
CADMIUM	228.80	0	0	0	0	0
CALCIUM	227.55	0	0	2.79	0	0
CHROMIUM	267.72	0	0	0	0	0
COBALT	228.62	0	0	0	0	0
COPPER	327.39	0	0	0	0	0
IRON	239.56	0	0	0	0	0
LEAD	220.35	-0.0100	0	0	0	0
LITHIUM	670.78	0	0	0	0	0
MAGNESIUM	279.08	0	-0.0924	0	0	0
MANGANESE	257.61	-0.0505	-0.0281	-0.185	-0.0445	-0.625
MOLYBDENUM	202.03	0	0	0	0	0
NICKEL	231.60	-0.0500	-0.0100	0	0	0
POTASSIUM	766.49	0	0	0	0	0
SELENIUM	196.03	0	0	0	0	0
SILICON	251.61	0	0	0	0	0
SILVER	328.07	0	0	0	0	0.200
SODIUM	589.59	0	0	0	0	0
STRONTIUM	407.77	0	0	0	0	0
THALLIUM	190.80	0	0	0	0	0
TIN	189.93	0	0	0	0	0
TITANIUM	334.94	0	0	0	0	0
VANADIUM	290.88	0	0	0	0	0
ZINC	206.20	-0.300	0	0	0	0

CORR_FACTORS - Modified 03/05/2008
PDF File ID: 1239591
Report generated: 11/05/2008 09:34

Microbac Laboratories Inc.
INTERELEMENT CORRECTION FACTORS (ANNUALLY)

Login Number: L08100867 **Date:** 01/16/2008
Insturment ID: PE-ICP2 **Method:** 6010B

Analyte	Wave Length	TI	TL	V	ZN
ALUMINUM	396.15	0	0	0	0
ANTIMONY	206.84	0	0	-3.59	0
ARSENIC	188.98	0	0	0.0930	0
BARIUM	233.53	0	0	-2.27	0
BERYLLIUM	234.86	0	0	0	0
BORON	249.68	0	0	0	0
CADMIUM	228.80	0	0	0.0940	0
CALCIUM	227.55	0	0	11.3	0
CHROMIUM	267.72	0	0	-0.300	-0.0400
COBALT	228.62	2.07	0	0	0
COPPER	327.39	-1.79	0	-0.842	-0.0613
IRON	239.56	0	0	0	0
LEAD	220.35	-0.750	0	-0.150	0
LITHIUM	670.78	0	0	0	0
MAGNESIUM	279.08	0	0	-0.0280	0
MANGANESE	257.61	-0.227	-0.0414	-0.0601	-0.0553
MOLYBDENUM	202.03	0	0	-0.288	0
NICKEL	231.60	0	0.150	0	0
POTASSIUM	766.49	0	0	0	0
SELENIUM	196.03	0	0	0.593	0
SILICON	251.61	0	0	0	0
SILVER	328.07	0	0	-6.38	0
SODIUM	589.59	0	0	0	0
STRONTIUM	407.77	0	0	0	0
THALLIUM	190.80	-4.00	0	0	0
TIN	189.93	0	0	0	0
TITANIUM	334.94	0	0	0	0
VANADIUM	290.88	0	0	0	0
ZINC	206.20	0	0	-0.100	0

CORR_FACTORS - Modified 03/05/2008
PDF File ID: 1239591
Report generated: 11/05/2008 09:34

Microbac Laboratories Inc.
LINEAR RANGE (QUARTERLY)

Login Number: L08100867 **Date:** 09/11/2008
Insturment ID: PE-ICP2 **Method:** 6010B

Analyte	Integration Time (Sec.)	Concentration (mg/L)
Aluminum	10.00	450.0
Antimony	10.00	36.0
Arsenic	10.00	9.0
Barium	10.00	9.0
Beryllium	10.00	1.8
Boron	10.00	18.0
Cadmium	10.00	2.7
Calcium	10.00	450.0
Chromium	10.00	45.0
Cobalt	10.00	45.0
Copper	10.00	45.0
Iron	10.00	450.0
Lead	10.00	90.0
Lithium	10.00	1.6
Magnesium	10.00	450.0
Manganese	10.00	27.0
Molybdenum	10.00	45.0
Nickel	10.00	45.0
Potassium	10.00	72.0
Selenium	10.00	45.0
Silicon	10.00	9.0
Silver	10.00	9.0
Sodium	10.00	180.0
Strontium	10.00	4.5
Thallium	10.00	45.0
Tin	10.00	45.0
Titanium	10.00	45.0
Vanadium	10.00	45.0
Zinc	10.00	45.0

Comments:
All analytes passed acceptance criteria at the specified concentration.

LINEAR_RANGE - Modified 03/06/2008
PDF File ID: 1239590
Report generated: 11/05/2008 09:34

2.2.2 Metals ICP-MS Data

2.2.2.1 Summary Data

LABORATORY REPORT

00077587

L08100867

11/24/08 14:34

Submitted By

Microbac Laboratories Inc.
158 Starlite Drive
Marietta , OH 45750
(740) 373 - 4071

For

Account Name: Shaw E & I, Inc.
ABB Lummus Biulding
3010 Briarpark Drive Suite 4N
Houston, TX 77042
Attention: Jennifer Hoang

Project Number: 2773.025
Project: Longhorn AAP
Site: LONGHORN AAP KARNACK TX
Invoice Number: 597891
P.O. Number: 389869/ 390836(GWTP)

Sample Analysis Summary

Client ID	Lab ID	Method	Dilution	Date Received
LHSMW23-102808	L08100867-05	6020	1	30-OCT-08
LHSMW23-102808	L08100867-05	6020	50	30-OCT-08
LHSMW11-102708	L08100867-07	6020	1	30-OCT-08
LHSMW11-102708	L08100867-07	6020	50	30-OCT-08
LHSMW15-102708	L08100867-09	6020	1	30-OCT-08
LHSMW15-102708	L08100867-09	6020	50	30-OCT-08
46WW04-102708	L08100867-10	6020	50	30-OCT-08
46WW04-102708	L08100867-10	6020	1	30-OCT-08

Report Number: **L08100867**
Report Date : **November 24, 2008**

00077588

Sample Number: **L08100867-05**
Client ID: **LHSMW23-102808**
Matrix: **Water**
Workgroup Number: **WG286590**
Collect Date: **10/28/2008 11:40**
Sample Tag: **01**

PrePrep Method: **NONE**
Prep Method: **3015**
Analytical Method: **6020**
Analyst: **JYH**
Dilution: **1**
Units: **mg/L**

Instrument: **ELAN-ICP**
Prep Date: **10/31/2008 06:47**
Cal Date: **10/31/2008 14:32**
Run Date: **10/31/2008 16:39**
File ID: **EL.103108.163933**

Analyte	CAS. Number	Result	Qual	PQL	SDL
Silver, Total	7440-22-4		U	0.00100	0.000250
Arsenic, Total	7440-38-2	0.00500		0.00100	0.000250
Barium, Total	7440-39-3	0.0216		0.00300	0.000500
Cadmium, Total	7440-43-9	0.000496	J	0.000500	0.000125
Chromium, Total	7440-47-3	0.0257		0.00200	0.000500
Copper, Total	7440-50-8	0.00333		0.00200	0.000500
Lead, Total	7439-92-1		U	0.000500	0.000250
Nickel, Total	7440-02-0	0.0646		0.00400	0.00100
Antimony, Total	7440-36-0		U	0.00100	0.000250
Selenium, Total	7782-49-2	0.0228		0.00100	0.000500
Thallium, Total	7440-28-0	0.000143	J	0.000200	0.0000500

U Not detected at or above adjusted sample detection limit
J The analyte was positively identified, but the quantitation was below the RL

Microbac®

Report Number: **L08100867**
Report Date : **November 24, 2008**

00077589

Sample Number: **L08100867-05**
Client ID: **LHSMW23-102808**
Matrix: **Water**
Workgroup Number: **WG286590**
Collect Date: **10/28/2008 11:40**
Sample Tag: **DL01**

PrePrep Method: **NONE**
Prep Method: **3015**
Analytical Method: **6020**
Analyst: **JYH**
Dilution: **50**
Units: **mg/L**

Instrument: **ELAN-ICP**
Prep Date: **10/31/2008 06:47**
Cal Date: **11/03/2008 11:19**
Run Date: **11/03/2008 16:18**
File ID: **EL.110308.161803**

Analyte	CAS. Number	Result	Qual	PQL	SDL
Manganese, Total	7439-96-5	1.27		0.100	0.0250

Sample Number: L08100867-07
Client ID: LHSMW11-102708
Matrix: Water
Workgroup Number: WG286590
Collect Date: 10/27/2008 12:15
Sample Tag: 01

PrePrep Method: NONE
Prep Method: 3015
Analytical Method: 6020
Analyst: JYH
Dilution: 1
Units: mg/L

Instrument: ELAN-ICP
Prep Date: 10/31/2008 06:47
Cal Date: 10/31/2008 14:32
Run Date: 10/31/2008 16:44
File ID: EL.103108.164454

Analyte	CAS. Number	Result	Qual	PQL	SDL
Silver, Total	7440-22-4		U	0.00100	0.000250
Arsenic, Total	7440-38-2	0.00720		0.00100	0.000250
Barium, Total	7440-39-3	0.0512		0.00300	0.000500
Cadmium, Total	7440-43-9	0.000391	J	0.000500	0.000125
Chromium, Total	7440-47-3	0.0316		0.00200	0.000500
Copper, Total	7440-50-8	0.0814		0.00200	0.000500
Lead, Total	7439-92-1		U	0.000500	0.000250
Antimony, Total	7440-36-0		U	0.00100	0.000250
Selenium, Total	7782-49-2	0.0321		0.00100	0.000500
Thallium, Total	7440-28-0	0.0000545	J	0.000200	0.0000500

U Not detected at or above adjusted sample detection limit
J The analyte was positively identified, but the quantitation was below the RL

Report Number: **L08100867**
Report Date : **November 24, 2008**

00077591

Sample Number: **L08100867-07**
Client ID: **LHSMW11-102708**
Matrix: **Water**
Workgroup Number: **WG286590**
Collect Date: **10/27/2008 12:15**
Sample Tag: **DL01**

PrePrep Method: **NONE**
Prep Method: **3015**
Analytical Method: **6020**
Analyst: **JYH**
Dilution: **50**
Units: **mg/L**

Instrument: **ELAN-ICP**
Prep Date: **10/31/2008 06:47**
Cal Date: **11/03/2008 11:19**
Run Date: **11/03/2008 16:23**
File ID: **EL.110308.162324**

Analyte	CAS. Number	Result	Qual	PQL	SDL
Manganese, Total	7439-96-5	0.743		0.100	0.0250
Nickel, Total	7440-02-0	3.59		0.200	0.0500

Sample Number: L08100867-09
Client ID: LHSMW15-102708
Matrix: Water
Workgroup Number: WG286590
Collect Date: 10/27/2008 13:50
Sample Tag: 01

PrePrep Method: NONE
Prep Method: 3015
Analytical Method: 6020
Analyst: JYH
Dilution: 1
Units: mg/L

Instrument: ELAN-ICP
Prep Date: 10/31/2008 06:47
Cal Date: 10/31/2008 14:32
Run Date: 10/31/2008 16:50
File ID: EL.103108.165015

Analyte	CAS. Number	Result	Qual	PQL	SDL
Silver, Total	7440-22-4		U	0.00100	0.000250
Arsenic, Total	7440-38-2	0.00566		0.00100	0.000250
Barium, Total	7440-39-3	0.0162		0.00300	0.000500
Cadmium, Total	7440-43-9	0.00125		0.000500	0.000125
Chromium, Total	7440-47-3	0.226		0.00200	0.000500
Copper, Total	7440-50-8	0.0204		0.00200	0.000500
Lead, Total	7439-92-1		U	0.000500	0.000250
Manganese, Total	7439-96-5	0.0332		0.00200	0.000500
Antimony, Total	7440-36-0		U	0.00100	0.000250
Selenium, Total	7782-49-2	0.0245		0.00100	0.000500
Thallium, Total	7440-28-0	0.0000938	J	0.000200	0.0000500

U Not detected at or above adjusted sample detection limit
J The analyte was positively identified, but the quantitation was below the RL

Report Number: **L08100867**
Report Date : **November 24, 2008**

Sample Number: **L08100867-09**
Client ID: **LHSMW15-102708**
Matrix: **Water**
Workgroup Number: **WG286590**
Collect Date: **10/27/2008 13:50**
Sample Tag: **DL01**

PrePrep Method: **NONE**
Prep Method: **3015**
Analytical Method: **6020**
Analyst: **JYH**
Dilution: **50**
Units: **mg/L**

Instrument: **ELAN-ICP**
Prep Date: **10/31/2008 06:47**
Cal Date: **11/03/2008 11:19**
Run Date: **11/03/2008 16:28**
File ID: **EL.110308.162845**

Analyte	CAS. Number	Result	Qual	PQL	SDL
Nickel, Total	7440-02-0	0.975		0.200	0.0500

Report Number: **L08100867**
Report Date : **November 24, 2008**

00077594

Sample Number: **L08100867-10**
Client ID: **46WW04-102708**
Matrix: **Water**
Workgroup Number: **WG286590**
Collect Date: **10/27/2008 14:35**
Sample Tag: **DL01**

PrePrep Method: **NONE**
Prep Method: **3015**
Analytical Method: **6020**
Analyst: **JYH**
Dilution: **50**
Units: **mg/L**

Instrument: **ELAN-ICP**
Prep Date: **10/31/2008 06:47**
Cal Date: **11/03/2008 11:19**
Run Date: **11/03/2008 16:34**
File ID: **EL.110308.163407**

Analyte	CAS. Number	Result	Qual	PQL	SDL
Manganese, Total	7439-96-5	1.10		0.100	0.0250
Nickel, Total	7440-02-0	2.11		0.200	0.0500

Report Number: **L08100867**
Report Date : **November 24, 2008**

Sample Number: **L08100867-10**
Client ID: **46WW04-102708**
Matrix: **Water**
Workgroup Number: **WG286590**
Collect Date: **10/27/2008 14:35**
Sample Tag: **01**

PrePrep Method: **NONE**
Prep Method: **3015**
Analytical Method: **6020**
Analyst: **JYH**
Dilution: **1**
Units: **mg/L**

Instrument: **ELAN-ICP**
Prep Date: **10/31/2008 06:47**
Cal Date: **10/31/2008 14:32**
Run Date: **10/31/2008 16:55**
File ID: **EL.103108.165536**

Analyte	CAS. Number	Result	Qual	PQL	SDL
Silver, Total	7440-22-4		U	0.00100	0.000250
Arsenic, Total	7440-38-2	0.00449		0.00100	0.000250
Barium, Total	7440-39-3	0.0253		0.00300	0.000500
Cadmium, Total	7440-43-9	0.000933		0.000500	0.000125
Chromium, Total	7440-47-3	0.0909		0.00200	0.000500
Copper, Total	7440-50-8	0.0115		0.00200	0.000500
Lead, Total	7439-92-1		U	0.000500	0.000250
Antimony, Total	7440-36-0		U	0.00100	0.000250
Selenium, Total	7782-49-2	0.0210		0.00100	0.000500
Thallium, Total	7440-28-0		U	0.000200	0.0000500

U Not detected at or above adjusted sample detection limit

2.2.2.2 QC Summary Data

Example 6020 Calculations
Perkin Elmer ELAN 6100

1.0 Initial Calibration (ICAL) Parameters
The system performs linear regression from data consisting of a blank and three standards.

2.0 Calculating the concentration (C) of an element in water using data from prep log, run log, and quantitation report (note:the data system performs this calculation automatically when correction factors have been entered):

$$Cx = Cs \times \frac{Vf}{Vi} \times D$$

Where:	**Example:**
Cs = Concentration computed by the data system (ug/L)	0.1
Vf = Final volume	100
Vi = Initial volume	40
D = Dilution factor as a multiplier (10X = 10)	1
Cx = Concentration of element in (ug/L)	0.25

3.0 Calculating the concentration (C) of an element in soil using data from prep log, run log, and quantitation report (note: the data system performs this calculation automatically when correction factors have been entered):

$$Cx = Cs \times \frac{Vf}{Vi} \times D$$

Where:	**Example:**
Cs = Concentration computed by the data system (ug/L)	0.1
Vf = Final volume	200
Vi = Initial volume	0.5
D = Dilution factor as a multiplier (10X = 10)	1
Cx = Concentration of element in (ug/kg)	40

4.0 Adjusting the concentration to dry weight:

$$Cdry = \frac{Cx \times 100}{Px}$$

Where:	**Example:**
Cx = Concentration calculated as received (wet basis)	40
Px = Percent solids of sample (%wt)	80
$Cdry$ = Concentration calculated as dry weight (ug/kg)	50

50 ug/kg = 0.050 mg/kg

Perkin Elmer ELAN ICP/MS

STANDARDS KEY

QC Std 1 - ICV
QC Std 2 - ICB
QC Std 3 - CRI - Soil
QC Std 4 - CRI - Water
QC Std 5 - ICSA
QC Std 6 - ICSAB
QC Std 7 - CCV
QC Std 8 - CCB

Calibration Solutions

Analyte	Stock Conc. (mg/L)	S1 (mg/L)	S2 (mg/L)	S3 (mg/L)	S4 (mg/L)
Al	10	0	0.0004	0.05	0.1
Sb	10	0	0.0004	0.05	0.1
As	10	0	0.0004	0.05	0.1
Ba	10	0	0.0004	0.05	0.1
Be	10	0	0.0004	0.05	0.1
Ca	1000	0	0.04	5	10
Cd	10	0	0.0004	0.05	0.1
Cr	10	0	0.0004	0.05	0.1
Co	10	0	0.0004	0.05	0.1
Cu	10	0	0.0004	0.05	0.1
Fe	1000	0	0.04	5	10
Pb	10	0	0.0004	0.05	0.1
Mg	1000	0	0.04	5	10
Mn	10	0	0.0004	0.05	0.1
Ni	10	0	0.0004	0.05	0.1
K	1000	0	0.04	5	10
Se	10	0	0.0004	0.05	0.1
Ag	10	0	0.0004	0.05	0.1
Na	1000	0	0.04	5	10
Tl	10	0	0.0004	0.05	0.1
V	10	0	0.0004	0.05	0.1
Zn	10	0	0.0004	0.05	0.1

Microbac Laboratories Inc.
Microwave Digestion Log

00077599

Workgroup: WG286552
Analyst: VC
Run Date: 10/31/2008 06:47
Method: 3015

SOP: ME407 Revison 10
Spike Solution: STD27101
Spike Witness: REK
HNO3 Lot #: COA13347
Digest tubes Lot #: COA13407

SAMPLE #	Type	Matrix	Initial Amount	Final Volume	Initial Vessel Wt	Final Vessel Wt	Spike Amount	Due Date
WG286552-02	BLANK	1	40 mL	100 mL	206.285 g	206.274 g		
WG286552-03	LCS	1	40 mL	100 mL	205.652 g	205.64 g	.25 mL	
WG286552-01	REF	2	40 mL	100 mL	206.497 g	206.486 g		
L08100771-01	SAMP	2	40 mL	100 mL	206.497 g	206.486 g		11/03/08
L08100808-33	SAMP	1	40 mL	100 mL	205.95 g	205.955 g		11/07/08
L08100832-01	SAMP	1	40 mL	100 mL	205.378 g	205.353 g		11/04/08
L08100832-02	SAMP	1	40 mL	100 mL	206.525 g	206.515 g		11/04/08
L08100846-01	SAMP	2	40 mL	100 mL	208.347 g	208.362 g		11/03/08
L08100867-05	SAMP	1	40 mL	100 mL	205.958 g	205.938 g		11/10/08
L08100867-07	SAMP	1	40 mL	100 mL	205.445 g	205.409 g		11/10/08
L08100867-09	SAMP	1	40 mL	100 mL	206.735 g	206.707 g		11/10/08
L08100867-10	SAMP	1	40 mL	100 mL	207.116 g	207.092 g		11/10/08
WG286552-06	DUP	1	40 mL	100 mL	205.103 g	205.08 g		
WG286552-04	MS	1	40 mL	100 mL	204.458 g	206.446 g	.25 mL	
WG286552-05	MSD	1	40 mL	100 mL	206.898 g	206.869 g	.25 mL	

Analyst: Vicki Collins

Reviewer:

MW_DIG - Modified 07/02/2008
PDF ID: 1237251
Report generated: 10/31/2008 07:51

Microbac®

Microbac Laboratories Inc.

Instrument Run Log

Instrument: ELAN-ICP Dataset: 103108C.REP
Analyst1: JYH Analyst2: N/A
Method: 6020 SOP: ME700 Rev: 4
Maintenance Log ID: 25989

Calibration Std: STD29446 ICV/CCV Std: STD29323 Post Spike: STD27580
ICSA: STD29585 ICSAB: STD29300

Workgroups: 286615,286590

Comments:

Seq.	File ID	Sample	ID	Prep	Dil	Reference	Date/Time
1	EL.103108.140959	Blank	Blank		1		10/31/08 14:09
2	EL.103108.141539	WG286693-01	Calibration Point		1		10/31/08 14:15
3	EL.103108.142119	WG286693-02	Calibration Point		1		10/31/08 14:21
4	EL.103108.142700	WG286693-03	Calibration Point		1		10/31/08 14:27
5	EL.103108.143242	WG286693-04	Calibration Point		1		10/31/08 14:32
6	EL.103108.143825	WG286693-05	Initial Calibration Verification		1		10/31/08 14:38
7	EL.103108.144406	WG286693-06	Initial Calib Blank		1		10/31/08 14:44
8	EL.103108.144949	WG286693-07	CRQL Check Solid		1		10/31/08 14:49
9	EL.103108.145535	WG286693-08	CRQL Check Water		1		10/31/08 14:55
10	EL.103108.150119	WG286693-09	Interference Check		1		10/31/08 15:01
11	EL.103108.150703	WG286693-10	Interference Check		1		10/31/08 15:07
12	EL.103108.151247	WG286693-11	CCV		1		10/31/08 15:12
13	EL.103108.151828	WG286693-12	CCB		1		10/31/08 15:18
14	EL.103108.152348	WG286552-02	Method/Prep Blank	40/100	1		10/31/08 15:23
15	EL.103108.152908	WG286552-03	Laboratory Control Sample	40/100	1		10/31/08 15:29
16	EL.103108.153428	WG286552-01	Reference Sample		1	L08100771-01	10/31/08 15:34
17	EL.103108.153949	WG286552-04	Matrix Spike	40/100	1		10/31/08 15:39
18	EL.103108.154511	WG286552-05	Matrix Spike Duplicate	40/100	1		10/31/08 15:45
19	EL.103108.155032	WG286552-06	Duplicate	40/100	1		10/31/08 15:50
20	EL.103108.155554	L08100846-01	OUTFALL 002/COMP	40/100	2		10/31/08 15:55
21	EL.103108.160116	L08100808-33	EB-102808	40/100	1		10/31/08 16:01
22	EL.103108.160639	WG286590-01	Post Digestion Spike		1		10/31/08 16:06
23	EL.103108.161201	WG286590-02	Serial Dilution		5		10/31/08 16:12
24	EL.103108.161744	WG286693-13	CCV		1		10/31/08 16:17
25	EL.103108.162326	WG286693-14	CCB		1		10/31/08 16:23
26	EL.103108.162847	L08100832-01	LH/24-SP650-6117-GRAB	40/100	1		10/31/08 16:28
27	EL.103108.163411	L08100832-02	LH/24-SP650-6117-COMP	40/100	1	WG286586-03	10/31/08 16:34
28	EL.103108.163933	L08100867-05	LHSMW23-102808	40/100	1		10/31/08 16:39
29	EL.103108.164454	L08100867-07	LHSMW11-102708	40/100	1		10/31/08 16:44
30	EL.103108.165015	L08100867-09	LHSMW15-102708	40/100	1		10/31/08 16:50
31	EL.103108.165536	L08100867-10	46WW04-102708	40/100	1		10/31/08 16:55
32	EL.103108.170057	WG286452-02	Method/Prep Blank		1		10/31/08 17:00
33	EL.103108.170619	WG286452-03	Laboratory Control Sample		1		10/31/08 17:06
34	EL.103108.171142	WG286452-01	Reference Sample		5	L08100808-21	10/31/08 17:11
35	EL.103108.171704	WG286452-04	Matrix Spike		5	L08100808-22	10/31/08 17:17
36	EL.103108.172247	WG286693-15	CCV		1		10/31/08 17:22
37	EL.103108.172829	WG286693-16	CCB		1		10/31/08 17:28

Page: 1 Approved: November 04, 2008

Maren Berry

Microbac®

Microbac Laboratories Inc.

Instrument Run Log

Instrument: ELAN-ICP Dataset: 103108C.REP
Analyst1: JYH Analyst2: N/A
Method: 6020 SOP: ME700 Rev: 4
Maintenance Log ID: 25989

Calibration Std: STD29446 ICV/CCV Std: STD29323 Post Spike: STD27580
ICSA: STD29585 ICSAB: STD29300

Workgroups: 286615,286590

Comments:

Seq.	File ID	Sample	ID	Prep	Dil	Reference	Date/Time
38	EL.103108.173350	WG286452-05	Matrix Spike Duplicate		5	L08100808-23	10/31/08 17:33
39	EL.103108.173913	L08100808-01	SR-208-704-0001		5		10/31/08 17:39
40	EL.103108.174437	L08100808-02	SR-208-704-0405		5	WG286524-04	10/31/08 17:44
41	EL.103108.175001	WG286514-01	Post Digestion Spike		5		10/31/08 17:50
42	EL.103108.175524	WG286514-02	Serial Dilution		25		10/31/08 17:55
43	EL.103108.180045	L08100808-03	SR-208-704-0910		5		10/31/08 18:00
44	EL.103108.180607	L08100808-04	SR-208-705-0001		5		10/31/08 18:06
45	EL.103108.181129	L08100808-05	SR-208-705-0405		5		10/31/08 18:11
46	EL.103108.181651	L08100808-06	SR-208-705-0910		5		10/31/08 18:16
47	EL.103108.182214	L08100808-07	SR-208-706-0001		5		10/31/08 18:22
48	EL.103108.182757	WG286693-17	CCV		1		10/31/08 18:27
49	EL.103108.183338	WG286693-18	CCB		1		10/31/08 18:33
50	EL.103108.183900	L08100808-08	SR-208-706-0405		5		10/31/08 18:39
51	EL.103108.184423	L08100808-09	SR-208-706-0910		5		10/31/08 18:44
52	EL.103108.184947	L08100808-10	SR-208-707-0001-N		5		10/31/08 18:49
53	EL.103108.185511	L08100808-11	SR-208-707-0001-D		5		10/31/08 18:55
54	EL.103108.190035	L08100808-12	SR-208-707-0405-N		5		10/31/08 19:00
55	EL.103108.190600	L08100808-13	SR-208-707-0405-D		5		10/31/08 19:06
56	EL.103108.191123	L08100808-14	SR-208-707-0607-N		5		10/31/08 19:11
57	EL.103108.191645	L08100808-15	SR-208-707-0607-D		5		10/31/08 19:16
58	EL.103108.192207	L08100808-16	SR-208-707-0910-N		5		10/31/08 19:22
59	EL.103108.192729	L08100808-17	SR-208-707-0910-D		25		10/31/08 19:27
60	EL.103108.193312	WG286693-19	CCV		1		10/31/08 19:33
61	EL.103108.193854	WG286693-20	CCB		1		10/31/08 19:38
62	EL.103108.194415	L08100808-18	SR-208-708-0001		5	WG286541-01	10/31/08 19:44
63	EL.103108.194938	L08100808-19	SR-208-708-0506		5		10/31/08 19:49
64	EL.103108.195502	WG286483-03	Method/Prep Blank	.5/200	1		10/31/08 19:55
65	EL.103108.200025	WG286483-04	Laboratory Control Sample	.5/200	1		10/31/08 20:00
66	EL.103108.200549	L08100808-20	SR-208-708-0910	.5/200	5	WG286506-01	10/31/08 20:05
67	EL.103108.201114	WG286615-01	Post Digestion Spike		5		10/31/08 20:11
68	EL.103108.201639	WG286615-02	Serial Dilution		25		10/31/08 20:16
69	EL.103108.202204	WG286483-01	Reference Sample		5	L08100808-24	10/31/08 20:22
70	EL.103108.202727	WG286483-05	Matrix Spike	.504/200	5	L08100808-25	10/31/08 20:27
71	EL.103108.203249	WG286483-06	Matrix Spike Duplicate	.504/200	5	L08100808-26	10/31/08 20:32
72	EL.103108.203832	WG286693-21	CCV		1		10/31/08 20:38
73	EL.103108.204414	WG286693-22	CCB		1		10/31/08 20:44
74	EL.103108.204935	WG286483-02	Reference Sample		5	L08100808-27	10/31/08 20:49

Page: 2 Approved: November 04, 2008

Maren Berry

Microbac®

Microbac Laboratories Inc.

Instrument Run Log

Instrument: ELAN-ICP Dataset: 103108C.REP
Analyst1: JYH Analyst2: N/A
Method: 6020 SOP: ME700 Rev: 4
Maintenance Log ID: 25989

Calibration Std: STD29446 ICV/CCV Std: STD29323 Post Spike: STD27580
ICSA: STD29585 ICSAB: STD29300

Workgroups: 286615,286590

Comments:

Seq.	File ID	Sample	ID	Prep	Dil	Reference	Date/Time
75	EL.103108.205458	WG286483-07	Matrix Spike	.503/200	5	L08100808-28	10/31/08 20:54
76	EL.103108.210021	WG286483-08	Matrix Spike Duplicate	.503/200	5	L08100808-29	10/31/08 21:00
77	EL.103108.210544	L08100808-30	SR-208-710-0001	.51/200	5		10/31/08 21:05
78	EL.103108.211108	L08100808-31	SR-208-710-0405	.5/200	5		10/31/08 21:11
79	EL.103108.211632	L08100808-32	SR-208-710-0910	.504/200	5	WG286506-02	10/31/08 21:16
80	EL.103108.212216	WG286693-23	CCV		1		10/31/08 21:22
81	EL.103108.212757	WG286693-24	CCB		1		10/31/08 21:27

Page: 3 Approved: November 04, 2008

Marcia Berry

Microbac®

Microbac Laboratories Inc.

Instrument Run Log

Instrument: ELAN-ICP Dataset: 110308A.REP
Analyst1: JYH Analyst2: N/A
Method: 6020 SOP: ME700 Rev: 4
Maintenance Log ID: 25989

Calibration Std: STD29446 ICV/CCV Std: STD29323 Post Spike: STD27580
ICSA: STD29585 ICSAB: STD29300

Workgroups: 286772,286386,286590,286514

Comments:

Seq.	File ID	Sample	ID	Prep	Dil	Reference	Date/Time
1	EL.110308.105703	Blank	Blank		1		11/03/08 10:57
2	EL.110308.110243	WG286854-01	Calibration Point		1		11/03/08 11:02
3	EL.110308.110823	WG286854-02	Calibration Point		1		11/03/08 11:08
4	EL.110308.111404	WG286854-03	Calibration Point		1		11/03/08 11:14
5	EL.110308.111946	WG286854-04	Calibration Point		1		11/03/08 11:19
6	EL.110308.112528	WG286854-05	Initial Calibration Verification		1		11/03/08 11:25
7	EL.110308.113110	WG286854-06	Initial Calib Blank		1		11/03/08 11:31
8	EL.110308.113652	WG286854-07	CRQL Check Solid		1		11/03/08 11:36
9	EL.110308.114238	WG286854-08	CRQL Check Water		1		11/03/08 11:42
10	EL.110308.114823	WG286854-09	Interference Check		1		11/03/08 11:48
11	EL.110308.115407	WG286854-10	Interference Check		1		11/03/08 11:54
12	EL.110308.115950	WG286854-11	CCV		1		11/03/08 11:59
13	EL.110308.120532	WG286854-12	CCB		1		11/03/08 12:05
14	EL.110308.121051	WG286717-02	Method/Prep Blank	.5/200	1		11/03/08 12:10
15	EL.110308.121612	WG286717-03	Laboratory Control S	.5/200	1		11/03/08 12:16
16	EL.110308.122132	WG286717-01	Reference Sample		5	L08100877-01	11/03/08 12:21
17	EL.110308.122653	WG286717-04	Matrix Spike		5	L08100877-01	11/03/08 12:26
18	EL.110308.123214	WG286717-05	Matrix Spike Duplica		5	L08100877-01	11/03/08 12:32
19	EL.110308.123736	L08100877-02	GRID 12-07 FLOOR - 6'		5		11/03/08 12:37
20	EL.110308.124257	L08100877-03	GRID 16-12		5		11/03/08 12:42
21	EL.110308.124820	L08100873-04	SS-4	.502/200	1	WG286720-01	11/03/08 12:48
22	EL.110308.125342	WG286772-01	Post Digestion Spike		1	L08100873-04	11/03/08 12:53
23	EL.110308.125905	WG286772-02	Serial Dilution		5	L08100873-04	11/03/08 12:59
24	EL.110308.130448	WG286854-13	CCV		1		11/03/08 13:04
25	EL.110308.131029	WG286854-14	CCB		1		11/03/08 13:10
26	EL.110308.131551	L08100873-01	SS-1	.506/200	1	WG286761-01	11/03/08 13:15
27	EL.110308.132114	L08100873-02	SS-2	.516/200	1		11/03/08 13:21
28	EL.110308.132636	L08100873-03	SS-3	.504/200	1		11/03/08 13:26
29	EL.110308.133157	L08100873-05	SS-5	.532/200	1		11/03/08 13:31
30	EL.110308.133718	L08100873-06	SS-6	.501/200	1		11/03/08 13:37
31	EL.110308.134239	L08100873-07	SS-7	.523/200	1		11/03/08 13:42
32	EL.110308.134801	L08100873-08	SS-8	.504/200	1		11/03/08 13:48
33	EL.110308.135416	WG286717-01	Reference Sample		25	L08100877-01	11/03/08 13:54
34	EL.110308.135937	WG286717-04	Matrix Spike	.5/200	25	L08100877-01	11/03/08 13:59
35	EL.110308.140458	WG286717-05	Matrix Spike Duplica	.5/200	25	L08100877-01	11/03/08 14:04
36	EL.110308.141459	WG286854-15	CCV		1		11/03/08 14:14
37	EL.110308.142041	WG286854-16	CCB		1		11/03/08 14:20

Page: 1 Approved: November 05, 2008

Microbac

Microbac Laboratories Inc.

Instrument Run Log

Instrument: ELAN-ICP Dataset: 110308A.REP
Analyst1: JYH Analyst2: N/A
Method: 6020 SOP: ME700 Rev: 4
Maintenance Log ID: 25989

Calibration Std: STD29446 ICV/CCV Std: STD29323 Post Spike: STD27580
ICSA: STD29585 ICSAB: STD29300

Workgroups: 286772,286386,286590,286514

Comments:

Seq.	File ID	Sample	ID	Prep	Dil	Reference	Date/Time
38	EL.110308.142602	L08100877-02	GRID 12-07 FLOOR - 6'	.501/200	25		11/03/08 14:26
39	EL.110308.143124	L08100877-03	GRID 16-12	.502/200	25		11/03/08 14:31
40	EL.110308.144003	L08100796-07	29WW02-102308	40/100	50		11/03/08 14:40
41	EL.110308.144524	L08100796-09	29WW26-102408	40/100	50		11/03/08 14:45
42	EL.110308.145045	L08100796-12	29WW07-102508	40/100	50		11/03/08 14:50
43	EL.110308.145607	L08100796-13	29WW33-102508	40/100	50		11/03/08 14:56
44	EL.110308.150136	L08100796-12	29WW07-102508		50		11/03/08 15:01
45	EL.110308.150657	L08100796-13	29WW33-102508		50		11/03/08 15:06
46	EL.110308.151240	WG286854-17	CCV		1		11/03/08 15:12
47	EL.110308.151821	WG286854-18	CCB		1		11/03/08 15:18
48	EL.110308.152341	L08100796-01	29WW30-102308	40/100	50		11/03/08 15:23
49	EL.110308.152903	L08100796-02	29WW30-102308-QA	40/100	50		11/03/08 15:29
50	EL.110308.153425	WG286313-02	Reference Sample		50	L08100796-03	11/03/08 15:34
51	EL.110308.153947	WG286313-07	Matrix Spike	40/100	50	L08100796-04	11/03/08 15:39
52	EL.110308.154509	WG286313-08	Matrix Spike Duplica	40/100	50	L08100796-05	11/03/08 15:45
53	EL.110308.155032	L08100796-06	29WW29-102308	40/100	50		11/03/08 15:50
54	EL.110308.155555	L08100796-08	29WW27-102308	40/100	50		11/03/08 15:55
55	EL.110308.160119	L08100796-10	29WW13-102408	40/100	50		11/03/08 16:01
56	EL.110308.160702	WG286854-19	CCV		1		11/03/08 16:07
57	EL.110308.161244	WG286854-20	CCB		1		11/03/08 16:12
58	EL.110308.161803	L08100867-05	LHSMW23-102808	40/100	50		11/03/08 16:18
59	EL.110308.162324	L08100867-07	LHSMW11-102708	40/100	50		11/03/08 16:23
60	EL.110308.162845	L08100867-09	LHSMW15-102708	40/100	50		11/03/08 16:28
61	EL.110308.163407	L08100867-10	46WW04-102708	40/100	50		11/03/08 16:34
62	EL.110308.163949	WG286854-21	CCV		1		11/03/08 16:39
63	EL.110308.164531	WG286854-22	CCB		1		11/03/08 16:45
64	EL.110308.165052	WG286452-02	Method/Prep Blank	.5/200	1		11/03/08 16:50
65	EL.110308.165614	WG286452-03	Laboratory Control S	.5/200	1		11/03/08 16:56
66	EL.110308.170137	WG286452-01	Reference Sample		5	L08100808-21	11/03/08 17:01
67	EL.110308.170700	WG286452-04	Matrix Spike	.5/200	5	L08100808-21	11/03/08 17:07
68	EL.110308.171224	WG286452-05	Matrix Spike Duplica	.5/200	5	L08100808-21	11/03/08 17:12
69	EL.110308.171747	L08100808-01	SR-208-704-0001	.502/200	5		11/03/08 17:17
70	EL.110308.172311	L08100808-02	SR-208-704-0405	.515/200	5	WG286524-04	11/03/08 17:23
71	EL.110308.172836	WG286514-01	Post Digestion Spike		5	L08100808-02	11/03/08 17:28
72	EL.110308.173359	WG286514-02	Serial Dilution		25	L08100808-02	11/03/08 17:33
73	EL.110308.173941	WG286854-23	CCV		1		11/03/08 17:39
74	EL.110308.174522	WG286854-24	CCB		1		11/03/08 17:45

Page: 2 Approved: November 05, 2008

Marcia Berry

Microbac®

Microbac Laboratories Inc.

Instrument Run Log

Instrument: ELAN-ICP Dataset: 110308A.REP
Analyst1: JYH Analyst2: N/A
Method: 6020 SOP: ME700 Rev: 4
Maintenance Log ID: 25989

Calibration Std: STD29446 ICV/CCV Std: STD29323 Post Spike: STD27580
ICSA: STD29585 ICSAB: STD29300

Workgroups: 286772,286386,286590,286514

Comments:

Seq.	File ID	Sample	ID	Prep	Dil	Reference	Date/Time
75	EL.110308.175043	L08100808-03	SR-208-704-0910	.5/200	5		11/03/08 17:50
76	EL.110308.175605	L08100808-04	SR-208-705-0001	.513/200	5		11/03/08 17:56
77	EL.110308.180126	L08100808-05	SR-208-705-0405	.5/200	5		11/03/08 18:01
78	EL.110308.180649	L08100808-06	SR-208-705-0910	.516/200	5		11/03/08 18:06
79	EL.110308.181211	L08100808-07	SR-208-706-0001	.508/200	5		11/03/08 18:12
80	EL.110308.181734	L08100808-08	SR-208-706-0405	.507/200	5		11/03/08 18:17
81	EL.110308.182258	L08100808-09	SR-208-706-0910	.5/200	5		11/03/08 18:22
82	EL.110308.182821	L08100808-10	SR-208-707-0001-N	.538/200	5		11/03/08 18:28
83	EL.110308.183345	L08100808-11	SR-208-707-0001-D	.507/200	5		11/03/08 18:33
84	EL.110308.183910	L08100808-12	SR-208-707-0405-N	.52/200	5		11/03/08 18:39
85	EL.110308.184453	WG286854-25	CCV		1		11/03/08 18:44
86	EL.110308.185035	WG286854-26	CCB		1		11/03/08 18:50
87	EL.110308.185557	L08100808-13	SR-208-707-0405-D	.502/200	5		11/03/08 18:55
88	EL.110308.190121	L08100808-14	SR-208-707-0607-N	.506/200	5		11/03/08 19:01
89	EL.110308.190642	L08100808-15	SR-208-707-0607-D	.517/200	5		11/03/08 19:06
90	EL.110308.191204	L08100808-16	SR-208-707-0910-N	.513/200	5		11/03/08 19:12
91	EL.110308.191727	L08100808-17	SR-208-707-0910-D	.505/200	25		11/03/08 19:17
92	EL.110308.192249	L08100808-18	SR-208-708-0001	.503/200	5	WG286541-01	11/03/08 19:22
93	EL.110308.192812	L08100808-19	SR-208-708-0506	.5/200	5		11/03/08 19:28
94	EL.110308.193356	WG286854-27	CCV		1		11/03/08 19:33
95	EL.110308.193937	WG286854-28	CCB		1		11/03/08 19:39

Page: 3 Approved: November 05, 2008

Marcia Berry

Microbac®

Checklist ID: 33231
00077606

Microbac Laboratories Inc.

Data Checklist

Date: 31-OCT-2008
Analyst: JYH
Analyst: NA
Method: 6020
Instrument: ELAN
Curve Workgroup: 286693
Runlog ID: 25028
Analytical Workgroups: 286615,286590

Calibration/Linearity	X
ICV/CCV	X
ICB/CCB	X
ICSA/ICSAB	X
CRI	X
Blank/LCS	X
MS/MSD	X
Post Spike/Serial Dilution	X
Upload Results	X
Data Qualifiers	X
Generate PDF Instrument Data	X
Sign/Annotate PDF Data	X
Upload Curve Data	X
Workgroup Forms	
Case Narrative	771,808,832,846,867
Client Forms	X
Level X	
Level 3	832,867
Level 4	808
Check for compliance with method and project specific requirements	X
Check the completeness of reported information	X
Check the information for the report narrative	X
Primary Reviewer	JYH
Secondary Reviewer	MMB
Comments	

Primary Reviewer:
01-NOV-2008

Secondary Reviewer:
04-NOV-2008

CHECKLIST1 - Modified 03/05/2008
Generated: NOV-04-2008 15:52:47

Checklist ID: 33293

00077607

Microbac Laboratories Inc.

Data Checklist

Date: 03-NOV-2008

Analyst: JYH

Analyst: NA

Method: 6020

Instrument: ELAN

Curve Workgroup: 286854

Runlog ID: 25055

Analytical Workgroups: 286772,286386,286590,286514

Calibration/Linearity	X
ICV/CCV	X
ICB/CCB	X
ICSA/ICSAB	X
CRI	X
Blank/LCS	X
MS/MSD	X
Post Spike/Serial Dilution	X
Upload Results	X
Data Qualifiers	X
Generate PDF Instrument Data	X
Sign/Annotate PDF Data	X
Upload Curve Data	X
Workgroup Forms	
Case Narrative	873,877,796,867,808
Client Forms	X
Level X	
Level 3	796,867,808
Level 4	877
Check for compliance with method and project specific requirements	X
Check the completeness of reported information	X
Check the information for the report narrative	X
Primary Reviewer	JYH
Secondary Reviewer	MMB
Comments	

Primary Reviewer:
04-NOV-2008

Secondary Reviewer:
05-NOV-2008

CHECKLIST1 - Modified 03/05/2008

Generated: NOV-05-2008 15:14:45

Microbac Laboratories Inc.

HOLDING TIMES
EQUIVALENT TO AFCEE FORM 9

00077608

Analytical Method: 6020 AAB#: WG286590
Login Number: L08100867

Client ID	Date Collected	Date Received	Date Extracted	Max Hold Time Ext.	Time Held Ext.	Date Analyzed	Max Hold Time Anal	Time Held Anal.	Q
46WW04-102708	10/27/08	10/30/08	10/31/08	180	3.68	10/31/08	180	0.423	
46WW04-102708	10/27/08	10/30/08	10/31/08	180	3.68	11/03/08	180	3.41	
LHSMW15-102708	10/27/08	10/30/08	10/31/08	180	3.71	11/03/08	180	3.40	
LHSMW23-102808	10/28/08	10/30/08	10/31/08	180	2.80	10/31/08	180	0.411	
LHSMW11-102708	10/27/08	10/30/08	10/31/08	180	3.77	10/31/08	180	0.415	
LHSMW23-102808	10/28/08	10/30/08	10/31/08	180	2.80	11/03/08	180	3.40	
LHSMW11-102708	10/27/08	10/30/08	10/31/08	180	3.77	11/03/08	180	3.40	
LHSMW15-102708	10/27/08	10/30/08	10/31/08	180	3.71	10/31/08	180	0.419	

* EXT = SEE PROJECT QAPP REQUIREMENTS
*ANAL = SEE PROJECT QAPP REQUIREMENTS

HOLD_TIMES - Modified 03/06/2008
PDF File ID: 1238429
Report generated 11/04/2008 09:50

Microbac®

Microbac Laboratories Inc.

00077609

METHOD BLANK SUMMARY

Login Number: L08100867
Blank File ID: EL.103108.152348
Prep Date: 10/31/08 06:47
Analyzed Date: 10/31/08 15:23
Analyst: JYH

Work Group: WG286590
Blank Sample ID: WG286552-02
Instrument ID: ELAN-ICP
Method: 6020

This Method Blank Applies To The Following Samples:

Client ID	Lab Sample ID	Lab File ID	Time Analyzed	TAG
LCS	WG286552-03	EL.103108.152908	10/31/08 15:29	01
DUP	WG286552-06	EL.103108.155032	10/31/08 15:50	01
LHSMW23-102808	L08100867-05	EL.103108.163933	10/31/08 16:39	01
LHSMW11-102708	L08100867-07	EL.103108.164454	10/31/08 16:44	01
LHSMW15-102708	L08100867-09	EL.103108.165015	10/31/08 16:50	01
46WW04-102708	L08100867-10	EL.103108.165536	10/31/08 16:55	01
LHSMW23-102808	L08100867-05	EL.110308.161803	11/03/08 16:18	DL01
LHSMW11-102708	L08100867-07	EL.110308.162324	11/03/08 16:23	DL01
LHSMW15-102708	L08100867-09	EL.110308.162845	11/03/08 16:28	DL01
46WW04-102708	L08100867-10	EL.110308.163407	11/03/08 16:34	DL01

Report Name: BLANK_SUMMARY
PDF File ID: 1238430
Report generated 11/04/2008 09:50

Microbac®

Microbac Laboratories Inc.

METHOD BLANK REPORT

00077610

Login Number: L08100867 Prep Date: 10/31/08 06:47 Sample ID: WG286552-02
Instrument ID: ELAN-ICP Run Date: 10/31/08 15:23 Prep Method: 3015
File ID: EL.103108.152348 Analyst: JYH Method: 6020
Workgroup (AAB#): WG286590 Matrix: Water Units: mg/L
Contract #: DACA56-94-D-0020 Cal ID: ELAN-I-31-OCT-08

Analytes	SDL	PQL	Concentration	Dilution	Qualifier
Silver, Total	0.000250	0.00100	0.000250	1	U
Arsenic, Total	0.000250	0.00100	0.000250	1	U
Barium, Total	0.000500	0.00300	0.000500	1	U
Cadmium, Total	0.000125	0.000500	0.000125	1	U
Chromium, Total	0.000500	0.00200	0.000500	1	U
Copper, Total	0.000500	0.00200	0.000500	1	U
Lead, Total	0.000250	0.000500	0.000250	1	U
Manganese, Total	0.000500	0.00200	0.000500	1	U
Nickel, Total	0.00100	0.00400	0.00100	1	U
Antimony, Total	0.000250	0.00100	0.000250	1	U
Selenium, Total	0.000500	0.00100	0.000500	1	U
Thallium, Total	0.0000500	0.000200	0.0000500	1	U

SDL Method Detection Limit
PQL Reporting/Practical Quantitation Limit
ND Analyte Not detected at or above reporting limit
* |Analyte concentration| > RL

Report Name: BLANK
PDF ID: 1238431
04-NOV-2008 09:50

Microbac®

Microbac Laboratories Inc.
LABORATORY CONTROL SAMPLE (LCS)

00077611

Login Number: L08100867 Run Date: 10/31/2008 Sample ID: WG286552-03
Instrument ID: ELAN-ICP Run Time: 15:29 Prep Method: 3015
File ID: EL.103108.152908 Analyst: JYH Method: 6020
Workgroup (AAB#): WG286590 Matrix: Water Units: mg/L
QC Key: STD Lot#: STD27101 Cal ID: ELAN-I-31-OCT-08

Analytes	Expected	Found	% Rec	LCS Limits	Q
Silver, Total	0.0625	0.0605	96.8	80 - 120	
Arsenic, Total	0.0625	0.0603	96.5	80 - 120	
Barium, Total	0.0625	0.0600	95.9	80 - 120	
Cadmium, Total	0.0625	0.0607	97.1	80 - 120	
Chromium, Total	0.0625	0.0610	97.6	80 - 120	
Copper, Total	0.0625	0.0621	99.3	80 - 120	
Lead, Total	0.0625	0.0594	95.0	80 - 120	
Manganese, Total	0.0625	0.0608	97.3	80 - 120	
Nickel, Total	0.0625	0.0625	100	80 - 120	
Antimony, Total	0.0625	0.0609	97.5	80 - 120	
Selenium, Total	0.0625	0.0622	99.6	80 - 120	
Thallium, Total	0.0625	0.0588	94.1	80 - 120	

LCS - Modified 03/06/2008
PDF File ID: 1238432
Report generated: 11/04/2008 09:50

Microbac®

Microbac Laboratories Inc.
MATRIX SPIKE AND MATRIX SPIKE DUP (MS/MSD)

00077612

Loginnum: L08100867 Cal ID: ELAN-ICP- Worknum: WG286590
Instrument ID: ELAN-ICP Contract #: DACA56-94-D-0020 Method: 6020
Parent ID: WG286552-01 File ID: EL.103108.153428 Dil: 1 Matrix: WATER
Sample ID: WG286552-04 MS File ID: EL.103108.153949 Dil: 1 Units: mg/L
Sample ID: WG286552-05 MSD File ID: EL.103108.154511 Dil: 1

Analyte	Parent	MS Spiked	MS Found	MS %Rec	MSD Spiked	MSD Found	MSD %Rec	%RPD	%Rec Limits	RPD Limit	Q
Antimony	0.000352	0.0625	0.0673	107	0.0625	0.0674	107	0.153	75 - 125	20	
Arsenic	0.00234	0.0625	0.0644	99.2	0.0625	0.0651	100	1.19	75 - 125	20	
Barium	0.0673	0.0625	0.133	105	0.0625	0.138	113	3.50	75 - 125	20	
Cadmium	ND	0.0625	0.0629	101	0.0625	0.0631	101	0.263	75 - 125	20	
Chromium	0.00112	0.0625	0.0656	103	0.0625	0.0666	105	1.42	75 - 125	20	
Copper	0.00145	0.0625	0.0642	100	0.0625	0.0658	103	2.47	75 - 125	20	
Lead	ND	0.0625	0.0659	105	0.0625	0.0670	107	1.61	75 - 125	20	
Nickel	0.00290	0.0625	0.0654	100	0.0625	0.0674	103	2.95	75 - 125	20	
Selenium	0.0251	0.0625	0.0842	94.4	0.0625	0.0846	95.2	0.570	75 - 125	20	
Silver	ND	0.0625	0.0615	98.5	0.0625	0.0632	101	2.66	75 - 125	20	
Thallium	ND	0.0625	0.0661	106	0.0625	0.0671	107	1.52	75 - 125	20	

* FAILS %REC LIMIT

FAILS RPD LIMIT

NOTE: This is an internal quality control sample.

WG_MS_MSD_DRYWT - Modified 03/07/2008
PDF File ID: 1238433
Report generated 11/04/2008 09:50

Microbac®

Microbac Laboratories Inc.
Serial Dilution Report

Login: L08100867 **Worknum:** WG286590
Instrument: ELAN-ICP **Method:** 6020
Serial Dil: WG286590-02 **File ID:** EL.103108.161201 **Dil:** 5 **Units:** ug/L
Sample: L08100808-33 **File ID:** EL.103108.160116 **Dil:** 1

Analyte	Sample	Qual	Serial Dil	Qual	% Diff	Q
Antimony	ND	U	ND	U		
Arsenic	ND	U	.515	F	698.00	
Barium	.278	F	ND	U		
Cadmium	ND	U	ND	U		
Chromium	.359	F	ND	U		
Copper	1.49	X	1.735	F	16.40	
Lead	ND	U	ND	U		
Manganese	.526	F	ND	U		
Nickel	ND	U	ND	U		
Selenium	ND	U	ND	U		
Silver	ND	U	ND	U		
Thallium	ND	U	ND	U		

U = Result is below MDL.
F = Result is greater than or equal to MDL and less than the RL.
X = Result is greater than or equal to RL and less than 100 times the MDL.
E = %D exceeds control limit of 10% and initial sample result is greater than or equal to 100 times the MDL.

SERIAL_DIL - Modified 09/22/2008
PDF File ID: 1238427
11/04/2008 09:50

Microbac Laboratories Inc.
POST SPIKE REPORT

00077614

Sample Login ID: L08100867 **Worknum:** WG286590
Instrument ID: ELAN-ICP **Method:** 6020
Post Spike ID: WG286590-01 **File ID:** EL.103108.160639 **Dil:** 1 **Units:** ug/L
Sample ID: L08100808-33 **File ID:** EL.103108.160116 **Dil:** 1 **Matrix:** Water

Analyte	Post Spike Result	C	Sample Result	C	Spike Added(SA)	% R	Control Limit %R	Q
ANTIMONY	50.5		0	U	50	101.0	75 - 125	
ARSENIC	46.0		0	U	50	91.9	75 - 125	
BARIUM	52.2		0.278	F	50	103.9	75 - 125	
CADMIUM	49.1		0	U	50	98.2	75 - 125	
CHROMIUM	51.4		0.359	F	50	102.0	75 - 125	
COPPER	53.1		1.49		50	103.1	75 - 125	
LEAD	51.2		0	U	50	102.3	75 - 125	
MANGANESE	51.1		0.526	F	50	101.2	75 - 125	
NICKEL	51.1		0	U	50	102.2	75 - 125	
SELENIUM	44.9		0	U	50	89.7	75 - 125	
SILVER	50.5		0	U	50	101.0	75 - 125	
THALLIUM	50.1		0	U	50	100.2	75 - 125	

N = % Recovery exceeds control limits
F = Result is between MDL and RL
U = Sample result is below MDL. A value of zero is used in the calculation

POST_SPIKE - Modified 03/06/2008
PDF File ID: 1238428
Report generated: 11/04/2008 09:50

Microbac Laboratories Inc.
Initial Calibration Summary

00077615

Login:	L08100867	Workgroup (AAB#):	WG286590
Analytical Method:	6020	Instrument ID:	ELAN-ICP
ICAL Worknum:	WG286693	Initial Calibration Date:	31-OCT-2008 14:32

	WG286693-01		WG286693-02		WG286693-03		WG286693-04			
	Conc	INT	Conc	INT	Conc	INT	Conc	INT	R	Q
ANTIMONY	0	144	.4	2850	50	260000	100	497000	1	
ARSENIC	0	-151	.4	440	50	77100	100	149000	.999984	
BARIUM	0	28.7	.4	1070	50	127000	100	247000	.999987	
CADMIUM	0	-5.97	.4	615	50	75300	100	142000	.999974	
CHROMIUM	0	11300	.4	15400	50	408000	100	789000	.99999	
COPPER	0	219	.4	1210	50	118000	100	224000	.999911	
LEAD	0	379	.4	13000	50	1520000	100	3010000	.999996	
MANGANESE	0	648	.4	4980	50	543000	100	1040000	.999949	
NICKEL	0	51.7	.4	912	50	103000	100	196000	.999932	
SELENIUM	0	7.81	.4	46.5	50	6250	100	11800	.999881	
SILVER	0	24.7	.4	2930	50	357000	100	689000	.999995	
THALLIUM	0	50.0	.4	4010	50	471000	100	939000	1	

INT = Instrument intensity
R = Coefficient of correlation
Q = Data Qualifier
*** = Out of Compliance; R < 0.995**

INT_CAL_ICP - Modified 03/06/2008
PDF File ID: 1238437
Report generated: 04-NOV-2008 09:50

Microbac®

Microbac Laboratories Inc.
Initial Calibration Summary

00077616

Login:	L08100867	Workgroup (AAB#):	WG286590
Analytical Method:	6020	Instrument ID:	ELAN-ICP
ICAL Worknum:	WG286854	Initial Calibration Date:	03-NOV-2008 11:19

	WG286854-01		WG286854-02		WG286854-03		WG286854-04			
	Conc	INT	Conc	INT	Conc	INT	Conc	INT	R	Q
ANTIMONY	0	84.4	.4	2980	50	277000	100	534000	.999761	
ARSENIC	0	-130	.4	559	50	92600	100	174000	.999908	
BARIUM	0	32.0	.4	1080	50	124000	100	240000	.999979	
CADMIUM	0	1.35	.4	792	50	90100	100	172000	.999874	
CHROMIUM	0	12100	.4	16600	50	531000	100	954000	.999999	
COPPER	0	1300	.4	2590	50	160000	100	290000	1	
LEAD	0	466	.4	13100	50	1480000	100	2820000	.999937	
MANGANESE	0	1360	.4	7900	50	772000	100	1400000	.999998	
NICKEL	0	37.7	.4	1240	50	137000	100	250000	1	
SELENIUM	0	26.1	.4	48.2	50	7850	100	14900	.99982	
SILVER	0	97.7	.4	3710	50	432000	100	805000	.999992	
THALLIUM	0	28.0	.4	3800	50	452000	100	859000	.99994	

INT = Instrument intensity
R = Coefficient of correlation
Q = Data Qualifier
*** = Out of Compliance; R < 0.995**

INT_CAL_ICP - Modified 03/06/2008
PDF File ID: 1238437
Report generated: 04-NOV-2008 09:50

Microbac®

Microbac Laboratories Inc.
INITIAL CALIBRATION BLANK (ICB)

Login Number: L08100867
Run Date: 10/31/2008
Sample ID: WG286693-06
Instrument ID: ELAN-ICP
Run Time: 14:44
Method: 6020
File ID: EL.103108.144406
Analyst: JYH
Units: ug/L
Workgroup (AAB#): WG286590
Cal ID: ELAN-ICP - 31-OCT-08
Matrix: WATER

Analytes	MDL	RDL	Concentration	Qualifier
SILVER	.1	.4	.1	U
ARSENIC	.1	.4	.1	U
BARIUM	.2	1.2	.2	U
CADMIUM	.05	.2	.05	U
CHROMIUM	.2	.8	.2	U
COPPER	.2	.8	.2	U
MANGANESE	.2	.8	.2	U
NICKEL	.4	1.6	.4	U
LEAD	.1	.2	.1	U
ANTIMONY	.1	.4	.175	F
SELENIUM	.2	.4	.2	U
THALLIUM	.02	.08	.02	U

ICB - Modified 03/06/2008
PDF File ID: 1238439
Report generated 11/04/2008 09:50

Microbac

Microbac Laboratories Inc.
INITIAL CALIBRATION BLANK (ICB)

00077618

Login Number: L08100867
Run Date: 11/03/2008
Sample ID: WG286854-06
Instrument ID: ELAN-ICP
Run Time: 11:31
Method: 6020
File ID: EL.110308.113110
Analyst: JYH
Units: ug/L
Workgroup (AAB#): WG286590
Cal ID: ELAN-ICP - 03-NOV-08
Matrix: WATER

Analytes	MDL	RDL	Concentration	Qualifier
SILVER	.1	.4	.1	U
ARSENIC	.1	.4	.1	U
BARIUM	.2	1.2	.2	U
CADMIUM	.05	.2	.05	U
CHROMIUM	.2	.8	.2	U
COPPER	.2	.8	.2	U
MANGANESE	.2	.8	.2	U
NICKEL	.4	1.6	.4	U
LEAD	.1	.2	.1	U
ANTIMONY	.1	.4	.183	F
SELENIUM	.2	.4	.2	U
THALLIUM	.02	.08	.02	U

ICB - Modified 03/06/2008
PDF File ID: 1238439
Report generated 11/04/2008 09:50

Microbac

Microbac Laboratories Inc.
CONTINUING CALIBRATION BLANK (CCB)

00077619

Login Number: L08100867
Run Date: 10/31/2008
Sample ID: WG286693-12
Instrument ID: ELAN-ICP
Run Time: 15:18
Method: 6020
File ID: EL.103108.151828
Analyst: JYH
Units: ug/L
Workgroup (AAB#): WG286590
Cal ID: ELAN-I - 31-OCT-08
Matrix: WATER

Analytes	MDL	RDL	Concentration	Qualifier
Silver	0.100	0.400	0.100	U
Arsenic	0.100	0.400	0.100	U
Barium	0.200	1.20	0.200	U
Cadmium	0.0500	0.200	0.0500	U
Chromium	0.200	0.800	0.200	U
Copper	0.200	0.800	0.200	U
Lead	0.100	0.200	0.100	U
Manganese	0.200	0.800	0.200	U
Nickel	0.400	1.60	0.400	U
Antimony	0.100	0.400	0.121	F
Selenium	0.200	0.400	0.200	U
Thallium	0.0200	0.0800	0.0200	U

U = Result is less than MDL.
F = Result is between MDL and RL.
* = Result is above RL.

CCB - Modified 03/05/2008
PDF File ID: 1238442
Report generated 11/04/2008 09:50

Microbac®

Microbac Laboratories Inc.
CONTINUING CALIBRATION BLANK (CCB)

00077620

Login Number: L08100867 Run Date: 10/31/2008 Sample ID: WG286693-14
Instrument ID: ELAN-ICP Run Time: 16:23 Method: 6020
File ID: EL.103108.162326 Analyst: JYH Units: ug/L
Workgroup (AAB#): WG286590 Cal ID: ELAN-I - 31-OCT-08
Matrix: WATER

Analytes	MDL	RDL	Concentration	Qualifier
Silver	0.100	0.400	0.100	U
Arsenic	0.100	0.400	0.100	U
Barium	0.200	1.20	0.200	U
Cadmium	0.0500	0.200	0.0500	U
Chromium	0.200	0.800	0.200	U
Copper	0.200	0.800	0.200	U
Lead	0.100	0.200	0.100	U
Manganese	0.200	0.800	0.200	U
Nickel	0.400	1.60	0.400	U
Antimony	0.100	0.400	0.100	U
Selenium	0.200	0.400	0.200	U
Thallium	0.0200	0.0800	0.0200	U

U = Result is less than MDL.
F = Result is between MDL and RL.
* = Result is above RL.

CCB - Modified 03/05/2008
PDF File ID: 1238442
Report generated 11/04/2008 09:50

Microbac®

Microbac Laboratories Inc.
CONTINUING CALIBRATION BLANK (CCB)

00077621

Login Number: L08100867 Run Date: 10/31/2008 Sample ID: WG286693-16
Instrument ID: ELAN-ICP Run Time: 17:28 Method: 6020
File ID: EL.103108.172829 Analyst: JYH Units: ug/L
Workgroup (AAB#): WG286590 Cal ID: ELAN-I - 31-OCT-08
Matrix: WATER

Analytes	MDL	RDL	Concentration	Qualifier
Silver	0.100	0.400	0.100	U
Arsenic	0.100	0.400	0.100	U
Barium	0.200	1.20	0.200	U
Cadmium	0.0500	0.200	0.0500	U
Chromium	0.200	0.800	0.262	U
Copper	0.200	0.800	0.200	U
Lead	0.100	0.200	0.100	U
Manganese	0.200	0.800	0.200	U
Nickel	0.400	1.60	0.400	U
Antimony	0.100	0.400	0.100	U
Selenium	0.200	0.400	0.200	U
Thallium	0.0200	0.0800	0.0200	U

U = Result is less than MDL.
F = Result is between MDL and RL.
* = Result is above RL.

CCB - Modified 03/05/2008
PDF File ID: 1238442
Report generated 11/04/2008 09:50

Microbac®

Microbac Laboratories Inc.
CONTINUING CALIBRATION BLANK (CCB)

00077622

Login Number: L08100867 Run Date: 11/03/2008 Sample ID: WG286854-12
Instrument ID: ELAN-ICP Run Time: 12:05 Method: 6020
File ID: EL.110308.120532 Analyst: JYH Units: ug/L
Workgroup (AAB#): WG286590 Cal ID: ELAN-I - 03-NOV-08
Matrix: WATER

Analytes	MDL	RDL	Concentration	Qualifier
Silver	0.100	0.400	0.100	U
Arsenic	0.100	0.400	0.100	U
Barium	0.200	1.20	0.200	U
Cadmium	0.0500	0.200	0.0500	U
Chromium	0.200	0.800	0.200	U
Copper	0.200	0.800	0.200	U
Lead	0.100	0.200	0.100	U
Manganese	0.200	0.800	0.200	U
Nickel	0.400	1.60	0.400	U
Antimony	0.100	0.400	0.151	F
Selenium	0.200	0.400	0.200	U
Thallium	0.0200	0.0800	0.0200	U

U = Result is less than MDL.
F = Result is between MDL and RL.
* = Result is above RL.

CCB - Modified 03/05/2008
PDF File ID: 1238442
Report generated 11/04/2008 09:50

Microbac®

Microbac Laboratories Inc.
CONTINUING CALIBRATION BLANK (CCB)

00077623

Login Number: L08100867 Run Date: 11/03/2008 Sample ID: WG286854-20
Instrument ID: ELAN-ICP Run Time: 16:12 Method: 6020
File ID: EL.110308.161244 Analyst: JYH Units: ug/L
Workgroup (AAB#): WG286590 Cal ID: ELAN-I - 03-NOV-08
Matrix: WATER

Analytes	MDL	RDL	Concentration	Qualifier
Silver	0.100	0.400	0.100	U
Arsenic	0.100	0.400	0.100	U
Barium	0.200	1.20	0.200	U
Cadmium	0.0500	0.200	0.0500	U
Chromium	0.200	0.800	0.200	U
Copper	0.200	0.800	0.289	U
Lead	0.100	0.200	0.100	U
Manganese	0.200	0.800	0.200	U
Nickel	0.400	1.60	0.400	U
Antimony	0.100	0.400	0.111	F
Selenium	0.200	0.400	0.200	U
Thallium	0.0200	0.0800	0.0200	U

U = Result is less than MDL.
F = Result is between MDL and RL.
* = Result is above RL.

CCB - Modified 03/05/2008
PDF File ID: 1238442
Report generated 11/04/2008 09:50

Microbac®

Microbac Laboratories Inc.
CONTINUING CALIBRATION BLANK (CCB)

00077624

Login Number: L08100867 Run Date: 11/03/2008 Sample ID: WG286854-22
Instrument ID: ELAN-ICP Run Time: 16:45 Method: 6020
File ID: EL.110308.164531 Analyst: JYH Units: ug/L
Workgroup (AAB#): WG286590 Cal ID: ELAN-I - 03-NOV-08
Matrix: WATER

Analytes	MDL	RDL	Concentration	Qualifier
Silver	0.100	0.400	0.100	U
Arsenic	0.100	0.400	0.100	U
Barium	0.200	1.20	0.200	U
Cadmium	0.0500	0.200	0.0500	U
Chromium	0.200	0.800	0.200	U
Copper	0.200	0.800	0.284	U
Lead	0.100	0.200	0.100	U
Manganese	0.200	0.800	0.200	U
Nickel	0.400	1.60	0.400	U
Antimony	0.100	0.400	0.108	F
Selenium	0.200	0.400	0.200	U
Thallium	0.0200	0.0800	0.0200	U

U = Result is less than MDL.
F = Result is between MDL and RL.
* = Result is above RL.

CCB - Modified 03/05/2008
PDF File ID: 1238442
Report generated 11/04/2008 09:50

Microbac®

Microbac Laboratories Inc.

INITIAL CALIBRATION VERIFICATION (ICV)
(Alternate Source)

00077625

Login Number: L08100867 Run Date: 10/31/2008 Sample ID: WG286693-05
Instrument ID: ELAN-ICP Run Time: 14:38 Method: 6020
File ID: EL.103108.143825 Analyst: JYH Units: ug/L
Workgroup (AAB#): WG286590 Cal ID: ELAN-I - 31-OCT-08
QC Key: STD

Analyte		Expected	Found	%REC	LIMITS	Q
Silver		50	49.6	99.2	90 - 110	
Arsenic		50	49.7	99.4	90 - 110	
Barium		50	49.0	98.1	90 - 110	
Cadmium		50	49.8	99.6	90 - 110	
Chromium		50	49.6	99.2	90 - 110	
Copper		50	49.4	98.7	90 - 110	
Lead		50	49.2	98.4	90 - 110	
Manganese		50	49.0	97.9	90 - 110	
Nickel		50	50.0	100	90 - 110	
Antimony		50	52.6	105	90 - 110	
Selenium		50	50.7	101	90 - 110	
Thallium		50	49.0	98.1	90 - 110	

* Exceeds LIMITS Limit

ICV - Modified 03/06/2008
PDF File ID: 1238438
Report generated 11/04/2008 09:50

Microbac®

Microbac Laboratories Inc.

INITIAL CALIBRATION VERIFICATION (ICV)
(Alternate Source)

00077626

Login Number: L08100867 Run Date: 11/03/2008 Sample ID: WG286854-05
Instrument ID: ELAN-ICP Run Time: 11:25 Method: 6020
File ID: EL.110308.112528 Analyst: JYH Units: ug/L
Workgroup (AAB#): WG286590 Cal ID: ELAN-I - 03-NOV-08
QC Key: STD

Analyte		Expected	Found	%REC	LIMITS	Q
Silver		50	50.7	101	90 - 110	
Arsenic		50	51.4	103	90 - 110	
Barium		50	50.2	100	90 - 110	
Cadmium		50	49.9	99.9	90 - 110	
Chromium		50	49.9	99.8	90 - 110	
Copper		50	51.0	102	90 - 110	
Lead		50	50.7	101	90 - 110	
Manganese		50	50.4	101	90 - 110	
Nickel		50	51.2	102	90 - 110	
Antimony		50	52.5	105	90 - 110	
Selenium		50	51.5	103	90 - 110	
Thallium		50	50.9	102	90 - 110	

* Exceeds LIMITS Limit

ICV - Modified 03/06/2008
PDF File ID: 1238438
Report generated 11/04/2008 09:50

Microbac®

Microbac Laboratories Inc.
CONTINUING CALIBRATION VERIFICATION (CCV)

00077627

Login Number: L08100867
Run Date: 10/31/2008
Sample ID: WG286693-11
Instrument ID: ELAN-ICP
Run Time: 15:12
Method: 6020
File ID: EL.103108.151247
Analyst: JYH
QC Key: STD
Workgroup (AAB#): WG286590
Cal ID: ELAN-I - 31-OCT-08
Matrix: WATER

Analyte		Expected	Found	UNITS	%REC	LIMITS		Q
Silver		50.0	49.6	ug/L	99.2	90 - 110		
Arsenic		50.0	49.5	ug/L	99.0	90 - 110		
Barium		50.0	50.5	ug/L	101	90 - 110		
Cadmium		50.0	50.0	ug/L	100	90 - 110		
Chromium		50.0	49.9	ug/L	99.9	90 - 110		
Copper		50.0	48.9	ug/L	97.8	90 - 110		
Lead		50.0	49.4	ug/L	98.7	90 - 110		
Manganese		50.0	50.2	ug/L	100	90 - 110		
Nickel		50.0	49.4	ug/L	98.8	90 - 110		
Antimony		50.0	52.1	ug/L	104	90 - 110		
Selenium		50.0	51.3	ug/L	103	90 - 110		
Thallium		50.0	49.7	ug/L	99.3	90 - 110		

* Exceeds LIMITS Criteria

CCV - Modified 03/05/2008
PDF File ID: 1238441
Report generated 11/04/2008 09:50

Microbac®

Microbac Laboratories Inc.
CONTINUING CALIBRATION VERIFICATION (CCV)

00077628

Login Number: L08100867
Run Date: 10/31/2008
Sample ID: WG286693-13
Instrument ID: ELAN-ICP
Run Time: 16:17
Method: 6020
File ID: EL.103108.161744
Analyst: JYH
QC Key: STD
Workgroup (AAB#): WG286590
Cal ID: ELAN-I - 31-OCT-08
Matrix: WATER

Analyte		Expected	Found	UNITS	%REC	LIMITS		Q
Silver		50.0	50.6	ug/L	101	90 - 110		
Arsenic		50.0	50.5	ug/L	101	90 - 110		
Barium		50.0	51.4	ug/L	103	90 - 110		
Cadmium		50.0	49.2	ug/L	98.5	90 - 110		
Chromium		50.0	49.9	ug/L	99.7	90 - 110		
Copper		50.0	49.3	ug/L	98.6	90 - 110		
Lead		50.0	50.2	ug/L	100	90 - 110		
Manganese		50.0	50.2	ug/L	100	90 - 110		
Nickel		50.0	49.6	ug/L	99.3	90 - 110		
Antimony		50.0	52.0	ug/L	104	90 - 110		
Selenium		50.0	51.4	ug/L	103	90 - 110		
Thallium		50.0	49.7	ug/L	99.5	90 - 110		

* Exceeds LIMITS Criteria

CCV - Modified 03/05/2008
PDF File ID: 1238441
Report generated 11/04/2008 09:50

Microbac®

Microbac Laboratories Inc.
CONTINUING CALIBRATION VERIFICATION (CCV)

00077629

Login Number: L08100867 Run Date: 10/31/2008 Sample ID: WG286693-15
Instrument ID: ELAN-ICP Run Time: 17:22 Method: 6020
File ID: EL.103108.172247 Analyst: JYH QC Key: STD
Workgroup (AAB#): WG286590 Cal ID: ELAN-I - 31-OCT-08
Matrix: WATER

Analyte		Expected	Found	UNITS	%REC	LIMITS		Q
Silver		50.0	49.2	ug/L	98.5	90 - 110		
Arsenic		50.0	49.1	ug/L	98.2	90 - 110		
Barium		50.0	51.0	ug/L	102	90 - 110		
Cadmium		50.0	49.8	ug/L	99.6	90 - 110		
Chromium		50.0	47.1	ug/L	94.1	90 - 110		
Copper		50.0	49.8	ug/L	99.6	90 - 110		
Lead		50.0	49.5	ug/L	99.0	90 - 110		
Manganese		50.0	48.8	ug/L	97.6	90 - 110		
Nickel		50.0	48.4	ug/L	96.7	90 - 110		
Antimony		50.0	51.2	ug/L	102	90 - 110		
Selenium		50.0	50.7	ug/L	101	90 - 110		
Thallium		50.0	48.6	ug/L	97.3	90 - 110		

* Exceeds LIMITS Criteria

CCV - Modified 03/05/2008
PDF File ID: 1238441
Report generated 11/04/2008 09:50

Microbac®

Microbac Laboratories Inc.
CONTINUING CALIBRATION VERIFICATION (CCV)

00077630

Login Number: L08100867 Run Date: 11/03/2008 Sample ID: WG286854-11
Instrument ID: ELAN-ICP Run Time: 11:59 Method: 6020
File ID: EL.110308.115950 Analyst: JYH QC Key: STD
Workgroup (AAB#): WG286590 Cal ID: ELAN-I - 03-NOV-08
Matrix: WATER

Analyte		Expected	Found	UNITS	%REC	LIMITS		Q
Silver		50.0	51.2	ug/L	102	90 - 110		
Arsenic		50.0	50.6	ug/L	101	90 - 110		
Barium		50.0	51.0	ug/L	102	90 - 110		
Cadmium		50.0	49.4	ug/L	98.8	90 - 110		
Chromium		50.0	50.3	ug/L	101	90 - 110		
Copper		50.0	51.1	ug/L	102	90 - 110		
Lead		50.0	50.3	ug/L	101	90 - 110		
Manganese		50.0	51.1	ug/L	102	90 - 110		
Nickel		50.0	50.7	ug/L	101	90 - 110		
Antimony		50.0	52.6	ug/L	105	90 - 110		
Selenium		50.0	52.1	ug/L	104	90 - 110		
Thallium		50.0	50.5	ug/L	101	90 - 110		

* Exceeds LIMITS Criteria

CCV - Modified 03/05/2008
PDF File ID: 1238441
Report generated 11/04/2008 09:50

Microbac®

Microbac Laboratories Inc.
CONTINUING CALIBRATION VERIFICATION (CCV)

00077631

Login Number: L08100867 Run Date: 11/03/2008 Sample ID: WG286854-19
Instrument ID: ELAN-ICP Run Time: 16:07 Method: 6020
File ID: EL.110308.160702 Analyst: JYH QC Key: STD
Workgroup (AAB#): WG286590 Cal ID: ELAN-I - 03-NOV-08
Matrix: WATER

Analyte		Expected	Found	UNITS	%REC	LIMITS		Q
Silver		50.0	49.7	ug/L	99.4	90 - 110		
Arsenic		50.0	53.1	ug/L	106	90 - 110		
Barium		50.0	47.3	ug/L	94.6	90 - 110		
Cadmium		50.0	49.3	ug/L	98.5	90 - 110		
Chromium		50.0	48.5	ug/L	97.1	90 - 110		
Copper		50.0	50.4	ug/L	101	90 - 110		
Lead		50.0	50.4	ug/L	101	90 - 110		
Manganese		50.0	46.2	ug/L	92.4	90 - 110		
Nickel		50.0	51.0	ug/L	102	90 - 110		
Antimony		50.0	53.0	ug/L	106	90 - 110		
Selenium		50.0	52.5	ug/L	105	90 - 110		
Thallium		50.0	52.2	ug/L	104	90 - 110		

* Exceeds LIMITS Criteria

CCV - Modified 03/05/2008
PDF File ID: 1238441
Report generated 11/04/2008 09:50

Microbac®

Microbac Laboratories Inc.
CONTINUING CALIBRATION VERIFICATION (CCV)

00077632

Login Number: L08100867 Run Date: 11/03/2008 Sample ID: WG286854-21
Instrument ID: ELAN-ICP Run Time: 16:39 Method: 6020
File ID: EL.110308.163949 Analyst: JYH QC Key: STD
Workgroup (AAB#): WG286590 Cal ID: ELAN-I - 03-NOV-08
Matrix: WATER

Analyte		Expected	Found	UNITS	%REC	LIMITS		Q
Silver		50.0	49.9	ug/L	99.8	90 - 110		
Arsenic		50.0	53.0	ug/L	106	90 - 110		
Barium		50.0	48.8	ug/L	97.7	90 - 110		
Cadmium		50.0	50.8	ug/L	102	90 - 110		
Chromium		50.0	48.7	ug/L	97.4	90 - 110		
Copper		50.0	50.8	ug/L	102	90 - 110		
Lead		50.0	50.9	ug/L	102	90 - 110		
Manganese		50.0	47.2	ug/L	94.3	90 - 110		
Nickel		50.0	50.6	ug/L	101	90 - 110		
Antimony		50.0	52.3	ug/L	105	90 - 110		
Selenium		50.0	53.4	ug/L	107	90 - 110		
Thallium		50.0	52.6	ug/L	105	90 - 110		

* Exceeds LIMITS Criteria

CCV - Modified 03/05/2008
PDF File ID: 1238441
Report generated 11/04/2008 09:50

Microbac®

Microbac Laboratories Inc.
INTERFERENCE CHECK SAMPLES

00077633

Login number: L08100867
Instrument ID: ELAN-ICP
Sol. A : WG286693-09 **File ID:** EL.103108.150119
Sol. AB : WG286693-10 **File ID:** EL.103108.150703

Workgroup (AAB#): WG286590
Method: 6020
Units: ug/L
Matrix: Water

	Sol. A			Sol. AB			
ANALYTE	True	Found	%Recovery	True	Found	%Recovery	Q
Antimony	NS	-0.0717	NS	100	103	103	
Arsenic	NS	-0.00170	NS	100	99.5	99.5	
Barium	NS	0.0603	NS	100	99.4	99.4	
Cadmium	NS	0.0864	NS	100	97.9	97.9	
Chromium	NS	-0.183	NS	100	94.3	94.3	
Copper	NS	0.122	NS	100	91.5	91.5	
Lead	NS	-0.00860	NS	100	96.9	96.9	
Manganese	NS	0.228	NS	100	95.9	95.9	
Nickel	NS	0.807	NS	100	94.8	94.8	
Selenium	NS	-0.160	NS	100	106	106	
Silver	NS	0.0129	NS	100	94.4	94.4	
Thallium	NS	-0.00640	NS	100	96.7	96.7	

NS = Not spiked
*** = Recovery of spiked element is outside acceptance limit of 80% - 120% of true value.**
 # = Result for unspiked element is outside the acceptance limits of (+/-) the project reporting limit (RL).

ICS - Modified 03/06/2008
PDF File ID: 1238440
Report generated 11/04/2008 09:50

Microbac Laboratories Inc.
INTERFERENCE CHECK SAMPLES

00077634

Login number: L08100867
Instrument ID: ELAN-ICP
Sol. A : WG286854-09 **File ID:** EL.110308.114823
Sol. AB : WG286854-10 **File ID:** EL.110308.115407

Workgroup (AAB#): WG286590
Method: 6020
Units: ug/L
Matrix: Water

	Sol. A			Sol. AB			
ANALYTE	True	Found	%Recovery	True	Found	%Recovery	Q
Antimony	NS	-0.0419	NS	100	107	107	
Arsenic	NS	0.0207	NS	100	104	104	
Barium	NS	0.124	NS	100	99.9	99.9	
Cadmium	NS	0.0981	NS	100	102	102	
Chromium	NS	0.0779	NS	100	96.3	96.3	
Copper	NS	0.162	NS	100	97.8	97.8	
Lead	NS	0.0715	NS	100	101	101	
Manganese	NS	0.218	NS	100	98.1	98.1	
Nickel	NS	0.726	NS	100	97.3	97.3	
Selenium	NS	0.140	NS	100	111	111	
Silver	NS	-0.000700	NS	100	92.7	92.7	
Thallium	NS	0.0143	NS	100	101	101	

NS = Not spiked
*** = Recovery of spiked element is outside acceptance limit of 80% - 120% of true value.**
 # = Result for unspiked element is outside the acceptance limits of (+/-) the project reporting limit (RL).

ICS - Modified 03/06/2008
PDF File ID: 1238440
Report generated 11/04/2008 09:50

Microbac Laboratories Inc.
CRI SAMPLE

00077635

Login Number: L08100867 Run Date: 10/31/2008 Sample ID: WG286693-08
Instrument ID: ELAN-ICP Run Time: 14:55 Prep Method: 3015
File ID: EL.103108.145535 Analyst: JYH Method: 6020
Workgroup (AAB#): WG286693 Matrix: Water Units: ug/L
Contract #: DACA56-94-D-0020 Cal ID: ELAN-ICP-31-OCT-2008 14:32

Analytes	Expected	Found	% Rec	Limits	Q
Cadmium, Total	0.200	0.217	109	50 - 150	
Thallium, Total	0.0800	0.0666	83.3	50 - 150	

CRI - Modified 03/06/2008
PDF File ID: 1238435
Report generated 11/04/2008 09:50

Microbac®

Microbac Laboratories Inc.
CRI SAMPLE

00077636

Login Number: L08100867 Run Date: 11/03/2008 Sample ID: WG286854-08
Instrument ID: ELAN-ICP Run Time: 11:42 Prep Method: 3015
File ID: EL.110308.114238 Analyst: JYH Method: 6020
Workgroup (AAB#): WG286854 Matrix: Water Units: ug/L
Contract #: DACA56-94-D-0020 Cal ID: ELAN-ICP-03-NOV-2008 11:19

Analytes	Expected	Found	% Rec	Limits	Q
Cadmium, Total	0.200	0.176	88.0	50 - 150	
Thallium, Total	0.0800	0.0619	77.4	50 - 150	

CRI - Modified 03/06/2008
PDF File ID: 1238435
Report generated 11/04/2008 09:50

Microbac®

Microbac Laboratories Inc.

INTERNAL STANDARD REPORT

Login: L08100867 **Analytical Method:** 6020
Analytical Workgroup: WG286590 **Matrix:** 1
Instrument: ELAN-ICP **Analyst:** JYH
ICAL Date: 31-OCT-2008 14:15

			BISMUTH	GERMANIUM	INDIUM	TERBIUM
Sample	Type	Run Date	% Rec	% Rec	% Rec	% Rec
L08100808-33	SAMP	31-OCT-2008 16:01	102.667	109.912	107.714	104.017
L08100867-05	SAMP	31-OCT-2008 16:39	86.774	103.98	100.314	94.17
L08100867-07	SAMP	31-OCT-2008 16:44	81.633	95.865	92.48	89.58
L08100867-09	SAMP	31-OCT-2008 16:50	80.623	102.988	98.438	88.21
L08100867-10	SAMP	31-OCT-2008 16:55	85.553	105.884	100.403	91.514
WG286552-01	REF	31-OCT-2008 15:34	98.044	104.371	103.219	102.433
WG286552-02	BLANK	31-OCT-2008 15:23	100.096	98.86	95.925	97.896
WG286552-03	LCS	31-OCT-2008 15:29	99.763	97.276	95.785	97.445
WG286552-04	MS	31-OCT-2008 15:39	93.613	103.199	100.334	100.552
WG286552-05	MSD	31-OCT-2008 15:45	97.06	108.082	106.296	103.246
WG286552-06	DUP	31-OCT-2008 15:50	98.342	109.412	107.46	102.125
WG286590-01	PSPK	31-OCT-2008 16:06	102.146	106.306	106.173	103.332
WG286590-02	SERIAL	31-OCT-2008 16:12	99.371	99.9	99.877	98.654
WG286693-05	ICV	31-OCT-2008 14:38	99.024	92.311	89.812	97.108
WG286693-06	ICB	31-OCT-2008 14:44	97.901	90.656	89.588	96.481
WG286693-11	CCV	31-OCT-2008 15:12	100.518	102.314	98.732	99.637
WG286693-12	CCB	31-OCT-2008 15:18	102.204	100.262	99.648	101.507
WG286693-13	CCV	31-OCT-2008 16:17	95.67	94.869	92.216	94.931
WG286693-14	CCB	31-OCT-2008 16:23	95.703	93.93	92.331	95.456
WG286693-15	CCV	31-OCT-2008 17:22	95.999	98.019	94.873	95.277
WG286693-16	CCB	31-OCT-2008 17:28	94.166	94.673	93.292	92.119

Acceptance criteria: 30% - 120%
Underlined recoveries are out of range

INT_STD_ICPMS - Modified 03/05/2008
PDF File ID: 1238436
Report generated: 11/04/2008 09:50

Microbac Laboratories Inc.

INTERNAL STANDARD REPORT

Login: L08100867 **Analytical Method:** 6020
Analytical Workgroup: WG286590 **Matrix:** 1
Instrument: ELAN-ICP **Analyst:** JYH
ICAL Date: 03-NOV-2008 11:02

			BISMUTH	GERMANIUM	INDIUM	TERBIUM
Sample	**Type**	**Run Date**	**% Rec**	**% Rec**	**% Rec**	**% Rec**
L08100867-05	SAMP	03-NOV-2008 16:18	85.98	61.853	71.618	89.537
L08100867-07	SAMP	03-NOV-2008 16:23	85.614	63.184	72.475	89.799
L08100867-09	SAMP	03-NOV-2008 16:28	87.552	67.398	76.483	91.181
L08100867-10	SAMP	03-NOV-2008 16:34	87.59	68.322	76.994	91.267
WG286854-05	ICV	03-NOV-2008 11:25	94.514	88.973	92.312	96.148
WG286854-06	ICB	03-NOV-2008 11:31	96.866	91.083	93.989	97.46
WG286854-11	CCV	03-NOV-2008 11:59	99.688	96.005	95.261	98.016
WG286854-12	CCB	03-NOV-2008 12:05	97.36	93.225	93.967	96.973
WG286854-19	CCV	03-NOV-2008 16:07	88.897	58.861	68.999	87.398
WG286854-20	CCB	03-NOV-2008 16:12	88.894	58.618	69.286	87.062
WG286854-21	CCV	03-NOV-2008 16:39	88.96	64.217	73.84	88.309
WG286854-22	CCB	03-NOV-2008 16:45	88.349	61.754	73.477	88.6

Acceptance criteria: 30% - 120%
Underlined recoveries are out of range

INT_STD_ICPMS - Modified 03/05/2008
PDF File ID: 1238436
Report generated: 11/04/2008 09:50

Microbac Laboratories Inc.
LINEAR RANGE (QUARTERLY)

Login Number: L08100867 **Date:** 09/11/2008
Insturment ID: ELAN-ICP **Method:** 6020

Analyte	Integration Time (Sec.)	Concentration (ug/L)
Antimony	1.00	100.0
Arsenic	1.00	100.0
Barium	1.00	100.0
Cadmium	1.00	100.0
Chromium	1.00	100.0
Cobalt	1.00	100.0
Copper	1.00	100.0
Lead	1.00	100.0
Manganese	1.00	100.0
Nickel	1.00	100.0
Selenium	1.00	100.0
Silver	1.00	100.0
Thallium	1.00	100.0
Vanadium	1.00	100.0
Zinc	1.00	100.0

Comments:
All analytes passed acceptance criteria at the specified concentration.

LINEAR_RANGE - Modified 03/06/2008
PDF File ID: 1238434
Report generated: 11/04/2008 09:50

2.2.3 Metals CVAA Data (Mercury)

2.2.3.1 Summary Data

LABORATORY REPORT

00077642

L08100867

11/24/08 14:34

Submitted By

Microbac Laboratories Inc.
158 Starlite Drive
Marietta , OH 45750
(740) 373 - 4071

For

Account Name: Shaw E & I, Inc.
ABB Lummus Biulding
3010 Briarpark Drive Suite 4N
Houston, TX 77042
Attention: Jennifer Hoang

Project Number: 2773.025
Project: Longhorn AAP
Site: LONGHORN AAP KARNACK TX
Invoice Number: 597891
P.O. Number: 389869/ 390836(GWTP)

Sample Analysis Summary

Client ID	Lab ID	Method	Dilution	Date Received
LHSMW23-102808	L08100867-05	7470A	1	30-OCT-08
LHSMW11-102708	L08100867-07	7470A	1	30-OCT-08
LHSMW15-102708	L08100867-09	7470A	1	30-OCT-08
46WW04-102708	L08100867-10	7470A	1	30-OCT-08

Report Number: **L08100867**
Report Date : **November 24, 2008**

00077643

Sample Number: **L08100867-05**
Client ID: **LHSMW23-102808**
Matrix: **Water**
Workgroup Number: **WG286889**
Collect Date: **10/28/2008 11:40**
Sample Tag: **01**

PrePrep Method: **NONE**
Prep Method: **7470A**
Analytical Method: **7470A**
Analyst: **ADC**
Dilution: **1**
Units: **mg/L**

Instrument: **HYDRA**
Prep Date: **10/31/2008 07:20**
Cal Date: **11/04/2008 12:48**
Run Date: **11/04/2008 13:32**
File ID: **HY.110408.133252**

Analyte	CAS. Number	Result	Qual	PQL	SDL
Mercury	7439-97-6		U	0.000200	0.000100

U Not detected at or above adjusted sample detection limit

Report Number: **L08100867**
Report Date : **November 24, 2008**

00077644

Sample Number: **L08100867-07**
Client ID: **LHSMW11-102708**
Matrix: **Water**
Workgroup Number: **WG286889**
Collect Date: **10/27/2008 12:15**
Sample Tag: **01**

PrePrep Method: **NONE**
Prep Method: **7470A**
Analytical Method: **7470A**
Analyst: **ADC**
Dilution: **1**
Units: **mg/L**

Instrument: **HYDRA**
Prep Date: **10/31/2008 07:20**
Cal Date: **11/04/2008 12:48**
Run Date: **11/04/2008 13:34**
File ID: **HY.110408.133447**

Analyte	CAS. Number	Result	Qual	PQL	SDL
Mercury	7439-97-6		U	0.000200	0.000100

U Not detected at or above adjusted sample detection limit

Microbac®

Report Number: **L08100867**
Report Date : **November 24, 2008**

00077645

Sample Number: **L08100867-09**
Client ID: **LHSMW15-102708**
Matrix: **Water**
Workgroup Number: **WG286889**
Collect Date: **10/27/2008 13:50**
Sample Tag: **01**

PrePrep Method: **NONE**
Prep Method: **7470A**
Analytical Method: **7470A**
Analyst: **ADC**
Dilution: **1**
Units: **mg/L**

Instrument: **HYDRA**
Prep Date: **10/31/2008 07:20**
Cal Date: **11/04/2008 12:48**
Run Date: **11/04/2008 13:36**
File ID: **HY.110408.133649**

Analyte	CAS. Number	Result	Qual	PQL	SDL
Mercury	7439-97-6	0.000290		0.000200	0.000100

Report Number: **L08100867**
Report Date : **November 24, 2008**

00077646

Sample Number: **L08100867-10**
Client ID: **46WW04-102708**
Matrix: **Water**
Workgroup Number: **WG286889**
Collect Date: **10/27/2008 14:35**
Sample Tag: **01**

PrePrep Method: **NONE**
Prep Method: **7470A**
Analytical Method: **7470A**
Analyst: **ADC**
Dilution: **1**
Units: **mg/L**

Instrument: **HYDRA**
Prep Date: **10/31/2008 07:20**
Cal Date: **11/04/2008 12:48**
Run Date: **11/04/2008 13:38**
File ID: **HY.110408.133843**

Analyte	CAS. Number	Result	Qual	PQL	SDL
Mercury	7439-97-6		U	0.000200	0.000100

U Not detected at or above adjusted sample detection limit

Microbac®

2.2.3.2 QC Summary Data

Example Cold Vapor Mercury Calculations
Hydra AA Mercury Analyzer

1.0 Initial Calibration (ICAL) Parameters
The system performs linear regression from data consisting of a blank and five standards.

2.0 Calculating the concentration (C) of an element in water using data from run log and quantitation report (note:the data system performs this calculation automatically when correction factors have been entered):

$$Cx = Cs \times \frac{Vf}{Vi} \times D$$

Where:	**Example:**
Cs = Concentration computed by the data system (ug/L)	0.1
Vf = Diluted to Volume (mL)	40
Vi = Aliquot Volume (mL)	40
D = Manual dilution factor, if required (10X = 10)	1
Cx = Concentration of element in ppb (ug/L)	0.1

3.0 Calculating the concentration (C) of an element in soil using data from prep log and quantitation report (note: the data system performs this calculation automatically when correction factors have been entered):

$$Cx = Cs \times \frac{Vf}{Ws} \times D$$

Where:	**Example:**
Cs = Concentration computed by the data system (ug/L)	0.1
Vf = Diluted to volume (mL)	40
Ws = Aliquot weight (g)	0.6
D = Manual dilution factor	1
Cx = Concentration of element in ug/kg	6.67

4.0 Adjusting the concentration to dry weight:

$$Cdry = \frac{Cx \times 100}{Px}$$

1 Cx = Concentration calculated as received (wet basis)	6.67
Px = Percent solids of sample (%wt)	80
$Cdry$ = Concentration calculated as dry weight (ug/kg)	8.33

8.33 ug/kg = 0.00833 mg/kg

Microbac Laboratories Inc.
Metals Digest Log

00077649

Workgroup: WG286558
Analyst: REK
Method: 7470A
Run Date: 10/31/2008 07:20
Hotblock Start Temp: 93.4 @ 07:10
Hotblock End Temp: 94.2 @ 09:10

SOP: ME404 Revison 11
Spike Solution: STD29593
Spike Witness: VC
H2SO4 Lot #: COA13254
HNO3 Lot #: COA13347
Digest tubes Lot #: COA13407
KMnO4 1:1 Lot #: RGT13247
K2S2O8 1:1 Lot #: RGT13197
Mercury Water ICV Lot #: STD29595
HG H2O STDS 10PPM Lot #: STD29601

	SAMPLE #	Type	Matrix	Initial Amount	Final Volume	Spike Amount	Due Date
1	WG286558-02	BLANK	1	40 mL	40 mL		
2	WG286510-01	FBLK	17	4 mL	40 mL		
3	WG286558-03	LCS	1	40 mL	40 mL	4 mL	
4	L08100808-33	SAMP	1	40 mL	40 mL		11/07/08
5	L08100808-34	SAMP	17	4 mL	40 mL		11/07/08
6	L08100808-35	SAMP	17	4 mL	40 mL		11/07/08
7	WG286558-01	REF	17	4 mL	40 mL		
8	L08100808-36	SAMP	17	4 mL	40 mL		11/07/08
9	L08100838-01	SAMP	17	4 mL	40 mL		11/07/08
10	L08100840-01	SAMP	17	4 mL	40 mL		11/07/08
11	L08100840-02	SAMP	17	4 mL	40 mL		11/07/08
12	L08100867-05	SAMP	1	40 mL	40 mL		11/10/08
13	L08100867-07	SAMP	1	40 mL	40 mL		11/10/08
14	L08100867-09	SAMP	1	40 mL	40 mL		11/10/08
15	L08100867-10	SAMP	1	40 mL	40 mL		11/10/08
16	WG286558-04	MS	1	4 mL	40 mL	4 mL	
17	WG286558-05	MSD	1	4 mL	40 mL	4 mL	

Analyst: [signature]

Reviewer: Shelly Lent

BLOCK_DIG - Modified 07/22/2008
PDF ID: 1237419
Report generated: 10/31/2008 09:50

Microbac®

Microbac Laboratories Inc.

Instrument Run Log

Instrument: HYDRA Dataset: 110408A.PRN
Analyst1: ADC Analyst2: N/A
Method: 7470A SOP: 404 Rev: 11
Maintenance Log ID: 26495

Calibration Std: STD29601 ICV/CCV Std: STD29595 Post Spike: STD29601
ICSA: N/A ICSAB: N/A

Workgroups: 286889

Comments:

Seq.	File ID	Sample	ID	Prep	Dil	Reference	Date/Time
1	HY.110408.123845	WG287191-01	Calibration Point		1		11/04/08 12:38
2	HY.110408.124032	WG287191-02	Calibration Point		1		11/04/08 12:40
3	HY.110408.124238	WG287191-03	Calibration Point		1		11/04/08 12:42
4	HY.110408.124442	WG287191-04	Calibration Point		1		11/04/08 12:44
5	HY.110408.124626	WG287191-05	Calibration Point		1		11/04/08 12:46
6	HY.110408.124841	WG287191-06	Calibration Point		1		11/04/08 12:48
7	HY.110408.125449	WG287191-07	Initial Calibration Verification		1		11/04/08 12:54
8	HY.110408.125633	WG287191-08	Initial Calib Blank		1		11/04/08 12:56
9	HY.110408.125827	WG287191-09	CCV		1		11/04/08 12:58
10	HY.110408.130022	WG287191-10	CCB		1		11/04/08 13:00
11	HY.110408.130226	WG286558-02	Method/Prep Blank	40/40	1		11/04/08 13:02
12	HY.110408.130423	WG286510-01	Fluid Blank		1		11/04/08 13:04
13	HY.110408.130610	WG286558-03	Laboratory Control Sample	40/40	1		11/04/08 13:06
14	HY.110408.130815	L08100808-33	EB-102808	40/40	1		11/04/08 13:08
15	HY.110408.131012	WG286889-01	Post Digestion Spike		1		11/04/08 13:10
16	HY.110408.131214	L08100808-34	SR-208-5177	4/40	1		11/04/08 13:12
17	HY.110408.131355	WG286889-02	Post Digestion Spike		1		11/04/08 13:13
18	HY.110408.131538	L08100808-35	SR-208-5152	4/40	1		11/04/08 13:15
19	HY.110408.131751	L08100808-36	SR-208-5227	4/40	1		11/04/08 13:17
20	HY.110408.131933	WG286558-04	Matrix Spike	4/40	1		11/04/08 13:19
21	HY.110408.132129	WG287191-11	CCV		1		11/04/08 13:21
22	HY.110408.132311	WG287191-12	CCB		1		11/04/08 13:23
23	HY.110408.132547	WG286558-05	Matrix Spike Duplicate	4/40	1		11/04/08 13:25
24	HY.110408.132731	L08100838-01	GT08058	4/40	1	WG286667-01	11/04/08 13:27
25	HY.110408.132923	L08100840-01	GT080075	4/40	1		11/04/08 13:29
26	HY.110408.133106	L08100840-02	GT080076	4/40	1		11/04/08 13:31
27	HY.110408.133252	L08100867-05	LHSMW23-102808	40/40	1		11/04/08 13:32
28	HY.110408.133447	L08100867-07	LHSMW11-102708	40/40	1		11/04/08 13:34
29	HY.110408.133649	L08100867-09	LHSMW15-102708	40/40	1		11/04/08 13:36
30	HY.110408.133843	L08100867-10	46WW04-102708	40/40	1		11/04/08 13:38
31	HY.110408.134039	WG287191-13	CCV		1		11/04/08 13:40
32	HY.110408.134233	WG287191-14	CCB		1		11/04/08 13:42

Page: 1 Approved: November 06, 2008

Maren Berry

Microbac®

Checklist ID: 33394
00077651

Microbac Laboratories Inc.

Data Checklist

Date: 04-NOV-2008
Analyst: ADC
Analyst: NA
Method: 7470A
Instrument: HYDRA
Curve Workgroup: 287191
Runlog ID: 25131
Analytical Workgroups: 286889

Calibration/Linearity	X
ICV/CCV	X
ICB/CCB	X
ICSA/ICSAB	
CRI	
Blank/LCS	X
MS/MSD	X
Post Spike/Serial Dilution	X
Upload Results	X
Data Qualifiers	
Generate PDF Instrument Data	X
Sign/Annotate PDF Data	X
Upload Curve Data	X
Workgroup Forms	X
Case Narrative	0808, 0867, 0838
Client Forms	X
Level X	
Level 3	0867
Level 4	0808
Check for compliance with method and project specific requirements	X
Check the completeness of reported information	X
Check the information for the report narrative	X
Primary Reviewer	ADC
Secondary Reviewer	MMB
Comments	

Primary Reviewer:
06-NOV-2008

Secondary Reviewer:
06-NOV-2008

CHECKLIST1 - Modified 03/05/2008
Generated: NOV-06-2008 19:00:50

Microbac Laboratories Inc.

HOLDING TIMES
EQUIVALENT TO AFCEE FORM 9

00077652

Analytical Method: 7470A

AAB#: WG286889

Login Number: L08100867

Client ID	Date Collected	Date Received	Date Extracted	Max Hold Time Ext.	Time Held Ext.	Date Analyzed	Max Hold Time Anal	Time Held Anal.	Q
LHSMW23-102808	10/28/08	10/30/08	10/31/08	28	2.82	11/04/08	28	4.26	
LHSMW15-102708	10/27/08	10/30/08	10/31/08	28	3.73	11/04/08	28	4.26	
46WW04-102708	10/27/08	10/30/08	10/31/08	28	3.70	11/04/08	28	4.26	
LHSMW11-102708	10/27/08	10/30/08	10/31/08	28	3.80	11/04/08	28	4.26	

* EXT = SEE PROJECT QAPP REQUIREMENTS
*ANAL = SEE PROJECT QAPP REQUIREMENTS

HOLD_TIMES - Modified 03/06/2008
PDF File ID: 1243182
Report generated 11/06/2008 16:55

Microbac®

Microbac Laboratories Inc.

00077653

METHOD BLANK SUMMARY

Login Number: L08100867
Blank File ID: HY.110408.130226
Prep Date: 10/31/08 07:20
Analyzed Date: 11/04/08 13:02
Analyst: ADC

Work Group: WG286889
Blank Sample ID: WG286558-02
Instrument ID: HYDRA
Method: 7470A

This Method Blank Applies To The Following Samples:

Client ID	Lab Sample ID	Lab File ID	Time Analyzed	TAG
LCS	WG286558-03	HY.110408.130610	11/04/08 13:06	01
LHSMW23-102808	L08100867-05	HY.110408.133252	11/04/08 13:32	01
LHSMW11-102708	L08100867-07	HY.110408.133447	11/04/08 13:34	01
LHSMW15-102708	L08100867-09	HY.110408.133649	11/04/08 13:36	01
46WW04-102708	L08100867-10	HY.110408.133843	11/04/08 13:38	01

Report Name: BLANK_SUMMARY
PDF File ID: 1243183
Report generated 11/06/2008 16:55

Microbac Laboratories Inc.

METHOD BLANK REPORT

00077654

Login Number: L08100867 Prep Date: 10/31/08 07:20 Sample ID: WG286558-02
Instrument ID: HYDRA Run Date: 11/04/08 13:02 Prep Method: 7470A
File ID: HY.110408.130226 Analyst: ADC Method: 7470A
Workgroup (AAB#): WG286889 Matrix: Water Units: mg/L
Contract #: DACA56-94-D-0020 Cal ID: HYDRA-04-NOV-08

Analytes	SDL	PQL	Concentration	Dilution	Qualifier
Mercury	0.000100	0.000200	0.000100	1	U

SDL Method Detection Limit
PQL Reporting/Practical Quantitation Limit
ND Analyte Not detected at or above reporting limit
* |Analyte concentration| > RL

Report Name: BLANK
PDF ID: 1243184
06-NOV-2008 16:55

Microbac Laboratories Inc.
LABORATORY CONTROL SAMPLE (LCS)

00077655

Login Number: L08100867 Run Date: 11/04/2008 Sample ID: WG286558-03
Instrument ID: HYDRA Run Time: 13:06 Prep Method: 7470A
File ID: HY.110408.130610 Analyst: ADC Method: 7470A
Workgroup (AAB#): WG286889 Matrix: Water Units: mg/L
QC Key: STD Lot#: STD29593 Cal ID: HYDRA-04-NOV-08

Analytes	Expected	Found	% Rec	LCS Limits	Q
Mercury	0.00400	0.00379	94.8	85 - 115	

LCS - Modified 03/06/2008
PDF File ID: 1243185
Report generated: 11/06/2008 16:55

Microbac®

Microbac Laboratories Inc.
MATRIX SPIKE AND MATRIX SPIKE DUP (MS/MSD)

00077656

Loginnum: L08100867 Cal ID: HYDRA- Worknum: WG286889
Instrument ID: HYDRA Contract #: DACA56-94-D-0020 Method: 7470A
Parent ID: WG286558-01 File ID: HY.110408.131751 Dil: 1 Matrix: WATER
Sample ID: WG286558-04 MS File ID: HY.110408.131933 Dil: 1 Units: mg/L
Sample ID: WG286558-05 MSD File ID: HY.110408.132547 Dil: 1

Analyte	Parent	MS Spiked	MS Found	MS %Rec	MSD Spiked	MSD Found	MSD %Rec	%RPD	%Rec Limits	RPD Limit	Q
Mercury	ND	0.0400	0.0423	106	0.0400	0.0367	91.8	14.2	85 - 115	20	

* FAILS %REC LIMIT

FAILS RPD LIMIT

NOTE: This is an internal quality control sample.

WG_MS_MSD_DRYWT - Modified 03/07/2008
PDF File ID: 1243186
Report generated 11/06/2008 16:55

Microbac®

Microbac Laboratories Inc.
POST SPIKE REPORT

00077657

Sample Login ID: L08100867 **Worknum:** WG286889
Instrument ID: HYDRA **Method:** 7470A
Post Spike ID: WG286889-01 **File ID:** HY.110408.131012 **Dil:** 1 **Units:** ug/L
Sample ID: L08100808-33 **File ID:** HY.110408.130815 **Dil:** 1 **Matrix:** Water

Analyte	Post Spike Result	C	Sample Result	C	Spike Added(SA)	% R	Control Limit %R	Q
MERCURY	0.966		0	U	1	96.6	85 - 115	

N = % Recovery exceeds control limits
F = Result is between MDL and RL
U = Sample result is below MDL. A value of zero is used in the calculation

POST_SPIKE - Modified 03/06/2008
PDF File ID: 1243181
Report generated: 11/06/2008 16:55

Microbac Laboratories Inc.
POST SPIKE REPORT

00077658

Sample Login ID: L08100867 **Worknum:** WG286889
Instrument ID: HYDRA **Method:** 7470A
Post Spike ID: WG286889-02 **File ID:** HY.110408.131355 **Dil:** 1 **Units:** ug/L
Sample ID: L08100808-34 **File ID:** HY.110408.131214 **Dil:** 1 **Matrix:** Water

Analyte	Post Spike Result	C	Sample Result	C	Spike Added(SA)	% R	Control Limit %R	Q
MERCURY	1.03		0	U	1	103.0	85 - 115	

N = % Recovery exceeds control limits
F = Result is between MDL and RL
U = Sample result is below MDL. A value of zero is used in the calculation

POST_SPIKE - Modified 03/06/2008
PDF File ID: 1243181
Report generated: 11/06/2008 16:55

Microbac Laboratories Inc.

INITIAL CALIBRATION SUMMARY

00077659

Login Number: L08100867
Analytical Method: 7470A
ICAL Worknum: WG287191

Workgroup (AAB#): WG286889
Instrument ID: HYDRA
Initial Calibration Date: 11/04/2008 12:48

Analyte	WG287191-01		WG287191-02		WG287191-03		WG287191-04		WG287191-05		WG287191-06	
	STD	INT	STD	INT	STD	INT	STD	INT	STD	INT	STD	INT
Mercury	0	1401	0.200	14063	1.00	60170	2.00	141019	5.00	327319	10.0	667765

INT = Instrument intensity
R = Coefficient of correlation
Q = Data Qualifier
* = Out of Compliance; R < 0.995

INT_CAL_HG_FU - Modified 03/06/2008
PDF File ID: 1243187
Report generated 11/06/2008 16:56

Microbac®

Microbac Laboratories Inc.

INITIAL CALIBRATION SUMMARY

00077660

Login Number: L08100867
Analytical Method: 7470A
ICAL Worknum: WG287191

Workgroup (AAB#): WG286889
Instrument ID: HYDRA
Initial Calibration Date: 11/04/2008 12:48

Analyte	R	Q
Mercury	1.000	

INT = Instrument intensity
R = Coefficient of correlation
Q = Data Qualifier
* = Out of Compliance; R < 0.995

INT_CAL_HG_FU - Modified 03/06/2008
PDF File ID: 1243187
Report generated 11/06/2008 16:56

Microbac®

Microbac Laboratories Inc.
INITIAL CALIBRATION BLANK (ICB)

Login Number: L08100867
Run Date: 11/04/2008
Sample ID: WG287191-08
Instrument ID: HYDRA
Run Time: 12:56
Method: 7471
File ID: HY.110408.125633
Analyst: ADC
Units: ug/L
Workgroup (AAB#): WG286889
Cal ID: HYDRA - 04-NOV-08
Matrix: WATER

Analytes	MDL	RDL	Concentration	Qualifier
MERCURY	.1	.2	.1	U

ICB - Modified 03/06/2008
PDF File ID: 1243189
Report generated 11/06/2008 16:56

Microbac Laboratories Inc.

CONTINUING CALIBRATION BLANK (CCB)

00077662

Login Number: L08100867 Run Date: 11/04/2008 Sample ID: WG287191-10

Instrument ID: HYDRA Run Time: 13:00 Method: 7470A

File ID: HY.110408.130022 Analyst: ADC Units: ug/L

Workgroup (AAB#): WG286889 Cal ID: HYDRA - 04-NOV-08

Matrix: WATER

Analytes	MDL	RDL	Concentration	Qualifier
Mercury	0.100	0.200	0.100	U

U = Result is less than MDL.
F = Result is between MDL and RL.
* = Result is above RL.

CCB - Modified 03/05/2008
PDF File ID: 1243191
Report generated 11/06/2008 16:56

Microbac®

Microbac Laboratories Inc.

CONTINUING CALIBRATION BLANK (CCB)

00077663

Login Number: L08100867 Run Date: 11/04/2008 Sample ID: WG287191-12

Instrument ID: HYDRA Run Time: 13:23 Method: 7470A

File ID: HY.110408.132311 Analyst: ADC Units: ug/L

Workgroup (AAB#): WG286889 Cal ID: HYDRA - 04-NOV-08

Matrix: WATER

Analytes	MDL	RDL	Concentration	Qualifier
Mercury	0.100	0.200	0.100	U

U = Result is less than MDL.
F = Result is between MDL and RL.
* = Result is above RL.

CCB - Modified 03/05/2008
PDF File ID: 1243191
Report generated 11/06/2008 16:56

Microbac Laboratories Inc.

CONTINUING CALIBRATION BLANK (CCB)

00077664

Login Number: L08100867 Run Date: 11/04/2008 Sample ID: WG287191-14

Instrument ID: HYDRA Run Time: 13:42 Method: 7470A

File ID: HY.110408.134233 Analyst: ADC Units: ug/L

Workgroup (AAB#): WG286889 Cal ID: HYDRA - 04-NOV-08

Matrix: WATER

Analytes	MDL	RDL	Concentration	Qualifier
Mercury	0.100	0.200	0.100	U

U = Result is less than MDL.
F = Result is between MDL and RL.
* = Result is above RL.

CCB - Modified 03/05/2008
PDF File ID: 1243191
Report generated 11/06/2008 16:56

Microbac Laboratories Inc.

INITIAL CALIBRATION VERIFICATION (ICV)
(Alternate Source)

00077665

Login Number: L08100867 Run Date: 11/04/2008 Sample ID: WG287191-07
Instrument ID: HYDRA Run Time: 12:54 Method: 7470A
File ID: HY.110408.125449 Analyst: ADC Units: ug/L
Workgroup (AAB#): WG286889 Cal ID: HYDRA - 04-NOV-08
QC Key: STD

Analyte		Expected	Found	%REC	LIMITS	Q
Mercury		2	2.08	104	90 - 110	

* Exceeds LIMITS Limit

ICV - Modified 03/06/2008
PDF File ID: 1243188
Report generated 11/06/2008 16:56

Microbac®

Microbac Laboratories Inc.

CONTINUING CALIBRATION VERIFICATION (CCV)

00077666

Login Number: L08100867 Run Date: 11/04/2008 Sample ID: WG287191-09

Instrument ID: HYDRA Run Time: 12:58 Method: 7470A

File ID: HY.110408.125827 Analyst: ADC QC Key: STD

Workgroup (AAB#): WG286889 Cal ID: HYDRA - 04-NOV-08

Matrix: WATER

Analyte		Expected	Found	UNITS	%REC	LIMITS		Q
Mercury, Total		0.00200	0.00203	mg/L	102	80 - 120		

* Exceeds LIMITS Criteria

CCV - Modified 03/05/2008

PDF File ID: 1243190

Report generated 11/06/2008 16:56

Microbac®

Microbac Laboratories Inc.

CONTINUING CALIBRATION VERIFICATION (CCV)

00077667

Login Number: L08100867 Run Date: 11/04/2008 Sample ID: WG287191-11

Instrument ID: HYDRA Run Time: 13:21 Method: 7470A

File ID: HY.110408.132129 Analyst: ADC QC Key: STD

Workgroup (AAB#): WG286889 Cal ID: HYDRA - 04-NOV-08

Matrix: WATER

Analyte		Expected	Found	UNITS	%REC	LIMITS		Q
Mercury, Total		0.00200	0.00205	mg/L	103	80 - 120		

* Exceeds LIMITS Criteria

CCV - Modified 03/05/2008

PDF File ID: 1243190

Report generated 11/06/2008 16:56

Microbac®

Microbac Laboratories Inc.
CONTINUING CALIBRATION VERIFICATION (CCV)

00077668

Login Number: L08100867
Run Date: 11/04/2008
Sample ID: WG287191-13
Instrument ID: HYDRA
Run Time: 13:40
Method: 7470A
File ID: HY.110408.134039
Analyst: ADC
QC Key: STD
Workgroup (AAB#): WG286889
Cal ID: HYDRA - 04-NOV-08
Matrix: WATER

Analyte		Expected	Found	UNITS	%REC	LIMITS		Q
Mercury, Total		0.00200	0.00200	mg/L	100	80 - 120		

* Exceeds LIMITS Criteria

CCV - Modified 03/05/2008
PDF File ID: 1243190
Report generated 11/06/2008 16:56

Microbac®

3.0 Attachments

Microbac Laboratories Inc.
Analyst Listing
November 24, 2008

ADC – ANTHONY D. CANTER
AJF – AMANDA J. FICKIESEN
ALB – ANNIE L. BROWN
AM – ALISON J. MILLER
AML – ANTHONY M. LONG
BRG – BRENDA R. GREGORY
CAA – CASSIE A. AUGENSTEIN
CAF – CHERYL A. FLOWERS
CAH – CHARLES A. HALL
CEB – CHAD E. BARNES
CLC – CHRYS L. CRAWFORD
CLW – CHARISSA L. WINTERS
CMS – CRYSTAL M. STEPHENS
CPD – CHAD P. DAVIS
CSH – CHRIS S. HILL
CTB – CHRIS T. BUCINA
DDE – DEBRA D. ELLIOTT
DEL – DON E. LIGHTFRITZ
DEV – DAVID E. VANDENBERG
DGB – DOUGLAS G. BUTCHER
DIH – DEANNA I. HESSON
DLB – DAVID L. BUMGARNER
DLP – DOROTHY L. PAYNE
DLR – DIANNA L. RAUCH
DR – DEANNA ROBERTS
DSF – DEBRA S. FREDERICK
EAB – EDDIE A. BYERS
ECL – ERIC C. LAWSON
ED – EMILY E. DECKER
EDA – ERIN D. AGEE
EDH – ETHAN D. MORRIS
ERP – ERIN R. PORTER
FJB – FRANCES J. BOLDEN
HAV – HEMA VILASAGAR
HJR – HOLLY J. REED
JBK – JEREMY B. KINNEY
JC – JOHN L. CONLEY
JDH – JUSTIN D. HESSON
JKP – JACQUELINE K. PARSONS
JKT – JANE K. THOMPSON
JWR – JOHN W. RICHARDS
JWS – JACK W. SHEAVES
JYH – JI Y. HU
KEB – KATHRYN E. BARNES
KHR – KIM H. RHODES
KJW – KATIE J. WIEFERICH
KRA – KATHY R. ALBERTSON
LHT – LANCE H. THOMPSON
LKN – LINDA K. NEDEFF
LSB – LESLIE S. BUCINA
MDA – MIKE D. ALBERTSON
MDC – MICHAEL D. COCHRAN
MES – MARY E. SCHILLING
MMB – MAREN M. BEERY
MRT – MICHELLE R. TAYLOR
MSW – MATT S. WILSON
NPM – NATHANIEL P. MILLER
PDM – PIERCE D. MORRIS
RAH – ROY A. HALSTEAD
RB – ROBERT BUCHANAN
REK – ROBERT E. KYER
RLK – ROBIN L. KLINGER
RWC – RODNEY W. CAMPBELL
SAV – SARAH A. VANDENBERG
SDH – SHANA D. HINYARD
SDL – SHELLY D. LENT
SLM – STEPHANIE L. MOSSBURG
SLP – SHERI L. PFALZGRAF
SMH – SHAUNA M. HYDE
TDH – TRICIA D. HUCK
TIP – TAE I. PARRISH
TMB – TIFFANY M. BAILEY
TMM – TAMMY M. MORRIS
VC – VICKI COLLIER
WTD – WADE T. DELONG

Microbac Laboratories Inc.
List of Valid Qualifiers
November 24, 2008

00077671

Qualkey: STD

Qualifier	Description
*	Surrogate or spike compound out of range
+	Correlation coefficient for the MSA is less than 0.995
<	Result is less than the associated numerical value.
>	Result is greater than the associated numerical value.
A	See the report narrative
B	Analyte present in method blank
B3	Target analyte detected in calibration blank at or above the method reporting limit
C	Confirmed by GC/MS
CG	Confluent growth
D1	Sample required dilution due to matrix.
D2	Sample required dilution due to high concenration of target analyte.
DL	Surrogate or spike compound was diluted out
E	Estimated concentration due to sample matrix interference
E1	Concentration estimated. Analyte exceeded calibration range. Insufficient sample for reanalysis.
E2	Concentration estimated. Analyte exceeded calibration range. Reanalysis not performed due to matrix.
E3	Concentration estimated. Analyte exceeded calibration range. Reanalysis not performed due to holding time requirements
EDL	Elevated sample reporting limits, presence of non-target analytes
EMPC	Estimated Maximum Possible Concentration
F, S	Estimated result below quantitation limit; method of standard additions(MSA)
FL	Free Liquid
H1	Sample analysis performed past holding time.
I	Semiquantitative result (out of instrument calibration range)
J	The analyte was positively identified, but the quantitation was below the RL
J,B	Analyte detected in both the method blank and sample above the MDL.
J,P	Estimate; columns don't agree to within 40%
J,S	Estimated concentration; analyzed by method of standard addition (MSA)
L	Sample reporting limits elevated due to matrix interference
L1	The associated blank spike (LCS) recovery was above the laboratory acceptance limits.
L2	The associated blank spike (LCS) recovery was below the laboratory acceptance limits.
M	Matrix effect; the concentration is an estimate due to matrix effect.
M1	Matrix spike recovery was high; the assocated blank spike recovery was acceptable.
M2	Matrix spike recovery was low; the assocated blank spike recovery was acceptable.
M3	The spike recovery value is unusable since the analyte concentration is disproportionate to the spike level.
N	Tentatively identified compound(TIC)
NA	Not applicable
ND	Not detected at or above the reporting limit
ND, L	Not detected; sample reporting limit (RL) elevated due to interference
ND, S	Not detected; analyzed by method of standard addition (MSA)
NF	Not found by library search
NFL	No free liquid
NI	Non-ignitable
NR	Analyte is not required to be analyzed
NS	Not spiked
P	Concentrations >40% difference between the two GC columns
Q	One or more quality control criteria fail. See narrative.
Q1	Sample integraity was not maintained. See report narrative.
QNS	Quantity of sample not sufficient to perform analysis
R1	Duplicate RPD/RSD exceeded the method acceptance limit.
R2	Duplicate RPD/RSD exceeded the laboratory acceptance limit.
RA	Reanalysis confirms reported results
RE	Reanalysis confirms sample matrix interference
S	Analyzed by method of standard addition (MSA)
SMI	Sample matrix interference on surrogate
SP	Reported results are for spike compounds only
TIC	Library Search Compound
TNTC	Too numerous to count
U	Undetected; the concentration is below the reported MDL.
UJ	Undetected; the MDL and RL are estimated due to quality control discrepancies.
V1	CCV recovery was above method acceptance limits. This target analyte was not detected in the sample.
V2	CCV recovery was above method acceptance limits. Insufficient volume for sample reanalysis.
W	Post-digestion spike for furnace AA out of control limits
X	Exceeds regulatory limit
X, S	Exceeds regulatory limit; method of standard additions (MSA)
Z	Cannot be resolved from isomer - see below

*****Special Notes for Organic Analytes**

Microbac®

Microbac Laboratories Inc.
List of Valid Qualifiers
November 24, 2008

Qualkey: STD

1. Acrolein and acrylonitrile by method 624 are semi-quantitative screens only.
2. 1,2-Diphenylhydrazine is unstable and is reported as azobenzene.
3. N-nitrosodiphenylamine cannot be separated from diphenylamine.
4. 3-Methylphenol and 4-Methylphenol are unresolvable compounds.
5. m-Xylene and p-Xylene are unresolvable compounds.
6. The reporting limits for Appendix II/IX compounds by method 8270 are based on EPA estimated PQLs referenced in 40 CFR Part 264, Appendix IX. They are not always achievable for every compound an are matrix dependent.

Microbac®

00077673

NO. 5402

Chain of Custody

Shaw® Shaw Environmental & Infrastructure, Inc.
3010 Briarpark Drive, Suite 400
Houston, TX 77042
(713) 996-4400

Laboratory Name: MicroBAC
Address: 158 Starlite Drive Marrietta, Ohio
Contact: Stephanie Massburg

Project Name: Longhorn
Project Location: Karnack, Tx

Project No.: 117591.00098800
Project Contact: Jennifer Hoang
Project Telephone No.: (713) 996-4408

Point of Contact: Allen Willmore
Telephone No.: (713) 247-9292
Project Manager/Supervisor: Praveen Srivastav

Analysis and Method Desired (Indicate separate containers)

Item No.	Sample Number	Date	Time	Comp	Grab	Matrix	Sample Description, Location	Number of Containers	VOCs	TAL METALS						Remarks
1	LHSMW25-102808	10/28/08	12:50		✓	W	LHAAP-46	3	✓							
2	LHSMW25-102808-MS	10/28/08	12:50		✓	W	LHAAP-46	2	✓							MS
3	LHSMW25-102808-MSD	10/28/08	12:50		✓	W	LHAAP-46	2	✓							MSD
4	LHSMW25-102808-QA	10/28/08	12:50		✓	W	LHAAP-46	2	✓							FIELD DUP.
5	LHSMW23-102808	10/28/08	11:40		✓	W	LHAAP-46	4	✓	✓						
6	46WW02-102808	10/28/08	13:55		✓	W	LHAAP-46	3	✓							
7	LHSMW11-102708	10/27/08	12:15		✓	W	LHAAP-46	1		✓						LHSMW11-102708
8	LHSMW20-102708	10/27/08	15:20		✓	W	LHAAP-46	3	✓							
9	LHSMW15-102708	10/27/08	13:50		✓	W	LHAAP-46	4	✓	✓						
10	46WW04-102708	10/27/08	14:35		✓	W	LHAAP-46	1		✓						

Transfers Relinquished By (signature)	Date/Time	Transfers Accepted By (signature)	Date/Time	Special Instructions
[signature]	10/29/08 17:50			STANDARD TAT
				FedEx Airbill No.:
		Laboratory Elvis Portal	10-30-08 0930	Sampler's Signature [signature]

TAT: ____ Standard ____ Rush Date ____ Seals Intact? ____ Y ____ N Received Good Condition ____ Y ____ N ____ Cold

White - Lab Copy Canary - Field Copy Pink - File Copy

Form Number: 433_2
Rev. 10-19-07

00077674

NO. 5403

Chain of Custody

Shaw® Shaw Environmental & Infrastructure, Inc.
3010 Briarpark Drive, Suite 400
Houston, TX 77042
(713) 996-4400

Laboratory Name: MICROBAC LABS
Address: 158 Starlite Dr. Marrietta, Ohio
Contact: Stephanie Mossburg

Project Name: Longhorn
Project Location: Karnack, Tx
Project No.: 117591.0006A100
Project Contact: Jennifer Hoang
Project Telephone No.: (713) 996-4408
Point of Contact: Allen Willmore
Telephone No.: (713) 247-9292
Project Manager/Supervisor: Praveen Srivastav

Analysis and Method Desired (Indicate separate containers)

Item No.	Sample Number	Date	Time	Comp	Grab	Matrix	Sample Description, Location	Number of Containers	VOCs	Remarks
1	29WW16-102808	10/28/08	14:35		✓	W	LHAAP-29	3	✓	
2	29WW35-102708	10/27/08	10:30		✓	W	LHAAP-29	3	✓	29WW35-102708
3	29WW24-102708	10/27/08	09:40		✓	W	LHAAP-29	3	✓	29WW24-102708
4										
5										
6										
7										
8										
9										
10										

Transfers Relinquished By (signature)	Date/Time	Transfers Accepted By (signature)	Date/Time
M. Willmore	10/29/08 17:30		
		Laboratory: Cindy Potter	10-30-08 0930

Special Instructions: STANDARD TAT

FedEx Airbill No.:

Sampler's Signature: M. Willmore

TAT: ____ Standard ____ Rush Date ____ Seals Intact? ____ Y ____ N Received Good Condition ____ Y ____ N ____ Cold

Form Number: 433_2
Rev. 10-19-07

White - Lab Copy Canary - Field Copy Pink - File Copy

Microbac Laboratories, Inc.

SAMPLE RECEIPT FORM

00077675

158 Starlite Drive
Marietta, OH 45750
(740) 373-4071

Client: SHAW longhorn	
Workorder Number: B	
Date Received: 10-30-08	
Delivered by: ( ) Fedx (✓) UPS ( ) Client ( ) Courier	**Time:** 0930
Opened by: ERP	
IR Temp Gun: ( ) D (✓) G	
Logged by: RCK	L 08100867

Cooler information

Cooler ID	Temp C	Airbill#	COC#	Other
76	D	1Z66V7250199632757		

Inspection Checklist	**Y**	**N**	**NA**	**Discrepancy ID**
Were shipping coolers sealed?	✓			
Were custody seals intact?				
Were cooler temperatures in range of 0 - 6?	✓			
Was ice present?	✓			
Were COC's received/ information complete/signed and dated?	✓			
Were sample containers and labels intact and match COC?		✓		1
Were the correct containers and volumes received?	✓			
Were correct preservatives used? (water only)	✓			
Were pH ranges acceptable? (voa's excluded)	✓			
Were VOA samples free of headspace (< 6mm)?	✓			
Were samples received within EPA hold times?	✓			

Discrepancy/Comments/Other Problems

1 Did not Receive 29WW35-102708 and 29WW24-102708 VOA Samples

Distribution

Name of Microbac representative:
Client/Company:
Person Contacted:
Date contacted:

Resolution/other comments:

Microbac Laboratories Inc.

00077676

Internal Chain of Custody Report

Login: L08100867
Account: 2773
Project: 2773.025
Samples: 11
Due Date: 10-NOV-2008

Samplenum	Container ID	Products
L08100867-06	518243	826-LOW

Bottle: 1

Seq.	Purpose	From	To	Date/Time	Accept	Relinquish
1	LOGIN	COOLER	V1	30-OCT-2008 15:56	RLK	
2	ANALYZ	V1	ORG4	30-OCT-2008 17:03	AM	RLK
3	STORE	ORG4	A1	14-NOV-2008 08:55	JKT	MRT

Bottle: 2

Seq.	Purpose	From	To	Date/Time	Accept	Relinquish
1	LOGIN	COOLER	V1	30-OCT-2008 15:56	RLK	
2	ANALYZ	V1	ORG4	30-OCT-2008 17:03	AM	RLK
3	STORE	ORG4	A1	14-NOV-2008 08:55	JKT	MRT

Bottle: 3

Seq.	Purpose	From	To	Date/Time	Accept	Relinquish
1	LOGIN	COOLER	V1	30-OCT-2008 15:56	RLK	
2	ANALYZ	V1	ORG4	30-OCT-2008 17:03	AM	RLK
3	STORE	ORG4	A1	14-NOV-2008 08:55	JKT	MRT

Samplenum	Container ID	Products
L08100867-11	518249	826-LOW

Bottle: 1

Seq.	Purpose	From	To	Date/Time	Accept	Relinquish
1	LOGIN	COOLER	V1	30-OCT-2008 15:56	RLK	
2	ANALYZ	V1	ORG4	30-OCT-2008 17:03	AM	RLK
3	STORE	ORG4	A1	14-NOV-2008 08:56	JKT	MRT

Bottle: 2

Seq.	Purpose	From	To	Date/Time	Accept	Relinquish
1	LOGIN	COOLER	V1	30-OCT-2008 15:56	RLK	
2	ANALYZ	V1	ORG4	30-OCT-2008 17:03	AM	RLK
3	STORE	ORG4	A1	14-NOV-2008 08:56	JKT	MRT

Bottle: 3

Seq.	Purpose	From	To	Date/Time	Accept	Relinquish
1	LOGIN	COOLER	V1	30-OCT-2008 15:56	RLK	
2	ANALYZ	V1	ORG4	30-OCT-2008 17:03	AM	RLK
3	STORE	ORG4	A1	14-NOV-2008 08:56	JKT	MRT

A1 - Sample Archive (COLD)
A2 - Sample Archive (AMBIENT)
F1 - Volatiles Freezer in Login
V1 - Volatiles Refrigerator in Login
W1 - Walkin Cooler in Login

Microbac Laboratories Inc.

00077677

Internal Chain of Custody Report

Login: L08100867
Account: 2773
Project: 2773.025
Samples: 11
Due Date: 10-NOV-2008

Samplenum	Container ID	Products
L08100867-03	518239	826-LOW

Bottle: 1

Seq.	Purpose	From	To	Date/Time	Accept	Relinquish
1	LOGIN	COOLER	V1	30-OCT-2008 15:56	RLK	
2	ANALYZ	V1	ORG4	30-OCT-2008 17:03	AM	RLK
3	STORE	ORG4	A1	14-NOV-2008 08:55	JKT	MRT

Bottle: 2

Seq.	Purpose	From	To	Date/Time	Accept	Relinquish
1	LOGIN	COOLER	V1	30-OCT-2008 15:56	RLK	
2	ANALYZ	V1	ORG4	30-OCT-2008 17:03	AM	RLK
3	STORE	ORG4	A1	14-NOV-2008 08:55	JKT	MRT

Samplenum	Container ID	Products
L08100867-05	518241	826-LOW

Bottle: 1

Seq.	Purpose	From	To	Date/Time	Accept	Relinquish
1	LOGIN	COOLER	V1	30-OCT-2008 15:56	RLK	
2	ANALYZ	V1	ORG4	30-OCT-2008 17:03	AM	RLK
3	STORE	ORG4	A1	14-NOV-2008 08:55	JKT	MRT

Bottle: 2

Seq.	Purpose	From	To	Date/Time	Accept	Relinquish
1	LOGIN	COOLER	V1	30-OCT-2008 15:56	RLK	
2	ANALYZ	V1	ORG4	30-OCT-2008 17:03	AM	RLK
3	STORE	ORG4	A1	14-NOV-2008 08:55	JKT	MRT

Bottle: 3

Seq.	Purpose	From	To	Date/Time	Accept	Relinquish
1	LOGIN	COOLER	V1	30-OCT-2008 15:56	RLK	
2	ANALYZ	V1	ORG4	30-OCT-2008 17:03	AM	RLK
3	STORE	ORG4	A1	14-NOV-2008 08:55	JKT	MRT

A1 - Sample Archive (COLD)
A2 - Sample Archive (AMBIENT)
F1 - Volatiles Freezer in Login
V1 - Volatiles Refrigerator in Login
W1 - Walkin Cooler in Login

Microbac Laboratories Inc.

00077678

Internal Chain of Custody Report

Login: L08100867
Account: 2773
Project: 2773.025
Samples: 11
Due Date: 10-NOV-2008

Samplenum	Container ID	Products
L08100867-04	518240	826-LOW

Bottle: 1

Seq.	Purpose	From	To	Date/Time	Accept	Relinquish
1	LOGIN	COOLER	V1	30-OCT-2008 15:56	RLK	
2	ANALYZ	V1	ORG4	30-OCT-2008 17:03	AM	RLK
3	STORE	ORG4	A1	14-NOV-2008 08:55	JKT	MRT

Bottle: 2

Seq.	Purpose	From	To	Date/Time	Accept	Relinquish
1	LOGIN	COOLER	V1	30-OCT-2008 15:56	RLK	
2	ANALYZ	V1	ORG4	30-OCT-2008 17:03	AM	RLK
3	STORE	ORG4	A1	14-NOV-2008 08:55	JKT	MRT

Samplenum	Container ID	Products
L08100867-07	518244	AG-MS AL AS-MS BA-MS BE-AX CA CD-MS CO-AX CR-M

Bottle: 1

Seq.	Purpose	From	To	Date/Time	Accept	Relinquish
1	LOGIN	COOLER	W1	30-OCT-2008 15:56	RLK	
2	PREP	W1	DIG	31-OCT-2008 05:27	REK	RLK
3	EXTRACT	DIG	METALS	31-OCT-2008 06:44		VC
4	STORE	DIG	A1	03-NOV-2008 05:52	JKT	REK

Samplenum	Container ID	Products
L08100867-01	518237	826-LOW

Bottle: 1

Seq.	Purpose	From	To	Date/Time	Accept	Relinquish
1	LOGIN	COOLER	V1	30-OCT-2008 15:56	RLK	
2	ANALYZ	V1	ORG4	30-OCT-2008 17:03	AM	RLK
3	STORE	ORG4	A1	14-NOV-2008 08:55	JKT	MRT

Bottle: 2

Seq.	Purpose	From	To	Date/Time	Accept	Relinquish
1	LOGIN	COOLER	V1	30-OCT-2008 15:56	RLK	
2	ANALYZ	V1	ORG4	30-OCT-2008 17:03	AM	RLK
3	STORE	ORG4	A1	14-NOV-2008 08:55	JKT	MRT

Bottle: 3

Seq.	Purpose	From	To	Date/Time	Accept	Relinquish
1	LOGIN	COOLER	V1	30-OCT-2008 15:56	RLK	
2	ANALYZ	V1	ORG4	30-OCT-2008 17:03	AM	RLK
3	STORE	ORG4	A1	14-NOV-2008 08:55	JKT	MRT

A1 - Sample Archive (COLD)
A2 - Sample Archive (AMBIENT)
F1 - Volatiles Freezer in Login
V1 - Volatiles Refrigerator in Login
W1 - Walkin Cooler in Login

Microbac®

Microbac Laboratories Inc.

00077679

Internal Chain of Custody Report

Login: L08100867
Account: 2773
Project: 2773.025
Samples: 11
Due Date: 10-NOV-2008

Samplenum	Container ID	Products
L08100867-02	518238	826-LOW

Bottle: 1

Seq.	Purpose	From	To	Date/Time	Accept	Relinquish
1	LOGIN	COOLER	V1	30-OCT-2008 15:56	RLK	
2	ANALYZ	V1	ORG4	30-OCT-2008 17:03	AM	RLK
3	STORE	ORG4	A1	14-NOV-2008 08:55	JKT	MRT

Bottle: 2

Seq.	Purpose	From	To	Date/Time	Accept	Relinquish
1	LOGIN	COOLER	V1	30-OCT-2008 15:56	RLK	
2	ANALYZ	V1	ORG4	30-OCT-2008 17:03	AM	RLK
3	STORE	ORG4	A1	14-NOV-2008 08:55	JKT	MRT

Samplenum	Container ID	Products
L08100867-09	518246	826-LOW

Bottle: 1

Seq.	Purpose	From	To	Date/Time	Accept	Relinquish
1	LOGIN	COOLER	V1	30-OCT-2008 15:56	RLK	
2	ANALYZ	V1	ORG4	30-OCT-2008 17:03	AM	RLK
3	STORE	ORG4	A1	14-NOV-2008 08:56	JKT	MRT

Bottle: 2

Seq.	Purpose	From	To	Date/Time	Accept	Relinquish
1	LOGIN	COOLER	V1	30-OCT-2008 15:56	RLK	
2	ANALYZ	V1	ORG4	30-OCT-2008 17:03	AM	RLK
3	STORE	ORG4	A1	14-NOV-2008 08:56	JKT	MRT

Bottle: 3

Seq.	Purpose	From	To	Date/Time	Accept	Relinquish
1	LOGIN	COOLER	V1	30-OCT-2008 15:56	RLK	
2	ANALYZ	V1	ORG4	30-OCT-2008 17:03	AM	RLK
3	STORE	ORG4	A1	14-NOV-2008 08:56	JKT	MRT

Samplenum	Container ID	Products
L08100867-09	518247	AG-MS AL AS-MS BA-MS BE-AX CA CD-MS CO-AX CR-M

Bottle: 1

Seq.	Purpose	From	To	Date/Time	Accept	Relinquish
1	LOGIN	COOLER	W1	30-OCT-2008 15:56	RLK	
2	PREP	W1	DIG	31-OCT-2008 05:27	REK	RLK
3	EXTRACT	DIG	METALS	31-OCT-2008 06:44		VC
4	STORE	DIG	A1	03-NOV-2008 05:52	JKT	REK

A1 - Sample Archive (COLD)
A2 - Sample Archive (AMBIENT)
F1 - Volatiles Freezer in Login
V1 - Volatiles Refrigerator in Login
W1 - Walkin Cooler in Login

Microbac®

Microbac Laboratories Inc.

Internal Chain of Custody Report

Login: L08100867
Account: 2773
Project: 2773.025
Samples: 11
Due Date: 10-NOV-2008

Samplenum	Container ID	Products
L08100867-05	518242	AG-MS AL AS-MS BA-MS BE-AX CA CD-MS CO-AX CR-M

Bottle: 1

Seq.	Purpose	From	To	Date/Time	Accept	Relinquish
1	LOGIN	COOLER	W1	30-OCT-2008 15:56	RLK	
2	PREP	W1	DIG	31-OCT-2008 05:27	REK	RLK
3	EXTRACT	DIG	METALS	31-OCT-2008 06:44		VC
4	STORE	DIG	A1	03-NOV-2008 05:52	JKT	REK

Samplenum	Container ID	Products
L08100867-10	518248	AG-MS AL AS-MS BA-MS BE-AX CA CD-MS CO-AX CR-M

Bottle: 1

Seq.	Purpose	From	To	Date/Time	Accept	Relinquish
1	LOGIN	COOLER	W1	30-OCT-2008 15:56	RLK	
2	PREP	W1	DIG	31-OCT-2008 05:27	REK	RLK
3	EXTRACT	DIG	METALS	31-OCT-2008 06:44		VC
4	STORE	DIG	A1	03-NOV-2008 05:52	JKT	REK

Samplenum	Container ID	Products
L08100867-08	518245	826-LOW

Bottle: 1

Seq.	Purpose	From	To	Date/Time	Accept	Relinquish
1	LOGIN	COOLER	V1	30-OCT-2008 15:56	RLK	
2	ANALYZ	V1	ORG4	30-OCT-2008 17:03	AM	RLK
3	STORE	ORG4	A1	14-NOV-2008 08:55	JKT	MRT

Bottle: 2

Seq.	Purpose	From	To	Date/Time	Accept	Relinquish
1	LOGIN	COOLER	V1	30-OCT-2008 15:56	RLK	
2	ANALYZ	V1	ORG4	30-OCT-2008 17:03	AM	RLK
3	STORE	ORG4	A1	14-NOV-2008 08:55	JKT	MRT

Bottle: 3

Seq.	Purpose	From	To	Date/Time	Accept	Relinquish
1	LOGIN	COOLER	V1	30-OCT-2008 15:56	RLK	
2	ANALYZ	V1	ORG4	30-OCT-2008 17:03	AM	RLK
3	STORE	ORG4	A1	14-NOV-2008 08:56	JKT	MRT

A1 - Sample Archive (COLD)
A2 - Sample Archive (AMBIENT)
F1 - Volatiles Freezer in Login
V1 - Volatiles Refrigerator in Login
W1 - Walkin Cooler in Login

Gulf Coast ACCUTEST Laboratories

IT'S ALL IN THE CHEMISTRY

04/10/07

Technical Report for

Shaw E & I, Inc.

Longhorn Army Ammunition Plant

PO# 261809 OP

Accutest Job Number: T16395

Sampling Date: 02/19/07

Report to:

Shaw E & I, Inc.

diane.meyer@shawgrp.com

ATTN: Diane Meyer

Total number of pages in report: 64

ACCREDITED IN ACCORDANCE WITH nelac

Test results contained within this data package meet the requirements of the National Environmental Laboratory Accreditation Conference and/or state specific certification programs as applicable.

Ron Martino
Laboratory Manager

ACCUTEST LABORATORIES 50 YEARS 1956-2006

This report shall not be reproduced, except in its entirety, without the written approval of Accutest Laboratories.

Table of Contents

-1-

Section 1: Sample Summary 3
Section 2: Case Narrative/Conformance Summary 4
Section 3: Sample Results 7
3.1: T16395-1: LHSMW-23-FEB2007 8
3.2: T16395-2: 46WW04-FEB2007 12
3.3: T16395-3: 46WW01-FEB2007 16
3.4: T16395-4: TRIP BLANK 021907 20
Section 4: Misc. Forms 22
4.1: Chain of Custody 23
Section 5: GC/MS Volatiles - QC Data Summaries 27
5.1: Method Blank Summary 28
5.2: Blank Spike Summary 30
5.3: Matrix Spike/Matrix Spike Duplicate Summary 32
5.4: Instrument Performance Checks (BFB) 34
5.5: Internal Standard Area Summaries 35
5.6: Surrogate Recovery Summaries 36
5.7: Initial and Continuing Calibration Summaries 37
Section 6: General Chemistry - QC Data Summaries 40
6.1: Method Blank and Spike Results Summary 41
6.2: Duplicate Results Summary 42
6.3: Matrix Spike Results Summary 43
6.4: Matrix Spike Duplicate Results Summary 44
Section 7: Misc. Forms (Accutest Laboratories Southeast, Inc.) 45
7.1: Chain of Custody 46
Section 8: GC Volatiles - QC Data (Accutest Laboratories Southeast, Inc.) 48
8.1: Method Blank Summary 49
8.2: Blank Spike Summary 50
8.3: Matrix Spike Summary 51
8.4: Duplicate Summary 52
8.5: Initial and Continuing Calibration Summaries 53
Section 9: General Chemistry - QC Data (Accutest Laboratories Southeast, Inc.) 58
9.1: Method Blank and Spike Results Summary 59
9.2: Duplicate Results Summary 60
9.3: Matrix Spike Results Summary 61
9.4: Inst QC GN24390: Perchlorate 62

Accutest Laboratories

Sample Summary

Shaw E & I, Inc.

Job No: T16395

Longhorn Army Ammunition Plant
Project No: PO# 261809 OP

Sample Number	Collected Date	Time By	Received	Matrix Code	Type	Client Sample ID
T16395-1	02/19/07	13:50	02/21/07	AQ	Ground Water	LHSMW-23-FEB2007
T16395-2	02/19/07	14:05	02/21/07	AQ	Ground Water	46WW04-FEB2007
T16395-3	02/19/07	14:56	02/21/07	AQ	Ground Water	46WW01-FEB2007
T16395-4	02/19/07	00:00	02/21/07	AQ	Trip Blank Water	TRIP BLANK 021907

ACCUTEST Laboratories

SAMPLE DELIVERY GROUP CASE NARRATIVE

Client: Shaw E & I, Inc. **Job No** T16395

Site: Longhorn Army Ammunition Plant **Report Date** 3/8/2007 4:20:17 PM

3 Samples and 1 Trip Blank were collected on 02/19/2007 and were received at Accutest on 02/21/2007 properly preserved, at 3 Deg. C and intact. These Samples received an Accutest job number of T16395. A listing of the Laboratory Sample ID, Client Sample ID and dates of collection are presented in the Results Summary Section of this report.

Except as noted below, all method specified calibrations and quality control performance criteria were met for this job. For more information, please refer to QC summary pages.

Volatiles by GCMS By Method SW846 8260B

Matrix AQ	Batch ID: VF2305

- All samples were analyzed within the recommended method holding time.
- All method blanks for this batch meet method specific criteria.
- Sample(s) T16395-2MS, T16395-2MSD were used as the QC samples indicated.

Volatiles by GC By Method RSKSOP-147/175

Matrix AQ	Batch ID: F:GXY991

- Dissolved Gasses analysis performed at Accutest Laboratories, Orlando, FL.

Wet Chemistry By Method EPA 120.1

Matrix AQ	Batch ID: F:R17941

- Specific Conductivity: Analysis performed at Accutest Laboratories, Orlando, FL.

Matrix AQ	Batch ID: GN11341

- All samples were analyzed within the recommended method holding time.
- All method blanks for this batch meet method specific criteria.
- Sample(s) T16411-10DUP were used as the QC samples for Specific Conductivity.

Wet Chemistry By Method EPA 150.1/9040

Matrix AQ	Batch ID: GN11276

- Sample(s) T16395-3DUP were used as the QC samples for pH.

Wet Chemistry By Method EPA 310.1

Matrix AQ	Batch ID: GN11336

- All samples were analyzed within the recommended method holding time.
- All method blanks for this batch meet method specific criteria.
- Sample(s) T16411-10DUP, T16411-10MS were used as the QC samples for Alkalinity, Total as CaCO3.

Wet Chemistry By Method EPA 314

Matrix AQ	Batch ID: F:GP9043

- Perchlorate Analysis performed at Accutest Laboratories, Orlando, FL.

Wet Chemistry By Method EPA 325.3

Matrix AQ	Batch ID: GN11305

- All samples were analyzed within the recommended method holding time.
- All method blanks for this batch meet method specific criteria.
- Sample(s) T16041-1DUP, T16041-1MS were used as the QC samples for Chloride.

Wet Chemistry By Method EPA 353.2

Matrix AQ	Batch ID: GN11275

- All samples were analyzed within the recommended method holding time.
- All method blanks for this batch meet method specific criteria.
- Sample(s) T16395-1DUP, T16395-1MS were used as the QC samples for Nitrogen, Nitrite.

Matrix AQ	Batch ID: GN11301

- All method blanks for this batch meet method specific criteria.
- Sample(s) T16445-18DUP, T16445-18MS were used as the QC samples for Nitrogen, Nitrate + Nitrite.

Wet Chemistry By Method EPA 375.3

Matrix AQ	Batch ID: GN11356

- All samples were analyzed within the recommended method holding time.
- All method blanks for this batch meet method specific criteria.
- Sample(s) T16411-10DUP, T16411-10MS were used as the QC samples for Sulfate.

Wet Chemistry By Method EPA 376.1

Matrix AQ	Batch ID: GN11286

- All samples were analyzed within the recommended method holding time.
- All method blanks for this batch meet method specific criteria.
- Sample(s) T16411-10DUP were used as the QC samples for Sulfide.

Wet Chemistry By Method EPA 415.1/9060

Matrix AQ	Batch ID: GN11296

- All samples were analyzed within the recommended method holding time.
- All method blanks for this batch meet method specific criteria.
- Sample(s) T16411-10DUP, T16411-10MS were used as the QC samples for Total Organic Carbon.

Wet Chemistry By Method SM18 4500NO3E/NO2B

Matrix AQ	Batch ID: R15466

- Nitrogen, Nitrate: Calculated as: (Nitrogen, Nitrate + Nitrite) - (Nitrogen, Nitrite)

Accutest Laboratories Gulf Coast (ALGC) certifies that this report meets the project requirements for analytical data produced for the samples as received at ALGC and as stated on the COC. ALGC certifies that the data meets the Data QualityObjectives for precision, accuracy and completeness as specified in the ALGC Quality Manual except as noted above. This report is to be used in its entirety. ALGC is not responsible for any assumptions of data quality if partial data packages are used

SAMPLE DELIVERY GROUP CASE NARRATIVE

Client: Accutest Laboratories Gulf Coast, Inc. **Job No:** T16395

Site: ITTXHO: Longhorn Army Ammunition Plant **Report Date:** 3/8/2007 9:00:14 AM

3 Samples were collected on 02/19/2007 and were received at Accutest on 02/21/2007 properly preserved, at 1.6 Deg. C and intact. These Samples received an Accutest job number of T16395. A listing of the Laboratory Sample ID, Client Sample ID and dates of collection are presented in the Results Summary Section of this report.

Except as noted below, all method specified calibrations and quality control performance criteria were met for this job. For more information, please refer to QC summary pages.

Volatiles by GC by Method RSKSOP-147/175

Matrix: AQ **Batch ID:** GXY991

All samples were analyzed within the recommended method holding time.

All method blanks for this batch meet method specific criteria.

Samples T16411-10DUP, T16411-10MS were used as the QC samples indicated.

Wet Chemistry by Method EPA 314

Matrix: AQ **Batch ID:** GP9043

All samples were prepped within the recommended method holding time.

All samples were analyzed within the recommended method holding time.

All method blanks for this batch meet method specific criteria.

Samples T16411-10DUP, T16411-10MS were used as the QC samples for Perchlorate.

Accutest Laboratories Southeast (ALSE) certifies that this report meets the project requirements for analytical data produced for the samples as received at ALSE and as stated on the COC. ALSE certifies that the data meets the Data Quality Objectives for precision, accuracy and completeness as specified in the ALSE Quality Manual except as noted above. This report is to be used in its entirety. ALSE is not responsible for any assumptions of data quality if partial data packages are used.

Narrative prepared by:

Date: March 8, 2007

Ellen Pampel, Inorganic QA (signature on file)

Thursday, March 08, 2007

Sample Results

Report of Analysis

Accutest Laboratories

Report of Analysis

Client Sample ID:	LHSMW-23-FEB2007		
Lab Sample ID:	T16395-1	Date Sampled:	02/19/07
Matrix:	AQ - Ground Water	Date Received:	02/21/07
Method:	SW846 8260B	Percent Solids:	n/a
Project:	Longhorn Army Ammunition Plant		

	File ID	DF	Analyzed	By	Prep Date	Prep Batch	Analytical Batch
Run #1	F0078977.D	1	02/28/07	LJ	n/a	n/a	VF2305
Run #2							

	Purge Volume
Run #1	5.0 ml
Run #2	

VOA TCL List

CAS No.	Compound	Result	RL	MDL	Units	Q
67-64-1	Acetone	2.8 U	50	2.8	ug/l	
71-43-2	Benzene	0.23 U	2.0	0.23	ug/l	
75-27-4	Bromodichloromethane	0.33 U	2.0	0.33	ug/l	
75-25-2	Bromoform	0.65 U	2.0	0.65	ug/l	
108-90-7	Chlorobenzene	0.54 U	2.0	0.54	ug/l	
75-00-3	Chloroethane	0.46 U	2.0	0.46	ug/l	
67-66-3	Chloroform	0.66 U	2.0	0.66	ug/l	
75-15-0	Carbon disulfide	0.62 U	2.0	0.62	ug/l	
56-23-5	Carbon tetrachloride	0.52 U	2.0	0.52	ug/l	
75-34-3	1,1-Dichloroethane	0.52 U	2.0	0.52	ug/l	
75-35-4	1,1-Dichloroethylene	0.68 U	2.0	0.68	ug/l	
107-06-2	1,2-Dichloroethane	0.53 U	2.0	0.53	ug/l	
78-87-5	1,2-Dichloropropane	0.59 U	2.0	0.59	ug/l	
124-48-1	Dibromochloromethane	0.68 U	2.0	0.68	ug/l	
156-59-2	cis-1,2-Dichloroethylene	0.83 U	2.0	0.83	ug/l	
10061-01-5	cis-1,3-Dichloropropene	0.59 U	2.0	0.59	ug/l	
156-60-5	trans-1,2-Dichloroethylene	0.75 U	2.0	0.75	ug/l	
10061-02-6	trans-1,3-Dichloropropene	0.61 U	2.0	0.61	ug/l	
100-41-4	Ethylbenzene	0.48 U	2.0	0.48	ug/l	
591-78-6	2-Hexanone	1.9 U	10	1.9	ug/l	
108-10-1	4-Methyl-2-pentanone	7.3 U	10	7.3	ug/l	
74-83-9	Methyl bromide	0.47 U	2.0	0.47	ug/l	
74-87-3	Methyl chloride	0.60 U	2.0	0.60	ug/l	
75-09-2	Methylene chloride	0.67 U	5.0	0.67	ug/l	
78-93-3	Methyl ethyl ketone	3.0 U	10	3.0	ug/l	
100-42-5	Styrene	0.50 U	2.0	0.50	ug/l	
71-55-6	1,1,1-Trichloroethane	0.37 U	2.0	0.37	ug/l	
79-34-5	1,1,2,2-Tetrachloroethane	0.46 U	2.0	0.46	ug/l	
79-00-5	1,1,2-Trichloroethane	0.66 U	2.0	0.66	ug/l	
127-18-4	Tetrachloroethylene	0.74 U	2.0	0.74	ug/l	
108-88-3	Toluene	0.54 U	2.0	0.54	ug/l	
79-01-6	Trichloroethylene	1.4	2.0	0.63	ug/l	J

U = Not detected MDL - Method Detection Limit J = Indicates an estimated value
RL = Reporting Limit B = Indicates analyte found in associated method blank
E = Indicates value exceeds calibration range N = Indicates presumptive evidence of a compound

Accutest Laboratories

Report of Analysis

Client Sample ID:	LHSMW-23-FEB2007		
Lab Sample ID:	T16395-1	Date Sampled:	02/19/07
Matrix:	AQ - Ground Water	Date Received:	02/21/07
Method:	SW846 8260B	Percent Solids:	n/a
Project:	Longhorn Army Ammunition Plant		

VOA TCL List

CAS No.	Compound	Result	RL	MDL	Units	Q
75-01-4	Vinyl chloride	0.32 U	2.0	0.32	ug/l	
1330-20-7	Xylene (total)	1.1 U	6.0	1.1	ug/l	

CAS No.	Surrogate Recoveries	Run# 1	Run# 2	Limits
1868-53-7	Dibromofluoromethane	100%		73-139%
17060-07-0	1,2-Dichloroethane-D4	96%		66-139%
2037-26-5	Toluene-D8	104%		77-148%
460-00-4	4-Bromofluorobenzene	107%		84-150%

U = Not detected MDL - Method Detection Limit
RL = Reporting Limit
E = Indicates value exceeds calibration range

J = Indicates an estimated value
B = Indicates analyte found in associated method blank
N = Indicates presumptive evidence of a compound

Accutest Laboratories

Report of Analysis

Client Sample ID:	LHSMW-23-FEB2007		
Lab Sample ID:	T16395-1	Date Sampled:	02/19/07
Matrix:	AQ - Ground Water	Date Received:	02/21/07
Method:	RSKSOP-147/175	Percent Solids:	n/a
Project:	Longhorn Army Ammunition Plant		

	File ID	DF	Analyzed	By	Prep Date	Prep Batch	Analytical Batch
Run #1 [a]	XY025232.D	1	02/26/07	AFL	n/a	n/a	F:GXY991
Run #2							

CAS No.	Compound	Result	RL	MDL	Units	Q
74-82-8	Methane	9.65	0.50	0.30	ug/l	
74-84-0	Ethane	0.60 U	1.0	0.60	ug/l	
74-85-1	Ethene	0.80 U	1.0	0.80	ug/l	

(a) Analysis performed at Accutest Laboratories, Orlando, FL.

U = Not detected MDL - Method Detection Limit
RL = Reporting Limit
E = Indicates value exceeds calibration range

J = Indicates an estimated value
B = Indicates analyte found in associated method blank
N = Indicates presumptive evidence of a compound

Accutest Laboratories

Report of Analysis

Client Sample ID:	LHSMW-23-FEB2007		
Lab Sample ID:	T16395-1	Date Sampled:	02/19/07
Matrix:	AQ - Ground Water	Date Received:	02/21/07
		Percent Solids:	n/a
Project:	Longhorn Army Ammunition Plant		

General Chemistry

Analyte	Result	RL	MDL	Units	DF	Analyzed	By	Method
Perchlorate by IC								
Perchlorate [a]	4.0 U	10	4.0	ug/l	1	03/01/07 15:23	AFL	EPA 314
Alkalinity, Total as CaCO3	211	5.0	0.30	mg/l	1	03/03/07 08:15	EB	EPA 310.1
Carbon Dioxide	840	5.0		mg/l	1	03/06/07	RM	SM18 4500CO2D
Chloride	1180	1.0	0.57	mg/l	1	02/27/07 02:30	EB	EPA 325.3
Nitrogen, Nitrate [b]	-0.016 * <	0.10	0.0050	mg/l	1	02/26/07 13:03	LN	SM18 4500NO3E/NO2B
Nitrogen, Nitrate + Nitrite	0.0050 U	0.050	0.0050	mg/l	1	02/26/07 13:03	LN	EPA 353.2
Nitrogen, Nitrite	0.020 B	0.050	0.0030	mg/l	1	02/21/07 12:30	LN	EPA 353.2
Specific Conductivity [a]	5040	0.50	0.50	umhos/cm	1	03/06/07	AFL	EPA 120.1
Sulfate	902	40	2.6	mg/l	4	03/06/07 18:00	EB	EPA 375.3
Sulfide	U	0.20		mg/l	1	02/24/07 10:00	LN	EPA 376.1
Total Organic Carbon	8.0	1.0	0.092	mg/l	1	02/26/07 07:46	LN	EPA 415.1/9060
pH	5.7			su	1	02/21/07 01:30	EB	EPA 150.1/9040

(a) Analysis performed at Accutest Laboratories, Orlando, FL.
(b) Calculated as: (Nitrogen, Nitrate + Nitrite) - (Nitrogen, Nitrite)

RL = Reporting Limit
MDL = Method Detection Limit

U = Indicates a result < MDL
B = Indicates a result >= MDL but < RL

Accutest Laboratories

Report of Analysis

Client Sample ID:	46WW04-FEB2007		
Lab Sample ID:	T16395-2	Date Sampled:	02/19/07
Matrix:	AQ - Ground Water	Date Received:	02/21/07
Method:	SW846 8260B	Percent Solids:	n/a
Project:	Longhorn Army Ammunition Plant		

	File ID	DF	Analyzed	By	Prep Date	Prep Batch	Analytical Batch
Run #1	F0078978.D	1	02/28/07	LJ	n/a	n/a	VF2305
Run #2							

	Purge Volume
Run #1	5.0 ml
Run #2	

VOA TCL List

CAS No.	Compound	Result	RL	MDL	Units	Q
67-64-1	Acetone	2.8 U	50	2.8	ug/l	
71-43-2	Benzene	0.23 U	2.0	0.23	ug/l	
75-27-4	Bromodichloromethane	0.33 U	2.0	0.33	ug/l	
75-25-2	Bromoform	0.65 U	2.0	0.65	ug/l	
108-90-7	Chlorobenzene	0.54 U	2.0	0.54	ug/l	
75-00-3	Chloroethane	0.46 U	2.0	0.46	ug/l	
67-66-3	Chloroform	0.66 U	2.0	0.66	ug/l	
75-15-0	Carbon disulfide	0.62 U	2.0	0.62	ug/l	
56-23-5	Carbon tetrachloride	0.52 U	2.0	0.52	ug/l	
75-34-3	1,1-Dichloroethane	0.52 U	2.0	0.52	ug/l	
75-35-4	1,1-Dichloroethylene	0.68 U	2.0	0.68	ug/l	
107-06-2	1,2-Dichloroethane	0.53 U	2.0	0.53	ug/l	
78-87-5	1,2-Dichloropropane	0.59 U	2.0	0.59	ug/l	
124-48-1	Dibromochloromethane	0.68 U	2.0	0.68	ug/l	
156-59-2	cis-1,2-Dichloroethylene	0.83 U	2.0	0.83	ug/l	
10061-01-5	cis-1,3-Dichloropropene	0.59 U	2.0	0.59	ug/l	
156-60-5	trans-1,2-Dichloroethylene	0.75 U	2.0	0.75	ug/l	
10061-02-6	trans-1,3-Dichloropropene	0.61 U	2.0	0.61	ug/l	
100-41-4	Ethylbenzene	0.48 U	2.0	0.48	ug/l	
591-78-6	2-Hexanone	1.9 U	10	1.9	ug/l	
108-10-1	4-Methyl-2-pentanone	7.3 U	10	7.3	ug/l	
74-83-9	Methyl bromide	0.47 U	2.0	0.47	ug/l	
74-87-3	Methyl chloride	0.60 U	2.0	0.60	ug/l	
75-09-2	Methylene chloride	0.67 U	5.0	0.67	ug/l	
78-93-3	Methyl ethyl ketone	3.0 U	10	3.0	ug/l	
100-42-5	Styrene	0.50 U	2.0	0.50	ug/l	
71-55-6	1,1,1-Trichloroethane	0.37 U	2.0	0.37	ug/l	
79-34-5	1,1,2,2-Tetrachloroethane	0.46 U	2.0	0.46	ug/l	
79-00-5	1,1,2-Trichloroethane	0.66 U	2.0	0.66	ug/l	
127-18-4	Tetrachloroethylene	0.74 U	2.0	0.74	ug/l	
108-88-3	Toluene	0.54 U	2.0	0.54	ug/l	
79-01-6	Trichloroethylene	0.63 U	2.0	0.63	ug/l	

U = Not detected MDL - Method Detection Limit J = Indicates an estimated value
RL = Reporting Limit B = Indicates analyte found in associated method blank
E = Indicates value exceeds calibration range N = Indicates presumptive evidence of a compound

Accutest Laboratories

Report of Analysis

Client Sample ID:	46WW04-FEB2007		
Lab Sample ID:	T16395-2	Date Sampled:	02/19/07
Matrix:	AQ - Ground Water	Date Received:	02/21/07
Method:	SW846 8260B	Percent Solids:	n/a
Project:	Longhorn Army Ammunition Plant		

VOA TCL List

CAS No.	Compound	Result	RL	MDL	Units	Q
75-01-4	Vinyl chloride	0.32 U	2.0	0.32	ug/l	
1330-20-7	Xylene (total)	1.1 U	6.0	1.1	ug/l	

CAS No.	Surrogate Recoveries	Run# 1	Run# 2	Limits
1868-53-7	Dibromofluoromethane	102%		73-139%
17060-07-0	1,2-Dichloroethane-D4	101%		66-139%
2037-26-5	Toluene-D8	109%		77-148%
460-00-4	4-Bromofluorobenzene	118%		84-150%

U = Not detected MDL - Method Detection Limit
RL = Reporting Limit
E = Indicates value exceeds calibration range

J = Indicates an estimated value
B = Indicates analyte found in associated method blank
N = Indicates presumptive evidence of a compound

Accutest Laboratories

Report of Analysis

Client Sample ID:	46WW04-FEB2007		
Lab Sample ID:	T16395-2	Date Sampled:	02/19/07
Matrix:	AQ - Ground Water	Date Received:	02/21/07
Method:	RSKSOP-147/175	Percent Solids:	n/a
Project:	Longhorn Army Ammunition Plant		

	File ID	DF	Analyzed	By	Prep Date	Prep Batch	Analytical Batch
Run #1 [a]	XY025233.D	1	02/26/07	AFL	n/a	n/a	F:GXY991
Run #2							

CAS No.	Compound	Result	RL	MDL	Units	Q
74-82-8	Methane	1.27	0.50	0.30	ug/l	
74-84-0	Ethane	0.60 U	1.0	0.60	ug/l	
74-85-1	Ethene	0.80 U	1.0	0.80	ug/l	

(a) Analysis performed at Accutest Laboratories, Orlando, FL.

U = Not detected MDL - Method Detection Limit
RL = Reporting Limit
E = Indicates value exceeds calibration range

J = Indicates an estimated value
B = Indicates analyte found in associated method blank
N = Indicates presumptive evidence of a compound

Accutest Laboratories

Report of Analysis

3.2 3

Client Sample ID:	46WW04-FEB2007		
Lab Sample ID:	T16395-2	Date Sampled:	02/19/07
Matrix:	AQ - Ground Water	Date Received:	02/21/07
		Percent Solids:	n/a
Project:	Longhorn Army Ammunition Plant		

General Chemistry

Analyte	Result	RL	MDL	Units	DF	Analyzed	By	Method
Perchlorate by IC								
Perchlorate [a]	4.0 U	10	4.0	ug/l	1	03/01/07 15:37	AFL	EPA 314
Alkalinity, Total as CaCO3	356	5.0	0.30	mg/l	1	03/03/07 08:15	EB	EPA 310.1
Carbon Dioxide	280	5.0		mg/l	1	03/06/07	RM	SM18 4500CO2D
Chloride	782	1.0	0.57	mg/l	1	02/27/07 02:30	EB	EPA 325.3
Nitrogen, Nitrate [b]	<0.10	0.10	0.0050	mg/l	1	02/26/07 13:03	LN	SM18 4500NO3E/NO2B
Nitrogen, Nitrate + Nitrite	0.020 B	0.050	0.0050	mg/l	1	02/26/07 13:03	LN	EPA 353.2
Nitrogen, Nitrite	0.020 B	0.050	0.0030	mg/l	1	02/21/07 12:30	LN	EPA 353.2
Specific Conductivity [a]	4230	0.50	0.50	umhos/cm	1	03/06/07	AFL	EPA 120.1
Sulfate	1110	40	2.6	mg/l	4	03/06/07 18:00	EB	EPA 375.3
Sulfide	U	0.20		mg/l	1	02/24/07 10:00	LN	EPA 376.1
Total Organic Carbon	3.0	1.0	0.092	mg/l	1	02/26/07 07:46	LN	EPA 415.1/9060
pH	6.4			su	1	02/21/07 01:30	EB	EPA 150.1/9040

(a) Analysis performed at Accutest Laboratories, Orlando, FL.
(b) Calculated as: (Nitrogen, Nitrate + Nitrite) - (Nitrogen, Nitrite)

RL = Reporting Limit
MDL = Method Detection Limit

U = Indicates a result < MDL
B = Indicates a result >= MDL but < RL

Accutest Laboratories

Report of Analysis

Client Sample ID:	46WW01-FEB2007		
Lab Sample ID:	T16395-3	Date Sampled:	02/19/07
Matrix:	AQ - Ground Water	Date Received:	02/21/07
Method:	SW846 8260B	Percent Solids:	n/a
Project:	Longhorn Army Ammunition Plant		

	File ID	DF	Analyzed	By	Prep Date	Prep Batch	Analytical Batch
Run #1	F0078981.D	1	03/01/07	LJ	n/a	n/a	VF2305
Run #2							

	Purge Volume
Run #1	5.0 ml
Run #2	

VOA TCL List

CAS No.	Compound	Result	RL	MDL	Units	Q
67-64-1	Acetone	2.8 U	50	2.8	ug/l	
71-43-2	Benzene	0.23 U	2.0	0.23	ug/l	
75-27-4	Bromodichloromethane	0.33 U	2.0	0.33	ug/l	
75-25-2	Bromoform	0.65 U	2.0	0.65	ug/l	
108-90-7	Chlorobenzene	0.54 U	2.0	0.54	ug/l	
75-00-3	Chloroethane	0.46 U	2.0	0.46	ug/l	
67-66-3	Chloroform	0.66 U	2.0	0.66	ug/l	
75-15-0	Carbon disulfide	0.62 U	2.0	0.62	ug/l	
56-23-5	Carbon tetrachloride	0.52 U	2.0	0.52	ug/l	
75-34-3	1,1-Dichloroethane	0.52 U	2.0	0.52	ug/l	
75-35-4	1,1-Dichloroethylene	0.68 U	2.0	0.68	ug/l	
107-06-2	1,2-Dichloroethane	0.53 U	2.0	0.53	ug/l	
78-87-5	1,2-Dichloropropane	0.59 U	2.0	0.59	ug/l	
124-48-1	Dibromochloromethane	0.68 U	2.0	0.68	ug/l	
156-59-2	cis-1,2-Dichloroethylene	0.83 U	2.0	0.83	ug/l	
10061-01-5	cis-1,3-Dichloropropene	0.59 U	2.0	0.59	ug/l	
156-60-5	trans-1,2-Dichloroethylene	0.75 U	2.0	0.75	ug/l	
10061-02-6	trans-1,3-Dichloropropene	0.61 U	2.0	0.61	ug/l	
100-41-4	Ethylbenzene	0.48 U	2.0	0.48	ug/l	
591-78-6	2-Hexanone	1.9 U	10	1.9	ug/l	
108-10-1	4-Methyl-2-pentanone	7.3 U	10	7.3	ug/l	
74-83-9	Methyl bromide	0.47 U	2.0	0.47	ug/l	
74-87-3	Methyl chloride	0.60 U	2.0	0.60	ug/l	
75-09-2	Methylene chloride	0.67 U	5.0	0.67	ug/l	
78-93-3	Methyl ethyl ketone	3.0 U	10	3.0	ug/l	
100-42-5	Styrene	0.50 U	2.0	0.50	ug/l	
71-55-6	1,1,1-Trichloroethane	0.37 U	2.0	0.37	ug/l	
79-34-5	1,1,2,2-Tetrachloroethane	0.46 U	2.0	0.46	ug/l	
79-00-5	1,1,2-Trichloroethane	0.66 U	2.0	0.66	ug/l	
127-18-4	Tetrachloroethylene	0.74 U	2.0	0.74	ug/l	
108-88-3	Toluene	0.54 U	2.0	0.54	ug/l	
79-01-6	Trichloroethylene	0.63 U	2.0	0.63	ug/l	

U = Not detected MDL - Method Detection Limit
RL = Reporting Limit
E = Indicates value exceeds calibration range

J = Indicates an estimated value
B = Indicates analyte found in associated method blank
N = Indicates presumptive evidence of a compound

Accutest Laboratories

Report of Analysis

Client Sample ID:	46WW01-FEB2007		
Lab Sample ID:	T16395-3	Date Sampled:	02/19/07
Matrix:	AQ - Ground Water	Date Received:	02/21/07
Method:	SW846 8260B	Percent Solids:	n/a
Project:	Longhorn Army Ammunition Plant		

VOA TCL List

CAS No.	Compound	Result	RL	MDL	Units	Q
75-01-4	Vinyl chloride	0.32 U	2.0	0.32	ug/l	
1330-20-7	Xylene (total)	1.1 U	6.0	1.1	ug/l	

CAS No.	Surrogate Recoveries	Run# 1	Run# 2	Limits
1868-53-7	Dibromofluoromethane	99%		73-139%
17060-07-0	1,2-Dichloroethane-D4	94%		66-139%
2037-26-5	Toluene-D8	108%		77-148%
460-00-4	4-Bromofluorobenzene	121%		84-150%

U = Not detected MDL - Method Detection Limit
RL = Reporting Limit
E = Indicates value exceeds calibration range

J = Indicates an estimated value
B = Indicates analyte found in associated method blank
N = Indicates presumptive evidence of a compound

Accutest Laboratories

Report of Analysis

Client Sample ID:	46WW01-FEB2007		
Lab Sample ID:	T16395-3	Date Sampled:	02/19/07
Matrix:	AQ - Ground Water	Date Received:	02/21/07
Method:	RSKSOP-147/175	Percent Solids:	n/a
Project:	Longhorn Army Ammunition Plant		

	File ID	DF	Analyzed	By	Prep Date	Prep Batch	Analytical Batch
Run #1 [a]	XY025234.D	1	02/26/07	AFL	n/a	n/a	F:GXY991
Run #2							

CAS No.	Compound	Result	RL	MDL	Units	Q
74-82-8	Methane	0.52	0.50	0.30	ug/l	
74-84-0	Ethane	0.60 U	1.0	0.60	ug/l	
74-85-1	Ethene	0.80 U	1.0	0.80	ug/l	

(a) Analysis performed at Accutest Laboratories, Orlando, FL.

U = Not detected MDL - Method Detection Limit
RL = Reporting Limit
E = Indicates value exceeds calibration range

J = Indicates an estimated value
B = Indicates analyte found in associated method blank
N = Indicates presumptive evidence of a compound

Accutest Laboratories

Report of Analysis

Client Sample ID:	46WW01-FEB2007		
Lab Sample ID:	T16395-3	Date Sampled:	02/19/07
Matrix:	AQ - Ground Water	Date Received:	02/21/07
		Percent Solids:	n/a
Project:	Longhorn Army Ammunition Plant		

General Chemistry

Analyte	Result	RL	MDL	Units	DF	Analyzed	By	Method
Perchlorate by IC								
Perchlorate [a]	4.0 U	10	4.0	ug/l	1	03/01/07 15:52	AFL	EPA 314
Alkalinity, Total as CaCO3	38.0	5.0	0.30	mg/l	1	03/03/07 08:15	EB	EPA 310.1
Carbon Dioxide	96.0	5.0		mg/l	1	03/06/07	RM	SM18 4500CO2D
Chloride	2.6	1.0	0.57	mg/l	1	02/27/07 02:30	EB	EPA 325.3
Nitrogen, Nitrate [b]	< 0.10	0.10	0.0050	mg/l	1	02/26/07 13:03	LN	SM18 4500NO3E/NO2B
Nitrogen, Nitrate + Nitrite	0.050	0.050	0.0050	mg/l	1	02/26/07 13:03	LN	EPA 353.2
Nitrogen, Nitrite	0.020 B	0.050	0.0030	mg/l	1	02/21/07 12:30	LN	EPA 353.2
Specific Conductivity	113	1.0		umhos/cm	1	03/05/07 08:50	RM	EPA 120.1
Sulfate	48.0	20	2.6	mg/l	2	03/06/07 18:00	EB	EPA 375.3
Sulfide	U	0.20		mg/l	1	02/24/07 10:00	LN	EPA 376.1
Total Organic Carbon	3.0	1.0	0.092	mg/l	1	02/26/07 07:46	LN	EPA 415.1/9060
pH	5.9			su	1	02/21/07 01:30	EB	EPA 150.1/9040

(a) Analysis performed at Accutest Laboratories, Orlando, FL.
(b) Calculated as: (Nitrogen, Nitrate + Nitrite) - (Nitrogen, Nitrite)

RL = Reporting Limit
MDL = Method Detection Limit

U = Indicates a result < MDL
B = Indicates a result > = MDL but < RL

Accutest Laboratories

Report of Analysis

3.4 3

Client Sample ID:	TRIP BLANK 021907		
Lab Sample ID:	T16395-4	Date Sampled:	02/19/07
Matrix:	AQ - Trip Blank Water	Date Received:	02/21/07
Method:	SW846 8260B	Percent Solids:	n/a
Project:	Longhorn Army Ammunition Plant		

	File ID	DF	Analyzed	By	Prep Date	Prep Batch	Analytical Batch
Run #1	F0078975.D	1	02/28/07	LJ	n/a	n/a	VF2305
Run #2							

	Purge Volume
Run #1	5.0 ml
Run #2	

VOA TCL List

CAS No.	Compound	Result	RL	MDL	Units	Q
67-64-1	Acetone	2.8 U	50	2.8	ug/l	
71-43-2	Benzene	0.23 U	2.0	0.23	ug/l	
75-27-4	Bromodichloromethane	0.33 U	2.0	0.33	ug/l	
75-25-2	Bromoform	0.65 U	2.0	0.65	ug/l	
108-90-7	Chlorobenzene	0.54 U	2.0	0.54	ug/l	
75-00-3	Chloroethane	0.46 U	2.0	0.46	ug/l	
67-66-3	Chloroform	0.66 U	2.0	0.66	ug/l	
75-15-0	Carbon disulfide	0.62 U	2.0	0.62	ug/l	
56-23-5	Carbon tetrachloride	0.52 U	2.0	0.52	ug/l	
75-34-3	1,1-Dichloroethane	0.52 U	2.0	0.52	ug/l	
75-35-4	1,1-Dichloroethylene	0.68 U	2.0	0.68	ug/l	
107-06-2	1,2-Dichloroethane	0.53 U	2.0	0.53	ug/l	
78-87-5	1,2-Dichloropropane	0.59 U	2.0	0.59	ug/l	
124-48-1	Dibromochloromethane	0.68 U	2.0	0.68	ug/l	
156-59-2	cis-1,2-Dichloroethylene	0.83 U	2.0	0.83	ug/l	
10061-01-5	cis-1,3-Dichloropropene	0.59 U	2.0	0.59	ug/l	
156-60-5	trans-1,2-Dichloroethylene	0.75 U	2.0	0.75	ug/l	
10061-02-6	trans-1,3-Dichloropropene	0.61 U	2.0	0.61	ug/l	
100-41-4	Ethylbenzene	0.48 U	2.0	0.48	ug/l	
591-78-6	2-Hexanone	1.9 U	10	1.9	ug/l	
108-10-1	4-Methyl-2-pentanone	7.3 U	10	7.3	ug/l	
74-83-9	Methyl bromide	0.47 U	2.0	0.47	ug/l	
74-87-3	Methyl chloride	0.60 U	2.0	0.60	ug/l	
75-09-2	Methylene chloride	0.67 U	5.0	0.67	ug/l	
78-93-3	Methyl ethyl ketone	3.0 U	10	3.0	ug/l	
100-42-5	Styrene	0.50 U	2.0	0.50	ug/l	
71-55-6	1,1,1-Trichloroethane	0.37 U	2.0	0.37	ug/l	
79-34-5	1,1,2,2-Tetrachloroethane	0.46 U	2.0	0.46	ug/l	
79-00-5	1,1,2-Trichloroethane	0.66 U	2.0	0.66	ug/l	
127-18-4	Tetrachloroethylene	0.74 U	2.0	0.74	ug/l	
108-88-3	Toluene	0.54 U	2.0	0.54	ug/l	
79-01-6	Trichloroethylene	0.63 U	2.0	0.63	ug/l	

U = Not detected MDL - Method Detection Limit J = Indicates an estimated value
RL = Reporting Limit B = Indicates analyte found in associated method blank
E = Indicates value exceeds calibration range N = Indicates presumptive evidence of a compound

Accutest Laboratories

Report of Analysis

Client Sample ID:	TRIP BLANK 021907		
Lab Sample ID:	T16395-4	Date Sampled:	02/19/07
Matrix:	AQ - Trip Blank Water	Date Received:	02/21/07
Method:	SW846 8260B	Percent Solids:	n/a
Project:	Longhorn Army Ammunition Plant		

VOA TCL List

CAS No.	Compound	Result	RL	MDL	Units	Q
75-01-4	Vinyl chloride	0.32 U	2.0	0.32	ug/l	
1330-20-7	Xylene (total)	1.1 U	6.0	1.1	ug/l	

CAS No.	Surrogate Recoveries	Run# 1	Run# 2	Limits
1868-53-7	Dibromofluoromethane	100%		73-139%
17060-07-0	1,2-Dichloroethane-D4	96%		66-139%
2037-26-5	Toluene-D8	107%		77-148%
460-00-4	4-Bromofluorobenzene	115%		84-150%

U = Not detected MDL - Method Detection Limit
RL = Reporting Limit
E = Indicates value exceeds calibration range

J = Indicates an estimated value
B = Indicates analyte found in associated method blank
N = Indicates presumptive evidence of a compound

Misc. Forms

Custody Documents and Other Forms

Includes the following where applicable:

- Chain of Custody

T16395

Shaw™
Shaw E & I, Inc.

ANALYSIS REQUEST AND CHAIN-OF-CUSTODY RECORD

REFERENCE COC NO.: L HAAP - Team 3-01A

PAGE 1 OF 1

Bill To: Diane Meyer, Shaw E & I, 3010 Briarpark Drive, Houston, TX 77042

Report To: Diane Meyer, Shaw E & I, 3010 Briarpark Drive, Houston, TX 77042

Project Name/No.: Lonhorn Army Ammunition Plant
Sample Team Member: Allen Willmore - 713-247-9292
Project Contact/Phone: Kay Everette - 713-996-4421
Project Manager: Praveen Srivastav
Project No.: 117591
Required Report Date:

Sample Shipment Date:
Laboratory Destination: Accutest
Laboratory Contact: Agnes - 713-271-4700
Lab Address: 10165 Harwin Dr. # 150, Houston, TX 77036
Carrier Waybill No.:

Sample Number	Sample Type/ Description	Date/Time Collected	Container Type	Sample Volume	Pre-servative	Requested Testing Program	Condition on Receipt	Disposal Record
~~46WW02~~						~~Full Project list - see below~~		
~~LHSMW-18~~						~~Full Project list - see below~~		
~~LHSMW-19~~						~~Full Project list - see below~~		
~~46WW04~~						~~Full Project list - see below~~		
~~46WW05~~						~~Full Project list - see below~~		
~~LHSMW-22~~						~~Full Project list - see below~~		
1 LHSMW-23 - ~~Feb07~~ Feb2007	Water	2/19/07 13:20	See	Below		Full Project list - see below		
						Full Project list - see below		
TB-	TB 2/19/07	2/19/07				Vocs by SW8260B		

Full Project List:

VOC-FULL by SW8260B	3 - 40 ml VOA vials w/ HCL	ALKALINITY by 310.1	1 - ~~500~~ 500 ml HDPE
ANIONS by 300.0	1 - ~~500~~ 1000 ml HDPE	TOC by ~~415.1~~	~~1 - 100 ml HDPE w/ H2SO4~~
SULFIDES by 376.2	1 - 500 ml HDPE w/ ZN Acetate	~~MN, DISS IRON by SW6010B~~	~~1 - 250 ml HDPE~~
PERCHLORATE by 314.0	1 - 500 ml HDPE		
GASES by RSK-SOP 175 + COA	~~2~~ 3 - 40 ml VOA vials		

3-40mL Voa Vials w/ HCL

~~Trip Blank~~ 2/19/07

Special Instructions:

Sample Disposal: Return to Client: ___ Disposal by Lab: X Archive: ___

Turnaround Time: Normal: X Rush:

Level of QC Required: Definitive: X Project Specific: ___

1. Relinquished by:	Date: 2/19/06 Time: 16:30	1. Received by:	Date: 2/20/07 Time: 07:30
2. Relinquished by:	Date: 2/20/07 Time: 08:30	2. Received by:	Date: Time:
3. Relinquished by:	Date: Time:	2. Received by:	Date: 2/21/07 Time: 10:10

Shaw ~~Corporation~~

Comments:

4.1 4

T16395: Chain of Custody
Page 1 of 4

T16395

Shaw
Shaw E & I, Inc.

ANALYSIS REQUEST AND CHAIN-OF-CUSTODY RECORD

REFERENCE COC NO.: LHAAP-Team 1-01A

PAGE 1 OF 1

Bill To: Diane Meyer, Shaw E & I, 3010 Briarpark Drive, Houston, TX 77042

Report To: Diane Meyer, Shaw E & I, 3010 Briarpark Drive, Houston, TX 77042

Project Name/No: Longhorn Army Ammunition Plant
Sample Team Member: Allen Willmore - 713-247-9292
Project Contact/Phone: Kay Everette - 713-996-4421
Project Manager: Praveen Srivastav
Project No.: 117591
Required Report Date:

Sample Shipment Date:
Laboratory Destination: Accutest
Laboratory Contact: Agnes - 713-271-4700
Lab Address: 10165 Harwin Dr. # 150, Houston, TX 77036
Carrier Waybill No.:

Sample Number	Sample Type/ Description	Date/Time Collected	Container Type	Sample Volume	Pre-servative	Requested Testing Program	Condition on Receipt	Disposal Record
~~46WW02~~						~~Full Project list - see below~~		
~~LHSMW-18~~						~~Full Project list - see below~~		
~~LHSMW-19~~						~~Full Project list - see below~~		
2 46WW04 Feb 2007	Ground Water	2-19-07 1405	See Below			Full Project list - see below		
~~46WW01~~						~~Full Project list - see below~~		
~~LHSMW-22~~						~~Full Project list - see below~~		
~~LHSMW-23~~						~~Full Project list - see below~~		
						~~Full Project list - see below~~		
TB- Feb 2007	TB Feb 2007					Vocs by SW8260B		

Full Project List:

VOC-FULL by SW8260B	3 - 40 ml VOA vials w/ HCl.	ALKALINITY by 310.1	1 - ~~250~~ 500 ml HDPE
ANIONS by 300.0	1 - ~~500~~ 1000 ml HDPE	TOC by ~~SW~~	~~1 - 100 ml HDPE w/ H2SO4~~ 3-40 mL voa vials w/HCL
SULFIDES by 376.2	1 - 500 ml HDPE w/ ZN Acetate	~~MDL DISSOLVED~~ by SW6010B	~~1 - 250 ml HDPE~~
PERCHLORATE by 314.0	1 - 500 ml HDPE	TRip Blank Feb 2007	
GASES by RSK-SOP 175 + CO_2	3 - 40 ml VOA vials		

Special Instructions:

Sample Disposal: Return to Client: ___ Disposal by Lab: X Archive: ___

Turnaround Time: Normal: X Rush:

Level of QC Required: Definitive: X Project Specific:

1. Relinquished by: Allen Willmore	Date: 2/19/07 Time: 16:30	1. Received by: Scott Boesiger	Date: 2/20/07 Time: 07:30
2. Relinquished by: Scott Boesiger	Date: 2/20/07 Time: 08:30	2. Received by:	Date: Time:
3. Relinquished by:	Date: Time:	2. Received by:	Date: 2/20/07 Time: 10:10

Comments:

4.1 4

T16395: Chain of Custody
Page 2 of 4

ACCUTEST Laboratories
T16395

LHAAP - Team 2 - O/A

T16395

Shaw
Shaw E & I, Inc.

ANALYSIS REQUEST AND CHAIN-OF-CUSTODY RECORD

REFERENCE COC NO.:

PAGE 1 OF

Project Name/No: Longhorn Army Ammunition Plant
Sample Team Member: Allen Willmore - 713-247-9292
Project Contact/Phone: Kay Everette - 713-996-4421
Project Manager: Praveen Srivastav
Project No.: 117591
Required Report Date:

Sample Shipment Date:
Laboratory Destination: Accutest
Laboratory Contact: Agnes - 713-271-4700
Lab Address 10165 Harwin Dr. # 150
Houston, TX 77036
Carrier Waybill No.:

Bill To: Diane Meyer
Shaw E & I
3010 Briarpark Drive
Houston, TX 77042

Report To: Diane Meyer
Shaw E & I
3010 Briarpark Drive
Houston, TX 77042

Sample Number	Sample Type/ Description	Date/Time Collected	Container Type	Sample Volume	Pre-servative	Requested Testing Program	Condition on Receipt	Disposal Record
~~46WW02~~						Full Project list - see below		
~~LHSMW-18~~						Full Project list - see below		
~~LHSMW-19~~						Full Project list - see below		
~~46WW04~~						Full Project list - see below		
3 46WW01 - FEB 2007	GW	02-19-07/1456	See Below			Full Project list - see below		
~~LHSMW-22~~						Full Project list - see below		
~~LHSMW-23~~						Full Project list - see below		
						Full Project list - see below		
4 TB-021907	TB-021907					Vocs by SW8260B		

Full Project List:

VOC-FULL by SW8260B	3 - 40 ml VOA vials w/ HCl.	ALKALINITY by 310.1	1 - ~~400~~ 500 ml HDPE
ANIONS by 300.0	1 - ~~500~~ 125 ml HDPE	TOC by 415.1	~~1 - 100 ml HDPE w/ H2SO4~~ 3-40 ml VOA vials w/HCL
SULFIDES by 376.2	1 - 500 ml HDPE w/ ZN Acetate	~~MN - DISS IRON by SW6010B~~ RSK	~~1 - 250 ml HDPE~~
PERCHLORATE by 314.0	1 - 500 ml HDPE		
GASES by RSK-SOP 175 pCO_2	3 - 40 ml VOA vials w/HCL	TRIP BLANK	

Special Instructions:

Sample Disposal: Return to Client: ___ Disposal by Lab: X Archive: ___

Turnaround Time: Normal: X Rush: ___

Level of QC Required: Definitive: X Project Specific: ___

1. Relinquished by: [signature] SHAW	Date: 2/19/07 Time: 1800	1. Received by: Scott Beasinger	Date: 2/20/07 Time: 07:30
2. Relinquished by: Scott Beasinger	Date: 2/20/07 Time: 08:30	2. Received by:	Date: Time:
3. Relinquished by:	Date: Time:	2. Received by: R. Rodney	Date: 2/21/07 Time: 10:10

Comments:

4.1 4

ACCUTEST

SAMPLE RECEIPT LOG

JOB #: T16395

DATE/TIME RECEIVED: 2/21/07 / 10:10

CLIENT: Shaw

INITIALS: AR

Condition/Variance (Circle "Y" for yes and "N" for no or NA. If "N" is circled, see variance for explanation):

1. (Y) N Sample received in undamaged condition.
2. (Y) N Samples received within temp. range.
3. (Y) N Sample received with proper pH.
4. (Y) N Sample received in proper containers.
5. (Y) N Sample volume sufficient for analysis.
6. (Y) N Sample received with chain of custody.
7. (Y) N Chain of Custody matches **sample IDs and analysis** on containers.
8. (Y) N Samples Headspace acceptable
9. (Y) N NA Custody seal received intact and tamper not evident on cooler.
10. Y N (NA) Custody seal received intact and tamper not evident on bottles.

SAMPLE or FIELD ID	BOTTLE #	DATE SAMPLED	MATRIX	VOLUME	LOCATION	PRESERV.	PH
1-3	1-6	2/19	AQ	40ml.	VREF	1,2,3,4,5,6	U, <2, >12, NA
	7-9			⊥	2G	1,2,3,4,5,6	U, <2, >12, NA
	10			P1000		1,2,3,4,5,6	U, <2, >12, NA
	11			P500		1,2,3,4,5,6	U, <2, >12, NA
	12			⊥		1,2,3,4,5,6	U, <2, >12, NA
	13	⊥		⊥	⊥	1,2,3,4,5,6	U, <2, >12, NA
(+b.) 4	1-2	2/19 ~~N/A~~	⊥	40ml.	VREF	1,2,3,4,5,6	U, <2, >12, NA
						1,2,3,4,5,6	U, <2, >12, NA
						1,2,3,4,5,6	U, <2, >12, NA
						1,2,3,4,5,6	U, <2, >12, NA
						1,2,3,4,5,6	U, <2, >12, NA
						1,2,3,4,5,6	U, <2, >12, NA
						1,2,3,4,5,6	U, <2, >12, NA
						1,2,3,4,5,6	U, <2, >12, NA
						1,2,3,4,5,6	U, <2, >12, NA
						1,2,3,4,5,6	U, <2, >12, NA

AR 2-21-07

LOCATION: WI: Walk-in VR: Volatile Refrig. SUB: Subcontract EF: Encore Freezer

PRESERVATIVES: 1: None 2: HCL 3: HNO3 4: H2SO4 5: NAOH 6: Other

Comments:

* pH of waters checked excluding volatiles

pH of solids N/A

Delivery method: Courier: UPS

COOLER TEMP: 3.0 COOLER TEMP:

COOLER TEMP: COOLER TEMP:

Form: SM012, Rev.07/28/06, QAO

T16395: Chain of Custody

Page 4 of 4

ACCUTEST Laboratories T16395

4.1 4

0007706

GC/MS Volatiles

5

QC Data Summaries

Includes the following where applicable:

- Method Blank Summaries
- Blank Spike Summaries
- Matrix Spike and Duplicate Summaries
- Instrument Performance Checks (BFB)
- Internal Standard Area Summaries
- Surrogate Recovery Summaries
- Initial and Continuing Calibration Summaries

Method Blank Summary

Job Number: T16395
Account: ITTXHO Shaw E & I, Inc.
Project: Longhorn Army Ammunition Plant

Sample	File ID	DF	Analyzed	By	Prep Date	Prep Batch	Analytical Batch
VF2305-MB	F0078974.D	1	02/28/07	LJ	n/a	n/a	VF2305

The QC reported here applies to the following samples: Method: SW846 8260B

T16395-1, T16395-2, T16395-3, T16395-4

CAS No.	Compound	Result	RL	MDL	Units	Q
67-64-1	Acetone	ND	50	2.8	ug/l	
71-43-2	Benzene	ND	2.0	0.23	ug/l	
75-27-4	Bromodichloromethane	ND	2.0	0.33	ug/l	
75-25-2	Bromoform	ND	2.0	0.65	ug/l	
108-90-7	Chlorobenzene	ND	2.0	0.54	ug/l	
75-00-3	Chloroethane	ND	2.0	0.46	ug/l	
67-66-3	Chloroform	ND	2.0	0.66	ug/l	
75-15-0	Carbon disulfide	ND	2.0	0.62	ug/l	
56-23-5	Carbon tetrachloride	ND	2.0	0.52	ug/l	
75-34-3	1,1-Dichloroethane	ND	2.0	0.52	ug/l	
75-35-4	1,1-Dichloroethylene	ND	2.0	0.68	ug/l	
107-06-2	1,2-Dichloroethane	ND	2.0	0.53	ug/l	
78-87-5	1,2-Dichloropropane	ND	2.0	0.59	ug/l	
124-48-1	Dibromochloromethane	ND	2.0	0.68	ug/l	
156-59-2	cis-1,2-Dichloroethylene	ND	2.0	0.83	ug/l	
10061-01-5	cis-1,3-Dichloropropene	ND	2.0	0.59	ug/l	
156-60-5	trans-1,2-Dichloroethylene	ND	2.0	0.75	ug/l	
10061-02-6	trans-1,3-Dichloropropene	ND	2.0	0.61	ug/l	
100-41-4	Ethylbenzene	ND	2.0	0.48	ug/l	
591-78-6	2-Hexanone	ND	10	1.9	ug/l	
108-10-1	4-Methyl-2-pentanone	ND	10	7.3	ug/l	
74-83-9	Methyl bromide	ND	2.0	0.47	ug/l	
74-87-3	Methyl chloride	ND	2.0	0.60	ug/l	
75-09-2	Methylene chloride	ND	5.0	0.67	ug/l	
78-93-3	Methyl ethyl ketone	ND	10	3.0	ug/l	
100-42-5	Styrene	ND	2.0	0.50	ug/l	
71-55-6	1,1,1-Trichloroethane	ND	2.0	0.37	ug/l	
79-34-5	1,1,2,2-Tetrachloroethane	ND	2.0	0.46	ug/l	
79-00-5	1,1,2-Trichloroethane	ND	2.0	0.66	ug/l	
127-18-4	Tetrachloroethylene	ND	2.0	0.74	ug/l	
108-88-3	Toluene	ND	2.0	0.54	ug/l	
79-01-6	Trichloroethylene	ND	2.0	0.63	ug/l	
75-01-4	Vinyl chloride	ND	2.0	0.32	ug/l	
1330-20-7	Xylene (total)	ND	6.0	1.1	ug/l	

Method Blank Summary

Job Number: T16395
Account: ITTXHO Shaw E & I, Inc.
Project: Longhorn Army Ammunition Plant

Sample	File ID	DF	Analyzed	By	Prep Date	Prep Batch	Analytical Batch
VF2305-MB	F0078974.D	1	02/28/07	LJ	n/a	n/a	VF2305

The QC reported here applies to the following samples: Method: SW846 8260B

T16395-1, T16395-2, T16395-3, T16395-4

CAS No.	Surrogate Recoveries		Limits
1868-53-7	Dibromofluoromethane	100%	73-139%
17060-07-0	1,2-Dichloroethane-D4	93%	66-139%
2037-26-5	Toluene-D8	106%	77-148%
460-00-4	4-Bromofluorobenzene	113%	84-150%

Blank Spike Summary

Job Number: T16395
Account: ITTXHO Shaw E & I, Inc.
Project: Longhorn Army Ammunition Plant

Sample	File ID	DF	Analyzed	By	Prep Date	Prep Batch	Analytical Batch
VF2305-BS	F0078972.D	1	02/28/07	LJ	n/a	n/a	VF2305

The QC reported here applies to the following samples: Method: SW846 8260B

T16395-1, T16395-2, T16395-3, T16395-4

CAS No.	Compound	Spike ug/l	BSP ug/l	BSP %	Limits
67-64-1	Acetone	125	93.3	75	31-158
71-43-2	Benzene	25	22.5	90	67-118
75-27-4	Bromodichloromethane	25	20.4	82	66-115
75-25-2	Bromoform	25	21.2	85	57-119
108-90-7	Chlorobenzene	25	21.9	88	72-116
75-00-3	Chloroethane	25	25.0	100	61-135
67-66-3	Chloroform	25	22.7	91	66-117
75-15-0	Carbon disulfide	25	21.6	86	39-136
56-23-5	Carbon tetrachloride	25	25.2	101	67-131
75-34-3	1,1-Dichloroethane	25	22.7	91	63-125
75-35-4	1,1-Dichloroethylene	25	23.2	93	52-143
107-06-2	1,2-Dichloroethane	25	21.9	88	61-120
78-87-5	1,2-Dichloropropane	25	21.8	87	64-118
124-48-1	Dibromochloromethane	25	20.9	84	67-117
156-59-2	cis-1,2-Dichloroethylene	25	21.3	85	65-116
10061-01-5	cis-1,3-Dichloropropene	25	21.6	86	67-118
156-60-5	trans-1,2-Dichloroethylene	25	23.0	92	66-128
10061-02-6	trans-1,3-Dichloropropene	25	22.4	90	73-126
100-41-4	Ethylbenzene	25	22.2	89	71-119
591-78-6	2-Hexanone	125	99.1	79	45-132
108-10-1	4-Methyl-2-pentanone	125	101	81	46-127
74-83-9	Methyl bromide	25	21.6	86	51-126
74-87-3	Methyl chloride	25	21.3	85	47-130
75-09-2	Methylene chloride	25	19.5	78	53-130
78-93-3	Methyl ethyl ketone	125	96.9	78	47-128
100-42-5	Styrene	25	18.8	75	69-115
71-55-6	1,1,1-Trichloroethane	25	23.6	94	67-128
79-34-5	1,1,2,2-Tetrachloroethane	25	20.8	83	57-121
79-00-5	1,1,2-Trichloroethane	25	21.7	87	62-117
127-18-4	Tetrachloroethylene	25	24.5	98	72-128
108-88-3	Toluene	25	22.5	90	70-121
79-01-6	Trichloroethylene	25	23.6	94	69-120
75-01-4	Vinyl chloride	25	23.0	92	59-145
1330-20-7	Xylene (total)	75	67.4	90	72-120

Blank Spike Summary

Job Number: T16395
Account: ITTXHO Shaw E & I, Inc.
Project: Longhorn Army Ammunition Plant

Sample	File ID	DF	Analyzed	By	Prep Date	Prep Batch	Analytical Batch
VF2305-BS	F0078972.D	1	02/28/07	LJ	n/a	n/a	VF2305

5.2 5

The QC reported here applies to the following samples: Method: SW846 8260B

T16395-1, T16395-2, T16395-3, T16395-4

CAS No.	Surrogate Recoveries	BSP	Limits
1868-53-7	Dibromofluoromethane	99%	73-139%
17060-07-0	1,2-Dichloroethane-D4	94%	66-139%
2037-26-5	Toluene-D8	102%	77-148%
460-00-4	4-Bromofluorobenzene	102%	84-150%

Matrix Spike/Matrix Spike Duplicate Summary

Job Number: T16395
Account: ITTXHO Shaw E & I, Inc.
Project: Longhorn Army Ammunition Plant

Sample	File ID	DF	Analyzed	By	Prep Date	Prep Batch	Analytical Batch
T16395-2MS	F0078979.D	1	02/28/07	LJ	n/a	n/a	VF2305
T16395-2MSD	F0078980.D	1	02/28/07	LJ	n/a	n/a	VF2305
T16395-2	F0078978.D	1	02/28/07	LJ	n/a	n/a	VF2305

5.3

5

The QC reported here applies to the following samples: Method: SW846 8260B

T16395-1, T16395-2, T16395-3, T16395-4

CAS No.	Compound	T16395-2 ug/l	Q	Spike ug/l	MS ug/l	MS %	MSD ug/l	MSD %	RPD	Limits Rec/RPD
67-64-1	Acetone	50 U		125	107	86	97.6	78	9	39-130/26
71-43-2	Benzene	2.0 U		25	24.7	99	25.2	101	2	65-122/15
75-27-4	Bromodichloromethane	2.0 U		25	22.6	90	23.2	93	3	64-119/22
75-25-2	Bromoform	2.0 U		25	23.9	96	22.7	91	5	50-123/28
108-90-7	Chlorobenzene	2.0 U		25	24.3	97	25.0	100	3	72-118/20
75-00-3	Chloroethane	2.0 U		25	25.7	103	25.4	102	1	60-136/25
67-66-3	Chloroform	2.0 U		25	25.0	100	25.3	101	1	65-120/20
75-15-0	Carbon disulfide	2.0 U		25	23.8	95	24.2	97	2	37-140/24
56-23-5	Carbon tetrachloride	2.0 U		25	27.6	110	28.0	112	1	64-135/23
75-34-3	1,1-Dichloroethane	2.0 U		25	25.8	103	26.6	106	3	65-126/21
75-35-4	1,1-Dichloroethylene	2.0 U		25	25.8	103	25.6	102	1	55-140/25
107-06-2	1,2-Dichloroethane	2.0 U		25	25.4	102	24.2	97	5	57-125/25
78-87-5	1,2-Dichloropropane	2.0 U		25	24.6	98	25.0	100	2	63-121/22
124-48-1	Dibromochloromethane	2.0 U		25	23.1	92	22.8	91	1	60-123/23
156-59-2	cis-1,2-Dichloroethylene	2.0 U		25	23.6	94	24.2	97	3	62-120/24
10061-01-5	cis-1,3-Dichloropropene	2.0 U		25	23.3	93	24.0	96	3	61-119/23
156-60-5	trans-1,2-Dichloroethylene	2.0 U		25	25.0	100	25.5	102	2	64-130/22
10061-02-6	trans-1,3-Dichloropropene	2.0 U		25	24.4	98	24.8	99	2	65-129/23
100-41-4	Ethylbenzene	2.0 U		25	24.3	97	24.9	100	2	70-123/18
591-78-6	2-Hexanone	10 U		125	119	95	111	89	7	41-137/27
108-10-1	4-Methyl-2-pentanone	10 U		125	124	99	115	92	8	41-133/22
74-83-9	Methyl bromide	2.0 U		25	23.7	95	22.6	90	5	47-129/27
74-87-3	Methyl chloride	2.0 U		25	24.1	96	22.2	89	8	45-133/24
75-09-2	Methylene chloride	5.0 U		25	23.4	94	23.2	93	1	49-128/21
78-93-3	Methyl ethyl ketone	10 U		125	114	91	105	84	8	43-125/29
100-42-5	Styrene	2.0 U		25	20.3	81	20.7	83	2	65-120/21
71-55-6	1,1,1-Trichloroethane	2.0 U		25	26.5	106	27.2	109	3	68-131/21
79-34-5	1,1,2,2-Tetrachloroethane	2.0 U		25	22.6	90	21.1	84	7	50-128/22
79-00-5	1,1,2-Trichloroethane	2.0 U		25	23.7	95	23.5	94	1	58-120/22
127-18-4	Tetrachloroethylene	2.0 U		25	26.6	106	27.4	110	3	69-132/21
108-88-3	Toluene	2.0 U		25	24.6	98	25.5	102	4	70-123/18
79-01-6	Trichloroethylene	2.0 U		25	25.0	100	25.4	102	2	70-120/19
75-01-4	Vinyl chloride	2.0 U		25	25.7	103	24.0	96	7	51-147/24
1330-20-7	Xylene (total)	6.0 U		75	74.5	99	76.1	101	2	71-122/16

Matrix Spike/Matrix Spike Duplicate Summary

Job Number: T16395
Account: ITTXHO Shaw E & I, Inc.
Project: Longhorn Army Ammunition Plant

Sample	File ID	DF	Analyzed	By	Prep Date	Prep Batch	Analytical Batch
T16395-2MS	F0078979.D	1	02/28/07	LJ	n/a	n/a	VF2305
T16395-2MSD	F0078980.D	1	02/28/07	LJ	n/a	n/a	VF2305
T16395-2	F0078978.D	1	02/28/07	LJ	n/a	n/a	VF2305

The QC reported here applies to the following samples: Method: SW846 8260B

T16395-1, T16395-2, T16395-3, T16395-4

CAS No.	Surrogate Recoveries	MS	MSD	T16395-2	Limits
1868-53-7	Dibromofluoromethane	99%	104%	102%	73-139%
17060-07-0	1,2-Dichloroethane-D4	98%	97%	101%	66-139%
2037-26-5	Toluene-D8	103%	107%	109%	77-148%
460-00-4	4-Bromofluorobenzene	100%	100%	118%	84-150%

Instrument Performance Check (BFB)

Job Number: T16395
Account: ITTXHO Shaw E & I, Inc.
Project: Longhorn Army Ammunition Plant

Sample:	VF2305-BFB	Injection Date:	02/28/07
Lab File ID:	F0078963.D	Injection Time:	14:36
Instrument ID:	GCMSF		

5.4 5

m/e	Ion Abundance Criteria	Raw Abundance	% Relative Abundance		Pass/Fail
50	15.0 - 40.0% of mass 95	7281	16.0		Pass
75	30.0 - 60.0% of mass 95	18364	40.3		Pass
95	Base peak, 100% relative abundance	45541	100.0		Pass
96	5.0 - 9.0% of mass 95	2793	6.1		Pass
173	Less than 2.0% of mass 174	107	0.23	(0.27) [a]	Pass
174	50.0 - 100.0% of mass 95	39123	85.9		Pass
175	5.0 - 9.0% of mass 174	3023	6.6	(7.7) [a]	Pass
176	95.0 - 101.0% of mass 174	37355	82.0	(95.5) [a]	Pass
177	5.0 - 9.0% of mass 176	2802	6.2	(7.5) [b]	Pass

(a) Value is % of mass 174
(b) Value is % of mass 176

This check applies to the following Samples, MS, MSD, Blanks, and Standards:

Lab Sample ID	Lab File ID	Date Analyzed	Time Analyzed	Hours Lapsed	Client Sample ID
VF2305-IC2305	F0078964.D	02/28/07	15:10	00:34	Initial cal 2
VF2305-IC2305	F0078965.D	02/28/07	15:41	01:05	Initial cal 5
VF2305-IC2305	F0078966.D	02/28/07	16:12	01:36	Initial cal 20
VF2305-ICC2305	F0078967.D	02/28/07	16:44	02:08	Initial cal 40
VF2305-IC2305	F0078968.D	02/28/07	17:16	02:40	Initial cal 70
VF2305-IC2305	F0078969.D	02/28/07	17:46	03:10	Initial cal 100
VF2305-IC2305	F0078970.D	02/28/07	18:18	03:42	Initial cal 200
VF2305-BS	F0078972.D	02/28/07	19:21	04:45	Blank Spike
VF2305-MB	F0078974.D	02/28/07	20:24	05:48	Method Blank
T16395-4	F0078975.D	02/28/07	20:55	06:19	TRIP BLANK 021907
ZZZZZZ	F0078976.D	02/28/07	21:26	06:50	(unrelated sample)
T16395-1	F0078977.D	02/28/07	21:58	07:22	LHSMW-23-FEB2007
T16395-2	F0078978.D	02/28/07	22:30	07:54	46WW04-FEB2007
T16395-2MS	F0078979.D	02/28/07	23:00	08:24	Matrix Spike
T16395-2MSD	F0078980.D	02/28/07	23:32	08:56	Matrix Spike Duplicate
T16395-3	F0078981.D	03/01/07	00:03	09:27	46WW01-FEB2007
ZZZZZZ	F0078982.D	03/01/07	00:35	09:59	(unrelated sample)
ZZZZZZ	F0078983.D	03/01/07	01:06	10:30	(unrelated sample)
ZZZZZZ	F0078984.D	03/01/07	01:38	11:02	(unrelated sample)
ZZZZZZ	F0078989.D	03/01/07	04:15	13:39	(unrelated sample)
ZZZZZZ	F0078990.D	03/01/07	04:47	14:11	(unrelated sample)
ZZZZZZ	F0078991.D	03/01/07	05:19	14:43	(unrelated sample)
ZZZZZZ	F0078992.D	03/01/07	05:50	15:14	(unrelated sample)

Volatile Internal Standard Area Summary

Job Number: T16395
Account: ITTXHO Shaw E & I, Inc.
Project: Longhorn Army Ammunition Plant

Check Std:	VF2305-ICC2305	Injection Date:	02/28/07
Lab File ID:	F0078967.D	Injection Time:	16:44
Instrument ID:	GCMSF	Method:	SW846 8260B

	IS 1 AREA	RT	IS 2 AREA	RT	IS 3 AREA	RT
Check Std	813923	11.95	609604	16.02	248865	19.30
Upper Limit [a]	1627846	12.45	1219208	16.52	497730	19.80
Lower Limit [b]	406962	11.45	304802	15.52	124433	18.80

Lab Sample ID	IS 1 AREA	RT	IS 2 AREA	RT	IS 3 AREA	RT
VF2305-BS	933349	11.95	693096	16.03	262848	19.30
VF2305-MB	854827	11.95	606091	16.03	192974	19.31
T16395-4	838395	11.96	594327	16.03	175579	19.31
ZZZZZZ	800333	11.95	570162	16.03	179344	19.31
T16395-1	787212	11.95	565898	16.03	182794	19.30
T16395-2	744997	11.95	527050	16.03	160154	19.30
T16395-2MS	776605	11.96	577525	16.04	224433	19.31
T16395-2MSD	784273	11.95	577802	16.03	226133	19.30
T16395-3	804224	11.96	558124	16.03	150968	19.31
ZZZZZZ	737116	11.96	512441	16.04	137912	19.31
ZZZZZZ	744233	11.95	534298	16.03	142004	19.32
ZZZZZZ	741736	11.95	529029	16.04	136149	19.31
ZZZZZZ	712319	11.96	491313	16.04	123437*	19.31
ZZZZZZ	669573	11.96	465362	16.04	116108*	19.32
ZZZZZZ	694687	11.96	481226	16.03	122927*	19.31
ZZZZZZ	687951	11.95	478773	16.04	125041	19.31

IS 1 = Fluorobenzene
IS 2 = Chlorobenzene-D5
IS 3 = 1,4-Dichlorobenzene-d4

(a) Upper Limit = +100% of check standard area; Retention time +0.5 minutes.
(b) Lower Limit = -50% of check standard area; Retention time -0.5 minutes.

Volatile Surrogate Recovery Summary

Job Number: T16395
Account: ITTXHO Shaw E & I, Inc.
Project: Longhorn Army Ammunition Plant

Method: SW846 8260B Matrix: AQ

Samples and QC shown here apply to the above method

Lab Sample ID	Lab File ID	S1	S2	S3	S4
T16395-1	F0078977.D	100.0	96.0	104.0	107.0
T16395-2	F0078978.D	102.0	101.0	109.0	118.0
T16395-3	F0078981.D	99.0	94.0	108.0	121.0
T16395-4	F0078975.D	100.0	96.0	107.0	115.0
T16395-2MS	F0078979.D	99.0	98.0	103.0	100.0
T16395-2MSD	F0078980.D	104.0	97.0	107.0	100.0
VF2305-BS	F0078972.D	99.0	94.0	102.0	102.0
VF2305-MB	F0078974.D	100.0	93.0	106.0	113.0

Surrogate Compounds	Recovery Limits
S1 = Dibromofluoromethane	73-139%
S2 = 1,2-Dichloroethane-D4	66-139%
S3 = Toluene-D8	77-148%
S4 = 4-Bromofluorobenzene	84-150%

5.6

Initial Calibration Summary

Job Number: T16395
Account: ITTXHO Shaw E & I, Inc.
Project: Longhorn Army Ammunition Plant

Sample: VF2305-ICC2305
Lab FileID: F0078967.D

Response Factor Report GC/MS F

Method : C:\HPCHEM\1\METHODS\VF2305C.M (RTE Integrator)
Title : SW846 8260B and EPA 624
Last Update : Thu Mar 01 07:31:12 2007
Response via : Initial Calibration

Calibration Files
1 =F0078964.D 2 =F0078965.D 3 =F0078966.D
4 =F0078967.D 5 =F0078968.D 6 =F0078969.D 7 =F0078970.D

Compound	1	2	3	4	5	6	7	Avg	%RSD
1) I Fluorobenzene	----------ISTD----------								
2) Dichlorodifluorom	0.157	0.162	0.153	0.171	0.181	0.178	0.196	0.171	8.89
3)P Chloromethane	0.353	0.368	0.326	0.309	0.319	0.297	0.331	0.329	7.50
4)C Vinyl Chloride	0.279	0.316	0.268	0.280	0.287	0.269	0.300	0.286	6.01
5) Bromomethane	0.275	0.253	0.223	0.215	0.216	0.204	0.190	0.225	12.95
6) Chloroethane	0.203	0.232	0.219	0.222	0.222	0.210	0.211	0.217	4.37
7) Trichlorofluorome	0.137	0.154	0.142	0.159	0.166	0.162	0.164	0.155	7.23
8) Acrolein	0.030	0.030	0.031	0.036	0.036	0.033	0.033	0.033	8.00
9)C 1,1-Dichloroethen	0.287	0.299	0.298	0.320	0.322	0.306	0.312	0.306	4.04
10) Freon 113	0.174	0.190	0.191	0.225	0.225	0.213	0.216	0.205	9.65
11) Acetone	0.065	0.062	0.057	0.052	0.053	0.053	0.052	0.056	9.61
12) Iodomethane	0.405	0.432	0.438	0.436	0.447	0.434	0.445	0.434	3.22
13) Methyl acetate	0.199	0.203	0.197	0.179	0.188	0.186	0.185	0.191	4.56
14) Carbon Disulfide	0.833	0.878	0.869	0.908	0.930	0.885	0.918	0.889	3.74
15) Methylene Chlorid	0.410	0.424	0.407	0.404	0.396	0.378	0.376	0.399	4.34
16) Tert Butyl Alcoho	0.015	0.018	0.018	0.015	0.017	0.018	0.018	0.017	8.14
17) trans-1,2-Dichlor	0.328	0.340	0.340	0.344	0.351	0.337	0.344	0.341	2.11
18) Acrylonitrile	0.086	0.099	0.097	0.091	0.097	0.098	0.097	0.095	4.82
19) Methyl Tert Butyl	0.577	0.603	0.572	0.555	0.578	0.587	0.594	0.581	2.70
20) Hexane	0.300	0.281	0.283	0.341	0.346	0.320	0.315	0.312	8.32
21)P 1,1-Dichloroethan	0.428	0.457	0.436	0.445	0.450	0.430	0.435	0.440	2.44
22) Vinyl acetate	0.513	0.554	0.582	0.564	0.569	0.552	0.517	0.550	4.74
23) Di-isopropyl ethe	0.944	1.012	0.992	0.981	0.988	0.943	0.934	0.971	3.09
24) Ethyl tert-butyl	0.721	0.735	0.733	0.737	0.753	0.739	0.749	0.738	1.43
25) 2,2-Dichloropropa	0.208	0.200	0.197	0.210	0.209	0.202	0.195	0.203	2.91
26) cis-1,2-Dichloroe	0.282	0.305	0.302	0.308	0.307	0.302	0.307	0.302	3.03
27) 2-Butanone	0.113	0.118	0.120	0.105	0.111	0.112	0.109	0.113	4.48
28) Bromochloromethan	0.124	0.142	0.145	0.146	0.147	0.149	0.150	0.143	6.13
29)C Chloroform	0.343	0.363	0.358	0.362	0.364	0.353	0.362	0.358	2.09
30) Tetrahydrofuran	0.048	0.035	0.033	0.030	0.031	0.031	0.029	0.034	19.44
----- Linear regression ----- Coefficient = 0.9988									
Response Ratio = 0.00148 + 0.02898 *A									
31) 1,1,1-Trichloroet	0.196	0.201	0.204	0.213	0.218	0.210	0.215	0.208	3.79
32)S Dibromofluorometh	0.211	0.221	0.210	0.217	0.221	0.221	0.226	0.218	2.61
33) Cyclohexane	0.390	0.405	0.413	0.479	0.485	0.453	0.447	0.439	8.43
34) 1,1-Dichloroprope	0.283	0.279	0.292	0.313	0.321	0.312	0.316	0.302	5.61
35) Carbon Tetrachlor	0.142	0.161	0.164	0.176	0.181	0.177	0.183	0.169	8.57
36)S 1,2-Dichloroethan	0.159	0.173	0.166	0.161	0.165	0.162	0.166	0.165	2.76
37) Benzene	1.089	1.108	1.092	1.113	1.134	1.098	1.119	1.108	1.43
38) 1,2-Dichloroethan	0.181	0.193	0.200	0.205	0.200	0.204	0.201	0.198	4.13
39) tert-amyl methyl	0.712	0.774	0.759	0.736	0.767	0.769	0.782	0.757	3.26
40) Trichloroethene	0.212	0.223	0.218	0.229	0.233	0.229	0.236	0.226	3.78
41) Methylcyclohexane	0.318	0.332	0.335	0.391	0.401	0.384	0.388	0.364	9.38
42)C 1,2-Dichloropropa	0.320	0.304	0.310	0.316	0.320	0.310	0.318	0.314	1.90
43) Dibromomethane	0.129	0.147	0.169	0.160	0.166	0.165	0.170	0.158	9.61

Initial Calibration Summary

Job Number: T16395
Account: ITTXHO Shaw E & I, Inc.
Project: Longhorn Army Ammunition Plant

Sample: VF2305-ICC2305
Lab FileID: F0078967.D

44)	1,4-Dioxane	0.002	0.002	0.002	0.002	0.003	0.003	0.003	0.002	17.15

----- Linear regression ----- Coefficient = 0.9989
Response Ratio = -0.00341 + 0.00271 *A

45)	Bromodichlorometh	0.287	0.300	0.298	0.307	0.311	0.306	0.317	0.304	3.19
46)	2-Nitropropane	0.046	0.042	0.041	0.037	0.038	0.039	0.038	0.040	7.95
47)	2-Chloroethyl vin	0.094	0.104	0.122	0.125	0.136	0.143	0.152	0.125	16.72

----- Linear regression ----- Coefficient = 0.9983
Response Ratio = -0.06248 + 0.15260 *A

48)	4-Methyl-2-pentan	0.229	0.239	0.249	0.234	0.246	0.246	0.237	0.240	3.06
49)	cis-1,3-Dichlorop	0.369	0.397	0.420	0.427	0.443	0.439	0.454	0.421	6.95

50) I Chlorobenzene-d5 ----------ISTD----------

51)S	Toluene-d8	1.147	1.122	1.060	1.073	1.083	1.079	1.120	1.098	2.89
52)C	Toluene	1.382	1.408	1.358	1.387	1.384	1.367	1.417	1.386	1.51
53)	trans-1,3-Dichlor	0.340	0.364	0.391	0.402	0.406	0.409	0.428	0.391	7.65
54)	1,1,2-Trichloroet	0.263	0.295	0.289	0.279	0.283	0.284	0.289	0.283	3.62
55)	Tetrachloroethene	0.272	0.280	0.293	0.302	0.309	0.299	0.307	0.294	4.70
56)	2-hexanone	0.170	0.180	0.203	0.194	0.206	0.211	0.208	0.196	8.04
57)	1,3-Dichloropropa	0.605	0.605	0.602	0.593	0.592	0.591	0.602	0.599	1.05
58)	Dibromochlorometh	0.254	0.312	0.303	0.296	0.299	0.304	0.315	0.298	6.92
59)	1,2-Dibromoethane	0.283	0.310	0.305	0.302	0.314	0.320	0.331	0.309	4.87
60)	1-Chlorohexane	0.464	0.467	0.465	0.505	0.517	0.509	0.535	0.495	5.83
61)P	Chlorobenzene	0.877	0.857	0.851	0.870	0.877	0.867	0.897	0.871	1.73
62)	1,1,1,2-Tetrachlo	0.264	0.284	0.283	0.282	0.281	0.279	0.288	0.280	2.74
63)C	Ethylbenzene	1.475	1.458	1.433	1.493	1.499	1.470	1.518	1.478	1.90
64)	m,p-Xylene	0.970	0.990	1.008	1.040	1.057	1.039	1.067	1.025	3.51
65)	o-Xylene	1.021	1.033	1.058	1.084	1.107	1.077	1.111	1.070	3.23
66)	Styrene	0.796	0.855	0.910	0.960	0.983	0.978	1.013	0.928	8.44
67)P	Bromoform	0.142	0.077	0.184	0.179	0.195	0.199	0.205	0.169	26.85

----- Linear regression ----- Coefficient = 0.9995
Response Ratio = -0.01246 + 0.20679 *A

68) I 1,4-Dichlorobenzene-d ----------ISTD----------

69)	Isopropylbenzene	3.394	3.422	2.803	2.838	2.780	2.731	2.618	2.941	11.11
70)	Cyclohexanone	0.023	0.030	0.027	0.025	0.026	0.029	0.027	0.027	8.23
71)S	4-Bromofluorobenz	1.169	1.004	0.864	0.853	0.853	0.860	0.845	0.921	13.32
72)	Bromobenzene	0.997	0.963	0.842	0.837	0.823	0.822	0.788	0.867	9.15
73)P	1,1,2,2-Tetrachlo	1.339	1.320	1.146	1.011	1.011	1.030	0.983	1.120	13.59
74)	Trans-1,4-Dichlor	0.143	0.182	0.177	0.182	0.188	0.192	0.192	0.179	9.42
75)	1,2,3-Trichloropr	0.257	0.296	0.253	0.232	0.230	0.236	0.225	0.247	10.10
76)	n-Propylbenzene	4.567	4.426	4.010	4.105	4.023	3.954	3.865	4.136	6.29
77)	2-Chlorotoluene	3.164	2.888	2.531	2.500	2.416	2.351	2.285	2.591	12.31
78)	4-Chlorotoluene	2.569	2.376	2.183	2.187	2.133	2.116	2.076	2.234	7.90
79)	1,3,5-Trimethylbe	2.668	2.535	2.320	2.351	2.287	2.250	2.168	2.368	7.33
80)	sec-Butylbenzene	3.329	3.252	3.038	3.232	3.150	3.042	2.937	3.140	4.47
81)	1,3-Dichlorobenze	1.316	1.426	1.364	1.413	1.441	1.419	1.422	1.400	3.16
82)	4-Isopropyltoluen	2.408	2.304	2.224	2.403	2.346	2.277	2.220	2.312	3.37
83)	1,4-Dichlorobenze	1.528	1.430	1.389	1.429	1.420	1.423	1.424	1.435	3.04
84)	tert-Butylbenzene	0.533	0.438	0.430	0.445	0.436	0.429	0.410	0.446	8.90
85)	n-Butylbenzene	1.465	1.572	1.892	2.173	2.149	2.132	2.214	1.942	15.91

----- Linear regression ----- Coefficient = 0.9997
Response Ratio = -0.08322 + 2.22219 *A

86)	1,2-Dichlorobenze	1.206	1.332	1.314	1.336	1.345	1.359	1.369	1.323	4.14
87)	1,2,4-Trimethylbe	2.566	2.449	2.311	2.410	2.354	2.310	2.242	2.377	4.53
88)	1,2-Dibromo-3-Chl	0.068	0.106	0.082	0.072	0.077	0.089	0.088	0.083	15.22

----- Linear regression ----- Coefficient = 0.9968

5.7 5

Initial Calibration Summary

Job Number: T16395
Account: ITTXHO Shaw E & I, Inc.
Project: Longhorn Army Ammunition Plant

Sample: VF2305-ICC2305
Lab FileID: F0078967.D

```
                Response Ratio = -0.00467 + 0.08863 *A

89)  1,2,4-Trichlorobe 0.166 0.135 0.302 0.403 0.468 0.530 0.585 0.370  47.33
            ----- Linear regression -----  Coefficient =  0.9944
                Response Ratio = -0.09820 + 0.59565 *A

90)  Hexachlorobutadie 0.058 0.088 0.170 0.207 0.204 0.208 0.202 0.162  38.83
            ----- Linear regression -----  Coefficient =  0.9993
                Response Ratio = -0.00579 + 0.20548 *A

91)  Naphthalene       0.526 0.280 0.475 0.606 0.781 0.975 1.125 0.681  43.48
          ----- Quadratic regression -----  Coefficient =  0.9974
                Response Ratio = -0.07686 + 0.74236 *A + 0.10172 *A^2

92)  1,2,3-Trichlorobe 0.167 0.113 0.217 0.276 0.334 0.389 0.421 0.274  41.95
            ----- Linear regression -----  Coefficient =  0.9938
                Response Ratio = -0.07169 + 0.43007 *A

--------------------------------------------------------------------------------
(#) = Out of Range

          VF2305C.M          Thu Mar 01 07:44:03 2007
```

5.7 5

General Chemistry

QC Data Summaries

Includes the following where applicable:

- Method Blank and Blank Spike Summaries
- Duplicate Summaries
- Matrix Spike Summaries
- Instrument Runlogs/QC

METHOD BLANK AND SPIKE RESULTS SUMMARY
GENERAL CHEMISTRY

Login Number: T16395
Account: ITTXHO - Shaw E & I, Inc.
Project: Longhorn Army Ammunition Plant

Analyte	Batch ID	RL	MB Result	Units	Spike Amount	BSP Result	BSP %Recov	QC Limits
Alkalinity, Total as CaCO3	GN11336	5.0	<5.0	mg/l	xxxxxxxx	2500	100.0	80-120%
Chloride	GN11305	1.0	<1.0	mg/l	xxxxxxxx	1000	100.0	92-107%
Nitrogen, Nitrate + Nitrite	GN11301	0.050	<0.050	mg/l	0.500	0.51	102.0	89-112%
Nitrogen, Nitrite	GN11275	0.050	<0.050	mg/l	0.500	0.50	100.0	89-117%
Specific Conductivity	GN11341	1.0	<1.0	umhos/cm				
Sulfate	GN11356			mg/l	100	95.0	95.0	80-120%
Sulfate	GN11356	10	<10	mg/l	xxxxxxxx		*	80-120%
Sulfide	GN11286	0.20	<0.20	mg/l	1600	1370	86.0	80-120%
Total Organic Carbon	GN11296	1.0	<1.0	mg/l	25.0	25.0	100.0	83-110%

Associated Samples:
Batch GN11275: T16395-1, T16395-2, T16395-3
Batch GN11286: T16395-1, T16395-2, T16395-3
Batch GN11296: T16395-1, T16395-2, T16395-3
Batch GN11301: T16395-1, T16395-2, T16395-3
Batch GN11305: T16395-1, T16395-2, T16395-3
Batch GN11336: T16395-1, T16395-2, T16395-3
Batch GN11341: T16395-3
Batch GN11356: T16395-1, T16395-2, T16395-3
(*) Outside of QC limits

6.1 B

DUPLICATE RESULTS SUMMARY
GENERAL CHEMISTRY

Login Number: T16395
Account: ITTXHO - Shaw E & I, Inc.
Project: Longhorn Army Ammunition Plant

Analyte	Batch ID	QC Sample	Units	Original Result	DUP Result	RPD	QC Limits
Alkalinity, Total as CaCO3	GN11336	T16411-10	mg/l	158	165	4.3	0-10%
Chloride	GN11305	T16041-1	mg/l	48.0	47.7	1.0	0-5%
Nitrogen, Nitrate + Nitrite	GN11301	T16445-18	mg/l	2.7	2.7	0.0	0-10%
Nitrogen, Nitrite	GN11275	T16395-1	mg/l	0.020 B	<0.050	0.0	0-10%
Sulfate	GN11356	T16411-10	mg/l	1260	1200	4.7	0-20%
Sulfide	GN11286	T16411-10	mg/l	U	<0.20	0.0	0-20%
Total Organic Carbon	GN11296	T16411-10	mg/l	18.0	18.0	0.0	0-11%
pH	GN11276	T16395-3	su	5.9	5.9	0.0	0-6.8%

Associated Samples:
Batch GN11275: T16395-1, T16395-2, T16395-3
Batch GN11276: T16395-1, T16395-2, T16395-3
Batch GN11286: T16395-1, T16395-2, T16395-3
Batch GN11296: T16395-1, T16395-2, T16395-3
Batch GN11301: T16395-1, T16395-2, T16395-3
Batch GN11305: T16395-1, T16395-2, T16395-3
Batch GN11336: T16395-1, T16395-2, T16395-3
Batch GN11341: T16395-3
Batch GN11356: T16395-1, T16395-2, T16395-3
(*) Outside of QC limits

6.2
6

MATRIX SPIKE RESULTS SUMMARY
GENERAL CHEMISTRY

Login Number: T16395
Account: ITTXHO - Shaw E & I, Inc.
Project: Longhorn Army Ammunition Plant

Analyte	Batch ID	QC Sample	Units	Original Result	Spike Amount	MS Result	%Rec	QC Limits
Alkalinity, Total as CaCO3	GN11336	T16411-10	mg/l	158	xxxxxxxx	215	116.0	79-122%
Chloride	GN11305	T16041-1	mg/l	48.0	xxxxxxxx	69.0	105.0	81-119%
Nitrogen, Nitrate + Nitrite	GN11301	T16445-18	mg/l	2.7	1.00	3.7	100.0	80-119%
Nitrogen, Nitrite	GN11275	T16395-1	mg/l	0.020 B	0.100	0.11	114.0	75-134%
Sulfate	GN11356	T16411-10	mg/l	1260	250	1470	87.0	75-125%
Sulfate	GN11356	T16411-10	mg/l	1260	xxxxxxxx		*	75-125%
Total Organic Carbon	GN11296	T16411-10	mg/l	18.0	10.0	28.0	100.0	74-121%
Total Organic Carbon	GN11296	T16411-10	mg/l	18.0	10.0	27.0	90.0	74-121%

Associated Samples:
Batch GN11275: T16395-1, T16395-2, T16395-3
Batch GN11296: T16395-1, T16395-2, T16395-3
Batch GN11301: T16395-1, T16395-2, T16395-3
Batch GN11305: T16395-1, T16395-2, T16395-3
Batch GN11336: T16395-1, T16395-2, T16395-3
Batch GN11356: T16395-1, T16395-2, T16395-3
(*) Outside of QC limits
(N) Matrix Spike Rec. outside of QC limits

6.3 6

MATRIX SPIKE DUPLICATE RESULTS SUMMARY
GENERAL CHEMISTRY

Login Number: T16395
Account: ITTXHO - Shaw E & I, Inc.
Project: Longhorn Army Ammunition Plant

Analyte	Batch ID	QC Sample	Units	Original Result	Spike Amount	MSD Result	RPD	QC Limit

Associated Samples:
Batch GN11336: T16395-1, T16395-2, T16395-3
(*) Outside of QC limits

Misc. Forms

7

Custody Documents and Other Forms

(Accutest Laboratories Southeast, Inc.)

Includes the following where applicable:

- Chain of Custody

T16395 [redacted]

CHAIN OF CUSTODY

2/21/2

ACCUTEST Laboratories

10165 Harwin, Suite 150 - Houston, TX 77036 - 713-271-4700 fax: 713-271-4770

Page 1 of 1

FED-EX Tracking #	Bottle Order Control #
Accutest Quote #	Accutest Job # T16395

Subcontract Information

Company Name: ALSE-ORLANDO
Project Contact:
Address:
City: ORLANDO State: Zip:
Phone No.: Fax No.:

Project Information

Send Report to: Agnesv@accutest.com
Bill to: Accutest Laboratories
Address: 10165 Harwin Drive, Suite 150
City: Houston, TX 77036 State: Zip:
Phone No.: 713-271-4700 / 713-271-4770 Fax No.:
Accutest Purchase Order #:

Requested Analyses

Matrix Codes: DW - Drinking Water; GW - Ground Water; WW - Wastewater; SO - Soil; SL - Sludge; OI - Oil; LIQ - Other Liquid; SOL - Other Solid

Accutest Sample ID	Collection Date	Collection Time	Matrix	# of bottles	HCl	NaHSO4	HNO3	H2SO4	NaOH/ZnOAc	NaHSO4	MEOH	NONE	Methane, Ethane, Ethene (RSK147)	Perchlorates	LAB USE ONLY
T16395-1	2/19/2007	0	GW	3	2							x	X	X	
T16395-2	2/19/2007	1405	GW	3	2							x	X	X	
T16395-3	2/19/2007	1456	GW	3	2							x	X	X	

Turnaround Time (Business days)

- [XX] 10 Day STANDARD
- [ ] 6 Day RUSH
- [ ] 4 Day RUSH
- [ ] 3 Day EMERGENCY
- [ ] 2 Day EMERGENCY
- [ ] 1 Day EMERGENCY
- [ ] Other

Approved By/ Date:

Data Deliverable Information

- [ ] Commercial "A"
- [ ] Commercial "B"
- [XX] TRRP 13
- [XX] Reduced Tier1
- [ ] State Forms
- [ ] EDD Format
- [ ] Other

Commercial "A" = Results Only
Commercial "B" = Results & Standard QC

Comments / Remarks

SAMPLE CUSTODY MUST BE DOCUMENTED BELOW EACH TIME SAMPLES CHANGE POSSESSION, INCLUDING COURIER DELIVERY

Relinquished by Sampler:	Date Time:	Received By:	Relinquished By:	Date Time:	Received By:
1		1	2		2
Relinquished by: 3	Date Time:	Received By: 3	Relinquished By: 4 [illegible]	Date Time: 2/20/07 17:00	Received By: 4 FX
Relinquished by: 5 FX	Date Time: 09:30 02-23-07	Received By: 5 [illegible]	Custody Seal #	Preserved where applicable ☐	On Ice ☐ Cooler Temp. 1.6

7.1 7

T16395: Chain of Custody
Page 1 of 2
Accutest Laboratories Southeast, Inc.

ACCUTEST LABORATORIES SAMPLE RECEIPT CONFIRMATION

ACCUTEST'S JOB NUMBER: T 16395 CLIENT: ALGC PROJECT: T16395

DATE/TIME RECEIVED: 02-03-07 09:00 # OF COOLERS RECEIVED: 1 COOLER TEMPS: 1.6

METHOD OF DELIVERY: FEDEX UPS ACCUTEST COURIER GREYHOUND DELIVERY OTHER

AIRBILL NUMBERS: 7986 1382 4379

COOLER INFORMATION

- [ ] CUSTODY SEAL NOT PRESENT OR NOT INTACT
- [ ] CHAIN OF CUSTODY NOT RECEIVED (COC)
- [ ] ANALYSIS REQUESTED IS UNCLEAR OR MISSING
- [ ] SAMPLE DATES OR TIMES UNCLEAR OR MISSING
- [ ] TEMPERATURE CRITERIA NOT MET

TRIP BLANK INFORMATION

- [ ] TRIP BLANK PROVIDED
- [x] TRIP BLANK NOT PROVIDED
- [x] TRIP BLANK NOT ON COC
- [ ] TRIP BLANK INTACT
- [ ] TRIP BLANK NOT INTACT
- [ ] RECEIVED WATER TRIP BLANK
- [ ] RECEIVED SOIL TRIP BLANK

MISC. INFORMATION

NUMBER OF ENCORES ? 8

NUMBER OF 5035 FIELD KITS ? 8

NUMBER OR LAB FILTERED METALS ? 8

SAMPLE INFORMATION

- [ ] SAMPLE LABELS NOT PRESENT ON ALL BOTTLES
- [ ] CORRECT NUMBER OF CONTAINERS USED
- [ ] SAMPLE RECEIVED IMPROPERLY PRESERVED
- [ ] INSUFFICIENT VOLUME FOR ANALYSIS
- [ ] TIMES ON COC DOES NOT MATCH LABEL(S)
- [ ] ID'S ON COC DOES NOT MATCH LABEL(S)
- [ ] VOC VIALS HAVE HEADSPACE (MACRO BUBBLES)
- [ ] BOTTLES RECEIVED BUT ANALYSIS NOT REQUESTED
- [ ] NO BOTTLES RECEIVED FOR ANALYSIS REQUESTED
- [ ] UNCLEAR FILTERING INSTRUCTIONS
- [ ] UNCLEAR COMPOSITING INSTRUCTIONS
- [ ] SAMPLE CONTAINER(S) RECEIVED BROKEN
- [ ] % SOLIDS JAR NOT RECEIVED
- [ ] 5035 FIELD KIT NOT FROZEN WITHIN 48 HOUR'S
- [ ] RESIDUAL CHLORINE PRESENT

(APPLICABLE TO EPA 600 SERIES OR NORTH CAROLINA ORGANICS)

SUMMARY OF COMMENTS:

TECHNICIAN SIGNATURE/DATE [signature] 02-03-07 TECHNICIAN SIGNATURE/DATE

ASBD 10/03/06

7.1 7

T16395: Chain of Custody
Page 2 of 2

ACCUTEST Laboratories T16395

GC Volatiles

QC Data Summaries

(Accutest Laboratories Southeast, Inc.)

Includes the following where applicable:

- Method Blank Summaries
- Blank Spike Summaries
- Matrix Spike and Duplicate Summaries
- Surrogate Recovery Summaries
- GC Surrogate Retention Time Summaries
- Initial and Continuing Calibration Summaries

Method Blank Summary

Job Number: T16395
Account: ALGC Accutest Laboratories Gulf Coast, Inc.
Project: ITTXHO: Longhorn Army Ammunition Plant

Sample	File ID	DF	Analyzed	By	Prep Date	Prep Batch	Analytical Batch
GXY991-MB	XY025230.D	1	02/26/07	TD	n/a	n/a	GXY991

The QC reported here applies to the following samples: Method: RSKSOP-147/175

T16395-1, T16395-2, T16395-3

CAS No.	Compound	Result	RL	MDL	Units	Q
74-82-8	Methane	ND	0.50	0.30	ug/l	
74-84-0	Ethane	ND	1.0	0.60	ug/l	
74-85-1	Ethene	ND	1.0	0.80	ug/l	

8.1 8

Blank Spike Summary

Job Number: T16395
Account: ALGC Accutest Laboratories Gulf Coast, Inc.
Project: ITTXHO: Longhorn Army Ammunition Plant

Sample	File ID	DF	Analyzed	By	Prep Date	Prep Batch	Analytical Batch
GXY991-BS	XY025231.D	1	02/26/07	TD	n/a	n/a	GXY991

The QC reported here applies to the following samples: Method: RSKSOP-147/175

T16395-1, T16395-2, T16395-3

CAS No.	Compound	Spike ug/l	BSP ug/l	BSP %	Limits
74-82-8	Methane	108	99.2	92	54-149
74-84-0	Ethane	219	217	99	57-143
74-85-1	Ethene	290	276	95	57-143

8.2 8

Matrix Spike Summary

Job Number: T16395
Account: ALGC Accutest Laboratories Gulf Coast, Inc.
Project: ITTXHO: Longhorn Army Ammunition Plant

Sample	File ID	DF	Analyzed	By	Prep Date	Prep Batch	Analytical Batch
T16411-10MS	XY025248.D	1	02/26/07	TD	n/a	n/a	GXY991
T16411-10	XY025246.D	1	02/26/07	TD	n/a	n/a	GXY991

The QC reported here applies to the following samples: Method: RSKSOP-147/175

T16395-1, T16395-2, T16395-3

CAS No.	Compound	T16411-10 ug/l	Q	Spike ug/l	MS ug/l	MS %	Limits
74-82-8	Methane	0.50	U	108	103	95	54-149
74-84-0	Ethane	1.0	U	219	226	103	57-143
74-85-1	Ethene	1.0	U	290	290	100	57-143

8.3

Duplicate Summary

Job Number: T16395
Account: ALGC Accutest Laboratories Gulf Coast, Inc.
Project: ITTXHO: Longhorn Army Ammunition Plant

Sample	File ID	DF	Analyzed	By	Prep Date	Prep Batch	Analytical Batch
T16411-10DUP	XY025247.D	1	02/26/07	TD	n/a	n/a	GXY991
T16411-10	XY025246.D	1	02/26/07	TD	n/a	n/a	GXY991

The QC reported here applies to the following samples: Method: RSKSOP-147/175

T16395-1, T16395-2, T16395-3

CAS No.	Compound	T16411-10 ug/l	Q	DUP ug/l	Q	RPD	Limits
74-82-8	Methane	0.50 U		ND		nc	24
74-84-0	Ethane	1.0 U		ND		nc	23
74-85-1	Ethene	1.0 U		ND		nc	10

8.4 8

Initial Calibration Summary

Job Number: T16395
Account: ALGC Accutest Laboratories Gulf Coast, Inc.
Project: ITTXHO: Longhorn Army Ammunition Plant

Sample: GXY989-ICC989
Lab FileID: XY025202.D

Response Factor Report VOA5

Method : C:\HPCHEM\2\METHODS\RSK147XY.M (Chemstation Integrator)
Title : Dissolved Gases in Water
Last Update : Thu Feb 22 15:36:18 2007
Response via : Initial Calibration

Calibration Files
1 =XY025194.D 2 =XY025195.D 3 =XY025201.D 4 =XY025197.D
5 =XY025202.D 6 =XY025199.D 7 =XY025200.D

Compound	1	2	3	4	5	6	7	Avg	%RSD
1)c Methane	1.442	0.904	1.128	1.220	0.672	0.793	0.957	1.017 E4	26.02
2)c Ethylene	2.415	1.896	1.964	2.128	1.306	1.522	1.817	1.864 E4	19.76
3)c Ethane	2.311	1.873	1.880	2.068	1.280	1.499	1.798	1.816 E4	18.87

(#) = Out of Range

RSK147XY.M Thu Feb 22 15:38:10 2007

8.5 8

Initial Calibration Verification

Job Number: T16395
Account: ALGC Accutest Laboratories Gulf Coast, Inc.
Project: ITTXHO: Longhorn Army Ammunition Plant

Sample: GXY989-ICV989
Lab FileID: XY025203.D

Evaluate Continuing Calibration Report

Data File : C:\HPCHEM\2\DATA\022207\XY025203.D
Acq On : 22 Feb 2007 1:27 pm
Sample : ICV989-1000
Misc : gc7062,gxy989,,,,,
IntFile : EVENTS.E

Vial: 100
Operator: Trangd
Inst : VOA5
Multiplr: 1.00

Method : C:\HPCHEM\2\METHODS\RSK147XY.M (Chemstation Integrator)
Title : Dissolved Gases in Water
Last Update : Thu Feb 22 15:36:18 2007
Response via : Multiple Level Calibration

Min. RRF : 0.000 Min. Rel. Area : 50% Max. R.T. Dev 0.50min
Max. RRF Dev : 30% Max. Rel. Area : 150%

	Compound	Amount	Calc.	%Drift	Area%	Dev(min)	RT Window
1 c	Methane	1000.000	1154.410	-15.4	175	0.20	0.88- 1.48
2 c	Ethylene	1000.000	1202.152	-20.2	172	0.31	2.54- 3.34
3 c	Ethane	1000.000	1245.774	-24.6	177	0.32	3.14- 3.94

(#) = Out of Range SPCC's out = 0 CCC's out = 0
XY025202.D RSK147XY.M Thu Feb 22 15:37:53 2007

8.5 8

Continuing Calibration Summary

Job Number: T16395
Account: ALGC Accutest Laboratories Gulf Coast, Inc.
Project: ITTXHO: Longhorn Army Ammunition Plant

Sample: GXY991-CC989
Lab FileID: XY025228.D

Evaluate Continuing Calibration Report

Data File : C:\HPCHEM\2\DATA\022607\XY025228.D
Acq On : 26 Feb 2007 9:27 am
Sample : CC989-1000
Misc : gc7062,gxy991,,,,,
IntFile : EVENTS.E

Vial: 100
Operator: Trangd
Inst : VOA5
Multiplr: 1.00

Method : C:\HPCHEM\2\METHODS\RSK147XY.M (Chemstation Integrator)
Title : Dissolved Gases in Water
Last Update : Tue Feb 27 13:37:21 2007
Response via : Multiple Level Calibration

Min. RRF : 0.000 Min. Rel. Area : 50% Max. R.T. Dev 0.50min
Max. RRF Dev : 30% Max. Rel. Area : 150%

	Compound	Amount	Calc.	%Drift	Area%	Dev(min)	RT Window
1 c	Methane	1000.000	935.186	6.5	141	0.07	1.13- 1.73
2 c	Ethylene	1000.000	1013.727	-1.4	145	0.09	2.94- 3.74
3 c	Ethane	1000.000	1028.150	-2.8	146	0.09	3.57- 4.37

(#) = Out of Range SPCC's out = 0 CCC's out = 0
XY025202.D RSK147XY.M Tue Feb 27 14:33:55 2007

8.5 8

Continuing Calibration Summary

Job Number: T16395
Account: ALGC Accutest Laboratories Gulf Coast, Inc.
Project: ITTXHO: Longhorn Army Ammunition Plant

Sample: GXY991-CC989
Lab FileID: XY025239.D

Evaluate Continuing Calibration Report

Data File : C:\HPCHEM\2\DATA\022607\XY025239.D
Acq On : 26 Feb 2007 12:29 pm
Sample : CC989-500
Misc : gc7062,gxy991,,,,,
IntFile : EVENTS.E

Vial: 100
Operator: Trangd
Inst : VOA5
Multiplr: 1.00

Method : C:\HPCHEM\2\METHODS\RSK147XY.M (Chemstation Integrator)
Title : Dissolved Gases in Water
Last Update : Tue Feb 27 13:37:21 2007
Response via : Multiple Level Calibration

Min. RRF : 0.000 Min. Rel. Area : 50% Max. R.T. Dev 0.50min
Max. RRF Dev : 30% Max. Rel. Area : 150%

	Compound	Amount	Calc.	%Drift	Area%	Dev(min)	RT Window
1 c	Methane	500.000	499.976	0.0	83	-0.02	1.13- 1.73
2 c	Ethylene	500.000	546.961	-9.4	96	0.00	2.94- 3.74
3 c	Ethane	500.000	553.481	-10.7	97	0.00	3.57- 4.37

(#) = Out of Range SPCC's out = 0 CCC's out = 0
XY025197.D RSK147XY.M Tue Feb 27 14:33:29 2007

8.5 8

Continuing Calibration Summary

Job Number: T16395
Account: ALGC Accutest Laboratories Gulf Coast, Inc.
Project: ITTXHO: Longhorn Army Ammunition Plant

Sample: GXY991-ECC989
Lab FileID: XY025249.D

Evaluate Continuing Calibration Report

Data File : C:\HPCHEM\2\DATA\022607\XY025249.D
Acq On : 26 Feb 2007 3:23 pm
Sample : ECC989-1000
Misc : gc7062,gxy991,,,,,
IntFile : EVENTS.E

Vial: 100
Operator: Trangd
Inst : VOA5
Multiplr: 1.00

Method : C:\HPCHEM\2\METHODS\RSK147XY.M (Chemstation Integrator)
Title : Dissolved Gases in Water
Last Update : Tue Feb 27 13:37:21 2007
Response via : Multiple Level Calibration

Min. RRF : 0.000 Min. Rel. Area : 50% Max. R.T. Dev 0.50min
Max. RRF Dev : 30% Max. Rel. Area : 150%

	Compound	Amount	Calc.	%Drift	Area%	Dev(min)	RT Window
1 c	Methane	1000.000	1134.333	-13.4	172	0.01	1.13- 1.73
2 c	Ethylene	1000.000	1229.780	-23.0	175	0.00	2.94- 3.74
3 c	Ethane	1000.000	1245.098	-24.5	177	0.00	3.57- 4.37

(#) = Out of Range SPCC's out = 0 CCC's out = 0
XY025202.D RSK147XY.M Tue Feb 27 14:33:55 2007

8.5 8

General Chemistry

QC Data Summaries

(Accutest Laboratories Southeast, Inc.)

Includes the following where applicable:

- Method Blank and Blank Spike Summaries
- Duplicate Summaries
- Matrix Spike Summaries
- Instrument Runlogs/QC

METHOD BLANK AND SPIKE RESULTS SUMMARY
GENERAL CHEMISTRY

Login Number: T16395
Account: ALGC - Accutest Laboratories Gulf Coast, Inc.
Project: ITTXHO: Longhorn Army Ammunition Plant

Analyte	Batch ID	RL	MB Result	Units	Spike Amount	BSP Result	BSP %Recov	QC Limits
Perchlorate	GP9043/GN24390	10	<10	ug/l	50	48.0	96.0	85-115%

Associated Samples:
Batch GP9043: T16395-1, T16395-2, T16395-3
(*) Outside of QC limits

9.1 6

DUPLICATE RESULTS SUMMARY
GENERAL CHEMISTRY

Login Number: T16395
Account: ALGC - Accutest Laboratories Gulf Coast, Inc.
Project: ITTXHO: Longhorn Army Ammunition Plant

Analyte	Batch ID	QC Sample	Units	Original Result	DUP Result	RPD	QC Limits
Perchlorate	GP9043/GN24390	T16411-10	ug/l	4.0 U	<10	0.0	0-15%

Associated Samples:
Batch GP9043: T16395-1, T16395-2, T16395-3
(*) Outside of QC limits

9.2 9

MATRIX SPIKE RESULTS SUMMARY
GENERAL CHEMISTRY

Login Number: T16395
Account: ALGC - Accutest Laboratories Gulf Coast, Inc.
Project: ITTXHO: Longhorn Army Ammunition Plant

Analyte	Batch ID	QC Sample	Units	Original Result	Spike Amount	MS Result	%Rec	QC Limits
Perchlorate	GP9043/GN24390	T16411-10	ug/l	4.0 U	50	48.4	96.8	80-120%

Associated Samples:
Batch GP9043: T16395-1, T16395-2, T16395-3
(*) Outside of QC limits
(N) Matrix Spike Rec. outside of QC limits

Accutest Laboratories Instrument Runlog
Inorganics Analyses

Login Number: T16395
Account: ALGC - Accutest Laboratories Gulf Coast, Inc.
Project: ITTXHO: Longhorn Army Ammunition Plant

File ID: 207030101.TXT Date Analyzed: 03/01/07 Methods: EPA 314
Analyst: MP Run ID: GN24390
Parameters: Perchlorate

Time	Sample Description	Dilution Factor	PS Recov	Comments
13:57	GN24390-CCV1	1		
14:11	GN24390-CCB1	1		
14:25	GP9043-MB1	1		
14:40	GP9043-B1	1		
14:54	GN24390-CRI1	1		
15:09	GN24390-IPC1	1		
15:23	T16395-1	1		
15:37	T16395-2	1		
15:52	T16395-3	1		
16:06	T16411-1	1		(sample used for QC only; not part of login T16395)
16:21	ZZZZZZ	1		
16:35	ZZZZZZ	1		
16:50	GN24390-CCV2	1		
17:04	GN24390-CCB2	1		
17:18	ZZZZZZ	1		
17:33	ZZZZZZ	1		
17:47	ZZZZZZ	1		
18:02	ZZZZZZ	1		
18:16	ZZZZZZ	1		
18:30	ZZZZZZ	1		
18:45	T16411-10	1		(sample used for QC only; not part of login T16395)
18:59	ZZZZZZ	1		
19:14	ZZZZZZ	1		
19:28	ZZZZZZ	1		
19:42	GN24390-CCV3	1		
19:57	GN24390-CCB3	1		
20:11	ZZZZZZ	1		
20:26	ZZZZZZ	1		
20:40	ZZZZZZ	1		
20:54	GP9043-D1	1		
21:09	GP9043-S1	1		
21:23	GP9043-D2	1		
21:38	GP9043-S2	1		

Accutest Laboratories Instrument Runlog
Inorganics Analyses

Login Number: T16395
Account: ALGC - Accutest Laboratories Gulf Coast, Inc.
Project: ITTXHO: Longhorn Army Ammunition Plant

File ID: 207030101.TXT Date Analyzed: 03/01/07 Methods: EPA 314
Analyst: MP Run ID: GN24390
Parameters: Perchlorate

Time	Sample Description	Dilution Factor	PS Recov	Comments
21:52	GN24390-CCV4	1		
22:06	GN24390-CCB4	1		

Refer to raw data for calibration curve and standards.

9.4 6

Instrument QC Summary
Inorganics Analyses

Login Number: T16395
Account: ALGC - Accutest Laboratories Gulf Coast, Inc.
Project: ITTXHO: Longhorn Army Ammunition Plant

File ID: 207030101.TXT Date Analyzed: 03/01/07 Methods: EPA 314
Run ID: GN24390 Units: ug/l

Sample Number	Parameter	Result	RL	IDL/MDL	True Value	% Recov.	QC Limits
GN24390-CCV1	Perchlorate	48.0	10	4.0	50	96.0	85-115
GN24390-CCB1	Perchlorate	4.0 U	10	4.0			
GN24390-CRI1	Perchlorate	4.0 U	10	4.0	3	100.0	75-125
GN24390-IPC1	Perchlorate	22.0	10	4.0	25	88.0	80-120
GN24390-CCV2	Perchlorate	51.3	10	4.0	50	103.0	85-115
GN24390-CCB2	Perchlorate	4.0 U	10	4.0			
GN24390-CCV3	Perchlorate	53.1	10	4.0	50	106.0	85-115
GN24390-CCB3	Perchlorate	4.0 U	10	4.0			
GN24390-CCV4	Perchlorate	51.6	10	4.0	50	103.0	85-115
GN24390-CCB4	Perchlorate	4.0 U	10	4.0			

(!) Outside of QC limits

9.4 6

ACCUTEST.
10165 Harwin Drive
Suite 150
Houston, TX 77084

April 6, 2007

Diane Meyer
ABB Lummus Bldg.
3010 Briarpark Dr.
Houston, Tx 77042

Reference: Sample Results for Group Logins T16395, T16411, T16432, T16445, & T16448

Dear Ms. Meyer:

Thank you for bringing to our attention your concerns about the conductivity, sulfate, and chloride results you received for the Longhorn Army Ammunition Plant. Accutest Laboratories prides itself in providing the highest data quality; therefore your concerns were immediately investigated to determine the extent of any anomalies.

It was concluded that our conductivity results were initially reported without the conversion from mhos to umhos. Samples T16395-3 and T16445-3 were the exception. The result for T16445-3 was reported incorrectly, while T16395-3 was a subcontractor result which should have been 1000 times less.

The Sample T16411-8 result maybe the effect of an interferon. A smaller sample was utilized to remove inference resulting in a 1000X Reporting Limit (RL). At several dilutions, the sample was observed and found not achieving a white precipitate ($BaSO_4$) that is synonymous with this analysis.

Samples T16411-2 & 3 were reanalyzed for sulfate outside of the method hold time to confirm which result was most appropriate. The reanalyzed Sample 2 and 3 sulfate results were 89 mg/l and 88 mg/l, respectively. The above values support the result of Sample 3 from the original run.

Samples T16445-10 & 11 were reanalyzed for chloride outside the method hold time to confirm which result was most appropriate. The reanalyzes Sample 10 & 11 both yield a chloride result of 77 mg/l. The above values support the result of the Sample 10 from the original run.

In the latter two cases, it appears that a transcription error was the cause of the inaccuracies. The analyst was asked to utilize greater watchfulness when recording results onto bench sheets.

Accutest deeply apologizes for any inconvenience this situation may have caused. We do appreciate your business and look forward to exceeding your expectations for your future analytical needs. Should you require additional information about this issue, please contact the Laboratory Director Ron Martino or myself via telephone at 713-271-4700 or E-mail (Ronm@Accutest.com or Tamaraw@accutest.com).

Respectfully yours,

Tamara S. Welch
Quality Assurance Officer

SHAW ENVIRONMENTAL, INC.
ANALYTICAL DATA EVALUATION

The Project Chemist reviewed the attached Data Package. Detailed comments concerning specific analyses (i.e. GC/MS Semivolatiles) are provided in the attached review sheets. Any additional comments concerning the data package as a whole are listed below

Site/Location: Longhorn
Project No.: 114891
Laboratory: Accutest
Report No.: T16395

COMMENTS:
MNA sampling

DATA COMPLETENESS			
REQUIREMENTS: Cooler receipt	**Y**	**N**	**NA**
Cooler receipt form present?	✓		
Documentation of broken bottles, bubbles in VOA vials, missing labels, seals, etc.?	✓		
Was the cooler temperature upon receipt at the laboratory between 2° and 6° C?	✓		
Was the pH of the sample acceptable?	✓		
Original chain of custody/analytical request form present and complete?	✓		
Comparison of the reported parameters to the request on the chain of custody?	✓		
Each sample number transcribed by the laboratory and correct sample date?	✓		
Cross reference of field sample number, laboratory number and analytical batch?	✓		
Date of preparation / extraction and analysis for each sample?	✓		
Detection / Quantitation limits reported as specified?	✓		
Results reported for method blanks?	✓		
Results reported for trip blanks (VOCs only)?	✓		
Matrix Spike (MS) /Matrix Spike Duplicates (MSD) % recoveries and RPDs reported?	✓		
Laboratory Control Samples (LCS) / LCSD % recoveries and RPDs reported?	✓		
Surrogate values provided (organic samples only)?	✓		

Data Reviewed by: Diane Meyer Date: 3/26/07
Diane Meyer, Project Chemist

ANALYSIS: VOLATILE MATRIX: LIQUID ✓
EPA METHOD: _8260B_____ SOIL/SOLID_____ TCLP_____
BY GC/MS: LIQUID_____ Hold times met?_____

REQUIREMENTS		Y	N	NA
Method Blank	Every Batch or 20 Samples	✓		
	All Compounds < MDL	✓		
Trip Blank or Equipment Samples	Any contaminants detected?		✓	
Matrix Spike % Recovery Value	Within those set by Lab	✓		
Matrix Spike Dup % Recovery Value	Within those set by Lab	✓		
MS / MSD RPD	< Lab QC Limits	✓		
% LCS Recovery Value	Within those set by Lab	✓		
% LCSD Recovery Value	Within those set by Lab			✓
LCS /LCSD RPD	< Lab QC Limits			✓
% Surrogate Recovery Limits	Within those set by Lab	✓		
Field Duplicate Evaluation	RPD <35% or difference < 2 SQL for water			✓
	RPD <50% of difference < 3.5 SQL for soil			✓

If "NO," list all samples below:

Blank Information

Blank Type	Blank ID	Prep Batch	Date	Contaminant Found	Concentration (Specify Units)	Associated Samples

Matrix Spike / Matrix Spike Duplicate Results and Field Duplicate

Sample Type	Sample ID	Analyte	MS Recovery	MSD Recovery	Result - 1	Result - 2	RPD%

Any runs with one (1) or more recoveries outside limits?

Run Date	Surrogate Compound	Analyte	Original % Recovery	Re-Run Recovery	Comments

Laboratory Control Sample

Sample Type	Sample ID	Compound	LCS %	LCSD %	RPD%

No Quals

TIER 2 DATA REVIEW –VOLATILE ANALYSIS

ANALYSIS: VOLATILE ANALYSIS
EPA METHOD: 8260B
BY: GC/MS

MATRIX: LIQUID X
SOLID/SOIL_____ TCLP_____

REQUIREMENT		Y	N	NA
Tune Calibration Check	BFB Every 12 Hours	✓		
Initial Calibration Check	% RSD <OR = 30%	✓		
Continuing Calibration Check	% DIFF <OR = 25%	> run under ICAL		
SPCC Compounds **(Chlorobenzene/1, 1, 2, 2-TCA)**	**RF** = OR > 0.30	✓		
Bromoform, 1, 1-Dichlorooethane, Chloromethane	**RF** = OR > 0.10	✓		
Any CCAL Mean	RF = OR > 0.05			✓
All sample/blank internal standard areas	Within those set by Lab	✓		
All sample/blank internal standard retention times	Within 30 sec. of Standard IS RT	✓		

If "NO," List all samples below

Tune Calibration

BFB Run		GC/MS ID	Prep Batch	Associated Samples
Date	Time			

Initial Calibration

Calibration		GC/MS ID	Matrix	Mean RRF	% RSD	Compound	Associated Samples
Date	Time						

Continuing Calibration

Calibration		GC/MS ID	Matrix	Mean RRF	% RSD	Compound	Associated Samples
Date	Time						

Internal Standard Performance

Sample Number	Internal Standard Area/RT	Limits	Comments

TIER 1 DATA REVIEW – ORGANIC ANALYSIS

ANALYSIS: Dissolved Gases MATRIX: LIQUID X

EPA METHOD: RSK 175 SOLID/SOIL _____ TCLP _____

BY: GC OR HPLC methane, ethane, ethene HOLD TIMES MET? yes

REQUIREMENTS		Y	N	NA
Method Blank	Every Batch or 20 Samples	✓		
	All Compounds <MDL	✓		
Matrix Spike % Recovery Values	Within those set by Lab	✓		
Matrix Spike Dup % Recovery Values	Within those set by Lab	✓		
MS/MSD RPD	<Lab QC Limits	✓		
% LCS Recovery Value	Within those set by Lab	✓		
% LCSD Recovery Values	Within those set by Lab			✓
~~LCS/LCSD~~ Sample dup RPD	<Lab QC Limits	✓		
% Surrogate Recovery Limits	Within those set by Lab			✓
Field Duplicate Evaluation	RPD < 35% or difference < 2 SQL for water			✓
	RPD < 50% or difference < 3.5 SQL for soil			✓

If "NO," List all samples below:

Blank Information

Run Date	Run Time	Date Extracted	Blank ID	Compound	Conc. Units	Associated Samples

Matrix Spike / Matrix Spike Duplicate Results and Field Duplicate

Sample Type	Sample ID	Analyte	MS Recovery	MSD Recovery	Result - 1	Result - 2	RPD %

Any runs with one (1) or more recoveries outside limits for each fraction?

Run Date	Surrogate Compound	Analyte	Original % Recovery	Re-Run Recovery	Comments

Laboratory Control Sample

Sample Type	Sample ID	Compound	LCS %	LCSD %	Comments

Initial and continuing calibrations w/in QC limits
No Quals

TIER 2 DATA REVIEW – ORGANIC ANALYSIS

ANALYSIS: Dissolved Gas
EPA METHOD: RSK 175
BY: GC OR HPLC

MATRIX: LIQUID X
SOLID/SOIL_____ TCLP_____

REQUIREMENT		Y	N	NA
Initial Calibration	% RSD <OR = 30% or r^2 > 0.990	✓		
Continuing Calibration	% DIFF <OR = 15%	✓		
All sample/blank internal standard (IS) retention times	Within those set by lab			✓
All sample/blank IS retention times	Within 30 sec. of Standard IS			✓

If "NO," list all samples below

Initial Calibration

Calibration		Instrument ID	Matrix	Correlation Coefficient	% RSD	Compound	Associated Samples
Date	Time						

Continuing Calibration

Calibration		Instrument ID	Matrix	% Diff.	Compound	Associated Samples
Date	Time					

Internal Standard Performance

Sample Number	Compound	Internal Standard Area/RT	Limits

TIER 1 DATA REVIEW – CONVENTIONAL ANALYSIS

ANALYSIS: alkalinity 310.1
METHOD: ~~perchlorate 314~~
BY: Chloride 325.3
sulfate 375.3

MATRIX: LIQUID X
SOLID/SOIL____
sulfide 376.1
TOC 9060

NO_3^-, NO_2 – 353.2, 3
specific conductivity 120.1

REQUIREMENTS pH 150.1		Y	N	NA
Method Blank	Every Batch or 20 Samples	✓		
	All Compounds <MDL	✓		
Matrix Spike Recovery Values	75-125%	✓		
Matrix Spike Duplicate Recovery Values	75-125%			✓
LCS Recovery Values	80-120%	✓		
LCSD Recovery Values	80-120%			✓
~~LCS / LCSD~~ dup RPD	<20%	✓		
PRECISION (QC Sample Field Sample or Field Sample/QC Sample)	RPD < 35% or difference < 2 SQL for water			✓
	RPD < 50% or difference < 3.5 SQL for soil			✓

If "NO," List all samples below:

Blank Type	Run Date	Run Time	Date Prepped	Blank ID	Compound	Concentration (units)	Associated Samples

Matrix Spike / Matrix Spike Duplicate Results and Field Duplicate

Sample Type	Sample ID	Analyte	MS Recovery	MSD Recovery	Result -1	Result - 2	RPD%

Laboratory Control Sample Analysis

File Name	Analysis Type / Element	Instrument ID	Recovery %

TIER 1 DATA REVIEW – CONVENTIONAL ANALYSIS – Florida

ANALYSIS: specific conductivity
METHOD: perchlorate 314.1
BY: _____

MATRIX: LIQUID X
SOLID/SOIL_____

REQUIREMENTS		Y	N	NA
Method Blank	Every Batch or 20 Samples	✓		
	All Compounds <MDL	✓		
Matrix Spike Recovery Values	75-125%	✓		
Matrix Spike Duplicate Recovery Values	75-125%			
LCS Recovery Values	80-120%	✓		
LCSD Recovery Values	80-120%			
~~LCS / LCSD~~ Sample dup RPD	<20%	✓		
PRECISION (QC Sample Field Sample or Field Sample/QC Sample)	RPD < 35% or difference < 2 SQL for water			
	RPD < 50% or difference < 3.5 SQL for soil			

If "NO," List all samples below:

Blank Type	Run Date	Run Time	Date Prepped	Blank ID	Compound	Concentration (units)	Associated Samples

Matrix Spike / Matrix Spike Duplicate Results and Field Duplicate

Sample Type	Sample ID	Analyte	MS Recovery	MSD Recovery	Result -1	Result - 2	RPD%

Laboratory Control Sample Analysis

File Name	Analysis Type / Element	Instrument ID	Recovery %

perchlorate IC + CCV's w/in QC limits

T16395 ✓

Shaw™
Shaw E & I, Inc.

ANALYSIS REQUEST AND CHAIN-OF-CUSTODY RECORD

REFERENCE COC NO.: LHAAP-Team 3-01A

PAGE 1 OF 1

Project Name/No: Lonhorn Army Ammunition Plant
Sample Team Member: Allen Willmore - 713-247-9292
Project Contact/Phone: Kay Everette - 713-996-4421
Project Manager: Praveen Srivastav
Project No.: 117591
Required Report Date:

Sample Shipment Date:
Laboratory Destination: Accutest
Laboratory Contact: Agnes - 713-271-4700
Lab Address 10165 Harwin Dr. # 150
Houston, TX 77036
Carrier Waybill No.:

Bill To: Diane Meyer
Shaw E & I
3010 Briarpark Drive
Houston, TX 77042

Report To: Diane Meyer
Shaw E & I
3010 Briarpark Drive
Houston, TX 77042

Sample Number	Sample Type/ Description	Date/Time Collected	Container Type	Sample Volume	Pre-servative	Requested Testing Program	Condition on Receipt	Disposal Record
~~46WW02~~						~~Full Project list - see below~~		Allen
~~LHSMW-18~~						~~Full Project list - see below~~		Allen
~~LHSMW-19~~						~~Full Project list - see below~~		Allen
~~46WW01~~						~~Full Project list - see below~~		Allen
~~46WW03~~						~~Full Project list - see below~~		Allen
~~LHSMW-22~~						~~Full Project list - see below~~		Allen
LHSMW-23 - ~~Feb07~~	Water	2/19/07 13:20	See	Below		Full Project list - see below		
. Feb2007						Full Project list - see below		
.								
TB-	TB 2/19/07	2/19/07				Vocs by SW8260B		

Full Project List:

VOC-FULL by SW8260B	3 - 40 ml VOA vials w/ HCL	ALKALINITY by 310.1	1 - ~~100~~ 500 ml HDPE
ANIONS by 300.0	1 - ~~500~~ 1000 ml HDPE	TOC ~~by 415.1~~	~~1 - 100 ml HDPE w/ H2SO4~~
SULFIDES by 376.2	1 - 500 ml HDPE w/ ZN Acetate	~~MN - DISS IRON by SW6010B~~	~~1 - 250 ml HDPE~~
PERCHLORATE by 314.0	1 - 500 ml HDPE		
GASES by RSK-SOP 175 + CO2	~~2~~ 3 - 40 ml VOA vials		

3 - 40mL VOA Vials w/ HCL

~~Trip Blank~~ Allen 2/19/07

Special Instructions:

Sample Disposal:
Return to Client: ___ Disposal by Lab: X Archive: ___

Turnaround Time:
Normal: X Rush: ___

Level of QC Required:
Definitive: X Project Specific: ___

1. Relinquished by: Susan Allen	Shaw ~~E & I Corporation~~ Allen	Date: 2/19/06 Time: 16:30	1. Received by: Scott Beesinger	Date: 2/20/07 Time: 07:30
2. Relinquished by: Scott Beesinger		Date: 2/20/07 Time: 08:30	2. Received by:	Date: Time:
3. Relinquished by:		Date: Time:	2. Received by: A. Poling	Date: 2/21/07 Time: 10:10

Comments:

000775

T16395

Shaw
Shaw E & I, Inc.

ANALYSIS REQUEST AND CHAIN-OF-CUSTODY RECORD

REFERENCE COC NO.: LHAAP-Team 1-01A

PAGE 1 OF 1

Project Name/No: Lonhorn Army Ammunition Plant
Sample Team Member: Allen Willmore - 713-247-9292
Project Contact/Phone: Kay Everette - 713-996-4421
Project Manager: Praveen Srivastav
Project No.: 117591
Required Report Date:

Sample Shipment Date:
Laboratory Destination: Accutest
Laboratory Contact: Agnes - 713-271-4700
Lab Address 10165 Harwin Dr. # 150
Houston, TX 77036
Carrier Waybill No.:

Bill To: Diane Meyer
Shaw E & I
3010 Briarpark Drive
Houston, TX 77042

Report To: Diane Meyer
Shaw E & I
3010 Briarpark Drive
Houston, TX 77042

Sample Number	Sample Type/ Description	Date/Time Collected	Container Type	Sample Volume	Pre-servative	Requested Testing Program	Condition on Receipt	Disposal Record
~~46WW02~~						~~Full Project list - see below~~		AU
~~LHSMW-18~~						~~Full Project list - see below~~		AU
~~LHSMW-19~~						~~Full Project list - see below~~		AU
2 46WW04 Feb 2007	Ground Water	2-19-07 1405	← See	Below →		Full Project list - see below		
~~46WW01~~						~~Full Project list - see below~~		AU
~~LHSMW-23~~						~~Full Project list - see below~~		AU
~~LHSMW-23~~						~~Full Project list - see below~~		AU
-						~~Full Project list - see below~~		
-								
TB- Feb 2007	TB Feb 2007					Vocs by SW8260B		

Full Project List:

VOC-FULL by SW8260B	3 - 40 ml VOA vials w/ HCL	ALKALINITY by 310.1	1 - ~~250~~ 500 ml HDPE AU
ANIONS by 300.0	1 - ~~500~~ 1000 ml HDPE AU	TOC by ~~CRA~~	~~1 - 100 ml HDPE w/ H2SO4~~ 3-40 mL VOA vials w/HCL AU
SULFIDES by 376.2	1 - 500 ml HDPE w/ ZN Acetate	MN ~~DISCRON~~ by SW6010B	~~1 - 250 ml HDPE~~ AU
PERCHLORATE by 314.0	1 - 500 ml HDPE	Trip Blank Feb 2007	
GASES by RSK-SOP 175 + CO_2 GOOD AU	~~4~~ 3 - 40 ml VOA vials		

Special Instructions:

Sample Disposal:
Return to Client: ___ Disposal by Lab: X Archive: ___

Turnaround Time:
Normal: X Rush: ___

Level of QC Required:
Definitive: X Project Specific: ___

1. Relinquished by: Allen Willmore ~~Scott Boesiger~~	Date: 2/19/07 Time: 16:30	1. Received by: Scott Boesiger	Date: 2/20/07 Time: 07:30
2. Relinquished by: Scott Boesiger	Date: 2/20/07 Time: 08:30	2. Received by:	Date: Time:
3. Relinquished by:	Date: Time:	2. Received by: A. Rodney	Date: 2/21/07 Time: 10:10

Comments:

0007754

LHAAP - Team 2 - O/A

T116395

Shaw™
Shaw E & I, Inc.

ANALYSIS REQUEST AND CHAIN-OF-CUSTODY RECORD

REFERENCE COC NO.:

PAGE 1 OF

Project Name/No: Lonhorn Army Ammunition Plant
Sample Team Member: Allen Willmore - 713-247-9292
Project Contact/Phone: Kay Everette - 713-996-4421
Project Manager: Praveen Srivastav
Project No.: 117591
Required Report Date:

Sample Shipment Date:
Laboratory Destination: Accutest
Laboratory Contact: Agnes - 713-271-4700
Lab Address 10165 Harwin Dr. # 150
Houston, TX 77036
Carrier Waybill No.:

Bill To: Diane Meyer
Shaw E & I
3010 Briarpark Drive
Houston, TX 77042

Report To: Diane Meyer
Shaw E & I
3010 Briarpark Drive
Houston, TX 77042

Sample Number	Sample Type/ Description	Date/Time Collected	Container Type	Sample Volume	Pre-servative	Requested Testing Program	Condition on Receipt	Disposal Record
~~46WW02~~						Full Project list - see below		
~~LHSMW-18~~						Full Project list - see below		
~~LHSMW-19~~						~~Full Project list - see below~~		
~~46WW04~~						~~Full Project list - see below~~		
3 46WW01 - FEB 2007	GW	02-19-07/1456	See Below			Full Project list - see below		
~~LHSMW-22~~						~~Full Project list - see below~~		
~~LHSMW-23~~						~~Full Project list - see below~~		
						Full Project list - see below		
4 TB-021907	TB-021907					Vocs by SW8260B		

Full Project List:

VOC-FULL by SW8260B	3 - 40 ml VOA vials w/ HCL	ALKALINITY by 310.1	1 - ~~100~~ 500 ml HDPE
ANIONS by 300.0	1 - ~~500~~ 1000 ml HDPE	TOC by 415.1	~~1 - 100 ml HDPE w/ H2SO4~~ 3-40 ml VOA vials w/HCL
SULFIDES by 376.2	1 - 500 ml HDPE w/ ZN Acetate	~~MN - DISS IRON by SW6010B~~	~~1 - 250 ml HDPE~~
PERCHLORATE by 314.0	1 - 500 ml HDPE		
GASES by RSK-SOP 175 +CO_2	3 - 40 ml VOA vials w/HCL		

TRIP BLANK

Special Instructions:

Sample Disposal:
Return to Client: ___ Disposal by Lab: X Archive: ___

Turnaround Time:
Normal: X Rush: ___

Level of QC Required:
Definitive: X Project Specific: ___

1. Relinquished by: SHAW ~~The Corporation~~	Date: 2/19/07 Time: 1800	1. Received by: Scott Beesinger	Date: 2/20/07 Time: 07:30
2. Relinquished by: Scott Beesinger	Date: 2/20/07 Time: 08:30	2. Received by:	Date: Time:
3. Relinquished by:	Date: Time:	2. Received by: A. Rodney	Date: 2/21/07 Time: 10:10

Comments:

0007775

ACCUTEST.

SAMPLE RECEIPT LOG

JOB #: T16395

DATE/TIME RECEIVED: 2/21/07 | 10:10

CLIENT: Shaw

INITIALS: AR

Condition/Variance (Circle "Y" for yes and "N" for no or NA. If "N" is circled, see variance for explanation):

1. (Y) N Sample received in undamaged condition.
2. (Y) N Samples received within temp. range.
3. (Y) N Sample received with proper pH.
4. (Y) N Sample received in proper containers.
5. (Y) N Sample volume sufficient for analysis.
6. (Y) N Sample received with chain of custody.
7. (Y) N Chain of Custody matches **sample IDs and analysis** on containers.
8. (Y) N Samples Headspace acceptable
9. (Y) N NA Custody seal received intact and tamper not evident on cooler.
10. Y N (NA) Custody seal received intact and tamper not evident on bottles.

SAMPLE or FIELD ID	BOTTLE #	DATE SAMPLED	MATRIX	VOLUME	LOCATION	PRESERV.	PH
1-3	1-6	2/19	AQ	40ml.	VREF	1,2,3,4,5,6	U, <2, >12, NA
|	7-9	|	|	1	2G	1,2,3,4,5,6	U, <2, >12, NA
|	10	|	|	P1000	|	1,2,3,4,5,6	U, <2, >12, NA
|	11	|	|	P500	|	1,2,3,4,5,6	U, <2, >12, NA
|	12	|	|	|	|	1,2,3,4,5,6	U, <2, >12, NA
|	13	|	|	|	|	1,2,3,4,5,6	U, <2, >12, NA
(t.b.) 4	1-2	2/19 ~~N/A~~	|	40ml.	VREF	1,2,3,4,5,6	U, <2, >12, NA
						1,2,3,4,5,6	U, <2, >12, NA
						1,2,3,4,5,6	U, <2, >12, NA
						1,2,3,4,5,6	U, <2, >12, NA
						1,2,3,4,5,6	U, <2, >12, NA
						1,2,3,4,5,6	U, <2, >12, NA
						1,2,3,4,5,6	U, <2, >12, NA
						1,2,3,4,5,6	U, <2, >12, NA
						1,2,3,4,5,6	U, <2, >12, NA
						1,2,3,4,5,6	U, <2, >12, NA

AR 2-21-07

LOCATION: WI: Walk-In VR: Volatile Refrig. SUB: Subcontract EF: Encore Freezer

PRESERVATIVES: 1: None 2: HCL 3: HNO3 4: H2SO4 5: NAOH 6: Other

Comments:

pH of waters checked excluding volatiles

pH of soils N/A

Delivery method: Courier: UPS

COOLER TEMP: 3.0 COOLER TEMP:

COOLER TEMP: COOLER TEMP:

Form: SM012, Rev.07/28/06, QAO

0007750

e-Hardcopy 2.0
Automated Report

Gulf Coast ACCUTEST Laboratories

IT'S ALL IN THE CHEMISTRY

04/10/07

Technical Report for

Shaw E & I, Inc.

Longhorn Army Ammunition Plant

PROJECT #117591

Accutest Job Number: T16411

Sampling Date: 02/20/07

Report to:

Shaw E & I, Inc.

diane.meyer@shawgrp.com

ATTN: Diane Meyer

Total number of pages in report: 173

ACCUTEST LABORATORIES 50 YEARS 1956-2006

ACCREDITED IN ACCORDANCE WITH nelac

Test results contained within this data package meet the requirements of the National Environmental Laboratory Accreditation Conference and/or state specific certification programs as applicable.

Ron Martino
Laboratory Manager

This report shall not be reproduced, except in its entirety, without the written approval of Accutest Laboratories.

Sections: 1 2 3 4 5 6 7 8 9 10

Table of Contents

-1-

Section 1: Sample Summary 4
Section 2: Case Narrative/Conformance Summary 5
Section 3: Sample Results 9
3.1: T16411-1: LHSMW22-FEB2007 10
3.2: T16411-2: 17WW01-FEB2007 14
3.3: T16411-3: 17WW01-FEB2007-FD 19
3.4: T16411-4: LHSMW19-FEB2007 24
3.5: T16411-5: 46WW02-FEB2007 28
3.6: T16411-6: 47WW14-FEB2007 32
3.7: T16411-7: 47WW14-FEB2007-FD 36
3.8: T16411-8: 47WW13-FEB2007 40
3.9: T16411-9: LHSMW04-FEB2007 44
3.10: T16411-10: LHSMW18-FEB2007 48
3.11: T16411-11: TRIP BLANK 52
Section 4: Misc. Forms 54
4.1: Chain of Custody 55
4.2: LRC Form 62
Section 5: GC/MS Volatiles - QC Data Summaries 66
5.1: Method Blank Summary 67
5.2: Blank Spike Summary 76
5.3: Matrix Spike/Matrix Spike Duplicate Summary 84
5.4: Instrument Performance Checks (BFB) 93
5.5: Internal Standard Area Summaries 99
5.6: Surrogate Recovery Summaries 104
5.7: Initial and Continuing Calibration Summaries 106
Section 6: General Chemistry - QC Data Summaries 119
6.1: Method Blank and Spike Results Summary 120
6.2: Duplicate Results Summary 121
6.3: Matrix Spike Results Summary 122
6.4: Matrix Spike Duplicate Results Summary 123
Section 7: Misc. Forms (Accutest Laboratories Southeast, Inc.) 124
7.1: Chain of Custody 125
Section 8: GC Volatiles - QC Data (Accutest Laboratories Southeast, Inc.) 127
8.1: Method Blank Summary 128
8.2: Blank Spike Summary 129
8.3: Matrix Spike Summary 130
8.4: Duplicate Summary 131
8.5: Initial and Continuing Calibration Summaries 132
Section 9: GC Semi-volatiles - QC Data (Accutest Laboratories Southeast, Inc.) 137
9.1: Method Blank Summary 138
9.2: Blank Spike Summary 140
9.3: Matrix Spike/Matrix Spike Duplicate Summary 142

Table of Contents

9.4: Surrogate Recovery Summaries 143
9.5: GC Surrogate Retention Time Summaries 144
9.6: Initial and Continuing Calibration Summaries 147
Section 10: General Chemistry - QC Data (Accutest Laboratories Southeast, Inc.) 167
10.1: Method Blank and Spike Results Summary 168
10.2: Duplicate Results Summary 169
10.3: Matrix Spike Results Summary 170
10.4: Inst QC GN24390: Perchlorate 171

Accutest Laboratories

Sample Summary

Shaw E & I, Inc.

Job No: T16411

Longhorn Army Ammunition Plant
Project No: PROJECT #117591

Sample Number	Collected Date	Collected Time By	Received	Matrix Code	Matrix Type	Client Sample ID
T16411-1	02/20/07	08:50 SO	02/22/07	AQ	Ground Water	LHSMW22-FEB2007
T16411-2	02/20/07	15:10 SO	02/22/07	AQ	Ground Water	17WW01-FEB2007
T16411-3	02/20/07	15:10 SO	02/22/07	AQ	Ground Water	17WW01-FEB2007-FD
T16411-4	02/20/07	09:51 SO	02/22/07	AQ	Ground Water	LHSMW19-FEB2007
T16411-5	02/20/07	09:34 SO	02/22/07	AQ	Ground Water	46WW02-FEB2007
T16411-6	02/20/07	12:23 SO	02/22/07	AQ	Ground Water	47WW14-FEB2007
T16411-7	02/20/07	12:23 SO	02/22/07	AQ	Ground Water	47WW14-FEB2007-FD
T16411-8	02/20/07	15:54 SO	02/22/07	AQ	Ground Water	47WW13-FEB2007
T16411-9	02/20/07	15:30 SO	02/22/07	AQ	Ground Water	LHSMW04-FEB2007
T16411-10	02/20/07	00:00 SO	02/22/07	AQ	Ground Water	LHSMW18-FEB2007
T16411-10D	02/20/07	00:00 SO	02/22/07	AQ	Water Dup/MSD	LHSMW18-FEB2007
T16411-10S	02/20/07	00:00 SO	02/22/07	AQ	Water Matrix Spike	LHSMW18-FEB2007
T16411-11	02/20/07	00:00 SO	02/22/07	AQ	Trip Blank Water	TRIP BLANK

ACCUTEST Laboratories

SAMPLE DELIVERY GROUP CASE NARRATIVE

Client:	Shaw E & I, Inc.	Job No	T16411
Site:	Longhorn Army Ammunition Plant	Report Date	3/14/2007 4:06:05 PM

10 Samples and 1 Trip Blank were collected on 02/20/2007 and were received at Accutest on 02/22/2007 properly preserved, at 5.8 Deg. C and intact. These Samples received an Accutest job number of T16411. A listing of the Laboratory Sample ID, Client Sample ID and dates of collection are presented in the Results Summary Section of this report.

Except as noted below, all method specified calibrations and quality control performance criteria were met for this job. For more information, please refer to QC summary pages.

Volatiles by GCMS By Method SW846 8260B

Matrix AQ **Batch ID:** VF2305

- All samples were analyzed within the recommended method holding time.
- Sample(s) T16395-2MS, T16395-2MSD were used as the QC samples indicated.
- All method blanks for this batch meet method specific criteria.

Matrix AQ **Batch ID:** VF2306

- All samples were analyzed within the recommended method holding time.
- Sample(s) T16411-10MS, T16411-10MSD were used as the QC samples indicated.
- All method blanks for this batch meet method specific criteria.
- Matrix Spike Recovery(s) for Styrene are outside control limits. Probable cause due to matrix interference.
- Matrix Spike Duplicate Recovery(s) for Styrene are outside control limits. Probable cause due to matrix interference.

Matrix AQ **Batch ID:** VF2307

- All samples were analyzed within the recommended method holding time.
- All method blanks for this batch meet method specific criteria.
- Sample(s) T16431-22MS, T16431-22MSD were used as the QC samples indicated.
- Matrix Spike Duplicate Recovery(s) for Styrene are outside control limits. Probable cause due to matrix interference.

Matrix AQ **Batch ID:** VF2309

- All samples were analyzed within the recommended method holding time.
- All method blanks for this batch meet method specific criteria.
- Sample(s) T16440-7MS, T16440-7MSD were used as the QC samples indicated.

Matrix AQ **Batch ID:** VF2311

- All samples were analyzed within the recommended method holding time.
- Sample(s) T16440-12MS, T16440-12MSD were used as the QC samples indicated.
- All method blanks for this batch meet method specific criteria.

Volatiles by GC By Method RSKSOP-147/175

Matrix AQ **Batch ID:** F:GXY991

- Analysis performed at Accutest Laboratories, Orlando, FL.

Wet Chemistry By Method EPA 120.1

Matrix AQ	Batch ID: F:R17941

- Specific Conductivity Analysis performed at Accutest Laboratories, Orlando, FL.

Matrix AQ	Batch ID: GN11341

- All samples were analyzed within the recommended method holding time.
- All method blanks for this batch meet method specific criteria.
- Sample(s) T16411-10DUP were used as the QC samples for Specific Conductivity.

Wet Chemistry By Method EPA 150.1/9040

Matrix AQ	Batch ID: GN11285

- Sample(s) T16411-10DUP were used as the QC samples for pH.

Wet Chemistry By Method EPA 310.1

Matrix AQ	Batch ID: GN11336

- All samples were analyzed within the recommended method holding time.
- All method blanks for this batch meet method specific criteria.
- Sample(s) T16411-10DUP, T16411-10MS were used as the QC samples for Alkalinity, Total as CaCO3.

Wet Chemistry By Method EPA 314

Matrix AQ	Batch ID: F:GP9043

- Perchlorate Analysis performed at Accutest Laboratories, Orlando, FL.

Wet Chemistry By Method EPA 325.3

Matrix AQ	Batch ID: GN11331

- All samples were analyzed within the recommended method holding time.
- All method blanks for this batch meet method specific criteria.

Wet Chemistry By Method EPA 353.2

Matrix AQ	Batch ID: GN11283

- All method blanks for this batch meet method specific criteria.
- Sample(s) T16411-10DUP, T16411-10MS were used as the QC samples for Nitrogen, Nitrite.

Matrix AQ	Batch ID: GN11291

- All method blanks for this batch meet method specific criteria.
- Sample(s) T16411-10DUP, T16411-10MS were used as the QC samples for Nitrogen, Nitrate + Nitrite.

Wet Chemistry By Method EPA 375.3

Matrix AQ	Batch ID: GN11356

- All samples were analyzed within the recommended method holding time.
- All method blanks for this batch meet method specific criteria.
- Sample(s) T16411-10DUP, T16411-10MS were used as the QC samples for Sulfate.

Wet Chemistry By Method EPA 376.1

Matrix AQ	Batch ID: GN11286

- All samples were analyzed within the recommended method holding time.
- All method blanks for this batch meet method specific criteria.
- Sample(s) T16411-10DUP were used as the QC samples for Sulfide.

Wet Chemistry By Method EPA 415.1/9060

Matrix AQ	Batch ID: GN11296

- All samples were analyzed within the recommended method holding time.
- All method blanks for this batch meet method specific criteria.
- Sample(s) T16411-10DUP, T16411-10MS were used as the QC samples for Total Organic Carbon.

Matrix AQ	Batch ID: GN11304

- All samples were analyzed within the recommended method holding time.
- All method blanks for this batch meet method specific criteria.
- Sample(s) T16445-18DUP, T16445-18MS were used as the QC samples for Total Organic Carbon.

Wet Chemistry By Method SM18 4500NO3E/NO2B

Matrix AQ	Batch ID: R15439

- Nitrogen, Nitrate: Calculated as: (Nitrogen, Nitrate + Nitrite) - (Nitrogen, Nitrite)

Accutest Laboratories Gulf Coast (ALGC) certifies that this report meets the project requirements for analytical data produced for the samples as received at ALGC and as stated on the COC. ALGC certifies that the data meets the Data QualityObjectives for precision, accuracy and completeness as specified in the ALGC Quality Manual except as noted above. This report is to be used in its entirety. ALGC is not responsible for any assumptions of data quality if partial data packages are used

SAMPLE DELIVERY GROUP CASE NARRATIVE

Client: Accutest Laboratories Gulf Coast, Inc. **Job No:** T16411

Site: ITTXHO: Longhorn Army Ammunition Plant **Report Date:** 3/13/2007 11:33:51

10 Samples were collected on 02/20/2007 and were received at Accutest SE on 02/23/2007 properly preserved, at 3.0 Deg. C and intact. These Samples had an Accutest job number of T16411. A listing of the Laboratory Sample ID, Client Sample ID and dates of collection are presented in the Results Summary Section of this report.

Except as noted below, all method specified calibrations and quality control performance criteria were met for this job. For more information, please refer to QC summary pages.

Volatiles by GC by Method RSKSOP-147/175

Matrix: AQ **Batch ID:** GXY991

All samples were analyzed within the recommended method holding time.

All method blanks for this batch meet method specific criteria.

Samples T16411-10DUP, T16411-10MS were used as the QC samples indicated.

Extractables by GC by Method SW846 8330A

Matrix: AQ **Batch ID:** OP19630

All samples were extracted within the recommended method holding time.

All samples were analyzed within the recommended method holding time.

All method blanks for this batch meet method specific criteria.

Samples F47423-3MS, F47423-3MSD were used as the QC samples indicated.

Matrix Spike Duplicate Recovery for RDX is outside control limits. Probable cause: due to matrix interference.

Wet Chemistry by Method EPA 314

Matrix: AQ **Batch ID:** GP9043

All samples were prepped within the recommended method holding time.

All samples were analyzed within the recommended method holding time.

All method blanks for this batch meet method specific criteria.

Samples T16411-10DUP, T16411-10MS, T16411-1DUP, T16411-1MS were used as the QC samples for Perchlorate.

Accutest Laboratories Southeast (ALSE) certifies that this report meets the project requirements for analytical data produced for the samples as received at ALSE and as stated on the COC. ALSE certifies that the data meets the Data Quality Objectives for precision, accuracy and completeness as specified in the ALSE Quality Manual except as noted above. This report is to be used in its entirety. ALSE is not responsible for any assumptions of data quality if partial data packages are used.

Narrative prepared by:

Date: March 13, 2007

Ellen Pampel, Inorganic QA (signature on file)

Tuesday, March 13, 2007

Sample Results

Report of Analysis

Accutest Laboratories

Report of Analysis

Client Sample ID:	LHSMW22-FEB2007		
Lab Sample ID:	T16411-1	Date Sampled:	02/20/07
Matrix:	AQ - Ground Water	Date Received:	02/22/07
Method:	SW846 8260B	Percent Solids:	n/a
Project:	Longhorn Army Ammunition Plant		

	File ID	DF	Analyzed	By	Prep Date	Prep Batch	Analytical Batch
Run #1	F0078982.D	1	03/01/07	LJ	n/a	n/a	VF2305
Run #2							

	Purge Volume
Run #1	5.0 ml
Run #2	

VOA TCL List

CAS No.	Compound	Result	RL	MDL	Units	Q
67-64-1	Acetone	4.3	50	2.8	ug/l	J
71-43-2	Benzene	0.23 U	2.0	0.23	ug/l	
75-27-4	Bromodichloromethane	0.33 U	2.0	0.33	ug/l	
75-25-2	Bromoform	0.65 U	2.0	0.65	ug/l	
108-90-7	Chlorobenzene	0.54 U	2.0	0.54	ug/l	
75-00-3	Chloroethane	0.46 U	2.0	0.46	ug/l	
67-66-3	Chloroform	0.66 U	2.0	0.66	ug/l	
75-15-0	Carbon disulfide	0.62 U	2.0	0.62	ug/l	
56-23-5	Carbon tetrachloride	0.52 U	2.0	0.52	ug/l	
75-34-3	1,1-Dichloroethane	0.52 U	2.0	0.52	ug/l	
75-35-4	1,1-Dichloroethylene	0.68 U	2.0	0.68	ug/l	
107-06-2	1,2-Dichloroethane	0.53 U	2.0	0.53	ug/l	
78-87-5	1,2-Dichloropropane	0.59 U	2.0	0.59	ug/l	
124-48-1	Dibromochloromethane	0.68 U	2.0	0.68	ug/l	
156-59-2	cis-1,2-Dichloroethylene	0.83 U	2.0	0.83	ug/l	
10061-01-5	cis-1,3-Dichloropropene	0.59 U	2.0	0.59	ug/l	
156-60-5	trans-1,2-Dichloroethylene	0.75 U	2.0	0.75	ug/l	
10061-02-6	trans-1,3-Dichloropropene	0.61 U	2.0	0.61	ug/l	
100-41-4	Ethylbenzene	0.48 U	2.0	0.48	ug/l	
591-78-6	2-Hexanone	1.9 U	10	1.9	ug/l	
108-10-1	4-Methyl-2-pentanone	7.3 U	10	7.3	ug/l	
74-83-9	Methyl bromide	0.47 U	2.0	0.47	ug/l	
74-87-3	Methyl chloride	0.60 U	2.0	0.60	ug/l	
75-09-2	Methylene chloride	0.67 U	5.0	0.67	ug/l	
78-93-3	Methyl ethyl ketone	3.0 U	10	3.0	ug/l	
100-42-5	Styrene	0.50 U	2.0	0.50	ug/l	
71-55-6	1,1,1-Trichloroethane	0.37 U	2.0	0.37	ug/l	
79-34-5	1,1,2,2-Tetrachloroethane	0.46 U	2.0	0.46	ug/l	
79-00-5	1,1,2-Trichloroethane	0.66 U	2.0	0.66	ug/l	
127-18-4	Tetrachloroethylene	0.74 U	2.0	0.74	ug/l	
108-88-3	Toluene	0.54 U	2.0	0.54	ug/l	
79-01-6	Trichloroethylene	0.63 U	2.0	0.63	ug/l	

U = Not detected MDL - Method Detection Limit
RL = Reporting Limit
E = Indicates value exceeds calibration range

J = Indicates an estimated value
B = Indicates analyte found in associated method blank
N = Indicates presumptive evidence of a compound

Accutest Laboratories

Report of Analysis

Client Sample ID:	LHSMW22-FEB2007		
Lab Sample ID:	T16411-1	Date Sampled:	02/20/07
Matrix:	AQ - Ground Water	Date Received:	02/22/07
Method:	SW846 8260B	Percent Solids:	n/a
Project:	Longhorn Army Ammunition Plant		

VOA TCL List

CAS No.	Compound	Result	RL	MDL	Units	Q
75-01-4	Vinyl chloride	0.32 U	2.0	0.32	ug/l	
1330-20-7	Xylene (total)	1.1 U	6.0	1.1	ug/l	

CAS No.	Surrogate Recoveries	Run# 1	Run# 2	Limits
1868-53-7	Dibromofluoromethane	104%		73-139%
17060-07-0	1,2-Dichloroethane-D4	99%		66-139%
2037-26-5	Toluene-D8	112%		77-148%
460-00-4	4-Bromofluorobenzene	130%		84-150%

U = Not detected MDL - Method Detection Limit
RL = Reporting Limit
E = Indicates value exceeds calibration range

J = Indicates an estimated value
B = Indicates analyte found in associated method blank
N = Indicates presumptive evidence of a compound

Accutest Laboratories

Report of Analysis

Client Sample ID:	LHSMW22-FEB2007		
Lab Sample ID:	T16411-1	Date Sampled:	02/20/07
Matrix:	AQ - Ground Water	Date Received:	02/22/07
Method:	RSKSOP-147/175	Percent Solids:	n/a
Project:	Longhorn Army Ammunition Plant		

	File ID	DF	Analyzed	By	Prep Date	Prep Batch	Analytical Batch
Run #1 [a]	XY025235.D	1	02/26/07	AFL	n/a	n/a	F:GXY991
Run #2							

CAS No.	Compound	Result	RL	MDL	Units	Q
74-82-8	Methane	2.56	0.50	0.30	ug/l	
74-84-0	Ethane	0.60 U	1.0	0.60	ug/l	
74-85-1	Ethene	0.80 U	1.0	0.80	ug/l	

(a) Analysis performed at Accutest Laboratories, Orlando, FL.

U = Not detected MDL - Method Detection Limit
RL = Reporting Limit
E = Indicates value exceeds calibration range

J = Indicates an estimated value
B = Indicates analyte found in associated method blank
N = Indicates presumptive evidence of a compound

Accutest Laboratories

Report of Analysis

Client Sample ID:	LHSMW22-FEB2007		
Lab Sample ID:	T16411-1	Date Sampled:	02/20/07
Matrix:	AQ - Ground Water	Date Received:	02/22/07
		Percent Solids:	n/a
Project:	Longhorn Army Ammunition Plant		

General Chemistry

Analyte	Result	RL	MDL	Units	DF	Analyzed	By	Method
Perchlorate by IC								
Perchlorate [a]	4.0 U	10	4.0	ug/l	1	03/01/07 16:06	AFL	EPA 314
Alkalinity, Total as CaCO3	218	5.0	0.30	mg/l	1	03/03/07 08:15	EB	EPA 310.1
Carbon Dioxide	1380	5.0		mg/l	1	03/06/07	RM	SM18 4500CO2D
Chloride	1530	1.0	0.57	mg/l	1	03/02/07 12:30	EB	EPA 325.3
Nitrogen, Nitrate [b]	0.35	0.10	0.0050	mg/l	1	02/26/07 09:23	LN	SM18 4500NO3E/NO2B
Nitrogen, Nitrate + Nitrite	0.40	0.050	0.0050	mg/l	1	02/26/07 09:23	LN	EPA 353.2
Nitrogen, Nitrite	0.050	0.050	0.0030	mg/l	1	02/22/07 12:22	LN	EPA 353.2
Specific Conductivity [a]	7580	0.50	0.50	umhos/cm	1	03/06/07	AFL	EPA 120.1
Sulfate	3020	100	2.6	mg/l	10	03/06/07 18:00	EB	EPA 375.3
Sulfide	U	0.20		mg/l	1	02/24/07 10:00	LN	EPA 376.1
Total Organic Carbon	13.0	1.0	0.092	mg/l	1	02/26/07 07:46	LN	EPA 415.1/9060
pH	5.5			su	1	02/23/07 08:15	EB	EPA 150.1/9040

(a) Analysis performed at Accutest Laboratories, Orlando, FL.
(b) Calculated as: (Nitrogen, Nitrate + Nitrite) - (Nitrogen, Nitrite)

RL = Reporting Limit
MDL = Method Detection Limit

U = Indicates a result < MDL
B = Indicates a result >= MDL but < RL

Accutest Laboratories

Report of Analysis

Client Sample ID:	17WW01-FEB2007		
Lab Sample ID:	T16411-2	Date Sampled:	02/20/07
Matrix:	AQ - Ground Water	Date Received:	02/22/07
Method:	SW846 8260B	Percent Solids:	n/a
Project:	Longhorn Army Ammunition Plant		

	File ID	DF	Analyzed	By	Prep Date	Prep Batch	Analytical Batch
Run #1	F0078983.D	1	03/01/07	LJ	n/a	n/a	VF2305
Run #2	F0079008.D	100	03/01/07	LJ	n/a	n/a	VF2306

	Purge Volume
Run #1	5.0 ml
Run #2	5.0 ml

VOA TCL List

CAS No.	Compound	Result	RL	MDL	Units	Q
67-64-1	Acetone	2.8 U	50	2.8	ug/l	
71-43-2	Benzene	1.6	2.0	0.23	ug/l	J
75-27-4	Bromodichloromethane	0.33 U	2.0	0.33	ug/l	
75-25-2	Bromoform	0.65 U	2.0	0.65	ug/l	
108-90-7	Chlorobenzene	0.54 U	2.0	0.54	ug/l	
75-00-3	Chloroethane	0.46 U	2.0	0.46	ug/l	
67-66-3	Chloroform	0.66 U	2.0	0.66	ug/l	
75-15-0	Carbon disulfide	0.62 U	2.0	0.62	ug/l	
56-23-5	Carbon tetrachloride	0.52 U	2.0	0.52	ug/l	
75-34-3	1,1-Dichloroethane	9.7	2.0	0.52	ug/l	
75-35-4	1,1-Dichloroethylene	32.6	2.0	0.68	ug/l	
107-06-2	1,2-Dichloroethane	44.9	2.0	0.53	ug/l	
78-87-5	1,2-Dichloropropane	0.59 U	2.0	0.59	ug/l	
124-48-1	Dibromochloromethane	0.68 U	2.0	0.68	ug/l	
156-59-2	cis-1,2-Dichloroethylene	17.4	2.0	0.83	ug/l	
10061-01-5	cis-1,3-Dichloropropene	0.59 U	2.0	0.59	ug/l	
156-60-5	trans-1,2-Dichloroethylene	6.5	2.0	0.75	ug/l	
10061-02-6	trans-1,3-Dichloropropene	0.61 U	2.0	0.61	ug/l	
100-41-4	Ethylbenzene	0.48 U	2.0	0.48	ug/l	
591-78-6	2-Hexanone	1.9 U	10	1.9	ug/l	
108-10-1	4-Methyl-2-pentanone	7.3 U	10	7.3	ug/l	
74-83-9	Methyl bromide	0.47 U	2.0	0.47	ug/l	
74-87-3	Methyl chloride	0.60 U	2.0	0.60	ug/l	
75-09-2	Methylene chloride	0.67 U	5.0	0.67	ug/l	
78-93-3	Methyl ethyl ketone	3.0 U	10	3.0	ug/l	
100-42-5	Styrene	0.50 U	2.0	0.50	ug/l	
71-55-6	1,1,1-Trichloroethane	0.37 U	2.0	0.37	ug/l	
79-34-5	1,1,2,2-Tetrachloroethane	0.46 U	2.0	0.46	ug/l	
79-00-5	1,1,2-Trichloroethane	0.89	2.0	0.66	ug/l	J
127-18-4	Tetrachloroethylene	0.74 U	2.0	0.74	ug/l	
108-88-3	Toluene	0.54 U	2.0	0.54	ug/l	
79-01-6	Trichloroethylene	5970 [a]	200	63	ug/l	

U = Not detected MDL - Method Detection Limit J = Indicates an estimated value
RL = Reporting Limit B = Indicates analyte found in associated method blank
E = Indicates value exceeds calibration range N = Indicates presumptive evidence of a compound

Accutest Laboratories

Report of Analysis

Client Sample ID:	17WW01-FEB2007		
Lab Sample ID:	T16411-2	Date Sampled:	02/20/07
Matrix:	AQ - Ground Water	Date Received:	02/22/07
Method:	SW846 8260B	Percent Solids:	n/a
Project:	Longhorn Army Ammunition Plant		

VOA TCL List

CAS No.	Compound	Result	RL	MDL	Units	Q
75-01-4	Vinyl chloride	0.32 U	2.0	0.32	ug/l	
1330-20-7	Xylene (total)	1.1 U	6.0	1.1	ug/l	

CAS No.	Surrogate Recoveries	Run# 1	Run# 2	Limits
1868-53-7	Dibromofluoromethane	105%	101%	73-139%
17060-07-0	1,2-Dichloroethane-D4	100%	95%	66-139%
2037-26-5	Toluene-D8	109%	108%	77-148%
460-00-4	4-Bromofluorobenzene	132%	131%	84-150%

(a) Result is from Run# 2

U = Not detected MDL - Method Detection Limit
RL = Reporting Limit
E = Indicates value exceeds calibration range

J = Indicates an estimated value
B = Indicates analyte found in associated method blank
N = Indicates presumptive evidence of a compound

Accutest Laboratories

Report of Analysis

Client Sample ID:	17WW01-FEB2007		
Lab Sample ID:	T16411-2	Date Sampled:	02/20/07
Matrix:	AQ - Ground Water	Date Received:	02/22/07
Method:	RSKSOP-147/175	Percent Solids:	n/a
Project:	Longhorn Army Ammunition Plant		

	File ID	DF	Analyzed	By	Prep Date	Prep Batch	Analytical Batch
Run #1 [a]	XY025236.D	1	02/26/07	AFL	n/a	n/a	F:GXY991
Run #2							

CAS No.	Compound	Result	RL	MDL	Units	Q
74-82-8	Methane	9.73	0.50	0.30	ug/l	
74-84-0	Ethane	0.60 U	1.0	0.60	ug/l	
74-85-1	Ethene	0.80 U	1.0	0.80	ug/l	

(a) Analysis performed at Accutest Laboratories, Orlando, FL.

U = Not detected MDL - Method Detection Limit
RL = Reporting Limit
E = Indicates value exceeds calibration range

J = Indicates an estimated value
B = Indicates analyte found in associated method blank
N = Indicates presumptive evidence of a compound

Accutest Laboratories

Report of Analysis

Client Sample ID:	17WW01-FEB2007		
Lab Sample ID:	T16411-2	Date Sampled:	02/20/07
Matrix:	AQ - Ground Water	Date Received:	02/22/07
Method:	SW846 8330A SW846 3535A	Percent Solids:	n/a
Project:	Longhorn Army Ammunition Plant		

	File ID	DF	Analyzed	By	Prep Date	Prep Batch	Analytical Batch
Run #1 [a]	GG020170.D	1	02/28/07	AFL	02/26/07	F:OP19630	F:GGG904
Run #2							

	Initial Volume	Final Volume
Run #1	990 ml	10.0 ml
Run #2		

CAS No.	Compound	Result	RL	MDL	Units	Q
2691-41-0	HMX	0.061 U	0.20	0.061	ug/l	
121-82-4	RDX	0.076 U	0.20	0.076	ug/l	
99-65-0	1,3-Dinitrobenzene	0.071 U	0.20	0.071	ug/l	
606-20-2	2,6-Dinitrotoluene	0.066 U	0.20	0.066	ug/l	
121-14-2	2,4-Dinitrotoluene	0.076 U	0.20	0.076	ug/l	
35572-78-2	2-amino-4,6-Dinitrotoluene	0.071 U	0.20	0.071	ug/l	
19406-51-0	4-amino-2,6-Dinitrotoluene	0.081 U	0.20	0.081	ug/l	
98-95-3	Nitrobenzene	0.061 U	0.20	0.061	ug/l	
88-72-2	o-Nitrotoluene	0.061 U	0.20	0.061	ug/l	
99-08-1	m-Nitrotoluene	0.076 U	0.20	0.076	ug/l	
99-99-0	p-Nitrotoluene	0.076 U	0.20	0.076	ug/l	
479-45-8	Tetryl	0.076 U	0.20	0.076	ug/l	
99-35-4	1,3,5-Trinitrobenzene	0.096 U	0.20	0.096	ug/l	
118-96-7	2,4,6-Trinitrotoluene	0.081 U	0.20	0.081	ug/l	

CAS No.	Surrogate Recoveries	Run# 1	Run# 2	Limits
610-39-9	3,4-Dinitrotoluene	98%		70-136%

(a) Analysis performed at Accutest Laboratories, Orlando, FL.

U = Not detected MDL - Method Detection Limit
RL = Reporting Limit
E = Indicates value exceeds calibration range
J = Indicates an estimated value
B = Indicates analyte found in associated method blank
N = Indicates presumptive evidence of a compound

Accutest Laboratories

Report of Analysis

3.2 3

Client Sample ID:	17WW01-FEB2007		
Lab Sample ID:	T16411-2	Date Sampled:	02/20/07
Matrix:	AQ - Ground Water	Date Received:	02/22/07
		Percent Solids:	n/a
Project:	Longhorn Army Ammunition Plant		

General Chemistry

Analyte	Result	RL	MDL	Units	DF	Analyzed	By	Method
Perchlorate by IC								
Perchlorate [a]	4.0 U	10	4.0	ug/l	1	03/01/07 16:21	AFL	EPA 314
Alkalinity, Total as CaCO3	145	5.0	0.30	mg/l	1	03/03/07 08:15	EB	EPA 310.1
Carbon Dioxide	375	5.0		mg/l	1	03/06/07	RM	SM18 4500CO2D
Chloride	1250	1.0	0.57	mg/l	1	03/02/07 12:30	EB	EPA 325.3
Nitrogen, Nitrate [b]	0.38	0.10	0.0050	mg/l	1	02/26/07 09:23	LN	SM18 4500NO3E/NO2B
Nitrogen, Nitrate + Nitrite	0.40	0.050	0.0050	mg/l	1	02/26/07 09:23	LN	EPA 353.2
Nitrogen, Nitrite	0.020 B	0.050	0.0030	mg/l	1	02/22/07 12:22	LN	EPA 353.2
Specific Conductivity [a]	3930	0.50	0.50	umhos/cm	1	03/06/07	AFL	EPA 120.1
Sulfate [c]	89.0	3.0	0.66	mg/l	1	04/03/07 07:15	RM	EPA 375.2
Sulfide	U	0.20		mg/l	1	02/24/07 10:00	LN	EPA 376.1
Total Organic Carbon	4.0	1.0	0.092	mg/l	1	02/26/07 07:46	LN	EPA 415.1/9060
pH	5.9			su	1	02/23/07 08:15	EB	EPA 150.1/9040

(a) Analysis performed at Accutest Laboratories, Orlando, FL.
(b) Calculated as: (Nitrogen, Nitrate + Nitrite) - (Nitrogen, Nitrite)
(c) Confirmation analysis. Sample analyzed outside of the analytical holding time.

RL = Reporting Limit
MDL = Method Detection Limit

U = Indicates a result < MDL
B = Indicates a result >= MDL but < RL

Accutest Laboratories

Report of Analysis

Client Sample ID:	17WW01-FEB2007-FD		
Lab Sample ID:	T16411-3	Date Sampled:	02/20/07
Matrix:	AQ - Ground Water	Date Received:	02/22/07
Method:	SW846 8260B	Percent Solids:	n/a
Project:	Longhorn Army Ammunition Plant		

	File ID	DF	Analyzed	By	Prep Date	Prep Batch	Analytical Batch
Run #1	F0078984.D	1	03/01/07	LJ	n/a	n/a	VF2305
Run #2	F0079009.D	100	03/01/07	LJ	n/a	n/a	VF2306

	Purge Volume
Run #1	5.0 ml
Run #2	5.0 ml

VOA TCL List

CAS No.	Compound	Result	RL	MDL	Units	Q
67-64-1	Acetone	2.8 U	50	2.8	ug/l	
71-43-2	Benzene	1.5	2.0	0.23	ug/l	J
75-27-4	Bromodichloromethane	0.33 U	2.0	0.33	ug/l	
75-25-2	Bromoform	0.65 U	2.0	0.65	ug/l	
108-90-7	Chlorobenzene	0.54 U	2.0	0.54	ug/l	
75-00-3	Chloroethane	0.46 U	2.0	0.46	ug/l	
67-66-3	Chloroform	0.66 U	2.0	0.66	ug/l	
75-15-0	Carbon disulfide	0.62 U	2.0	0.62	ug/l	
56-23-5	Carbon tetrachloride	0.52 U	2.0	0.52	ug/l	
75-34-3	1,1-Dichloroethane	9.3	2.0	0.52	ug/l	
75-35-4	1,1-Dichloroethylene	31.8	2.0	0.68	ug/l	
107-06-2	1,2-Dichloroethane	44.0	2.0	0.53	ug/l	
78-87-5	1,2-Dichloropropane	0.59 U	2.0	0.59	ug/l	
124-48-1	Dibromochloromethane	0.68 U	2.0	0.68	ug/l	
156-59-2	cis-1,2-Dichloroethylene	16.9	2.0	0.83	ug/l	
10061-01-5	cis-1,3-Dichloropropene	0.59 U	2.0	0.59	ug/l	
156-60-5	trans-1,2-Dichloroethylene	6.6	2.0	0.75	ug/l	
10061-02-6	trans-1,3-Dichloropropene	0.61 U	2.0	0.61	ug/l	
100-41-4	Ethylbenzene	0.48 U	2.0	0.48	ug/l	
591-78-6	2-Hexanone	1.9 U	10	1.9	ug/l	
108-10-1	4-Methyl-2-pentanone	7.3 U	10	7.3	ug/l	
74-83-9	Methyl bromide	0.47 U	2.0	0.47	ug/l	
74-87-3	Methyl chloride	0.60 U	2.0	0.60	ug/l	
75-09-2	Methylene chloride	0.67 U	5.0	0.67	ug/l	
78-93-3	Methyl ethyl ketone	3.0 U	10	3.0	ug/l	
100-42-5	Styrene	0.50 U	2.0	0.50	ug/l	
71-55-6	1,1,1-Trichloroethane	0.37 U	2.0	0.37	ug/l	
79-34-5	1,1,2,2-Tetrachloroethane	0.46 U	2.0	0.46	ug/l	
79-00-5	1,1,2-Trichloroethane	1.0	2.0	0.66	ug/l	J
127-18-4	Tetrachloroethylene	0.74 U	2.0	0.74	ug/l	
108-88-3	Toluene	0.54 U	2.0	0.54	ug/l	
79-01-6	Trichloroethylene	6240 [a]	200	63	ug/l	

U = Not detected MDL - Method Detection Limit J = Indicates an estimated value
RL = Reporting Limit B = Indicates analyte found in associated method blank
E = Indicates value exceeds calibration range N = Indicates presumptive evidence of a compound

Accutest Laboratories

Report of Analysis

Client Sample ID:	17WW01-FEB2007-FD		
Lab Sample ID:	T16411-3	Date Sampled:	02/20/07
Matrix:	AQ - Ground Water	Date Received:	02/22/07
Method:	SW846 8260B	Percent Solids:	n/a
Project:	Longhorn Army Ammunition Plant		

VOA TCL List

CAS No.	Compound	Result	RL	MDL	Units	Q
75-01-4	Vinyl chloride	0.32 U	2.0	0.32	ug/l	
1330-20-7	Xylene (total)	1.1 U	6.0	1.1	ug/l	

CAS No.	Surrogate Recoveries	Run# 1	Run# 2	Limits
1868-53-7	Dibromofluoromethane	104%	107%	73-139%
17060-07-0	1,2-Dichloroethane-D4	96%	101%	66-139%
2037-26-5	Toluene-D8	109%	112%	77-148%
460-00-4	4-Bromofluorobenzene	134%	125%	84-150%

(a) Result is from Run# 2

U = Not detected MDL - Method Detection Limit
RL = Reporting Limit
E = Indicates value exceeds calibration range

J = Indicates an estimated value
B = Indicates analyte found in associated method blank
N = Indicates presumptive evidence of a compound

Accutest Laboratories

Report of Analysis

Client Sample ID:	17WW01-FEB2007-FD		
Lab Sample ID:	T16411-3	Date Sampled:	02/20/07
Matrix:	AQ - Ground Water	Date Received:	02/22/07
Method:	RSKSOP-147/175	Percent Solids:	n/a
Project:	Longhorn Army Ammunition Plant		

	File ID	DF	Analyzed	By	Prep Date	Prep Batch	Analytical Batch
Run #1 [a]	XY025237.D	1	02/26/07	AFL	n/a	n/a	F:GXY991
Run #2							

CAS No.	Compound	Result	RL	MDL	Units	Q
74-82-8	Methane	10.1	0.50	0.30	ug/l	
74-84-0	Ethane	0.60 U	1.0	0.60	ug/l	
74-85-1	Ethene	0.80 U	1.0	0.80	ug/l	

(a) Analysis performed at Accutest Laboratories, Orlando, FL.

U = Not detected MDL - Method Detection Limit
RL = Reporting Limit
E = Indicates value exceeds calibration range

J = Indicates an estimated value
B = Indicates analyte found in associated method blank
N = Indicates presumptive evidence of a compound

Accutest Laboratories

Report of Analysis

Client Sample ID:	17WW01-FEB2007-FD		
Lab Sample ID:	T16411-3	Date Sampled:	02/20/07
Matrix:	AQ - Ground Water	Date Received:	02/22/07
Method:	SW846 8330A SW846 3535A	Percent Solids:	n/a
Project:	Longhorn Army Ammunition Plant		

	File ID	DF	Analyzed	By	Prep Date	Prep Batch	Analytical Batch
Run #1 [a]	GG020171.D	1	02/28/07	AFL	02/26/07	F:OP19630	F:GGG904
Run #2							

	Initial Volume	Final Volume
Run #1	1000 ml	10.0 ml
Run #2		

CAS No.	Compound	Result	RL	MDL	Units	Q
2691-41-0	HMX	0.060 U	0.20	0.060	ug/l	
121-82-4	RDX	0.075 U	0.20	0.075	ug/l	
99-65-0	1,3-Dinitrobenzene	0.070 U	0.20	0.070	ug/l	
606-20-2	2,6-Dinitrotoluene	0.065 U	0.20	0.065	ug/l	
121-14-2	2,4-Dinitrotoluene	0.075 U	0.20	0.075	ug/l	
35572-78-2	2-amino-4,6-Dinitrotoluene	0.070 U	0.20	0.070	ug/l	
19406-51-0	4-amino-2,6-Dinitrotoluene	0.080 U	0.20	0.080	ug/l	
98-95-3	Nitrobenzene	0.060 U	0.20	0.060	ug/l	
88-72-2	o-Nitrotoluene	0.060 U	0.20	0.060	ug/l	
99-08-1	m-Nitrotoluene	0.075 U	0.20	0.075	ug/l	
99-99-0	p-Nitrotoluene	0.075 U	0.20	0.075	ug/l	
479-45-8	Tetryl	0.075 U	0.20	0.075	ug/l	
99-35-4	1,3,5-Trinitrobenzene	0.095 U	0.20	0.095	ug/l	
118-96-7	2,4,6-Trinitrotoluene	0.080 U	0.20	0.080	ug/l	

CAS No.	Surrogate Recoveries	Run# 1	Run# 2	Limits
610-39-9	3,4-Dinitrotoluene	96%		70-136%

(a) Analysis performed at Accutest Laboratories, Orlando, FL.

U = Not detected MDL - Method Detection Limit
RL = Reporting Limit
E = Indicates value exceeds calibration range

J = Indicates an estimated value
B = Indicates analyte found in associated method blank
N = Indicates presumptive evidence of a compound

Accutest Laboratories

Report of Analysis

Client Sample ID:	17WW01-FEB2007-FD		
Lab Sample ID:	T16411-3	Date Sampled:	02/20/07
Matrix:	AQ - Ground Water	Date Received:	02/22/07
		Percent Solids:	n/a
Project:	Longhorn Army Ammunition Plant		

General Chemistry

Analyte	Result	RL	MDL	Units	DF	Analyzed	By	Method
Perchlorate by IC								
Perchlorate [a]	4.0 U	10	4.0	ug/l	1	03/01/07 16:35	AFL	EPA 314
Alkalinity, Total as CaCO3	149	5.0	0.30	mg/l	1	03/03/07 08:15	EB	EPA 310.1
Carbon Dioxide	380	5.0		mg/l	1	03/06/07	RM	SM18 4500CO2D
Chloride	1310	1.0	0.57	mg/l	1	03/02/07 12:30	EB	EPA 325.3
Nitrogen, Nitrate [b]	<0.10	0.10	0.0050	mg/l	1	02/26/07 09:23	LN	SM18 4500NO3E/NO2B
Nitrogen, Nitrate + Nitrite	0.10	0.050	0.0050	mg/l	1	02/26/07 09:23	LN	EPA 353.2
Nitrogen, Nitrite	0.020 B	0.050	0.0030	mg/l	1	02/22/07 12:22	LN	EPA 353.2
Specific Conductivity [a]	4000	0.50	0.50	umhos/cm	1	03/06/07	AFL	EPA 120.1
Sulfate	107	40	2.6	mg/l	4	03/06/07 18:00	EB	EPA 375.3
Sulfide	U	0.20		mg/l	1	02/24/07 10:00	LN	EPA 376.1
Total Organic Carbon	5.0	1.0	0.092	mg/l	1	02/26/07 07:46	LN	EPA 415.1/9060
pH	5.9			su	1	02/23/07 08:15	EB	EPA 150.1/9040

(a) Analysis performed at Accutest Laboratories, Orlando, FL.
(b) Calculated as: (Nitrogen, Nitrate + Nitrite) - (Nitrogen, Nitrite)

RL = Reporting Limit
MDL = Method Detection Limit

U = Indicates a result < MDL
B = Indicates a result >= MDL but < RL

Accutest Laboratories

Report of Analysis

Client Sample ID:	LHSMW19-FEB2007		
Lab Sample ID:	T16411-4	Date Sampled:	02/20/07
Matrix:	AQ - Ground Water	Date Received:	02/22/07
Method:	SW846 8260B	Percent Solids:	n/a
Project:	Longhorn Army Ammunition Plant		

	File ID	DF	Analyzed	By	Prep Date	Prep Batch	Analytical Batch
Run #1	F0079001.D	1	03/01/07	LJ	n/a	n/a	VF2306
Run #2							

	Purge Volume
Run #1	5.0 ml
Run #2	

VOA TCL List

CAS No.	Compound	Result	RL	MDL	Units	Q
67-64-1	Acetone	2.8 U	50	2.8	ug/l	
71-43-2	Benzene	0.23 U	2.0	0.23	ug/l	
75-27-4	Bromodichloromethane	0.33 U	2.0	0.33	ug/l	
75-25-2	Bromoform	0.65 U	2.0	0.65	ug/l	
108-90-7	Chlorobenzene	0.54 U	2.0	0.54	ug/l	
75-00-3	Chloroethane	0.46 U	2.0	0.46	ug/l	
67-66-3	Chloroform	0.66 U	2.0	0.66	ug/l	
75-15-0	Carbon disulfide	0.62 U	2.0	0.62	ug/l	
56-23-5	Carbon tetrachloride	0.52 U	2.0	0.52	ug/l	
75-34-3	1,1-Dichloroethane	0.52 U	2.0	0.52	ug/l	
75-35-4	1,1-Dichloroethylene	0.68 U	2.0	0.68	ug/l	
107-06-2	1,2-Dichloroethane	0.53 U	2.0	0.53	ug/l	
78-87-5	1,2-Dichloropropane	0.59 U	2.0	0.59	ug/l	
124-48-1	Dibromochloromethane	0.68 U	2.0	0.68	ug/l	
156-59-2	cis-1,2-Dichloroethylene	0.83 U	2.0	0.83	ug/l	
10061-01-5	cis-1,3-Dichloropropene	0.59 U	2.0	0.59	ug/l	
156-60-5	trans-1,2-Dichloroethylene	0.75 U	2.0	0.75	ug/l	
10061-02-6	trans-1,3-Dichloropropene	0.61 U	2.0	0.61	ug/l	
100-41-4	Ethylbenzene	0.48 U	2.0	0.48	ug/l	
591-78-6	2-Hexanone	1.9 U	10	1.9	ug/l	
108-10-1	4-Methyl-2-pentanone	7.3 U	10	7.3	ug/l	
74-83-9	Methyl bromide	0.47 U	2.0	0.47	ug/l	
74-87-3	Methyl chloride	0.60 U	2.0	0.60	ug/l	
75-09-2	Methylene chloride	0.67 U	5.0	0.67	ug/l	
78-93-3	Methyl ethyl ketone	3.0 U	10	3.0	ug/l	
100-42-5	Styrene	0.50 U	2.0	0.50	ug/l	
71-55-6	1,1,1-Trichloroethane	0.37 U	2.0	0.37	ug/l	
79-34-5	1,1,2,2-Tetrachloroethane	0.46 U	2.0	0.46	ug/l	
79-00-5	1,1,2-Trichloroethane	0.66 U	2.0	0.66	ug/l	
127-18-4	Tetrachloroethylene	0.74 U	2.0	0.74	ug/l	
108-88-3	Toluene	0.54 U	2.0	0.54	ug/l	
79-01-6	Trichloroethylene	85.5	2.0	0.63	ug/l	

U = Not detected MDL - Method Detection Limit J = Indicates an estimated value
RL = Reporting Limit B = Indicates analyte found in associated method blank
E = Indicates value exceeds calibration range N = Indicates presumptive evidence of a compound

Accutest Laboratories

Report of Analysis

3.4

Client Sample ID:	LHSMW19-FEB2007		
Lab Sample ID:	T16411-4	Date Sampled:	02/20/07
Matrix:	AQ - Ground Water	Date Received:	02/22/07
Method:	SW846 8260B	Percent Solids:	n/a
Project:	Longhorn Army Ammunition Plant		

VOA TCL List

CAS No.	Compound	Result	RL	MDL	Units	Q
75-01-4	Vinyl chloride	0.32 U	2.0	0.32	ug/l	
1330-20-7	Xylene (total)	1.1 U	6.0	1.1	ug/l	

CAS No.	Surrogate Recoveries	Run# 1	Run# 2	Limits
1868-53-7	Dibromofluoromethane	101%		73-139%
17060-07-0	1,2-Dichloroethane-D4	94%		66-139%
2037-26-5	Toluene-D8	110%		77-148%
460-00-4	4-Bromofluorobenzene	127%		84-150%

U = Not detected MDL - Method Detection Limit
RL = Reporting Limit
E = Indicates value exceeds calibration range

J = Indicates an estimated value
B = Indicates analyte found in associated method blank
N = Indicates presumptive evidence of a compound

Accutest Laboratories

Report of Analysis

Client Sample ID:	LHSMW19-FEB2007		
Lab Sample ID:	T16411-4	Date Sampled:	02/20/07
Matrix:	AQ - Ground Water	Date Received:	02/22/07
Method:	RSKSOP-147/175	Percent Solids:	n/a
Project:	Longhorn Army Ammunition Plant		

	File ID	DF	Analyzed	By	Prep Date	Prep Batch	Analytical Batch
Run #1 [a]	XY025238.D	1	02/26/07	AFL	n/a	n/a	F:GXY991
Run #2							

CAS No.	Compound	Result	RL	MDL	Units	Q
74-82-8	Methane	0.30 U	0.50	0.30	ug/l	
74-84-0	Ethane	0.60 U	1.0	0.60	ug/l	
74-85-1	Ethene	0.80 U	1.0	0.80	ug/l	

(a) Analysis performed at Accutest Laboratories, Orlando, FL.

U = Not detected MDL - Method Detection Limit
RL = Reporting Limit
E = Indicates value exceeds calibration range

J = Indicates an estimated value
B = Indicates analyte found in associated method blank
N = Indicates presumptive evidence of a compound

Accutest Laboratories

Report of Analysis

Client Sample ID:	LHSMW19-FEB2007		
Lab Sample ID:	T16411-4	Date Sampled:	02/20/07
Matrix:	AQ - Ground Water	Date Received:	02/22/07
		Percent Solids:	n/a
Project:	Longhorn Army Ammunition Plant		

General Chemistry

Analyte	Result	RL	MDL	Units	DF	Analyzed	By	Method
Perchlorate by IC								
Perchlorate [a]	4.0 U	10	4.0	ug/l	1	03/01/07 17:18	AFL	EPA 314
Alkalinity, Total as CaCO3	138	5.0	0.30	mg/l	1	03/03/07 08:15	EB	EPA 310.1
Carbon Dioxide	110	5.0		mg/l	1	03/06/07	RM	SM18 4500CO2D
Chloride	161	1.0	0.57	mg/l	1	03/02/07 12:30	EB	EPA 325.3
Nitrogen, Nitrate [b]	<0.10	0.10	0.0050	mg/l	1	02/26/07 09:23	LN	SM18 4500NO3E/NO2B
Nitrogen, Nitrate + Nitrite	0.010 B	0.050	0.0050	mg/l	1	02/26/07 09:23	LN	EPA 353.2
Nitrogen, Nitrite	0.010 B	0.050	0.0030	mg/l	1	02/22/07 12:22	LN	EPA 353.2
Specific Conductivity [a]	1360	0.50	0.50	umhos/cm	1	03/06/07	AFL	EPA 120.1
Sulfate	309	40	2.6	mg/l	4	03/06/07 18:00	EB	EPA 375.3
Sulfide	U	0.20		mg/l	1	02/24/07 10:00	LN	EPA 376.1
Total Organic Carbon	5.0	1.0	0.092	mg/l	1	02/26/07 07:46	LN	EPA 415.1/9060
pH	6.4			su	1	02/23/07 08:15	EB	EPA 150.1/9040

(a) Analysis performed at Accutest Laboratories, Orlando, FL.
(b) Calculated as: (Nitrogen, Nitrate + Nitrite) - (Nitrogen, Nitrite)

RL = Reporting Limit
MDL = Method Detection Limit

U = Indicates a result < MDL
B = Indicates a result >= MDL but < RL

Accutest Laboratories

Report of Analysis

3.5 3

Client Sample ID:	46WW02-FEB2007		
Lab Sample ID:	T16411-5	Date Sampled:	02/20/07
Matrix:	AQ - Ground Water	Date Received:	02/22/07
Method:	SW846 8260B	Percent Solids:	n/a
Project:	Longhorn Army Ammunition Plant		

	File ID	DF	Analyzed	By	Prep Date	Prep Batch	Analytical Batch
Run #1	F0079002.D	1	03/01/07	LJ	n/a	n/a	VF2306
Run #2							

	Purge Volume
Run #1	5.0 ml
Run #2	

VOA TCL List

CAS No.	Compound	Result	RL	MDL	Units	Q
67-64-1	Acetone	2.8 U	50	2.8	ug/l	
71-43-2	Benzene	0.23 U	2.0	0.23	ug/l	
75-27-4	Bromodichloromethane	0.33 U	2.0	0.33	ug/l	
75-25-2	Bromoform	0.65 U	2.0	0.65	ug/l	
108-90-7	Chlorobenzene	0.54 U	2.0	0.54	ug/l	
75-00-3	Chloroethane	0.46 U	2.0	0.46	ug/l	
67-66-3	Chloroform	0.66 U	2.0	0.66	ug/l	
75-15-0	Carbon disulfide	0.62 U	2.0	0.62	ug/l	
56-23-5	Carbon tetrachloride	0.52 U	2.0	0.52	ug/l	
75-34-3	1,1-Dichloroethane	0.52 U	2.0	0.52	ug/l	
75-35-4	1,1-Dichloroethylene	1.3	2.0	0.68	ug/l	J
107-06-2	1,2-Dichloroethane	0.53 U	2.0	0.53	ug/l	
78-87-5	1,2-Dichloropropane	0.59 U	2.0	0.59	ug/l	
124-48-1	Dibromochloromethane	0.68 U	2.0	0.68	ug/l	
156-59-2	cis-1,2-Dichloroethylene	1.4	2.0	0.83	ug/l	J
10061-01-5	cis-1,3-Dichloropropene	0.59 U	2.0	0.59	ug/l	
156-60-5	trans-1,2-Dichloroethylene	0.75 U	2.0	0.75	ug/l	
10061-02-6	trans-1,3-Dichloropropene	0.61 U	2.0	0.61	ug/l	
100-41-4	Ethylbenzene	0.48 U	2.0	0.48	ug/l	
591-78-6	2-Hexanone	1.9 U	10	1.9	ug/l	
108-10-1	4-Methyl-2-pentanone	7.3 U	10	7.3	ug/l	
74-83-9	Methyl bromide	0.47 U	2.0	0.47	ug/l	
74-87-3	Methyl chloride	0.60 U	2.0	0.60	ug/l	
75-09-2	Methylene chloride	0.67 U	5.0	0.67	ug/l	
78-93-3	Methyl ethyl ketone	3.0 U	10	3.0	ug/l	
100-42-5	Styrene	0.50 U	2.0	0.50	ug/l	
71-55-6	1,1,1-Trichloroethane	0.37 U	2.0	0.37	ug/l	
79-34-5	1,1,2,2-Tetrachloroethane	0.46 U	2.0	0.46	ug/l	
79-00-5	1,1,2-Trichloroethane	0.66 U	2.0	0.66	ug/l	
127-18-4	Tetrachloroethylene	0.74 U	2.0	0.74	ug/l	
108-88-3	Toluene	0.54 U	2.0	0.54	ug/l	
79-01-6	Trichloroethylene	28.9	2.0	0.63	ug/l	

U = Not detected MDL - Method Detection Limit
RL = Reporting Limit
E = Indicates value exceeds calibration range

J = Indicates an estimated value
B = Indicates analyte found in associated method blank
N = Indicates presumptive evidence of a compound

Accutest Laboratories

Report of Analysis

Client Sample ID:	46WW02-FEB2007		
Lab Sample ID:	T16411-5	Date Sampled:	02/20/07
Matrix:	AQ - Ground Water	Date Received:	02/22/07
Method:	SW846 8260B	Percent Solids:	n/a
Project:	Longhorn Army Ammunition Plant		

VOA TCL List

CAS No.	Compound	Result	RL	MDL	Units	Q
75-01-4	Vinyl chloride	0.32 U	2.0	0.32	ug/l	
1330-20-7	Xylene (total)	1.1 U	6.0	1.1	ug/l	

CAS No.	Surrogate Recoveries	Run# 1	Run# 2	Limits
1868-53-7	Dibromofluoromethane	100%		73-139%
17060-07-0	1,2-Dichloroethane-D4	92%		66-139%
2037-26-5	Toluene-D8	108%		77-148%
460-00-4	4-Bromofluorobenzene	126%		84-150%

U = Not detected MDL - Method Detection Limit
RL = Reporting Limit
E = Indicates value exceeds calibration range

J = Indicates an estimated value
B = Indicates analyte found in associated method blank
N = Indicates presumptive evidence of a compound

Accutest Laboratories

Report of Analysis

Client Sample ID:	46WW02-FEB2007		
Lab Sample ID:	T16411-5	Date Sampled:	02/20/07
Matrix:	AQ - Ground Water	Date Received:	02/22/07
Method:	RSKSOP-147/175	Percent Solids:	n/a
Project:	Longhorn Army Ammunition Plant		

	File ID	DF	Analyzed	By	Prep Date	Prep Batch	Analytical Batch
Run #1 [a]	XY025245.D	1	02/26/07	AFL	n/a	n/a	F:GXY991
Run #2							

CAS No.	Compound	Result	RL	MDL	Units	Q
74-82-8	Methane	0.42	0.50	0.30	ug/l	J
74-84-0	Ethane	0.60 U	1.0	0.60	ug/l	
74-85-1	Ethene	0.80 U	1.0	0.80	ug/l	

(a) Analysis performed at Accutest Laboratories, Orlando, FL.

U = Not detected MDL - Method Detection Limit
RL = Reporting Limit
E = Indicates value exceeds calibration range

J = Indicates an estimated value
B = Indicates analyte found in associated method blank
N = Indicates presumptive evidence of a compound

Accutest Laboratories

Report of Analysis

3.5 3

Client Sample ID:	46WW02-FEB2007		
Lab Sample ID:	T16411-5	Date Sampled:	02/20/07
Matrix:	AQ - Ground Water	Date Received:	02/22/07
		Percent Solids:	n/a
Project:	Longhorn Army Ammunition Plant		

General Chemistry

Analyte	Result	RL	MDL	Units	DF	Analyzed	By	Method
Perchlorate by IC								
Perchlorate [a]	4.0 U	10	4.0	ug/l	1	03/01/07 17:33	AFL	EPA 314
Alkalinity, Total as CaCO3	7.0	5.0	0.30	mg/l	1	03/03/07 08:15	EB	EPA 310.1
Carbon Dioxide	175	5.0		mg/l	1	03/06/07	RM	SM18 4500CO2D
Chloride	30.0	1.0	0.57	mg/l	1	03/02/07 12:30	EB	EPA 325.3
Nitrogen, Nitrate [b]	0.19	0.10	0.0050	mg/l	1	02/26/07 09:23	LN	SM18 4500NO3E/NO2B
Nitrogen, Nitrate + Nitrite	0.20	0.050	0.0050	mg/l	1	02/26/07 09:23	LN	EPA 353.2
Nitrogen, Nitrite	0.010 B	0.050	0.0030	mg/l	1	02/22/07 12:22	LN	EPA 353.2
Specific Conductivity [a]	558	0.50	0.50	umhos/cm	1	03/06/07	AFL	EPA 120.1
Sulfate	238	20	2.6	mg/l	2	03/06/07 18:00	EB	EPA 375.3
Sulfide	U	0.20		mg/l	1	02/24/07 10:00	LN	EPA 376.1
Total Organic Carbon	9.0	1.0	0.092	mg/l	1	02/26/07 07:46	LN	EPA 415.1/9060
pH	4.9			su	1	02/23/07 08:15	EB	EPA 150.1/9040

(a) Analysis performed at Accutest Laboratories, Orlando, FL.
(b) Calculated as: (Nitrogen, Nitrate + Nitrite) - (Nitrogen, Nitrite)

RL = Reporting Limit
MDL = Method Detection Limit

U = Indicates a result < MDL
B = Indicates a result > = MDL but < RL

Accutest Laboratories

Report of Analysis

3.6

Client Sample ID:	47WW14-FEB2007		
Lab Sample ID:	T16411-6	Date Sampled:	02/20/07
Matrix:	AQ - Ground Water	Date Received:	02/22/07
Method:	SW846 8260B	Percent Solids:	n/a
Project:	Longhorn Army Ammunition Plant		

	File ID	DF	Analyzed	By	Prep Date	Prep Batch	Analytical Batch
Run #1	F0079006.D	1	03/01/07	LJ	n/a	n/a	VF2306
Run #2	F0079007.D	5	03/01/07	LJ	n/a	n/a	VF2306

	Purge Volume
Run #1	5.0 ml
Run #2	5.0 ml

VOA TCL List

CAS No.	Compound	Result	RL	MDL	Units	Q
67-64-1	Acetone	2.8 U	50	2.8	ug/l	
71-43-2	Benzene	0.23 U	2.0	0.23	ug/l	
75-27-4	Bromodichloromethane	0.33 U	2.0	0.33	ug/l	
75-25-2	Bromoform	0.65 U	2.0	0.65	ug/l	
108-90-7	Chlorobenzene	0.54 U	2.0	0.54	ug/l	
75-00-3	Chloroethane	0.46 U	2.0	0.46	ug/l	
67-66-3	Chloroform	0.66 U	2.0	0.66	ug/l	
75-15-0	Carbon disulfide	0.62 U	2.0	0.62	ug/l	
56-23-5	Carbon tetrachloride	0.52 U	2.0	0.52	ug/l	
75-34-3	1,1-Dichloroethane	2.2	2.0	0.52	ug/l	
75-35-4	1,1-Dichloroethylene	3.6	2.0	0.68	ug/l	
107-06-2	1,2-Dichloroethane	0.53 U	2.0	0.53	ug/l	
78-87-5	1,2-Dichloropropane	0.59 U	2.0	0.59	ug/l	
124-48-1	Dibromochloromethane	0.68 U	2.0	0.68	ug/l	
156-59-2	cis-1,2-Dichloroethylene	334 [a]	10	4.2	ug/l	
10061-01-5	cis-1,3-Dichloropropene	0.59 U	2.0	0.59	ug/l	
156-60-5	trans-1,2-Dichloroethylene	31.1	2.0	0.75	ug/l	
10061-02-6	trans-1,3-Dichloropropene	0.61 U	2.0	0.61	ug/l	
100-41-4	Ethylbenzene	0.48 U	2.0	0.48	ug/l	
591-78-6	2-Hexanone	1.9 U	10	1.9	ug/l	
108-10-1	4-Methyl-2-pentanone	7.3 U	10	7.3	ug/l	
74-83-9	Methyl bromide	0.47 U	2.0	0.47	ug/l	
74-87-3	Methyl chloride	0.60 U	2.0	0.60	ug/l	
75-09-2	Methylene chloride	0.67 U	5.0	0.67	ug/l	
78-93-3	Methyl ethyl ketone	3.0 U	10	3.0	ug/l	
100-42-5	Styrene	0.50 U	2.0	0.50	ug/l	
71-55-6	1,1,1-Trichloroethane	0.37 U	2.0	0.37	ug/l	
79-34-5	1,1,2,2-Tetrachloroethane	0.46 U	2.0	0.46	ug/l	
79-00-5	1,1,2-Trichloroethane	0.66 U	2.0	0.66	ug/l	
127-18-4	Tetrachloroethylene	0.74 U	2.0	0.74	ug/l	
108-88-3	Toluene	0.54 U	2.0	0.54	ug/l	
79-01-6	Trichloroethylene	346 [a]	10	3.2	ug/l	

U = Not detected MDL - Method Detection Limit J = Indicates an estimated value
RL = Reporting Limit B = Indicates analyte found in associated method blank
E = Indicates value exceeds calibration range N = Indicates presumptive evidence of a compound

Accutest Laboratories

Report of Analysis

3.6

Client Sample ID:	47WW14-FEB2007		
Lab Sample ID:	T16411-6	Date Sampled:	02/20/07
Matrix:	AQ - Ground Water	Date Received:	02/22/07
Method:	SW846 8260B	Percent Solids:	n/a
Project:	Longhorn Army Ammunition Plant		

VOA TCL List

CAS No.	Compound	Result	RL	MDL	Units	Q
75-01-4	Vinyl chloride	28.1	2.0	0.32	ug/l	
1330-20-7	Xylene (total)	1.1 U	6.0	1.1	ug/l	

CAS No.	Surrogate Recoveries	Run# 1	Run# 2	Limits
1868-53-7	Dibromofluoromethane	102%	101%	73-139%
17060-07-0	1,2-Dichloroethane-D4	94%	95%	66-139%
2037-26-5	Toluene-D8	106%	109%	77-148%
460-00-4	4-Bromofluorobenzene	129%	132%	84-150%

(a) Result is from Run# 2

U = Not detected MDL - Method Detection Limit
RL = Reporting Limit
E = Indicates value exceeds calibration range

J = Indicates an estimated value
B = Indicates analyte found in associated method blank
N = Indicates presumptive evidence of a compound

Accutest Laboratories

Report of Analysis

Client Sample ID:	47WW14-FEB2007		
Lab Sample ID:	T16411-6	Date Sampled:	02/20/07
Matrix:	AQ - Ground Water	Date Received:	02/22/07
Method:	RSKSOP-147/175	Percent Solids:	n/a
Project:	Longhorn Army Ammunition Plant		

	File ID	DF	Analyzed	By	Prep Date	Prep Batch	Analytical Batch
Run #1 [a]	XY025241.D	1	02/26/07	AFL	n/a	n/a	F:GXY991
Run #2							

CAS No.	Compound	Result	RL	MDL	Units	Q
74-82-8	Methane	44.8	0.50	0.30	ug/l	
74-84-0	Ethane	0.60 U	1.0	0.60	ug/l	
74-85-1	Ethene	0.80 U	1.0	0.80	ug/l	

(a) Analysis performed at Accutest Laboratories, Orlando, FL.

U = Not detected
MDL - Method Detection Limit
RL = Reporting Limit
E = Indicates value exceeds calibration range
J = Indicates an estimated value
B = Indicates analyte found in associated method blank
N = Indicates presumptive evidence of a compound

Accutest Laboratories

Report of Analysis

Client Sample ID:	47WW14-FEB2007		
Lab Sample ID:	T16411-6	Date Sampled:	02/20/07
Matrix:	AQ - Ground Water	Date Received:	02/22/07
		Percent Solids:	n/a
Project:	Longhorn Army Ammunition Plant		

General Chemistry

Analyte	Result	RL	MDL	Units	DF	Analyzed	By	Method
Perchlorate by IC								
Perchlorate [a]	4.0 U	10	4.0	ug/l	1	03/01/07 17:47	AFL	EPA 314
Alkalinity, Total as CaCO3	315	5.0	0.30	mg/l	1	03/03/07 08:15	EB	EPA 310.1
Carbon Dioxide	40.0	5.0		mg/l	1	03/06/07	RM	SM18 4500CO2D
Chloride	190	1.0	0.57	mg/l	1	03/02/07 12:30	EB	EPA 325.3
Nitrogen, Nitrate [b]	0.20	0.10	0.0050	mg/l	1	02/26/07 09:23	LN	SM18 4500NO3E/NO2B
Nitrogen, Nitrate + Nitrite	0.20	0.050	0.0050	mg/l	1	02/26/07 09:23	LN	EPA 353.2
Nitrogen, Nitrite	0.0030 U	0.050	0.0030	mg/l	1	02/22/07 12:22	LN	EPA 353.2
Specific Conductivity [a]	1410	0.50	0.50	umhos/cm	1	03/06/07	AFL	EPA 120.1
Sulfate	178	20	2.6	mg/l	2	03/06/07 18:00	EB	EPA 375.3
Sulfide	U	0.20		mg/l	1	02/24/07 10:00	LN	EPA 376.1
Total Organic Carbon	3.0	1.0	0.092	mg/l	1	02/26/07 07:46	LN	EPA 415.1/9060
pH	7.2			su	1	02/23/07 08:15	EB	EPA 150.1/9040

(a) Analysis performed at Accutest Laboratories, Orlando, FL.
(b) Calculated as: (Nitrogen, Nitrate + Nitrite) - (Nitrogen, Nitrite)

RL = Reporting Limit
MDL = Method Detection Limit

U = Indicates a result < MDL
B = Indicates a result >= MDL but < RL

Accutest Laboratories

Report of Analysis

Client Sample ID:	47WW14-FEB2007-FD		
Lab Sample ID:	T16411-7	Date Sampled:	02/20/07
Matrix:	AQ - Ground Water	Date Received:	02/22/07
Method:	SW846 8260B	Percent Solids:	n/a
Project:	Longhorn Army Ammunition Plant		

	File ID	DF	Analyzed	By	Prep Date	Prep Batch	Analytical Batch
Run #1	F0079060.D	1	03/03/07	RR	n/a	n/a	VF2309
Run #2	F0079061.D	50	03/03/07	RR	n/a	n/a	VF2309

	Purge Volume
Run #1	5.0 ml
Run #2	5.0 ml

VOA TCL List

CAS No.	Compound	Result	RL	MDL	Units	Q
67-64-1	Acetone	2.8 U	50	2.8	ug/l	
71-43-2	Benzene	0.23 U	2.0	0.23	ug/l	
75-27-4	Bromodichloromethane	0.33 U	2.0	0.33	ug/l	
75-25-2	Bromoform	0.65 U	2.0	0.65	ug/l	
108-90-7	Chlorobenzene	0.54 U	2.0	0.54	ug/l	
75-00-3	Chloroethane	0.46 U	2.0	0.46	ug/l	
67-66-3	Chloroform	0.66 U	2.0	0.66	ug/l	
75-15-0	Carbon disulfide	0.62 U	2.0	0.62	ug/l	
56-23-5	Carbon tetrachloride	0.52 U	2.0	0.52	ug/l	
75-34-3	1,1-Dichloroethane	2.0	2.0	0.52	ug/l	
75-35-4	1,1-Dichloroethylene	3.2	2.0	0.68	ug/l	
107-06-2	1,2-Dichloroethane	0.53 U	2.0	0.53	ug/l	
78-87-5	1,2-Dichloropropane	0.59 U	2.0	0.59	ug/l	
124-48-1	Dibromochloromethane	0.68 U	2.0	0.68	ug/l	
156-59-2	cis-1,2-Dichloroethylene	359 [a]	100	42	ug/l	
10061-01-5	cis-1,3-Dichloropropene	0.59 U	2.0	0.59	ug/l	
156-60-5	trans-1,2-Dichloroethylene	24.4	2.0	0.75	ug/l	
10061-02-6	trans-1,3-Dichloropropene	0.61 U	2.0	0.61	ug/l	
100-41-4	Ethylbenzene	0.48 U	2.0	0.48	ug/l	
591-78-6	2-Hexanone	1.9 U	10	1.9	ug/l	
108-10-1	4-Methyl-2-pentanone	7.3 U	10	7.3	ug/l	
74-83-9	Methyl bromide	0.47 U	2.0	0.47	ug/l	
74-87-3	Methyl chloride	0.60 U	2.0	0.60	ug/l	
75-09-2	Methylene chloride	0.67 U	5.0	0.67	ug/l	
78-93-3	Methyl ethyl ketone	3.0 U	10	3.0	ug/l	
100-42-5	Styrene	0.50 U	2.0	0.50	ug/l	
71-55-6	1,1,1-Trichloroethane	0.37 U	2.0	0.37	ug/l	
79-34-5	1,1,2,2-Tetrachloroethane	0.46 U	2.0	0.46	ug/l	
79-00-5	1,1,2-Trichloroethane	0.66 U	2.0	0.66	ug/l	
127-18-4	Tetrachloroethylene	0.74 U	2.0	0.74	ug/l	
108-88-3	Toluene	0.54 U	2.0	0.54	ug/l	
79-01-6	Trichloroethylene	378 [a]	100	32	ug/l	

U = Not detected MDL - Method Detection Limit J = Indicates an estimated value
RL = Reporting Limit B = Indicates analyte found in associated method blank
E = Indicates value exceeds calibration range N = Indicates presumptive evidence of a compound

Accutest Laboratories

Report of Analysis

Client Sample ID:	47WW14-FEB2007-FD		
Lab Sample ID:	T16411-7	Date Sampled:	02/20/07
Matrix:	AQ - Ground Water	Date Received:	02/22/07
Method:	SW846 8260B	Percent Solids:	n/a
Project:	Longhorn Army Ammunition Plant		

VOA TCL List

CAS No.	Compound	Result	RL	MDL	Units	Q
75-01-4	Vinyl chloride	20.5	2.0	0.32	ug/l	
1330-20-7	Xylene (total)	1.1 U	6.0	1.1	ug/l	

CAS No.	Surrogate Recoveries	Run# 1	Run# 2	Limits
1868-53-7	Dibromofluoromethane	105%	107%	73-139%
17060-07-0	1,2-Dichloroethane-D4	90%	88%	66-139%
2037-26-5	Toluene-D8	108%	114%	77-148%
460-00-4	4-Bromofluorobenzene	128%	138%	84-150%

(a) Result is from Run# 2

U = Not detected MDL - Method Detection Limit
RL = Reporting Limit
E = Indicates value exceeds calibration range

J = Indicates an estimated value
B = Indicates analyte found in associated method blank
N = Indicates presumptive evidence of a compound

Accutest Laboratories

Report of Analysis

Client Sample ID:	47WW14-FEB2007-FD		
Lab Sample ID:	T16411-7	Date Sampled:	02/20/07
Matrix:	AQ - Ground Water	Date Received:	02/22/07
Method:	RSKSOP-147/175	Percent Solids:	n/a
Project:	Longhorn Army Ammunition Plant		

	File ID	DF	Analyzed	By	Prep Date	Prep Batch	Analytical Batch
Run #1 [a]	XY025242.D	1	02/26/07	AFL	n/a	n/a	F:GXY991
Run #2							

CAS No.	Compound	Result	RL	MDL	Units	Q
74-82-8	Methane	42.7	0.50	0.30	ug/l	
74-84-0	Ethane	0.60 U	1.0	0.60	ug/l	
74-85-1	Ethene	0.80 U	1.0	0.80	ug/l	

(a) Analysis performed at Accutest Laboratories, Orlando, FL.

U = Not detected MDL - Method Detection Limit
RL = Reporting Limit
E = Indicates value exceeds calibration range
J = Indicates an estimated value
B = Indicates analyte found in associated method blank
N = Indicates presumptive evidence of a compound

Accutest Laboratories

Report of Analysis

3.7 3

Client Sample ID:	47WW14-FEB2007-FD		
Lab Sample ID:	T16411-7	Date Sampled:	02/20/07
Matrix:	AQ - Ground Water	Date Received:	02/22/07
		Percent Solids:	n/a
Project:	Longhorn Army Ammunition Plant		

General Chemistry

Analyte	Result	RL	MDL	Units	DF	Analyzed	By	Method
Perchlorate by IC								
Perchlorate [a]	4.0 U	10	4.0	ug/l	1	03/01/07 18:02	AFL	EPA 314
Alkalinity, Total as CaCO3	258	5.0	0.30	mg/l	1	03/03/07 08:15	EB	EPA 310.1
Carbon Dioxide	26.0	5.0		mg/l	1	03/06/07	RM	SM18 4500CO2D
Chloride	200	1.0	0.57	mg/l	1	03/02/07 12:30	EB	EPA 325.3
Nitrogen, Nitrate [b]	0.20	0.10	0.0050	mg/l	1	02/26/07 09:23	LN	SM18 4500NO3E/NO2B
Nitrogen, Nitrate + Nitrite	0.20	0.050	0.0050	mg/l	1	02/26/07 09:23	LN	EPA 353.2
Nitrogen, Nitrite	0.0030 U	0.050	0.0030	mg/l	1	02/22/07 12:22	LN	EPA 353.2
Specific Conductivity [a]	1460	0.50	0.50	umhos/cm	1	03/06/07	AFL	EPA 120.1
Sulfate	160	20	2.6	mg/l	2	03/06/07 18:00	EB	EPA 375.3
Sulfide	U	0.20		mg/l	1	02/24/07 10:00	LN	EPA 376.1
Total Organic Carbon	2.0	1.0	0.092	mg/l	1	02/26/07 07:46	LN	EPA 415.1/9060
pH	7.3			su	1	02/23/07 08:15	EB	EPA 150.1/9040

(a) Analysis performed at Accutest Laboratories, Orlando, FL.
(b) Calculated as: (Nitrogen, Nitrate + Nitrite) - (Nitrogen, Nitrite)

RL = Reporting Limit
MDL = Method Detection Limit

U = Indicates a result < MDL
B = Indicates a result > = MDL but < RL

Accutest Laboratories

Report of Analysis

Client Sample ID:	47WW13-FEB2007		
Lab Sample ID:	T16411-8	Date Sampled:	02/20/07
Matrix:	AQ - Ground Water	Date Received:	02/22/07
Method:	SW846 8260B	Percent Solids:	n/a
Project:	Longhorn Army Ammunition Plant		

	File ID	DF	Analyzed	By	Prep Date	Prep Batch	Analytical Batch
Run #1	F0079035.D	1	03/02/07	LJ	n/a	n/a	VF2307
Run #2	F0079109.D	50	03/05/07	LJ	n/a	n/a	VF2311

	Purge Volume
Run #1	5.0 ml
Run #2	5.0 ml

VOA TCL List

CAS No.	Compound	Result	RL	MDL	Units	Q
67-64-1	Acetone	2.8 U	50	2.8	ug/l	
71-43-2	Benzene	0.37	2.0	0.23	ug/l	J
75-27-4	Bromodichloromethane	0.33 U	2.0	0.33	ug/l	
75-25-2	Bromoform	0.65 U	2.0	0.65	ug/l	
108-90-7	Chlorobenzene	0.54 U	2.0	0.54	ug/l	
75-00-3	Chloroethane	0.46 U	2.0	0.46	ug/l	
67-66-3	Chloroform	0.66 U	2.0	0.66	ug/l	
75-15-0	Carbon disulfide	0.62 U	2.0	0.62	ug/l	
56-23-5	Carbon tetrachloride	0.52 U	2.0	0.52	ug/l	
75-34-3	1,1-Dichloroethane	3.4	2.0	0.52	ug/l	
75-35-4	1,1-Dichloroethylene	4.2	2.0	0.68	ug/l	
107-06-2	1,2-Dichloroethane	0.53 U	2.0	0.53	ug/l	
78-87-5	1,2-Dichloropropane	0.59 U	2.0	0.59	ug/l	
124-48-1	Dibromochloromethane	0.68 U	2.0	0.68	ug/l	
156-59-2	cis-1,2-Dichloroethylene	1160 [a]	100	42	ug/l	
10061-01-5	cis-1,3-Dichloropropene	0.59 U	2.0	0.59	ug/l	
156-60-5	trans-1,2-Dichloroethylene	14.5	2.0	0.75	ug/l	
10061-02-6	trans-1,3-Dichloropropene	0.61 U	2.0	0.61	ug/l	
100-41-4	Ethylbenzene	0.48 U	2.0	0.48	ug/l	
591-78-6	2-Hexanone	1.9 U	10	1.9	ug/l	
108-10-1	4-Methyl-2-pentanone	7.3 U	10	7.3	ug/l	
74-83-9	Methyl bromide	0.47 U	2.0	0.47	ug/l	
74-87-3	Methyl chloride	0.60 U	2.0	0.60	ug/l	
75-09-2	Methylene chloride	0.67 U	5.0	0.67	ug/l	
78-93-3	Methyl ethyl ketone	3.0 U	10	3.0	ug/l	
100-42-5	Styrene	0.50 U	2.0	0.50	ug/l	
71-55-6	1,1,1-Trichloroethane	0.37 U	2.0	0.37	ug/l	
79-34-5	1,1,2,2-Tetrachloroethane	0.46 U	2.0	0.46	ug/l	
79-00-5	1,1,2-Trichloroethane	0.66 U	2.0	0.66	ug/l	
127-18-4	Tetrachloroethylene	0.74 U	2.0	0.74	ug/l	
108-88-3	Toluene	0.54 U	2.0	0.54	ug/l	
79-01-6	Trichloroethylene	565 [a]	100	32	ug/l	

U = Not detected MDL - Method Detection Limit J = Indicates an estimated value
RL = Reporting Limit B = Indicates analyte found in associated method blank
E = Indicates value exceeds calibration range N = Indicates presumptive evidence of a compound

Accutest Laboratories

Report of Analysis

Client Sample ID:	47WW13-FEB2007		
Lab Sample ID:	T16411-8	Date Sampled:	02/20/07
Matrix:	AQ - Ground Water	Date Received:	02/22/07
Method:	SW846 8260B	Percent Solids:	n/a
Project:	Longhorn Army Ammunition Plant		

VOA TCL List

CAS No.	Compound	Result	RL	MDL	Units	Q
75-01-4	Vinyl chloride	36.0	2.0	0.32	ug/l	
1330-20-7	Xylene (total)	1.1 U	6.0	1.1	ug/l	

CAS No.	Surrogate Recoveries	Run# 1	Run# 2	Limits
1868-53-7	Dibromofluoromethane	99%	104%	73-139%
17060-07-0	1,2-Dichloroethane-D4	85%	102%	66-139%
2037-26-5	Toluene-D8	107%	105%	77-148%
460-00-4	4-Bromofluorobenzene	136%	112%	84-150%

(a) Result is from Run# 2

U = Not detected MDL - Method Detection Limit
RL = Reporting Limit
E = Indicates value exceeds calibration range

J = Indicates an estimated value
B = Indicates analyte found in associated method blank
N = Indicates presumptive evidence of a compound

Accutest Laboratories

Report of Analysis

Client Sample ID:	47WW13-FEB2007		
Lab Sample ID:	T16411-8	Date Sampled:	02/20/07
Matrix:	AQ - Ground Water	Date Received:	02/22/07
Method:	RSKSOP-147/175	Percent Solids:	n/a
Project:	Longhorn Army Ammunition Plant		

	File ID	DF	Analyzed	By	Prep Date	Prep Batch	Analytical Batch
Run #1 [a]	XY025243.D	1	02/26/07	AFL	n/a	n/a	F:GXY991
Run #2							

CAS No.	Compound	Result	RL	MDL	Units	Q
74-82-8	Methane	20.6	0.50	0.30	ug/l	
74-84-0	Ethane	0.60 U	1.0	0.60	ug/l	
74-85-1	Ethene	0.80 U	1.0	0.80	ug/l	

(a) Analysis performed at Accutest Laboratories, Orlando, FL.

U = Not detected MDL - Method Detection Limit
RL = Reporting Limit
E = Indicates value exceeds calibration range

J = Indicates an estimated value
B = Indicates analyte found in associated method blank
N = Indicates presumptive evidence of a compound

Accutest Laboratories

Report of Analysis

3.8

Client Sample ID:	47WW13-FEB2007		
Lab Sample ID:	T16411-8	Date Sampled:	02/20/07
Matrix:	AQ - Ground Water	Date Received:	02/22/07
		Percent Solids:	n/a
Project:	Longhorn Army Ammunition Plant		

General Chemistry

Analyte	Result	RL	MDL	Units	DF	Analyzed	By	Method
Perchlorate by IC								
Perchlorate [a]	4.0 U	10	4.0	ug/l	1	03/01/07 18:16	AFL	EPA 314
Alkalinity, Total as CaCO3	67.0	5.0	0.30	mg/l	1	03/03/07 08:15	EB	EPA 310.1
Carbon Dioxide	110	5.0		mg/l	1	03/06/07	RM	SM18 4500CO2D
Chloride	13.0	1.0	0.57	mg/l	1	03/02/07 12:30	EB	EPA 325.3
Nitrogen, Nitrate [b]	0.98	0.30	0.0050	mg/l	1	02/26/07 09:23	LN	SM18 4500NO3E/NO2B
Nitrogen, Nitrate + Nitrite	1.0	0.20	0.0050	mg/l	4	02/26/07 09:23	LN	EPA 353.2
Nitrogen, Nitrite	0.020 B	0.10	0.0030	mg/l	2	02/22/07 12:22	LN	EPA 353.2
Specific Conductivity [a]	143	0.50	0.50	umhos/cm	1	03/06/07	AFL	EPA 120.1
Sulfate	1440	1000	2.6	mg/l	100	03/06/07 18:00	EB	EPA 375.3
Sulfide	U	0.20		mg/l	1	02/24/07 10:00	LN	EPA 376.1
Total Organic Carbon	5.0	1.0	0.092	mg/l	1	02/27/07 09:10	LN	EPA 415.1/9060
pH	6.1			su	1	02/23/07 08:15	EB	EPA 150.1/9040

(a) Analysis performed at Accutest Laboratories, Orlando, FL.
(b) Calculated as: (Nitrogen, Nitrate + Nitrite) - (Nitrogen, Nitrite)

RL = Reporting Limit
MDL = Method Detection Limit

U = Indicates a result < MDL
B = Indicates a result >= MDL but < RL

Accutest Laboratories

Report of Analysis

Client Sample ID:	LHSMW04-FEB2007		
Lab Sample ID:	T16411-9	Date Sampled:	02/20/07
Matrix:	AQ - Ground Water	Date Received:	02/22/07
Method:	SW846 8260B	Percent Solids:	n/a
Project:	Longhorn Army Ammunition Plant		

	File ID	DF	Analyzed	By	Prep Date	Prep Batch	Analytical Batch
Run #1	F0079063.D	1	03/03/07	RR	n/a	n/a	VF2309
Run #2							

	Purge Volume
Run #1	5.0 ml
Run #2	

VOA TCL List

CAS No.	Compound	Result	RL	MDL	Units	Q
67-64-1	Acetone	2.8 U	50	2.8	ug/l	
71-43-2	Benzene	0.23 U	2.0	0.23	ug/l	
75-27-4	Bromodichloromethane	0.33 U	2.0	0.33	ug/l	
75-25-2	Bromoform	0.65 U	2.0	0.65	ug/l	
108-90-7	Chlorobenzene	0.54 U	2.0	0.54	ug/l	
75-00-3	Chloroethane	0.46 U	2.0	0.46	ug/l	
67-66-3	Chloroform	0.66 U	2.0	0.66	ug/l	
75-15-0	Carbon disulfide	0.62 U	2.0	0.62	ug/l	
56-23-5	Carbon tetrachloride	0.52 U	2.0	0.52	ug/l	
75-34-3	1,1-Dichloroethane	0.60	2.0	0.52	ug/l	J
75-35-4	1,1-Dichloroethylene	0.68 U	2.0	0.68	ug/l	
107-06-2	1,2-Dichloroethane	0.53 U	2.0	0.53	ug/l	
78-87-5	1,2-Dichloropropane	0.59 U	2.0	0.59	ug/l	
124-48-1	Dibromochloromethane	0.68 U	2.0	0.68	ug/l	
156-59-2	cis-1,2-Dichloroethylene	0.83 U	2.0	0.83	ug/l	
10061-01-5	cis-1,3-Dichloropropene	0.59 U	2.0	0.59	ug/l	
156-60-5	trans-1,2-Dichloroethylene	0.75 U	2.0	0.75	ug/l	
10061-02-6	trans-1,3-Dichloropropene	0.61 U	2.0	0.61	ug/l	
100-41-4	Ethylbenzene	0.48 U	2.0	0.48	ug/l	
591-78-6	2-Hexanone	1.9 U	10	1.9	ug/l	
108-10-1	4-Methyl-2-pentanone	7.3 U	10	7.3	ug/l	
74-83-9	Methyl bromide	0.47 U	2.0	0.47	ug/l	
74-87-3	Methyl chloride	0.60 U	2.0	0.60	ug/l	
75-09-2	Methylene chloride	0.67 U	5.0	0.67	ug/l	
78-93-3	Methyl ethyl ketone	3.0 U	10	3.0	ug/l	
100-42-5	Styrene	0.50 U	2.0	0.50	ug/l	
71-55-6	1,1,1-Trichloroethane	0.37 U	2.0	0.37	ug/l	
79-34-5	1,1,2,2-Tetrachloroethane	0.46 U	2.0	0.46	ug/l	
79-00-5	1,1,2-Trichloroethane	0.66 U	2.0	0.66	ug/l	
127-18-4	Tetrachloroethylene	6.4	2.0	0.74	ug/l	
108-88-3	Toluene	0.54 U	2.0	0.54	ug/l	
79-01-6	Trichloroethylene	4.6	2.0	0.63	ug/l	

U = Not detected MDL - Method Detection Limit
RL = Reporting Limit
E = Indicates value exceeds calibration range

J = Indicates an estimated value
B = Indicates analyte found in associated method blank
N = Indicates presumptive evidence of a compound

Accutest Laboratories

Report of Analysis

Client Sample ID:	LHSMW04-FEB2007		
Lab Sample ID:	T16411-9	Date Sampled:	02/20/07
Matrix:	AQ - Ground Water	Date Received:	02/22/07
Method:	SW846 8260B	Percent Solids:	n/a
Project:	Longhorn Army Ammunition Plant		

VOA TCL List

CAS No.	Compound	Result	RL	MDL	Units	Q
75-01-4	Vinyl chloride	0.32 U	2.0	0.32	ug/l	
1330-20-7	Xylene (total)	1.1 U	6.0	1.1	ug/l	

CAS No.	Surrogate Recoveries	Run# 1	Run# 2	Limits
1868-53-7	Dibromofluoromethane	108%		73-139%
17060-07-0	1,2-Dichloroethane-D4	91%		66-139%
2037-26-5	Toluene-D8	116%		77-148%
460-00-4	4-Bromofluorobenzene	145%		84-150%

U = Not detected MDL - Method Detection Limit
RL = Reporting Limit
E = Indicates value exceeds calibration range

J = Indicates an estimated value
B = Indicates analyte found in associated method blank
N = Indicates presumptive evidence of a compound

Accutest Laboratories

Report of Analysis

Client Sample ID:	LHSMW04-FEB2007		
Lab Sample ID:	T16411-9	Date Sampled:	02/20/07
Matrix:	AQ - Ground Water	Date Received:	02/22/07
Method:	RSKSOP-147/175	Percent Solids:	n/a
Project:	Longhorn Army Ammunition Plant		

	File ID	DF	Analyzed	By	Prep Date	Prep Batch	Analytical Batch
Run #1 [a]	XY025244.D	1	02/26/07	AFL	n/a	n/a	F:GXY991
Run #2							

CAS No.	Compound	Result	RL	MDL	Units	Q
74-82-8	Methane	7.75	0.50	0.30	ug/l	
74-84-0	Ethane	0.60 U	1.0	0.60	ug/l	
74-85-1	Ethene	0.80 U	1.0	0.80	ug/l	

(a) Analysis performed at Accutest Laboratories, Orlando, FL.

U = Not detected MDL - Method Detection Limit
RL = Reporting Limit
E = Indicates value exceeds calibration range

J = Indicates an estimated value
B = Indicates analyte found in associated method blank
N = Indicates presumptive evidence of a compound

Accutest Laboratories

Report of Analysis

Client Sample ID:	LHSMW04-FEB2007		
Lab Sample ID:	T16411-9	Date Sampled:	02/20/07
Matrix:	AQ - Ground Water	Date Received:	02/22/07
		Percent Solids:	n/a
Project:	Longhorn Army Ammunition Plant		

General Chemistry

Analyte	Result	RL	MDL	Units	DF	Analyzed	By	Method
Perchlorate by IC								
Perchlorate [a]	4.0 U	10	4.0	ug/l	1	03/01/07 18:30	AFL	EPA 314
Alkalinity, Total as CaCO3	54	5.0	0.30	mg/l	1	03/03/07 08:15	EB	EPA 310.1
Carbon Dioxide	170	5.0		mg/l	1	03/06/07	RM	SM18 4500CO2D
Chloride	1530	1.0	0.57	mg/l	1	03/02/07 12:30	EB	EPA 325.3
Nitrogen, Nitrate [b]	<0.10	0.10	0.0050	mg/l	1	02/26/07 09:23	LN	SM18 4500NO3E/NO2B
Nitrogen, Nitrate + Nitrite	0.020 B	0.050	0.0050	mg/l	1	02/26/07 09:23	LN	EPA 353.2
Nitrogen, Nitrite	0.0030 U	0.050	0.0030	mg/l	1	02/22/07 12:22	LN	EPA 353.2
Specific Conductivity [a]	5530	0.50	0.50	umhos/cm	1	03/06/07	AFL	EPA 120.1
Sulfate	316	40	2.6	mg/l	4	03/06/07 18:00	EB	EPA 375.3
Sulfide	U	0.20		mg/l	1	02/24/07 10:00	LN	EPA 376.1
Total Organic Carbon	11.0	1.0	0.092	mg/l	1	02/27/07 09:10	LN	EPA 415.1/9060
pH	5.8			su	1	02/23/07 08:15	EB	EPA 150.1/9040

(a) Analysis performed at Accutest Laboratories, Orlando, FL.
(b) Calculated as: (Nitrogen, Nitrate + Nitrite) - (Nitrogen, Nitrite)

RL = Reporting Limit
MDL = Method Detection Limit

U = Indicates a result < MDL
B = Indicates a result >= MDL but < RL

Accutest Laboratories

Report of Analysis

Client Sample ID:	LHSMW18-FEB2007		
Lab Sample ID:	T16411-10	Date Sampled:	02/20/07
Matrix:	AQ - Ground Water	Date Received:	02/22/07
Method:	SW846 8260B	Percent Solids:	n/a
Project:	Longhorn Army Ammunition Plant		

	File ID	DF	Analyzed	By	Prep Date	Prep Batch	Analytical Batch
Run #1	F0079014.D	1	03/01/07	LJ	n/a	n/a	VF2306
Run #2							

	Purge Volume
Run #1	5.0 ml
Run #2	

VOA TCL List

CAS No.	Compound	Result	RL	MDL	Units	Q
67-64-1	Acetone	2.8 U	50	2.8	ug/l	
71-43-2	Benzene	0.23 U	2.0	0.23	ug/l	
75-27-4	Bromodichloromethane	0.33 U	2.0	0.33	ug/l	
75-25-2	Bromoform	0.65 U	2.0	0.65	ug/l	
108-90-7	Chlorobenzene	0.54 U	2.0	0.54	ug/l	
75-00-3	Chloroethane	0.46 U	2.0	0.46	ug/l	
67-66-3	Chloroform	0.66 U	2.0	0.66	ug/l	
75-15-0	Carbon disulfide	0.62 U	2.0	0.62	ug/l	
56-23-5	Carbon tetrachloride	0.52 U	2.0	0.52	ug/l	
75-34-3	1,1-Dichloroethane	0.52 U	2.0	0.52	ug/l	
75-35-4	1,1-Dichloroethylene	0.68 U	2.0	0.68	ug/l	
107-06-2	1,2-Dichloroethane	0.53 U	2.0	0.53	ug/l	
78-87-5	1,2-Dichloropropane	0.59 U	2.0	0.59	ug/l	
124-48-1	Dibromochloromethane	0.68 U	2.0	0.68	ug/l	
156-59-2	cis-1,2-Dichloroethylene	1.5	2.0	0.83	ug/l	J
10061-01-5	cis-1,3-Dichloropropene	0.59 U	2.0	0.59	ug/l	
156-60-5	trans-1,2-Dichloroethylene	0.75 U	2.0	0.75	ug/l	
10061-02-6	trans-1,3-Dichloropropene	0.61 U	2.0	0.61	ug/l	
100-41-4	Ethylbenzene	0.48 U	2.0	0.48	ug/l	
591-78-6	2-Hexanone	1.9 U	10	1.9	ug/l	
108-10-1	4-Methyl-2-pentanone	7.3 U	10	7.3	ug/l	
74-83-9	Methyl bromide	0.47 U	2.0	0.47	ug/l	
74-87-3	Methyl chloride	0.60 U	2.0	0.60	ug/l	
75-09-2	Methylene chloride	0.67 U	5.0	0.67	ug/l	
78-93-3	Methyl ethyl ketone	3.0 U	10	3.0	ug/l	
100-42-5	Styrene	0.50 U	2.0	0.50	ug/l	
71-55-6	1,1,1-Trichloroethane	0.37 U	2.0	0.37	ug/l	
79-34-5	1,1,2,2-Tetrachloroethane	0.46 U	2.0	0.46	ug/l	
79-00-5	1,1,2-Trichloroethane	0.66 U	2.0	0.66	ug/l	
127-18-4	Tetrachloroethylene	0.74 U	2.0	0.74	ug/l	
108-88-3	Toluene	0.54 U	2.0	0.54	ug/l	
79-01-6	Trichloroethylene	4.8	2.0	0.63	ug/l	

U = Not detected MDL - Method Detection Limit
RL = Reporting Limit
E = Indicates value exceeds calibration range

J = Indicates an estimated value
B = Indicates analyte found in associated method blank
N = Indicates presumptive evidence of a compound

Accutest Laboratories

Report of Analysis

Client Sample ID:	LHSMW18-FEB2007		
Lab Sample ID:	T16411-10	Date Sampled:	02/20/07
Matrix:	AQ - Ground Water	Date Received:	02/22/07
Method:	SW846 8260B	Percent Solids:	n/a
Project:	Longhorn Army Ammunition Plant		

VOA TCL List

CAS No.	Compound	Result	RL	MDL	Units	Q
75-01-4	Vinyl chloride	0.32 U	2.0	0.32	ug/l	
1330-20-7	Xylene (total)	1.1 U	6.0	1.1	ug/l	

CAS No.	Surrogate Recoveries	Run# 1	Run# 2	Limits
1868-53-7	Dibromofluoromethane	102%		73-139%
17060-07-0	1,2-Dichloroethane-D4	97%		66-139%
2037-26-5	Toluene-D8	107%		77-148%
460-00-4	4-Bromofluorobenzene	119%		84-150%

U = Not detected MDL - Method Detection Limit
RL = Reporting Limit
E = Indicates value exceeds calibration range

J = Indicates an estimated value
B = Indicates analyte found in associated method blank
N = Indicates presumptive evidence of a compound

Accutest Laboratories

Report of Analysis

Client Sample ID:	LHSMW18-FEB2007		
Lab Sample ID:	T16411-10	Date Sampled:	02/20/07
Matrix:	AQ - Ground Water	Date Received:	02/22/07
Method:	RSKSOP-147/175	Percent Solids:	n/a
Project:	Longhorn Army Ammunition Plant		

	File ID	DF	Analyzed	By	Prep Date	Prep Batch	Analytical Batch
Run #1 [a]	XY025246.D	1	02/26/07	AFL	n/a	n/a	F:GXY991
Run #2							

CAS No.	Compound	Result	RL	MDL	Units	Q
74-82-8	Methane	0.30 U	0.50	0.30	ug/l	
74-84-0	Ethane	0.60 U	1.0	0.60	ug/l	
74-85-1	Ethene	0.80 U	1.0	0.80	ug/l	

(a) Analysis performed at Accutest Laboratories, Orlando, FL.

U = Not detected MDL - Method Detection Limit
RL = Reporting Limit
E = Indicates value exceeds calibration range

J = Indicates an estimated value
B = Indicates analyte found in associated method blank
N = Indicates presumptive evidence of a compound

Accutest Laboratories

Report of Analysis

Client Sample ID:	LHSMW18-FEB2007		
Lab Sample ID:	T16411-10	Date Sampled:	02/20/07
Matrix:	AQ - Ground Water	Date Received:	02/22/07
		Percent Solids:	n/a
Project:	Longhorn Army Ammunition Plant		

General Chemistry

Analyte	Result	RL	MDL	Units	DF	Analyzed	By	Method
Perchlorate by IC								
Perchlorate [a]	4.0 U	10	4.0	ug/l	1	03/01/07 18:45	AFL	EPA 314
Alkalinity, Total as CaCO3	158	5.0	0.30	mg/l	1	03/03/07 08:15	EB	EPA 310.1
Carbon Dioxide	100	5.0		mg/l	1	03/06/07	RM	SM18 4500CO2D
Chloride	410	1.0	0.57	mg/l	1	03/02/07 12:30	EB	EPA 325.3
Nitrogen, Nitrate [b]	0.19	0.10	0.0050	mg/l	1	02/26/07 09:23	LN	SM18 4500NO3E/NO2B
Nitrogen, Nitrate + Nitrite	0.20	0.050	0.0050	mg/l	1	02/26/07 09:23	LN	EPA 353.2
Nitrogen, Nitrite	0.010 B	0.050	0.0030	mg/l	1	02/22/07 12:22	LN	EPA 353.2
Specific Conductivity [a]	3300	0.50	0.50	umhos/cm	1	03/06/07	AFL	EPA 120.1
Sulfate	1260	100	2.6	mg/l	10	03/06/07 18:00	EB	EPA 375.3
Sulfide	U	0.20		mg/l	1	02/24/07 10:00	LN	EPA 376.1
Total Organic Carbon	18.0	1.0	0.092	mg/l	1	02/26/07 07:46	LN	EPA 415.1/9060
pH	6.5			su	1	02/23/07 08:15	EB	EPA 150.1/9040

(a) Analysis performed at Accutest Laboratories, Orlando, FL.
(b) Calculated as: (Nitrogen, Nitrate + Nitrite) - (Nitrogen, Nitrite)

RL = Reporting Limit
MDL = Method Detection Limit

U = Indicates a result < MDL
B = Indicates a result >= MDL but < RL

Accutest Laboratories

Report of Analysis

3.11 3

Client Sample ID:	TRIP BLANK		
Lab Sample ID:	T16411-11	Date Sampled:	02/20/07
Matrix:	AQ - Trip Blank Water	Date Received:	02/22/07
Method:	SW846 8260B	Percent Solids:	n/a
Project:	Longhorn Army Ammunition Plant		

	File ID	DF	Analyzed	By	Prep Date	Prep Batch	Analytical Batch
Run #1	F0079059.D	1	03/03/07	RR	n/a	n/a	VF2309
Run #2							

	Purge Volume
Run #1	5.0 ml
Run #2	

VOA TCL List

CAS No.	Compound	Result	RL	MDL	Units	Q
67-64-1	Acetone	2.8 U	50	2.8	ug/l	
71-43-2	Benzene	0.23 U	2.0	0.23	ug/l	
75-27-4	Bromodichloromethane	0.33 U	2.0	0.33	ug/l	
75-25-2	Bromoform	0.65 U	2.0	0.65	ug/l	
108-90-7	Chlorobenzene	0.54 U	2.0	0.54	ug/l	
75-00-3	Chloroethane	0.46 U	2.0	0.46	ug/l	
67-66-3	Chloroform	0.66 U	2.0	0.66	ug/l	
75-15-0	Carbon disulfide	0.62 U	2.0	0.62	ug/l	
56-23-5	Carbon tetrachloride	0.52 U	2.0	0.52	ug/l	
75-34-3	1,1-Dichloroethane	0.52 U	2.0	0.52	ug/l	
75-35-4	1,1-Dichloroethylene	0.68 U	2.0	0.68	ug/l	
107-06-2	1,2-Dichloroethane	0.53 U	2.0	0.53	ug/l	
78-87-5	1,2-Dichloropropane	0.59 U	2.0	0.59	ug/l	
124-48-1	Dibromochloromethane	0.68 U	2.0	0.68	ug/l	
156-59-2	cis-1,2-Dichloroethylene	0.83 U	2.0	0.83	ug/l	
10061-01-5	cis-1,3-Dichloropropene	0.59 U	2.0	0.59	ug/l	
156-60-5	trans-1,2-Dichloroethylene	0.75 U	2.0	0.75	ug/l	
10061-02-6	trans-1,3-Dichloropropene	0.61 U	2.0	0.61	ug/l	
100-41-4	Ethylbenzene	0.48 U	2.0	0.48	ug/l	
591-78-6	2-Hexanone	1.9 U	10	1.9	ug/l	
108-10-1	4-Methyl-2-pentanone	7.3 U	10	7.3	ug/l	
74-83-9	Methyl bromide	0.47 U	2.0	0.47	ug/l	
74-87-3	Methyl chloride	0.60 U	2.0	0.60	ug/l	
75-09-2	Methylene chloride	0.67 U	5.0	0.67	ug/l	
78-93-3	Methyl ethyl ketone	3.0 U	10	3.0	ug/l	
100-42-5	Styrene	0.50 U	2.0	0.50	ug/l	
71-55-6	1,1,1-Trichloroethane	0.37 U	2.0	0.37	ug/l	
79-34-5	1,1,2,2-Tetrachloroethane	0.46 U	2.0	0.46	ug/l	
79-00-5	1,1,2-Trichloroethane	0.66 U	2.0	0.66	ug/l	
127-18-4	Tetrachloroethylene	0.74 U	2.0	0.74	ug/l	
108-88-3	Toluene	0.54 U	2.0	0.54	ug/l	
79-01-6	Trichloroethylene	0.63 U	2.0	0.63	ug/l	

U = Not detected MDL - Method Detection Limit
RL = Reporting Limit
E = Indicates value exceeds calibration range

J = Indicates an estimated value
B = Indicates analyte found in associated method blank
N = Indicates presumptive evidence of a compound

Accutest Laboratories

Report of Analysis

Client Sample ID:	TRIP BLANK		
Lab Sample ID:	T16411-11	Date Sampled:	02/20/07
Matrix:	AQ - Trip Blank Water	Date Received:	02/22/07
Method:	SW846 8260B	Percent Solids:	n/a
Project:	Longhorn Army Ammunition Plant		

VOA TCL List

CAS No.	Compound	Result	RL	MDL	Units	Q
75-01-4	Vinyl chloride	0.32 U	2.0	0.32	ug/l	
1330-20-7	Xylene (total)	1.1 U	6.0	1.1	ug/l	

CAS No.	Surrogate Recoveries	Run# 1	Run# 2	Limits
1868-53-7	Dibromofluoromethane	104%		73-139%
17060-07-0	1,2-Dichloroethane-D4	89%		66-139%
2037-26-5	Toluene-D8	110%		77-148%
460-00-4	4-Bromofluorobenzene	134%		84-150%

U = Not detected MDL - Method Detection Limit
RL = Reporting Limit
E = Indicates value exceeds calibration range

J = Indicates an estimated value
B = Indicates analyte found in associated method blank
N = Indicates presumptive evidence of a compound

Misc. Forms

Custody Documents and Other Forms

Includes the following where applicable:

- Chain of Custody
- LRC Form

T16411

Team 3-02B

Shaw® Shaw Environmental, Inc.

3010 Briarpark Drive, Suite 4N
Houston, TX 77042 (713) 996-4400

CHAIN-OF-CUSTODY

No. 10931

Laboratory Name: Accutest Address: 10165 Harwin #150 Hou, TX 77036 Contact: Agnes (713) 271-4700

Project Name: LHAAP Project Location: Karnack, TX

Project No.: 117591 Project Contact: K. Everette Project Telephone No.: (713) 996 4421

Point of contact: D. Meyers Telephone No.: (713) 996-4408 Project Manager/Supervisor: P. Srivastav

Analysis and Method Desired (Indicate separate containers)

Item No.	Sample Number	Date	Time	Comp	Grab	Matrix	Sample Description, Location	Number of Containers	VOC 8260	Anion 300	Sulfides 376.2	Perchlorate 314	Gases 175	Alkalinity 310.1	TOC 415.1	Explosives 8330	Remarks
1	LHSMW22-Feb2007	2/20/07	8:50		X	W	Groundwater	13	✓	✓	✓	✓	✓	✓	✓		
2	17WW01-Feb2007	2/20/07	15:10		X	W	Groundwater	13	✓	✓	✓	✓	✓	✓	✓	✓	
3	17WW01-Feb 2007-FD	2/20/07	15:10		X	W	Groundwater	14	✓	✓	✓	✓	✓	✓	✓	✓	
4																	
5																	
6																	
7																	
8																	
9																	
10																	

Transfers Relinquished By (Signature)	Date/Time	Transfers Accepted By (Signature)	Date/Time
Susan Allen	02/20/07	Scott Beesinger	2-21-07 08:10
Scott Beesinger	2-21-07 08:30		

Special Instructions: Do Sample for Alkalinity in 17WW01-Feb2007. CO2 for all gases.

FedEx Airbill No.: 1246 7250 1925 9820 3

Laboratory: A. Rodriguez 2/21/07 9:05 Sampler's Signature: Susan Allen

TAT: X Standard ____ Rush Due: ____ Seals Intact? X Y ____ N Received Good Condition X Y ____ N ✓ Cold

White - Lab Copy Canary - Field Copy Pink - File Copy

4.1 4

T16411: Chain of Custody
Page 1 of 7

ACCUTEST Laboratories T16411

T16411

Shaw® Shaw Environmental, Inc.

3010 Briarpark Drive, Suite 4N
Houston, TX 77042 (713) 996-4400

CHAIN-OF-CUSTODY

No. 10949

Laboratory Name: Accutest
Address: 10165 Harwin Dr. #150 Houston, TX 77036
Contact: Agnes 713-271-4700

Project Name: Longhorn Army Ammunition Plant
Project Location: Karnack, TX
Project No.: 117591
Project Contact: Kay Everette
Project Telephone No.: 713-996-4421
Point of contact: Diane Meyer
Telephone No.: 713-996-4408
Project Manager/Supervisor: Praveen Srivastav

Analysis and Method Desired (Indicate separate containers)

Item No.	Sample Number	Date	Time	Comp	Grab	Matrix	Sample Description, Location	Number of Containers	VOC-8260B	Anions 300.0	376.2 Sulfides	314.0 Perchlorate	Gases CO2 - RSK SOP	310.1 Alkalinity	TOC 415.1	Remarks
4	LHSMW19-Feb2007	2/20/07	0950		✓	GW	GW-Site 46	3	✓							
4 1/2	LHSMW19-Feb2007	2/20/07	0950		✓	GW	GW-Site 46	3					✓			
4 1/3	LHSMW19-Feb2007	2/20/07	0950		✓	GW	GW-Site 46	3							✓	
4 4	LHSMW19-Feb2007	2/20/07	0950		✓	GW	GW-Site 46	1				✓				
4 5	LHSMW19-Feb2007	2/20/07	0950		✓	GW	GW-Site 46	1			✓					
4 6	LHSMW19-Feb2007	2/20/07	0950		✓	GW	GW-Site 46	1		✓						
4 7	LHSMW19-Feb2007	2/20/07	0951		✓	GW	GW-Site 46	1						✓		
8																
9																
10																

Transfers Relinquished By (Signature)	Date/Time	Transfers Accepted By (Signature)	Date/Time
Sherry M. Fabos	2-20-07 1630	Scott Beesinger	2/21/07 08:10
Scott Beesinger	2-21-07 08:30		
		Laboratory: J. Rodriguez	2/22/07 9:50

Special Instructions: UPS
FedEx Airbill No.: 1Z6V7250192598203
Sampler's Signature: Sherry M. Fabos

TAT: ____ Standard ____ Rush Due: ____ Seals Intact? ✓ Y ____ N Received Good Condition ✓ Y ____ N ✓ Cold

White - Lab Copy Canary - Field Copy Pink - File Copy

4.1 4

T16411: Chain of Custody
Page 2 of 7

T16411

Shaw® Shaw Environmental, Inc.

3010 Briarpark Drive, Suite 4N
Houston, TX 77042 (713) 996-4400

CHAIN-OF-CUSTODY

No. 10914

Laboratory Name: Accutest Address: 10165 Harwin Dr #150 Houston, TX 77036 Contact: Agnes - 713-271-4700

Project Name: Longhorn Army Ammunition Plant Project Location: Karnack, TX

Project No.: 117591 Project Contact: Ray Everette Project Telephone No.: 713-996-4421

Point of contact: Diane Meyer Telephone No.: 713-996-4408

Project Manager/Supervisor: Praveen Srivastav

Analysis and Method Desired (Indicate separate containers)

Item No.	Sample Number	Date	Time	Comp	Grab	Matrix	Sample Description, Location	Number of Containers	VOCs by 8260	Anions 300	Solids 160.2	Chlorides 175	Alkalinity 310.1	TOC 415.1	Perchlorate 314.0	Remarks
5	46WW02-FEB 2007	2/20/07	0934		X	W	46WW02	13	X	X	X	X	X	X	X	
6	47WW14-FEB 2007	2/20/07	1223		X	W	47WW14	13	X	X	X	X	X	X	X	
7	47WW14FEB2007-FD	2/20/07	1220		X	W	47WW14-FD	13	X	X	X	X	X	X	X	
8	47WW13 FEB 2007	2/20/07	1554		X	W	47WW13	13	X	X	X	X	X	X	X	
9																
10																

2/20/07 JRB

Transfers Relinquished By (Signature)	Date/Time	Transfers Accepted By (Signature)	Date/Time
J Rhs	2/20/07 @ 1800	Scott Beesinger	2-21-07 08:10
Scott Beesinger	2-21-07 08:30		

Special Instructions: HB

Fedex Airbill No.: 1266V725019259820 3

Laboratory: A. Rodriguez 2/21/07 0930 Sampler's Signature

TAT: X Standard ___ Rush Due: ___ Seals Intact? ✓ Y ___ N Received Good Condition ✓ Y ___ N ✓ Cold

White - Lab Copy Canary - Field Copy Pink - File Copy

T16411

Shaw® Shaw Environmental, Inc.

3010 Briarpark Drive, Suite 4N
Houston, TX 77042 (713) 996-4400

CHAIN-OF-CUSTODY

No. 10948

Laboratory Name: Accutest
Address: 10165 Harwin Dr. #150 Houston, TX 77036
Contact: Agnes 713-271-4700

Project Name: Longhorn Army Ammunition Plant
Project Location: Karnack, TX
Project No.: 117591
Project Contact: Kay Everette
Project Telephone No.: 713-996-4421
Point of contact: Diane Meyer
Telephone No.: 713-996-4408
Project Manager/Supervisor: Praveen Srivastav

Analysis and Method Desired (Indicate separate containers)

Item No.	Sample Number	Date	Time	Comp	Grab	Matrix	Sample Description, Location	Number of Containers	VOC-8260B	Anions 300.0	376.2 Sulfides	314.0 Perchlorate	Gases (RSK SOP 175) CO2	310.1 Alkalinity	TOC 415.1	Remarks
1	LHSMW04-Feb2007	2/20 07	1530		✓	W	GW, Site 35A	3	✓							
2	LHSMW04-Feb2007	2/20 07	1530		✓	W	GW, Site 35A	3					✓			
3	LHSMW04-Feb2007	2/20 07	1530		✓	W	GW, Site 35A	3							✓	
4	LHSMW04-Feb2007	2/20 07	1530		✓	W	GW, Site 35A	1		✓						
5	LHSMW04-Feb2007	2/20 07	1530		✓	W	GW, Site 35A	1			✓					
6	LHSMW04-Feb2007	2/20 07	1530		✓	W	GW, Site 35A	1						✓		
7	LHSMW04-Feb2007	2/20 07	1530		✓	W	GW, Site 35A	1				✓				
8																
9																
10																

Transfers Relinquished By (Signature)	Date/Time	Transfers Accepted By (Signature)	Date/Time
Sherry McPeloo	2-20-07 1630	Scott Beasley	2-21-07 08:10
Scott Beasley	2-21-07 08:30		
		Laboratory A. Rodriguez	2/21/07 9:50

Special Instructions: UPS

FedEx Airbill No.: 1Z 11V 725 01 9259 8203

Sampler's Signature: Sherry McPeloo

TAT: ____ Standard ____ Rush Due: ____ Seals Intact? ✓ Y ____ N Received Good Condition ✓ Y ____ N ✓ Cold

White - Lab Copy Canary - Field Copy Pink - File Copy

4.1 4

T16411: Chain of Custody
Page 4 of 7

T16411

Shaw® Shaw Environmental, Inc.

3010 Briarpark Drive, Suite 4N
Houston, TX 77042 (713) 996-4400

CHAIN-OF-CUSTODY

No. 10952

Laboratory Name: Accutest
Address: 10165 Harwin Dr. #150, Houston, TX 77036
Contact: Agnes 713-271-4700

Project Name: Longhorn Army Ammunition Plant
Project Location: Karnack, TX
Project No.: 117591
Project Contact: Kay Everette
Project Telephone No.: 713-996-4421
Point of contact: Diane Meyer
Telephone No.: 713-996-4408
Project Manager/Supervisor: Praveen Srivastav

Analysis and Method Desired (Indicate separate containers)

Item No.	Sample Number	Date	Time	Comp	Grab	Matrix	Sample Description, Location	Number of Containers	Anions: 300.0	Sulfides 376.2	Perchlorate 314.0	Gases/RSK GC2 (SOP 115)	Alkalinity 310.1	TOC 415.1	VOC - 8260B	Remarks
10 1	LHSMW18-Feb2007	2/20/07			✓	W	GW-Site 46 SM	6							✓	ms/msD
2	LHSMW18-Feb 2007	2/20/07			✓	W	GW Site 46 SM	3				✓				ms/msD
3	LHSMW18-Feb2007	2/20/07			✓	W	GW Site 46 SM	3						✓		ms/msD
4	LHSMW18-Feb 2007	2/20/07			✓	W	GW Site 46	3	✓							ms/msD
5	LHSMW18-Feb2007	2/20			✓	W	GW Site 46	3		✓						ms/msD
6	LHSMW18-Feb2007	2/20			✓	W	GW Site 46	3			✓					ms/msD
7	LHSMW18-Feb2007	2/20			✓	W	GW Site 46	3					✓			ms/msD
	AR															
11 9	t.b. - AR-2-22-07															
12 10	⊥ ⊥															

Transfers Relinquished By (Signature)	Date/Time	Transfers Accepted By (Signature)	Date/Time
Sherry McAdoo	2-20-07 1630	Scott Beesley	2-21-07 08:10
Scott Beesley	2-21-07 08:30		

Special Instructions: If ~~need too~~, please lab needs more sample volume for a parameter ~~from~~ VOAs. Please take from a voa labeled for an different parameter.

Fedex Airbill No.: UPS 1Z166V7250192598203

Laboratory: A. Rodriguez 2/21/07 9:50

Sampler's Signature: Sherry McAdoo

TAT: ____ Standard ____ Rush Due: ____ Seals Intact? ✓ Y ____ N Received Good Condition ✓ Y ____ N ✓ Cold

White - Lab Copy Canary - Field Copy Pink - File Copy

4.1 4

ACCUTEST

VARIANCE MEMO
SAMPLE LOG-IN

SAMPLE(S) various
PROJECT LHAAP
FILED BY AR

DATE 2/22/07
LAB NO. T16411

VARIANCE - Check applicable Items(s):

- ____ Insufficient sample sent for proper analysis; received approx. ____
- ____ Sample bottle received broken and/or cap not intact.
- ____ Samples received without paperwork; paperwork received without samples.
- ____ Samples received without proper refrigeration, when it has been deemed necessary. Temperature at receipt: ____
- ____ Illegible sample number or label missing from bottle.
- ____ Numbers on sample not the same as numbers on paper work.
- ____ Incomplete instructions received with sample(s) ie.,no request for analysis, no chain of custody, incomplete billing instructions, no due date, etc. Temperature at reciept: ____
- ____ Samples received in improper container or lacking proper preservation.
- ____ Physical characteristics different than those on sampling sheets; Describe: ____
- ____ Rush samples on hold because of incomplete paperwork.
- ____ Other (specify) Sample numbers 1,4,and 5 were all received exceeding hold times.

CORRECTIVE ACTION TAKEN

Diane M. Person Contacted

- ____ Client informed verbally.
- ✓ Client informed by ~~memo/letter~~. email
- ____ Samples processed as is.
- ____ Samples preserved by lab.
- ____ Client will resample and resubmit.

- ✓ By phone.
- ____ Samples processed for information only and noted on report.
- ____ Samples processed with higher detection limits accepted.
- ____ Samples rejected.

Notes: Proceed w/ Analysis

ROUTING

TITLE	DATE	INITIALS	CORRECTED?
Sample Manager:			
Login:			
Project Manager:	2/22/07	AS	
Comments:			

Form: SM006

T16411: Chain of Custody
Page 6 of 7

ACCUTEST.

SAMPLE RECEIPT LOG

JOB #: T11411 DATE/TIME RECEIVED: 2/22/07/09:58

CLIENT: Shaw INITIALS: AR

Condition/Variance (Circle "Y" for yes and "N" for no or NA. If "N" is circled, see variance for explanation):

1. (Y) N Sample received in undamaged condition.
2. (Y) N Samples received within temp. range.
3. (Y) N Sample received with proper pH.
4. (Y) N Sample received in proper containers.
5. (Y) N Sample volume sufficient for analysis.
6. (Y) N Sample received with chain of custody.
7. (Y) N Chain of Custody matches **sample IDs and analysis** on containers.
8. (Y) N Samples Headspace acceptable
9. (Y) N NA Custody seal received intact and tamper not evident on cooler.
10. Y N (NA) Custody seal received intact and tamper not evident on bottles.

SAMPLE or FIELD ID	BOTTLE #	DATE SAMPLED	MATRIX	VOLUME	LOCATION	PRESERV.	PH
1-9	1-6	2/20	AQ	40ml.	VREF	1,2,3,4,5,6	U, <2, >12, NA
↓	7-9	↓	↓	↓	2H	1,2,3,4,5,6	U, <2, >12, NA
	10			P1000	↓	1,2,3,4,5,6	U, <2, >12, NA
	11			P500		1,2,3,4,5,6	U, <2, >12, NA
↓	12-13			↓	↓	1,2,3,4,5,6	U, <2, >12, NA
2,3	14			A1000	SUB	1,2,3,4,5,6	U, <2, >12, NA
10	1-18			40ml	VREF	1,2,3,4,5,6	U, <2, >12, NA
↓	19-27	↓	↓	↓	2H	1,2,3,4,5,6	U, <2, >12, NA
	28-30			P1000	↓	1,2,3,4,5,6	U, <2, >12, NA
	31-33			P500		1,2,3,4,5,6	U, <2, >12, NA
↓	34-39	↓		↓	↓	1,2,3,4,5,6	U, <2, >12, NA
(t.b.) 11, 12	1-2	N/A	↓	40ml.	VREF	1,2,3,4,5,6	U, <2, >12, NA
		AR 2-22-07				1,2,3,4,5,6	U, <2, >12, NA
						1,2,3,4,5,6	U, <2, >12, NA
						1,2,3,4,5,6	U, <2, >12, NA
						1,2,3,4,5,6	U, <2, >12, NA

LOCATION: WI: Walk-in VR: Volatile Refrig. SUB: Subcontract EF: Encore Freezer

PRESERVATIVES: 1: None 2: HCL 3: HNO3 4: H2SO4 5: NAOH 6: Other

Comments:

* pH of waters checked excluding volatiles
pH of solls N/A

Delivery method: Courier: UPS

COOLER TEMP: 2.2 COOLER TEMP: 2.1
COOLER TEMP: 3.6 COOLER TEMP: 5.8

Form: SM012, Rev.07/28/06, QAO

4.1 4

T16411: Chain of Custody
Page 7 of 7

0007817

Appendix A Laboratory Data Package Cover Page

This data package consists of:

- ☐ This signature page, the laboratory review checklist, and the following reportable data:
- ☐ R1 Field chain-of-custody documentation;
- ☐ R2 Sample identification cross-reference;
- ☐ R3 Test reports (analytical data sheets) for each environmental sample that includes:
  - a) Items consistent with NELAC 5.13 or ISO/IEC 17025 Section 5.10
  - b) dilution factors,
  - c) preparation methods,
  - d) cleanup methods, and
  - e) if required for the project, tentatively identified compounds (TICs).
- ☐ R4 Surrogate recovery data including:
  - a) Calculated recovery (%R), and
  - b) The laboratory's surrogate QC limits.
- ☐ R5 Test reports/summary forms for blank samples;
- ☐ R6 Test reports/summary forms for laboratory control samples (LCSs) including:
  - a) LCS spiking amounts,
  - b) Calculated %R for each analyte, and
  - c) The laboratory's LCS QC limits.
- ☐ R7 Test reports for project matrix spike/matrix spike duplicates (MS/MSDs) including:
  - a) Samples associated with the MS/MSD clearly identified,
  - b) MS/MSD spiking amounts,
  - c) Concentration of each MS/MSD analyte measured in the parent and spiked samples,
  - d) Calculated %Rs and relative percent differences (RPDs), and
  - e) The laboratory's MS/MSD QC limits
- ☐ R8 Laboratory analytical duplicate (if applicable) recovery and precision:
  - a) the amount of analyte measured in the duplicate,
  - b) the calculated RPD, and
  - c) the laboratory's QC limits for analytical duplicates.
- ☐ R9 List of method quantitation limits (MQLs) for each analyte for each method and matrix;
- ☐ R10 Other problems or anomalies.
- ☐ The Exception Report for every "No" or "Not Reviewed (NR)" item in laboratory review checklist.

Release Statement: I am responsible for the release of this laboratory data package. This data package has been reviewed by the laboratory and is complete and technically compliant with the requirements of the methods used, except where noted by the laboratory in the attached exception reports. By me signature below, I affirm to the best of my knowledge, all problems/anomalies, observed by the laboratory as having the potential to affect the quality of the data, have been identified by the laboratory in the Laboratory Review Checklist, and no information or data have been knowingly withheld that would affect the quality of the data.

Check, if applicable: [ ] This laboratory is an in-house laboratory controlled by the person responding to rule. The official signing the cover page of the rule-required report (for example, the APAR) in which these data are used is responsible for releasing this data package and is by signature affirming the above release statement is true.

Ron Martino	Ron Martino	Lab Director	3/14/2007
Name (Printed)	Signature	Official Title (printed)	Date

1. Items identified by the letter "R" must be included in the laboratory data package submitted in the TRRP-required report(s). Items identified by the letter "S" should be retained and made available upon request for the appropriate retention period.

Appendix A (cont'd): Laboratory Review Checklist: Reportable Data

Laboratory Name: Accutest Laboratories Gulf Coast	LRC Date: 3/14/2007
Project Name: Longhorn	Laboratory Job Number: T16411
Reviewer Name: Ron Martino	Prep Batch Number(s):

#[1]	A[2]	Description	Yes	No	NA[3]	NR[4]	ER#[5]
		Chain-of-custody (C-O-C)					
R1	OI	Did samples meet the laboratory's standard conditions of sample acceptability upon receipt?	X				
		Were all departures from standard conditions described in an exception report?	X				
R2	OI	**Sample and quality control (QC) identification**					
		Are all field sample ID numbers cross-referenced to the laboratory ID numbers?	X				
		Are all laboratory ID numbers cross-referenced to the corresponding QC data?	X				
R3	OI	**Test reports**					
		Were all samples prepared and analyzed within holding times?	X				
		Other than those results < MQL, were all other raw values bracketed by calibration standards?	X				
		Were calculations checked by a peer or supervisor?	X				
		Were all analyte identifications checked by a peer or supervisor?	X				
		Were sample quantitation limits reported for all analytes not detected?	X				
		Were all results for soil and sediment samples reported on a dry weight basis?			X		
		Were % moisture (or solids) reported for all soil and sediment samples?			X		
		If required for the project, TICs reported?			X		
R4	O	**Surrogate recovery data**					
		Were surrogates added prior to extraction?	X				
		Were surrogate percent recoveries in all samples within the laboratory QC limits?	X				
R5	OI	**Test reports/summary forms for blank samples**					
		Were appropriate type(s) of blanks analyzed?	X				
		Were blanks analyzed at the appropriate frequency?	X				
		Were method blanks taken through the entire analytical process, including preparation and, if applicable, cleanup procedures?	X				
		Were blank concentrations < MQL?	X				
R6	OI	**Laboratory control samples (LCS):**					
		Were all COCs included in the LCS?	X				
		Was each LCS taken through the entire analytical procedure, including prep and cleanup steps?	X				
		Were LCSs analyzed at the required frequency?	X				
		Were LCS (and LCSD, if applicable) %Rs within the laboratory QC limits?	X				
		Does the detectability data document the laboratory's capability to detect the COCs at the MDL used to calculate the SQLs?	X				
		Was the LCSD RPD within QC limits?			X		
R7	OI	**Matrix spike (MS) and matrix spike duplicate (MSD) data**					
		Were the project/method specified analytes included in the MS and MSD?	X				
		Were MS/MSD analyzed at the appropriate frequency?	X				
		Were MS (and MSD, if applicable) %Rs within the laboratory QC limits?		X			2
		Were MS/MSD RPDs within laboratory QC limits?	X				
R8	OI	**Analytical duplicate data**					
		Were appropriate analytical duplicates analyzed for each matrix?	X				
		Were analytical duplicates analyzed at the appropriate frequency?	X				
		Were RPDs or relative standard deviations within the laboratory QC limits?	X				
R9	OI	**Method quantitation limits (MQLs):**					
		Are the MQLs for each method analyte included in the laboratory data package?	X				
		Do the MQLs correspond to the concentration of the lowest non-zero calibration standard?	X				
		Are unadjusted MQLs included in the laboratory data package?	X				
R10	OI	**Other problems/anomalies**					
		Are all known problems/anomalies/special conditions noted in this LRC and ER?	X				
		Were all necessary corrective actions performed for the reported data?	X				

2. = organic analyses; I = inorganic analyses (and general chemistry, when applicable);
3. NA = Not applicable;
4. NR = Not reviewed;
5. ER# = Exception Report identification number (an Exception Report should be completed for an item if "NR" or "No" is checked).

Appendix A (cont'd): Laboratory Review Checklist: Reportable Data

Laboratory Name: Accutest Laboratories Gulf Coast	LRC Date: 3/14/2007
Project Name: Longhorn	Laboratory Job Number: T16411
Reviewer Name: Ron Martino	Prep Batch Number(s):

#[1]	A[2]	Description	Yes	No	NA[3]	NR[4]	ER#[5]
S1	OI	Initial calibration (ICAL)					
		Were response factors and/or relative response factors for each analyte within QC limits?	X				
		Were percent RSDs or correlation coefficient criteria met?	X				
		Was the number of standards recommended in the method used for all analytes?	X				
		Were all points generated between the lowest and highest standard used to calculate the curve?	X				
		Are ICAL data available for all instruments used?	X				
		Has the initial calibration curve been verified using an appropriate second source standard?	X				
S2	OI	Initial and continuing calibration verification (ICCV and CCV) and continuing calibration					
		Was the CCV analyzed at the method-required frequency?	X				
		Were percent differences for each analyte within the method-required QC limits?	X				
		Was the ICAL curve verified for each analyte?	X				
		Was the absolute value of the analyte concentration in the inorganic CCB < MDL?	X				
S3	O	Mass spectral tuning:					
		Was the appropriate compound for the method used for tuning?	X				
		Were ion abundance data within the method-required QC limits?	X				
S4	O	Internal standards (IS):					
		Were IS area counts and retention times within the method-required QC limits?	X				
S5	OI	Raw data (NELAC section 1 appendix A glossary, and section 5.12 or ISO/IEC 17025 section					
		Were the raw data (for example, chromatograms, spectral data) reviewed by an analyst?	X				
		Were data associated with manual integrations flagged on the raw data?	X				
S6	O	Dual column confirmation					
		Did dual column confirmation results meet the method-required QC?	X				
S7	O	Tentatively identified compounds (TICs):					
		If TICs were requested, were the mass spectra and TIC data subject to appropriate checks?			X		
S8	I	Interference Check Sample (ICS) results:					
		Were percent recoveries within method QC limits?			X		
	I	Serial dilutions, post digestion spikes, and method of standard additions					
		Were percent differences, recoveries, and the linearity within the QC limits specified in the method?			X		
S10	OI	Method detection limit (MDL) studies					
		Was a MDL study performed for each reported analyte?	X				
		Is the MDL either adjusted or supported by the analysis of DCSs?	X				
S11	OI	Proficiency test reports:					
		Was the laboratory's performance acceptable on the applicable proficiency tests or evaluation studies?	X				
S12	OI	Standards documentation					
		Are all standards used in the analyses NIST-traceable or obtained from other appropriate sources?	X				
S13	OI	Compound/analyte identification procedures					
		Are the procedures for compound/analyte identification documented?	X				
S14	OI	Demonstration of analyst competency (DOC)					
		Was DOC conducted consistent with NELAC Chapter 5C or ISO/IEC 4?	X				
		Is documentation of the analyst's competency up-to-date and on file?	X				
S15	OI	Verification/validation documentation for methods (NELAC Chap 5 or ISO/IEC 17025 Section 5)					
		Are all the methods used to generate the data documented, verified, and validated, where applicable?	X				
S16	OI	Laboratory standard operating procedures (SOPs):					
		Are laboratory SOPs current and on file for each method performed?	X				

1 Items identified by the letter "R" should be included in the laboratory data package submitted to the TCEQ in the TRRP-required report(s). Items identified by the letter "S" should be retained and made available upon request for the appropriate retention period.
2 O = organic analyses; I = inorganic analyses (and general chemistry, when applicable).
3 NA = Not applicable.
4 NR = Not Reviewed.
5 ER# = Exception Report identification number (an Exception Report should be completed for an item if "NR" or "No" is checked).

Appendix A (cont'd): Laboratory Review Checklist: Exception Reports	
Laboratory Name: Accutest Laboratories Gulf Coast	LRC Date: 3/14/2007
Project Name: Longhorn	Laboratory Job Number: T16411
Reviewer Name: Ron Martino	Prep Batch Number(s):

ER #[1]	DESCRIPTION
1	For reporting purposes, the MQL is defined in the report as the RL. The unadjusted MQL/RL is reported in the method blank. The SQL/MDL is defined in the report as the MDL.
2	All anomalies are discussed in the case narrative.

ER# = Exception Report identification number (an Exception Report should be completed for an item if "NR" or "No" is checked on the LRC)

GC/MS Volatiles

QC Data Summaries

Includes the following where applicable:

- Method Blank Summaries
- Blank Spike Summaries
- Matrix Spike and Duplicate Summaries
- Instrument Performance Checks (BFB)
- Internal Standard Area Summaries
- Surrogate Recovery Summaries
- Initial and Continuing Calibration Summaries

Method Blank Summary

Job Number: T16411
Account: ITTXHO Shaw E & I, Inc.
Project: Longhorn Army Ammunition Plant

Sample	File ID	DF	Analyzed	By	Prep Date	Prep Batch	Analytical Batch
VF2305-MB	F0078974.D	1	02/28/07	LJ	n/a	n/a	VF2305

The QC reported here applies to the following samples: Method: SW846 8260B

T16411-1, T16411-2, T16411-3

CAS No.	Compound	Result	RL	MDL	Units	Q
67-64-1	Acetone	ND	50	2.8	ug/l	
71-43-2	Benzene	ND	2.0	0.23	ug/l	
75-27-4	Bromodichloromethane	ND	2.0	0.33	ug/l	
75-25-2	Bromoform	ND	2.0	0.65	ug/l	
108-90-7	Chlorobenzene	ND	2.0	0.54	ug/l	
75-00-3	Chloroethane	ND	2.0	0.46	ug/l	
67-66-3	Chloroform	ND	2.0	0.66	ug/l	
75-15-0	Carbon disulfide	ND	2.0	0.62	ug/l	
56-23-5	Carbon tetrachloride	ND	2.0	0.52	ug/l	
75-34-3	1,1-Dichloroethane	ND	2.0	0.52	ug/l	
75-35-4	1,1-Dichloroethylene	ND	2.0	0.68	ug/l	
107-06-2	1,2-Dichloroethane	ND	2.0	0.53	ug/l	
78-87-5	1,2-Dichloropropane	ND	2.0	0.59	ug/l	
124-48-1	Dibromochloromethane	ND	2.0	0.68	ug/l	
156-59-2	cis-1,2-Dichloroethylene	ND	2.0	0.83	ug/l	
10061-01-5	cis-1,3-Dichloropropene	ND	2.0	0.59	ug/l	
156-60-5	trans-1,2-Dichloroethylene	ND	2.0	0.75	ug/l	
10061-02-6	trans-1,3-Dichloropropene	ND	2.0	0.61	ug/l	
100-41-4	Ethylbenzene	ND	2.0	0.48	ug/l	
591-78-6	2-Hexanone	ND	10	1.9	ug/l	
108-10-1	4-Methyl-2-pentanone	ND	10	7.3	ug/l	
74-83-9	Methyl bromide	ND	2.0	0.47	ug/l	
74-87-3	Methyl chloride	ND	2.0	0.60	ug/l	
75-09-2	Methylene chloride	ND	5.0	0.67	ug/l	
78-93-3	Methyl ethyl ketone	ND	10	3.0	ug/l	
100-42-5	Styrene	ND	2.0	0.50	ug/l	
71-55-6	1,1,1-Trichloroethane	ND	2.0	0.37	ug/l	
79-34-5	1,1,2,2-Tetrachloroethane	ND	2.0	0.46	ug/l	
79-00-5	1,1,2-Trichloroethane	ND	2.0	0.66	ug/l	
127-18-4	Tetrachloroethylene	ND	2.0	0.74	ug/l	
108-88-3	Toluene	ND	2.0	0.54	ug/l	
79-01-6	Trichloroethylene	ND	2.0	0.63	ug/l	
75-01-4	Vinyl chloride	ND	2.0	0.32	ug/l	
1330-20-7	Xylene (total)	ND	6.0	1.1	ug/l	

Method Blank Summary

Job Number: T16411
Account: ITTXHO Shaw E & I, Inc.
Project: Longhorn Army Ammunition Plant

Sample	File ID	DF	Analyzed	By	Prep Date	Prep Batch	Analytical Batch
VF2305-MB	F0078974.D	1	02/28/07	LJ	n/a	n/a	VF2305

The QC reported here applies to the following samples: Method: SW846 8260B

T16411-1, T16411-2, T16411-3

CAS No.	Surrogate Recoveries		Limits
1868-53-7	Dibromofluoromethane	100%	73-139%
17060-07-0	1,2-Dichloroethane-D4	93%	66-139%
2037-26-5	Toluene-D8	106%	77-148%
460-00-4	4-Bromofluorobenzene	113%	84-150%

Method Blank Summary

Job Number: T16411
Account: ITTXHO Shaw E & I, Inc.
Project: Longhorn Army Ammunition Plant

Sample	File ID	DF	Analyzed	By	Prep Date	Prep Batch	Analytical Batch
VF2306-MB	F0078999.D	1	03/01/07	LJ	n/a	n/a	VF2306

The QC reported here applies to the following samples: Method: SW846 8260B

T16411-2, T16411-3, T16411-4, T16411-5, T16411-6, T16411-10

CAS No.	Compound	Result	RL	MDL	Units	Q
67-64-1	Acetone	ND	50	2.8	ug/l	
71-43-2	Benzene	ND	2.0	0.23	ug/l	
75-27-4	Bromodichloromethane	ND	2.0	0.33	ug/l	
75-25-2	Bromoform	ND	2.0	0.65	ug/l	
108-90-7	Chlorobenzene	ND	2.0	0.54	ug/l	
75-00-3	Chloroethane	ND	2.0	0.46	ug/l	
67-66-3	Chloroform	ND	2.0	0.66	ug/l	
75-15-0	Carbon disulfide	ND	2.0	0.62	ug/l	
56-23-5	Carbon tetrachloride	ND	2.0	0.52	ug/l	
75-34-3	1,1-Dichloroethane	ND	2.0	0.52	ug/l	
75-35-4	1,1-Dichloroethylene	ND	2.0	0.68	ug/l	
107-06-2	1,2-Dichloroethane	ND	2.0	0.53	ug/l	
78-87-5	1,2-Dichloropropane	ND	2.0	0.59	ug/l	
124-48-1	Dibromochloromethane	ND	2.0	0.68	ug/l	
156-59-2	cis-1,2-Dichloroethylene	ND	2.0	0.83	ug/l	
10061-01-5	cis-1,3-Dichloropropene	ND	2.0	0.59	ug/l	
156-60-5	trans-1,2-Dichloroethylene	ND	2.0	0.75	ug/l	
10061-02-6	trans-1,3-Dichloropropene	ND	2.0	0.61	ug/l	
100-41-4	Ethylbenzene	ND	2.0	0.48	ug/l	
591-78-6	2-Hexanone	ND	10	1.9	ug/l	
108-10-1	4-Methyl-2-pentanone	ND	10	7.3	ug/l	
74-83-9	Methyl bromide	ND	2.0	0.47	ug/l	
74-87-3	Methyl chloride	ND	2.0	0.60	ug/l	
75-09-2	Methylene chloride	ND	5.0	0.67	ug/l	
78-93-3	Methyl ethyl ketone	ND	10	3.0	ug/l	
100-42-5	Styrene	ND	2.0	0.50	ug/l	
71-55-6	1,1,1-Trichloroethane	ND	2.0	0.37	ug/l	
79-34-5	1,1,2,2-Tetrachloroethane	ND	2.0	0.46	ug/l	
79-00-5	1,1,2-Trichloroethane	ND	2.0	0.66	ug/l	
127-18-4	Tetrachloroethylene	ND	2.0	0.74	ug/l	
108-88-3	Toluene	ND	2.0	0.54	ug/l	
79-01-6	Trichloroethylene	ND	2.0	0.63	ug/l	
75-01-4	Vinyl chloride	ND	2.0	0.32	ug/l	
1330-20-7	Xylene (total)	ND	6.0	1.1	ug/l	

Method Blank Summary

Job Number: T16411
Account: ITTXHO Shaw E & I, Inc.
Project: Longhorn Army Ammunition Plant

Sample	File ID	DF	Analyzed	By	Prep Date	Prep Batch	Analytical Batch
VF2306-MB	F0078999.D	1	03/01/07	LJ	n/a	n/a	VF2306

5.1 5

The QC reported here applies to the following samples: Method: SW846 8260B

T16411-2, T16411-3, T16411-4, T16411-5, T16411-6, T16411-10

CAS No.	Surrogate Recoveries		Limits
1868-53-7	Dibromofluoromethane	101%	73-139%
17060-07-0	1,2-Dichloroethane-D4	94%	66-139%
2037-26-5	Toluene-D8	110%	77-148%
460-00-4	4-Bromofluorobenzene	119%	84-150%

Method Blank Summary

Job Number: T16411
Account: ITTXHO Shaw E & I, Inc.
Project: Longhorn Army Ammunition Plant

Sample	File ID	DF	Analyzed	By	Prep Date	Prep Batch	Analytical Batch
VF2307-MB	F0079026.D	1	03/02/07	LJ	n/a	n/a	VF2307

5.1 5

The QC reported here applies to the following samples: Method: SW846 8260B

T16411-8

CAS No.	Compound	Result	RL	MDL	Units	Q
67-64-1	Acetone	ND	50	2.8	ug/l	
71-43-2	Benzene	ND	2.0	0.23	ug/l	
75-27-4	Bromodichloromethane	ND	2.0	0.33	ug/l	
75-25-2	Bromoform	ND	2.0	0.65	ug/l	
108-90-7	Chlorobenzene	ND	2.0	0.54	ug/l	
75-00-3	Chloroethane	ND	2.0	0.46	ug/l	
67-66-3	Chloroform	ND	2.0	0.66	ug/l	
75-15-0	Carbon disulfide	ND	2.0	0.62	ug/l	
56-23-5	Carbon tetrachloride	ND	2.0	0.52	ug/l	
75-34-3	1,1-Dichloroethane	ND	2.0	0.52	ug/l	
75-35-4	1,1-Dichloroethylene	ND	2.0	0.68	ug/l	
107-06-2	1,2-Dichloroethane	ND	2.0	0.53	ug/l	
78-87-5	1,2-Dichloropropane	ND	2.0	0.59	ug/l	
124-48-1	Dibromochloromethane	ND	2.0	0.68	ug/l	
10061-01-5	cis-1,3-Dichloropropene	ND	2.0	0.59	ug/l	
156-60-5	trans-1,2-Dichloroethylene	ND	2.0	0.75	ug/l	
10061-02-6	trans-1,3-Dichloropropene	ND	2.0	0.61	ug/l	
100-41-4	Ethylbenzene	ND	2.0	0.48	ug/l	
591-78-6	2-Hexanone	ND	10	1.9	ug/l	
108-10-1	4-Methyl-2-pentanone	ND	10	7.3	ug/l	
74-83-9	Methyl bromide	ND	2.0	0.47	ug/l	
74-87-3	Methyl chloride	ND	2.0	0.60	ug/l	
75-09-2	Methylene chloride	ND	5.0	0.67	ug/l	
78-93-3	Methyl ethyl ketone	ND	10	3.0	ug/l	
100-42-5	Styrene	ND	2.0	0.50	ug/l	
71-55-6	1,1,1-Trichloroethane	ND	2.0	0.37	ug/l	
79-34-5	1,1,2,2-Tetrachloroethane	ND	2.0	0.46	ug/l	
79-00-5	1,1,2-Trichloroethane	ND	2.0	0.66	ug/l	
127-18-4	Tetrachloroethylene	ND	2.0	0.74	ug/l	
108-88-3	Toluene	ND	2.0	0.54	ug/l	
75-01-4	Vinyl chloride	ND	2.0	0.32	ug/l	
1330-20-7	Xylene (total)	ND	6.0	1.1	ug/l	

Method Blank Summary

Job Number: T16411
Account: ITTXHO Shaw E & I, Inc.
Project: Longhorn Army Ammunition Plant

Sample	File ID	DF	Analyzed	By	Prep Date	Prep Batch	Analytical Batch
VF2307-MB	F0079026.D	1	03/02/07	LJ	n/a	n/a	VF2307

5.1 5

The QC reported here applies to the following samples: Method: SW846 8260B

T16411-8

CAS No.	Surrogate Recoveries		Limits
1868-53-7	Dibromofluoromethane	101%	73-139%
17060-07-0	1,2-Dichloroethane-D4	96%	66-139%
2037-26-5	Toluene-D8	107%	77-148%
460-00-4	4-Bromofluorobenzene	129%	84-150%

Method Blank Summary

Job Number: T16411
Account: ITTXHO Shaw E & I, Inc.
Project: Longhorn Army Ammunition Plant

Sample	File ID	DF	Analyzed	By	Prep Date	Prep Batch	Analytical Batch
VF2309-MB	F0079058.D	1	03/03/07	RR	n/a	n/a	VF2309

The QC reported here applies to the following samples: Method: SW846 8260B

T16411-7, T16411-9, T16411-11

CAS No.	Compound	Result	RL	MDL	Units	Q
67-64-1	Acetone	ND	50	2.8	ug/l	
71-43-2	Benzene	ND	2.0	0.23	ug/l	
75-27-4	Bromodichloromethane	ND	2.0	0.33	ug/l	
75-25-2	Bromoform	ND	2.0	0.65	ug/l	
108-90-7	Chlorobenzene	ND	2.0	0.54	ug/l	
75-00-3	Chloroethane	ND	2.0	0.46	ug/l	
67-66-3	Chloroform	ND	2.0	0.66	ug/l	
75-15-0	Carbon disulfide	ND	2.0	0.62	ug/l	
56-23-5	Carbon tetrachloride	ND	2.0	0.52	ug/l	
75-34-3	1,1-Dichloroethane	ND	2.0	0.52	ug/l	
75-35-4	1,1-Dichloroethylene	ND	2.0	0.68	ug/l	
107-06-2	1,2-Dichloroethane	ND	2.0	0.53	ug/l	
78-87-5	1,2-Dichloropropane	ND	2.0	0.59	ug/l	
124-48-1	Dibromochloromethane	ND	2.0	0.68	ug/l	
156-59-2	cis-1,2-Dichloroethylene	ND	2.0	0.83	ug/l	
10061-01-5	cis-1,3-Dichloropropene	ND	2.0	0.59	ug/l	
156-60-5	trans-1,2-Dichloroethylene	ND	2.0	0.75	ug/l	
10061-02-6	trans-1,3-Dichloropropene	ND	2.0	0.61	ug/l	
100-41-4	Ethylbenzene	ND	2.0	0.48	ug/l	
591-78-6	2-Hexanone	ND	10	1.9	ug/l	
108-10-1	4-Methyl-2-pentanone	ND	10	7.3	ug/l	
74-83-9	Methyl bromide	ND	2.0	0.47	ug/l	
74-87-3	Methyl chloride	ND	2.0	0.60	ug/l	
75-09-2	Methylene chloride	ND	5.0	0.67	ug/l	
78-93-3	Methyl ethyl ketone	ND	10	3.0	ug/l	
100-42-5	Styrene	ND	2.0	0.50	ug/l	
71-55-6	1,1,1-Trichloroethane	ND	2.0	0.37	ug/l	
79-34-5	1,1,2,2-Tetrachloroethane	ND	2.0	0.46	ug/l	
79-00-5	1,1,2-Trichloroethane	ND	2.0	0.66	ug/l	
127-18-4	Tetrachloroethylene	ND	2.0	0.74	ug/l	
108-88-3	Toluene	ND	2.0	0.54	ug/l	
79-01-6	Trichloroethylene	ND	2.0	0.63	ug/l	
75-01-4	Vinyl chloride	ND	2.0	0.32	ug/l	
1330-20-7	Xylene (total)	ND	6.0	1.1	ug/l	

Method Blank Summary

Job Number: T16411
Account: ITTXHO Shaw E & I, Inc.
Project: Longhorn Army Ammunition Plant

Sample	File ID	DF	Analyzed	By	Prep Date	Prep Batch	Analytical Batch
VF2309-MB	F0079058.D	1	03/03/07	RR	n/a	n/a	VF2309

5.1 6

The QC reported here applies to the following samples: Method: SW846 8260B

T16411-7, T16411-9, T16411-11

CAS No.	Surrogate Recoveries		Limits
1868-53-7	Dibromofluoromethane	105%	73-139%
17060-07-0	1,2-Dichloroethane-D4	88%	66-139%
2037-26-5	Toluene-D8	109%	77-148%
460-00-4	4-Bromofluorobenzene	126%	84-150%

Method Blank Summary

Job Number: T16411
Account: ITTXHO Shaw E & I, Inc.
Project: Longhorn Army Ammunition Plant

Sample	File ID	DF	Analyzed	By	Prep Date	Prep Batch	Analytical Batch
VF2311-MB	F0079093.D	1	03/05/07	LJ	n/a	n/a	VF2311

The QC reported here applies to the following samples: Method: SW846 8260B

T16411-8

CAS No.	Compound	Result	RL	MDL	Units	Q
156-59-2	cis-1,2-Dichloroethylene	ND	2.0	0.83	ug/l	
79-01-6	Trichloroethylene	ND	2.0	0.63	ug/l	

CAS No.	Surrogate Recoveries		Limits
1868-53-7	Dibromofluoromethane	104%	73-139%
17060-07-0	1,2-Dichloroethane-D4	98%	66-139%
2037-26-5	Toluene-D8	107%	77-148%
460-00-4	4-Bromofluorobenzene	120%	84-150%

Blank Spike Summary

Job Number: T16411
Account: ITTXHO Shaw E & I, Inc.
Project: Longhorn Army Ammunition Plant

Sample	File ID	DF	Analyzed	By	Prep Date	Prep Batch	Analytical Batch
VF2305-BS	F0078972.D	1	02/28/07	LJ	n/a	n/a	VF2305

5.2 5

The QC reported here applies to the following samples: Method: SW846 8260B

T16411-1, T16411-2, T16411-3

CAS No.	Compound	Spike ug/l	BSP ug/l	BSP %	Limits
67-64-1	Acetone	125	93.3	75	31-158
71-43-2	Benzene	25	22.5	90	67-118
75-27-4	Bromodichloromethane	25	20.4	82	66-115
75-25-2	Bromoform	25	21.2	85	57-119
108-90-7	Chlorobenzene	25	21.9	88	72-116
75-00-3	Chloroethane	25	25.0	100	61-135
67-66-3	Chloroform	25	22.7	91	66-117
75-15-0	Carbon disulfide	25	21.6	86	39-136
56-23-5	Carbon tetrachloride	25	25.2	101	67-131
75-34-3	1,1-Dichloroethane	25	22.7	91	63-125
75-35-4	1,1-Dichloroethylene	25	23.2	93	52-143
107-06-2	1,2-Dichloroethane	25	21.9	88	61-120
78-87-5	1,2-Dichloropropane	25	21.8	87	64-118
124-48-1	Dibromochloromethane	25	20.9	84	67-117
156-59-2	cis-1,2-Dichloroethylene	25	21.3	85	65-116
10061-01-5	cis-1,3-Dichloropropene	25	21.6	86	67-118
156-60-5	trans-1,2-Dichloroethylene	25	23.0	92	66-128
10061-02-6	trans-1,3-Dichloropropene	25	22.4	90	73-126
100-41-4	Ethylbenzene	25	22.2	89	71-119
591-78-6	2-Hexanone	125	99.1	79	45-132
108-10-1	4-Methyl-2-pentanone	125	101	81	46-127
74-83-9	Methyl bromide	25	21.6	86	51-126
74-87-3	Methyl chloride	25	21.3	85	47-130
75-09-2	Methylene chloride	25	19.5	78	53-130
78-93-3	Methyl ethyl ketone	125	96.9	78	47-128
100-42-5	Styrene	25	18.8	75	69-115
71-55-6	1,1,1-Trichloroethane	25	23.6	94	67-128
79-34-5	1,1,2,2-Tetrachloroethane	25	20.8	83	57-121
79-00-5	1,1,2-Trichloroethane	25	21.7	87	62-117
127-18-4	Tetrachloroethylene	25	24.5	98	72-128
108-88-3	Toluene	25	22.5	90	70-121
79-01-6	Trichloroethylene	25	23.6	94	69-120
75-01-4	Vinyl chloride	25	23.0	92	59-145
1330-20-7	Xylene (total)	75	67.4	90	72-120

Blank Spike Summary

Job Number: T16411
Account: ITTXHO Shaw E & I, Inc.
Project: Longhorn Army Ammunition Plant

Sample	File ID	DF	Analyzed	By	Prep Date	Prep Batch	Analytical Batch
VF2305-BS	F0078972.D	1	02/28/07	LJ	n/a	n/a	VF2305

The QC reported here applies to the following samples: Method: SW846 8260B

T16411-1, T16411-2, T16411-3

CAS No.	Surrogate Recoveries	BSP	Limits
1868-53-7	Dibromofluoromethane	99%	73-139%
17060-07-0	1,2-Dichloroethane-D4	94%	66-139%
2037-26-5	Toluene-D8	102%	77-148%
460-00-4	4-Bromofluorobenzene	102%	84-150%

Blank Spike Summary

Job Number: T16411
Account: ITTXHO Shaw E & I, Inc.
Project: Longhorn Army Ammunition Plant

Sample	File ID	DF	Analyzed	By	Prep Date	Prep Batch	Analytical Batch
VF2306-BS2	F0078998.D	1	03/01/07	LJ	n/a	n/a	VF2306

The QC reported here applies to the following samples: Method: SW846 8260B

T16411-2, T16411-3, T16411-4, T16411-5, T16411-6, T16411-10

CAS No.	Compound	Spike ug/l	BSP ug/l	BSP %	Limits

CAS No.	Surrogate Recoveries	BSP	Limits
1868-53-7	Dibromofluoromethane	98%	73-139%
17060-07-0	1,2-Dichloroethane-D4	93%	66-139%
2037-26-5	Toluene-D8	103%	77-148%
460-00-4	4-Bromofluorobenzene	106%	84-150%

Blank Spike Summary

Job Number: T16411
Account: ITTXHO Shaw E & I, Inc.
Project: Longhorn Army Ammunition Plant

Sample	File ID	DF	Analyzed	By	Prep Date	Prep Batch	Analytical Batch
VF2307-BS	F0079025.D	1	03/02/07	LJ	n/a	n/a	VF2307

The QC reported here applies to the following samples: Method: SW846 8260B

T16411-8

CAS No.	Compound	Spike ug/l	BSP ug/l	BSP %	Limits
67-64-1	Acetone	125	99.0	79	31-158
71-43-2	Benzene	25	23.6	94	67-118
75-27-4	Bromodichloromethane	25	22.3	89	66-115
75-25-2	Bromoform	25	21.2	85	57-119
108-90-7	Chlorobenzene	25	22.9	92	72-116
75-00-3	Chloroethane	25	25.6	102	61-135
67-66-3	Chloroform	25	24.3	97	66-117
75-15-0	Carbon disulfide	25	22.4	90	39-136
56-23-5	Carbon tetrachloride	25	26.9	108	67-131
75-34-3	1,1-Dichloroethane	25	24.8	99	63-125
75-35-4	1,1-Dichloroethylene	25	25.3	101	52-143
107-06-2	1,2-Dichloroethane	25	24.6	98	61-120
78-87-5	1,2-Dichloropropane	25	23.9	96	64-118
124-48-1	Dibromochloromethane	25	21.3	85	67-117
10061-01-5	cis-1,3-Dichloropropene	25	22.6	90	67-118
156-60-5	trans-1,2-Dichloroethylene	25	24.0	96	66-128
10061-02-6	trans-1,3-Dichloropropene	25	22.8	91	73-126
100-41-4	Ethylbenzene	25	23.0	92	71-119
591-78-6	2-Hexanone	125	104	83	45-132
108-10-1	4-Methyl-2-pentanone	125	110	88	46-127
74-83-9	Methyl bromide	25	23.1	92	51-126
74-87-3	Methyl chloride	25	23.8	95	47-130
75-09-2	Methylene chloride	25	22.4	90	53-130
78-93-3	Methyl ethyl ketone	125	104	83	47-128
100-42-5	Styrene	25	19.0	76	69-115
71-55-6	1,1,1-Trichloroethane	25	26.0	104	67-128
79-34-5	1,1,2,2-Tetrachloroethane	25	20.1	80	57-121
79-00-5	1,1,2-Trichloroethane	25	21.4	86	62-117
127-18-4	Tetrachloroethylene	25	25.2	101	72-128
108-88-3	Toluene	25	23.5	94	70-121
75-01-4	Vinyl chloride	25	25.7	103	59-145
1330-20-7	Xylene (total)	75	69.3	92	72-120

Blank Spike Summary

Job Number: T16411
Account: ITTXHO Shaw E & I, Inc.
Project: Longhorn Army Ammunition Plant

Sample	File ID	DF	Analyzed	By	Prep Date	Prep Batch	Analytical Batch
VF2307-BS	F0079025.D	1	03/02/07	LJ	n/a	n/a	VF2307

The QC reported here applies to the following samples: Method: SW846 8260B

T16411-8

CAS No.	Surrogate Recoveries	BSP	Limits
1868-53-7	Dibromofluoromethane	103%	73-139%
17060-07-0	1,2-Dichloroethane-D4	97%	66-139%
2037-26-5	Toluene-D8	102%	77-148%
460-00-4	4-Bromofluorobenzene	99%	84-150%

Blank Spike Summary

Job Number: T16411
Account: ITTXHO Shaw E & I, Inc.
Project: Longhorn Army Ammunition Plant

Sample	File ID	DF	Analyzed	By	Prep Date	Prep Batch	Analytical Batch
VF2309-BS	F0079056.D	1	03/03/07	RR	n/a	n/a	VF2309

5.2 5

The QC reported here applies to the following samples: Method: SW846 8260B

T16411-7, T16411-9, T16411-11

CAS No.	Compound	Spike ug/l	BSP ug/l	BSP %	Limits
67-64-1	Acetone	125	72.4	58	31-158
71-43-2	Benzene	25	23.9	96	67-118
75-27-4	Bromodichloromethane	25	21.6	86	66-115
75-25-2	Bromoform	25	20.5	82	57-119
108-90-7	Chlorobenzene	25	24.4	98	72-116
75-00-3	Chloroethane	25	23.6	94	61-135
67-66-3	Chloroform	25	24.5	98	66-117
75-15-0	Carbon disulfide	25	20.4	82	39-136
56-23-5	Carbon tetrachloride	25	27.5	110	67-131
75-34-3	1,1-Dichloroethane	25	23.9	96	63-125
75-35-4	1,1-Dichloroethylene	25	22.5	90	52-143
107-06-2	1,2-Dichloroethane	25	21.3	85	61-120
78-87-5	1,2-Dichloropropane	25	23.3	93	64-118
124-48-1	Dibromochloromethane	25	21.1	84	67-117
156-59-2	cis-1,2-Dichloroethylene	25	23.1	92	65-116
10061-01-5	cis-1,3-Dichloropropene	25	23.2	93	67-118
156-60-5	trans-1,2-Dichloroethylene	25	22.8	91	66-128
10061-02-6	trans-1,3-Dichloropropene	25	22.0	88	73-126
100-41-4	Ethylbenzene	25	24.4	98	71-119
591-78-6	2-Hexanone	125	78.5	63	45-132
108-10-1	4-Methyl-2-pentanone	125	83.3	67	46-127
74-83-9	Methyl bromide	25	19.8	79	51-126
74-87-3	Methyl chloride	25	18.5	74	47-130
75-09-2	Methylene chloride	25	19.5	78	53-130
78-93-3	Methyl ethyl ketone	125	75.7	61	47-128
100-42-5	Styrene	25	20.0	80	69-115
71-55-6	1,1,1-Trichloroethane	25	26.6	106	67-128
79-34-5	1,1,2,2-Tetrachloroethane	25	18.9	76	57-121
79-00-5	1,1,2-Trichloroethane	25	20.6	82	62-117
127-18-4	Tetrachloroethylene	25	28.1	112	72-128
108-88-3	Toluene	25	24.7	99	70-121
79-01-6	Trichloroethylene	25	25.1	100	69-120
75-01-4	Vinyl chloride	25	19.7	79	59-145
1330-20-7	Xylene (total)	75	74.6	99	72-120

Blank Spike Summary

Job Number: T16411
Account: ITTXHO Shaw E & I, Inc.
Project: Longhorn Army Ammunition Plant

Sample	File ID	DF	Analyzed	By	Prep Date	Prep Batch	Analytical Batch
VF2309-BS	F0079056.D	1	03/03/07	RR	n/a	n/a	VF2309

5.2 G

The QC reported here applies to the following samples: Method: SW846 8260B

T16411-7, T16411-9, T16411-11

CAS No.	Surrogate Recoveries	BSP	Limits
1868-53-7	Dibromofluoromethane	105%	73-139%
17060-07-0	1,2-Dichloroethane-D4	92%	66-139%
2037-26-5	Toluene-D8	106%	77-148%
460-00-4	4-Bromofluorobenzene	106%	84-150%

Blank Spike Summary

Job Number: T16411
Account: ITTXHO Shaw E & I, Inc.
Project: Longhorn Army Ammunition Plant

Sample	File ID	DF	Analyzed	By	Prep Date	Prep Batch	Analytical Batch
VF2311-BS	F0079092.D	1	03/05/07	LJ	n/a	n/a	VF2311

5.2 5

The QC reported here applies to the following samples: Method: SW846 8260B

T16411-8

CAS No.	Compound	Spike ug/l	BSP ug/l	BSP %	Limits
156-59-2	cis-1,2-Dichloroethylene	25	22.9	92	65-116
79-01-6	Trichloroethylene	25	24.3	97	69-120

CAS No.	Surrogate Recoveries	BSP	Limits
1868-53-7	Dibromofluoromethane	106%	73-139%
17060-07-0	1,2-Dichloroethane-D4	105%	66-139%
2037-26-5	Toluene-D8	105%	77-148%
460-00-4	4-Bromofluorobenzene	104%	84-150%

Matrix Spike/Matrix Spike Duplicate Summary

Job Number: T16411
Account: ITTXHO Shaw E & I, Inc.
Project: Longhorn Army Ammunition Plant

Sample	File ID	DF	Analyzed	By	Prep Date	Prep Batch	Analytical Batch
T16395-2MS	F0078979.D	1	02/28/07	LJ	n/a	n/a	VF2305
T16395-2MSD	F0078980.D	1	02/28/07	LJ	n/a	n/a	VF2305
T16395-2	F0078978.D	1	02/28/07	LJ	n/a	n/a	VF2305

5.3

The QC reported here applies to the following samples: Method: SW846 8260B

T16411-1, T16411-2, T16411-3

CAS No.	Compound	T16395-2 ug/l	Q	Spike ug/l	MS ug/l	MS %	MSD ug/l	MSD %	RPD	Limits Rec/RPD
67-64-1	Acetone	50 U		125	107	86	97.6	78	9	39-130/26
71-43-2	Benzene	2.0 U		25	24.7	99	25.2	101	2	65-122/15
75-27-4	Bromodichloromethane	2.0 U		25	22.6	90	23.2	93	3	64-119/22
75-25-2	Bromoform	2.0 U		25	23.9	96	22.7	91	5	50-123/28
108-90-7	Chlorobenzene	2.0 U		25	24.3	97	25.0	100	3	72-118/20
75-00-3	Chloroethane	2.0 U		25	25.7	103	25.4	102	1	60-136/25
67-66-3	Chloroform	2.0 U		25	25.0	100	25.3	101	1	65-120/20
75-15-0	Carbon disulfide	2.0 U		25	23.8	95	24.2	97	2	37-140/24
56-23-5	Carbon tetrachloride	2.0 U		25	27.6	110	28.0	112	1	64-135/23
75-34-3	1,1-Dichloroethane	2.0 U		25	25.8	103	26.6	106	3	65-126/21
75-35-4	1,1-Dichloroethylene	2.0 U		25	25.8	103	25.6	102	1	55-140/25
107-06-2	1,2-Dichloroethane	2.0 U		25	25.4	102	24.2	97	5	57-125/25
78-87-5	1,2-Dichloropropane	2.0 U		25	24.6	98	25.0	100	2	63-121/22
124-48-1	Dibromochloromethane	2.0 U		25	23.1	92	22.8	91	1	60-123/23
156-59-2	cis-1,2-Dichloroethylene	2.0 U		25	23.6	94	24.2	97	3	62-120/24
10061-01-5	cis-1,3-Dichloropropene	2.0 U		25	23.3	93	24.0	96	3	61-119/23
156-60-5	trans-1,2-Dichloroethylene	2.0 U		25	25.0	100	25.5	102	2	64-130/22
10061-02-6	trans-1,3-Dichloropropene	2.0 U		25	24.4	98	24.8	99	2	65-129/23
100-41-4	Ethylbenzene	2.0 U		25	24.3	97	24.9	100	2	70-123/18
591-78-6	2-Hexanone	10 U		125	119	95	111	89	7	41-137/27
108-10-1	4-Methyl-2-pentanone	10 U		125	124	99	115	92	8	41-133/22
74-83-9	Methyl bromide	2.0 U		25	23.7	95	22.6	90	5	47-129/27
74-87-3	Methyl chloride	2.0 U		25	24.1	96	22.2	89	8	45-133/24
75-09-2	Methylene chloride	5.0 U		25	23.4	94	23.2	93	1	49-128/21
78-93-3	Methyl ethyl ketone	10 U		125	114	91	105	84	8	43-125/29
100-42-5	Styrene	2.0 U		25	20.3	81	20.7	83	2	65-120/21
71-55-6	1,1,1-Trichloroethane	2.0 U		25	26.5	106	27.2	109	3	68-131/21
79-34-5	1,1,2,2-Tetrachloroethane	2.0 U		25	22.6	90	21.1	84	7	50-128/22
79-00-5	1,1,2-Trichloroethane	2.0 U		25	23.7	95	23.5	94	1	58-120/22
127-18-4	Tetrachloroethylene	2.0 U		25	26.6	106	27.4	110	3	69-132/21
108-88-3	Toluene	2.0 U		25	24.6	98	25.5	102	4	70-123/18
79-01-6	Trichloroethylene	2.0 U		25	25.0	100	25.4	102	2	70-120/19
75-01-4	Vinyl chloride	2.0 U		25	25.7	103	24.0	96	7	51-147/24
1330-20-7	Xylene (total)	6.0 U		75	74.5	99	76.1	101	2	71-122/16

Matrix Spike/Matrix Spike Duplicate Summary

Job Number: T16411
Account: ITTXHO Shaw E & I, Inc.
Project: Longhorn Army Ammunition Plant

Sample	File ID	DF	Analyzed	By	Prep Date	Prep Batch	Analytical Batch
T16395-2MS	F0078979.D	1	02/28/07	LJ	n/a	n/a	VF2305
T16395-2MSD	F0078980.D	1	02/28/07	LJ	n/a	n/a	VF2305
T16395-2	F0078978.D	1	02/28/07	LJ	n/a	n/a	VF2305

5.3

5

The QC reported here applies to the following samples: Method: SW846 8260B

T16411-1, T16411-2, T16411-3

CAS No.	Surrogate Recoveries	MS	MSD	T16395-2	Limits
1868-53-7	Dibromofluoromethane	99%	104%	102%	73-139%
17060-07-0	1,2-Dichloroethane-D4	98%	97%	101%	66-139%
2037-26-5	Toluene-D8	103%	107%	109%	77-148%
460-00-4	4-Bromofluorobenzene	100%	100%	118%	84-150%

Matrix Spike/Matrix Spike Duplicate Summary

Job Number: T16411
Account: ITTXHO Shaw E & I, Inc.
Project: Longhorn Army Ammunition Plant

Sample	File ID	DF	Analyzed	By	Prep Date	Prep Batch	Analytical Batch
T16411-10MS	F0079015.D	1	03/01/07	LJ	n/a	n/a	VF2306
T16411-10MSD	F0079016.D	1	03/01/07	LJ	n/a	n/a	VF2306
T16411-10	F0079014.D	1	03/01/07	LJ	n/a	n/a	VF2306

The QC reported here applies to the following samples: Method: SW846 8260B

T16411-2, T16411-3, T16411-4, T16411-5, T16411-6, T16411-10

CAS No.	Compound	T16411-10 ug/l	Q	Spike ug/l	MS ug/l	MS %	MSD ug/l	MSD %	RPD	Limits Rec/RPD
67-64-1	Acetone	50 U		125	96.7	77	84.7	68	13	39-130/26
71-43-2	Benzene	2.0 U		25	24.3	97	24.5	98	1	65-122/15
75-27-4	Bromodichloromethane	2.0 U		25	22.3	89	22.3	89	0	64-119/22
75-25-2	Bromoform	2.0 U		25	20.9	84	19.9	80	5	50-123/28
108-90-7	Chlorobenzene	2.0 U		25	23.5	94	23.6	94	0	72-118/20
75-00-3	Chloroethane	2.0 U		25	26.6	106	25.2	101	5	60-136/25
67-66-3	Chloroform	2.0 U		25	24.8	99	24.9	100	0	65-120/20
75-15-0	Carbon disulfide	2.0 U		25	22.6	90	22.7	91	0	37-140/24
56-23-5	Carbon tetrachloride	2.0 U		25	27.1	108	27.3	109	1	64-135/23
75-34-3	1,1-Dichloroethane	2.0 U		25	25.5	102	25.1	100	2	65-126/21
75-35-4	1,1-Dichloroethylene	2.0 U		25	25.6	102	24.8	99	3	55-140/25
107-06-2	1,2-Dichloroethane	2.0 U		25	24.2	97	22.4	90	8	57-125/25
78-87-5	1,2-Dichloropropane	2.0 U		25	23.9	96	23.7	95	1	63-121/22
124-48-1	Dibromochloromethane	2.0 U		25	21.6	86	21.0	84	3	60-123/23
156-59-2	cis-1,2-Dichloroethylene	1.5	J	25	23.8	89	24.4	92	2	62-120/24
10061-01-5	cis-1,3-Dichloropropene	2.0 U		25	19.7	79	20.0	80	2	61-119/23
156-60-5	trans-1,2-Dichloroethylene	2.0 U		25	24.2	97	24.2	97	0	64-130/22
10061-02-6	trans-1,3-Dichloropropene	2.0 U		25	19.8	79	19.5	78	2	65-129/23
100-41-4	Ethylbenzene	2.0 U		25	22.8	91	22.9	92	0	70-123/18
591-78-6	2-Hexanone	10 U		125	102	82	97.3	78	5	41-137/27
108-10-1	4-Methyl-2-pentanone	10 U		125	109	87	103	82	6	41-133/22
74-83-9	Methyl bromide	2.0 U		25	23.4	94	21.9	88	7	47-129/27
74-87-3	Methyl chloride	2.0 U		25	25.8	103	23.3	93	10	45-133/24
75-09-2	Methylene chloride	5.0 U		25	22.7	91	22.2	89	2	49-128/21
78-93-3	Methyl ethyl ketone	10 U		125	98.2	79	90.5	72	8	43-125/29
100-42-5	Styrene	2.0 U		25	1.8	7*	2.0	8*	11	65-120/21
71-55-6	1,1,1-Trichloroethane	2.0 U		25	27.0	108	27.0	108	0	68-131/21
79-34-5	1,1,2,2-Tetrachloroethane	2.0 U		25	19.8	79	19.0	76	4	50-128/22
79-00-5	1,1,2-Trichloroethane	2.0 U		25	21.3	85	20.8	83	2	58-120/22
127-18-4	Tetrachloroethylene	2.0 U		25	24.8	99	25.2	101	2	69-132/21
108-88-3	Toluene	2.0 U		25	23.3	93	23.9	96	3	70-123/18
79-01-6	Trichloroethylene	4.8		25	29.4	98	29.6	99	1	70-120/19
75-01-4	Vinyl chloride	2.0 U		25	26.8	107	24.9	100	7	51-147/24
1330-20-7	Xylene (total)	6.0 U		75	69.9	93	69.3	92	1	71-122/16

Matrix Spike/Matrix Spike Duplicate Summary

Job Number: T16411
Account: ITTXHO Shaw E & I, Inc.
Project: Longhorn Army Ammunition Plant

Sample	File ID	DF	Analyzed	By	Prep Date	Prep Batch	Analytical Batch
T16411-10MS	F0079015.D	1	03/01/07	LJ	n/a	n/a	VF2306
T16411-10MSD	F0079016.D	1	03/01/07	LJ	n/a	n/a	VF2306
T16411-10	F0079014.D	1	03/01/07	LJ	n/a	n/a	VF2306

5.3

The QC reported here applies to the following samples: Method: SW846 8260B

T16411-2, T16411-3, T16411-4, T16411-5, T16411-6, T16411-10

CAS No.	Surrogate Recoveries	MS	MSD	T16411-10	Limits
1868-53-7	Dibromofluoromethane	104%	104%	102%	73-139%
17060-07-0	1,2-Dichloroethane-D4	99%	97%	97%	66-139%
2037-26-5	Toluene-D8	105%	103%	107%	77-148%
460-00-4	4-Bromofluorobenzene	100%	101%	119%	84-150%

Matrix Spike/Matrix Spike Duplicate Summary

Job Number: T16411
Account: ITTXHO Shaw E & I, Inc.
Project: Longhorn Army Ammunition Plant

Sample	File ID	DF	Analyzed	By	Prep Date	Prep Batch	Analytical Batch
T16431-22MS	F0079032.D	1	03/02/07	LJ	n/a	n/a	VF2307
T16431-22MSD	F0079033.D	1	03/02/07	LJ	n/a	n/a	VF2307
T16431-22 [a]	F0079031.D	1	03/02/07	LJ	n/a	n/a	VF2307

5.3 G

The QC reported here applies to the following samples: Method: SW846 8260B

T16411-8

CAS No.	Compound	T16431-22 ug/l	Q	Spike ug/l	MS ug/l	MS %	MSD ug/l	MSD %	RPD	Limits Rec/RPD
67-64-1	Acetone	4.8	J	125	87.9	66	83.2	63	5	39-130/26
71-43-2	Benzene	ND		25	22.1	88	19.7	79	11	65-122/15
75-27-4	Bromodichloromethane	ND		25	20.6	82	18.8	75	9	64-119/22
75-25-2	Bromoform	ND		25	18.9	76	17.1	68	10	50-123/28
108-90-7	Chlorobenzene	ND		25	21.3	85	19.0	76	11	72-118/20
75-00-3	Chloroethane	ND		25	26.8	107	23.2	93	14	60-136/25
67-66-3	Chloroform	ND		25	22.9	92	20.3	81	12	65-120/20
75-15-0	Carbon disulfide	ND		25	20.7	83	17.4	70	17	37-140/24
56-23-5	Carbon tetrachloride	ND		25	25.0	100	20.1	80	22	64-135/23
75-34-3	1,1-Dichloroethane	ND		25	23.7	95	21.2	85	11	65-126/21
75-35-4	1,1-Dichloroethylene	ND		25	23.0	92	18.9	76	20	55-140/25
107-06-2	1,2-Dichloroethane	ND		25	22.3	89	19.9	80	11	57-125/25
78-87-5	1,2-Dichloropropane	ND		25	22.5	90	21.0	84	7	63-121/22
124-48-1	Dibromochloromethane	ND		25	18.8	75	17.8	71	5	60-123/23
10061-01-5	cis-1,3-Dichloropropene	ND		25	20.4	82	18.3	73	11	61-119/23
156-60-5	trans-1,2-Dichloroethylene	ND		25	21.7	87	19.1	76	13	64-130/22
10061-02-6	trans-1,3-Dichloropropene	ND		25	20.1	80	18.0	72	11	65-129/23
100-41-4	Ethylbenzene	ND		25	21.4	86	18.5	74	15	70-123/18
591-78-6	2-Hexanone	ND		125	89.2	71	83.2	67	7	41-137/27
108-10-1	4-Methyl-2-pentanone	ND		125	99.1	79	90.4	72	9	41-133/22
74-83-9	Methyl bromide	ND		25	23.8	95	21.9	88	8	47-129/27
74-87-3	Methyl chloride	ND		25	26.1	104	23.1	92	12	45-133/24
75-09-2	Methylene chloride	ND		25	21.6	86	20.0	80	8	49-128/21
78-93-3	Methyl ethyl ketone	ND		125	91.4	73	84.5	68	8	43-125/29
100-42-5	Styrene	ND		25	16.4	66	14.2	57*	14	65-120/21
71-55-6	1,1,1-Trichloroethane	ND		25	24.5	98	19.8	79	21	68-131/21
79-34-5	1,1,2,2-Tetrachloroethane	ND		25	19.4	78	18.7	75	4	50-128/22
79-00-5	1,1,2-Trichloroethane	ND		25	19.3	77	18.3	73	5	58-120/22
127-18-4	Tetrachloroethylene	ND		25	22.5	90	18.9	76	17	69-132/21
108-88-3	Toluene	ND		25	21.9	88	19.7	79	11	70-123/18
75-01-4	Vinyl chloride	ND		25	27.1	108	21.9	88	21	51-147/24
1330-20-7	Xylene (total)	ND		75	64.8	86	56.0	75	15	71-122/16

Matrix Spike/Matrix Spike Duplicate Summary

Job Number: T16411
Account: ITTXHO Shaw E & I, Inc.
Project: Longhorn Army Ammunition Plant

Sample	File ID	DF	Analyzed	By	Prep Date	Prep Batch	Analytical Batch
T16431-22MS	F0079032.D	1	03/02/07	LJ	n/a	n/a	VF2307
T16431-22MSD	F0079033.D	1	03/02/07	LJ	n/a	n/a	VF2307
T16431-22 [a]	F0079031.D	1	03/02/07	LJ	n/a	n/a	VF2307

5.3

The QC reported here applies to the following samples: Method: SW846 8260B

T16411-8

CAS No.	Surrogate Recoveries	MS	MSD	T16431-22	Limits
1868-53-7	Dibromofluoromethane	104%	98%	103%	73-139%
17060-07-0	1,2-Dichloroethane-D4	99%	89%	96%	66-139%
2037-26-5	Toluene-D8	106%	106%	109%	77-148%
460-00-4	4-Bromofluorobenzene	110%	113%	129%	84-150%

(a) Suspected laboratory contaminant.

Matrix Spike/Matrix Spike Duplicate Summary

Job Number: T16411
Account: ITTXHO Shaw E & I, Inc.
Project: Longhorn Army Ammunition Plant

Sample	File ID	DF	Analyzed	By	Prep Date	Prep Batch	Analytical Batch
T16440-7MS	F0079071.D	1	03/03/07	RR	n/a	n/a	VF2309
T16440-7MSD	F0079072.D	1	03/03/07	RR	n/a	n/a	VF2309
T16440-7	F0079070.D	1	03/03/07	RR	n/a	n/a	VF2309

The QC reported here applies to the following samples: Method: SW846 8260B

T16411-7, T16411-9, T16411-11

CAS No.	Compound	T16440-7 ug/l	Q	Spike ug/l	MS ug/l	MS %	MSD ug/l	MSD %	RPD	Limits Rec/RPD
67-64-1	Acetone	ND		125	62.7	50	57.7	46	8	39-130/26
71-43-2	Benzene	ND		25	23.6	94	23.5	94	0	65-122/15
75-27-4	Bromodichloromethane	ND		25	20.8	83	20.3	81	2	64-119/22
75-25-2	Bromoform	ND		25	15.9	64	17.1	68	7	50-123/28
108-90-7	Chlorobenzene	ND		25	23.3	93	23.5	94	1	72-118/20
75-00-3	Chloroethane	ND		25	24.4	98	24.3	97	0	60-136/25
67-66-3	Chloroform	ND		25	23.8	95	24.1	96	1	65-120/20
75-15-0	Carbon disulfide	ND		25	20.9	84	21.3	85	2	37-140/24
56-23-5	Carbon tetrachloride	ND		25	26.5	106	26.9	108	1	64-135/23
75-34-3	1,1-Dichloroethane	4.2		25	28.2	96	28.4	97	1	65-126/21
75-35-4	1,1-Dichloroethylene	6.4		25	28.2	87	28.0	86	1	55-140/25
107-06-2	1,2-Dichloroethane	ND		25	19.9	80	19.6	78	2	57-125/25
78-87-5	1,2-Dichloropropane	ND		25	22.7	91	22.7	91	0	63-121/22
124-48-1	Dibromochloromethane	ND		25	18.5	74	18.0	72	3	60-123/23
156-59-2	cis-1,2-Dichloroethylene	31.9		25	53.1	85	53.6	87	1	62-120/24
10061-01-5	cis-1,3-Dichloropropene	ND		25	20.3	81	20.8	83	2	61-119/23
156-60-5	trans-1,2-Dichloroethylene	0.97	J	25	23.6	91	24.0	92	2	64-130/22
10061-02-6	trans-1,3-Dichloropropene	ND		25	19.5	78	19.3	77	1	65-129/23
100-41-4	Ethylbenzene	ND		25	23.7	95	23.6	94	0	70-123/18
591-78-6	2-Hexanone	ND		125	63.9	51	64.5	52	1	41-137/27
108-10-1	4-Methyl-2-pentanone	ND		125	73.5	59	71.9	58	2	41-133/22
74-83-9	Methyl bromide	ND		25	21.2	85	20.3	81	4	47-129/27
74-87-3	Methyl chloride	ND		25	21.1	84	20.0	80	5	45-133/24
75-09-2	Methylene chloride	ND		25	20.7	83	20.6	82	0	49-128/21
78-93-3	Methyl ethyl ketone	ND		125	66.3	53	64.8	52	2	43-125/29
100-42-5	Styrene	ND		25	17.8	71	17.6	70	1	65-120/21
71-55-6	1,1,1-Trichloroethane	ND		25	25.6	102	26.3	105	3	68-131/21
79-34-5	1,1,2,2-Tetrachloroethane	ND		25	16.9	68	17.1	68	1	50-128/22
79-00-5	1,1,2-Trichloroethane	ND		25	18.1	72	17.9	72	1	58-120/22
127-18-4	Tetrachloroethylene	ND		25	26.4	106	26.4	106	0	69-132/21
108-88-3	Toluene	ND		25	24.1	96	24.1	96	0	70-123/18
79-01-6	Trichloroethylene	35.2		25	59.0	95	58.8	94	0	70-120/19
75-01-4	Vinyl chloride	ND		25	22.8	91	21.7	87	5	51-147/24
1330-20-7	Xylene (total)	ND		75	71.6	95	71.9	96	0	71-122/16

Matrix Spike/Matrix Spike Duplicate Summary

Job Number: T16411
Account: ITTXHO Shaw E & I, Inc.
Project: Longhorn Army Ammunition Plant

Sample	File ID	DF	Analyzed	By	Prep Date	Prep Batch	Analytical Batch
T16440-7MS	F0079071.D	1	03/03/07	RR	n/a	n/a	VF2309
T16440-7MSD	F0079072.D	1	03/03/07	RR	n/a	n/a	VF2309
T16440-7	F0079070.D	1	03/03/07	RR	n/a	n/a	VF2309

5.3

5

The QC reported here applies to the following samples: Method: SW846 8260B

T16411-7, T16411-9, T16411-11

CAS No.	Surrogate Recoveries	MS	MSD	T16440-7	Limits
1868-53-7	Dibromofluoromethane	103%	101%	103%	73-139%
17060-07-0	1,2-Dichloroethane-D4	85%	84%	86%	66-139%
2037-26-5	Toluene-D8	107%	106%	113%	77-148%
460-00-4	4-Bromofluorobenzene	109%	106%	143%	84-150%

Matrix Spike/Matrix Spike Duplicate Summary

Job Number: T16411
Account: ITTXHO Shaw E & I, Inc.
Project: Longhorn Army Ammunition Plant

Sample	File ID	DF	Analyzed	By	Prep Date	Prep Batch	Analytical Batch
T16440-12MS	F0079096.D	1	03/05/07	LJ	n/a	n/a	VF2311
T16440-12MSD	F0079097.D	1	03/05/07	LJ	n/a	n/a	VF2311
T16440-12	F0079095.D	1	03/05/07	LJ	n/a	n/a	VF2311

5.3 G

The QC reported here applies to the following samples: Method: SW846 8260B

T16411-8

CAS No.	Compound	T16440-12 ug/l	Q	Spike ug/l	MS ug/l	MS %	MSD ug/l	MSD %	RPD	Limits Rec/RPD
156-59-2	cis-1,2-Dichloroethylene	ND		25	23.7	95	22.8	91	4	62-120/24
79-01-6	Trichloroethylene	ND		25	25.1	100	23.7	95	6	70-120/19

CAS No.	Surrogate Recoveries	MS	MSD	T16440-12	Limits
1868-53-7	Dibromofluoromethane	110%	106%	110%	73-139%
17060-07-0	1,2-Dichloroethane-D4	106%	105%	105%	66-139%
2037-26-5	Toluene-D8	105%	103%	111%	77-148%
460-00-4	4-Bromofluorobenzene	100%	100%	123%	84-150%

Instrument Performance Check (BFB)

Job Number: T16411
Account: ITTXHO Shaw E & I, Inc.
Project: Longhorn Army Ammunition Plant

Sample:	VF2276-BFB	Injection Date:	02/12/07
Lab File ID:	F0078488.D	Injection Time:	17:39
Instrument ID:	GCMSF		

5.4 5

m/e	Ion Abundance Criteria	Raw Abundance	% Relative Abundance		Pass/Fail
50	15.0 - 40.0% of mass 95	10313	15.8		Pass
75	30.0 - 60.0% of mass 95	24771	38.0		Pass
95	Base peak, 100% relative abundance	65123	100.0		Pass
96	5.0 - 9.0% of mass 95	4343	6.7		Pass
173	Less than 2.0% of mass 174	344	0.53	(0.67) [a]	Pass
174	50.0 - 100.0% of mass 95	51261	78.7		Pass
175	5.0 - 9.0% of mass 174	3763	5.8	(7.3) [a]	Pass
176	95.0 - 101.0% of mass 174	49896	76.6	(97.3) [a]	Pass
177	5.0 - 9.0% of mass 176	3355	5.2	(6.7) [b]	Pass

(a) Value is % of mass 174
(b) Value is % of mass 176

This check applies to the following Samples, MS, MSD, Blanks, and Standards:

Lab Sample ID	Lab File ID	Date Analyzed	Time Analyzed	Hours Lapsed	Client Sample ID
VF2276-IC2276	F0078490.D	02/12/07	18:42	01:03	Initial cal 200
VF2276-IC2276	F0078491.D	02/12/07	19:14	01:35	Initial cal 400
VF2276-ICC2276	F0078492.D	02/12/07	19:46	02:07	Initial cal 1000
VF2276-IC2276	F0078493.D	02/12/07	20:18	02:39	Initial cal 2000
VF2276-IC2276	F0078494.D	02/12/07	20:49	03:10	Initial cal 4000
VF2276-IC2276	F0078495.D	02/12/07	21:21	03:42	Initial cal 10000

Instrument Performance Check (BFB)

Job Number: T16411
Account: ITTXHO Shaw E & I, Inc.
Project: Longhorn Army Ammunition Plant

Sample:	VF2305-BFB	Injection Date:	02/28/07
Lab File ID:	F0078963.D	Injection Time:	14:36
Instrument ID:	GCMSF		

5.4 5

m/e	Ion Abundance Criteria	Raw Abundance	% Relative Abundance		Pass/Fail
50	15.0 - 40.0% of mass 95	7281	16.0		Pass
75	30.0 - 60.0% of mass 95	18364	40.3		Pass
95	Base peak, 100% relative abundance	45541	100.0		Pass
96	5.0 - 9.0% of mass 95	2793	6.1		Pass
173	Less than 2.0% of mass 174	107	0.23	(0.27) [a]	Pass
174	50.0 - 100.0% of mass 95	39123	85.9		Pass
175	5.0 - 9.0% of mass 174	3023	6.6	(7.7) [a]	Pass
176	95.0 - 101.0% of mass 174	37355	82.0	(95.5) [a]	Pass
177	5.0 - 9.0% of mass 176	2802	6.2	(7.5) [b]	Pass

(a) Value is % of mass 174
(b) Value is % of mass 176

This check applies to the following Samples, MS, MSD, Blanks, and Standards:

Lab Sample ID	Lab File ID	Date Analyzed	Time Analyzed	Hours Lapsed	Client Sample ID
VF2305-IC2305	F0078964.D	02/28/07	15:10	00:34	Initial cal 2
VF2305-IC2305	F0078965.D	02/28/07	15:41	01:05	Initial cal 5
VF2305-IC2305	F0078966.D	02/28/07	16:12	01:36	Initial cal 20
VF2305-ICC2305	F0078967.D	02/28/07	16:44	02:08	Initial cal 40
VF2305-IC2305	F0078968.D	02/28/07	17:16	02:40	Initial cal 70
VF2305-IC2305	F0078969.D	02/28/07	17:46	03:10	Initial cal 100
VF2305-IC2305	F0078970.D	02/28/07	18:18	03:42	Initial cal 200
VF2305-BS	F0078972.D	02/28/07	19:21	04:45	Blank Spike
VF2305-MB	F0078974.D	02/28/07	20:24	05:48	Method Blank
ZZZZZZ	F0078975.D	02/28/07	20:55	06:19	(unrelated sample)
ZZZZZZ	F0078976.D	02/28/07	21:26	06:50	(unrelated sample)
ZZZZZZ	F0078977.D	02/28/07	21:58	07:22	(unrelated sample)
T16395-2	F0078978.D	02/28/07	22:30	07:54	(used for QC only; not part of job T16411)
T16395-2MS	F0078979.D	02/28/07	23:00	08:24	Matrix Spike
T16395-2MSD	F0078980.D	02/28/07	23:32	08:56	Matrix Spike Duplicate
ZZZZZZ	F0078981.D	03/01/07	00:03	09:27	(unrelated sample)
T16411-1	F0078982.D	03/01/07	00:35	09:59	LHSMW22-FEB2007
T16411-2	F0078983.D	03/01/07	01:06	10:30	17WW01-FEB2007
T16411-3	F0078984.D	03/01/07	01:38	11:02	17WW01-FEB2007-FD
ZZZZZZ	F0078989.D	03/01/07	04:15	13:39	(unrelated sample)
ZZZZZZ	F0078990.D	03/01/07	04:47	14:11	(unrelated sample)
ZZZZZZ	F0078991.D	03/01/07	05:19	14:43	(unrelated sample)
ZZZZZZ	F0078992.D	03/01/07	05:50	15:14	(unrelated sample)

Instrument Performance Check (BFB)

Job Number: T16411
Account: ITTXHO Shaw E & I, Inc.
Project: Longhorn Army Ammunition Plant

Sample:	VF2306-BFB	Injection Date:	03/01/07
Lab File ID:	F0078994.D	Injection Time:	07:50
Instrument ID:	GCMSF		

5.4 5

m/e	Ion Abundance Criteria	Raw Abundance	% Relative Abundance		Pass/Fail
50	15.0 - 40.0% of mass 95	6679	18.1		Pass
75	30.0 - 60.0% of mass 95	15417	41.8		Pass
95	Base peak, 100% relative abundance	36917	100.0		Pass
96	5.0 - 9.0% of mass 95	2620	7.1		Pass
173	Less than 2.0% of mass 174	0	0.0	(0.0) [a]	Pass
174	50.0 - 100.0% of mass 95	32187	87.2		Pass
175	5.0 - 9.0% of mass 174	2345	6.4	(7.3) [a]	Pass
176	95.0 - 101.0% of mass 174	31168	84.4	(96.8) [a]	Pass
177	5.0 - 9.0% of mass 176	2163	5.9	(6.9) [b]	Pass

(a) Value is % of mass 174
(b) Value is % of mass 176

This check applies to the following Samples, MS, MSD, Blanks, and Standards:

Lab Sample ID	Lab File ID	Date Analyzed	Time Analyzed	Hours Lapsed	Client Sample ID
VF2306-CC2305	F0078995.D	03/01/07	08:23	00:33	Continuing cal 20
VF2306-CC2276	F0078996.D	03/01/07	08:55	01:05	Continuing cal 1000
VF2306-BS1	F0078997.D	03/01/07	09:31	01:41	Blank Spike
VF2306-BS2	F0078998.D	03/01/07	10:02	02:12	Blank Spike
VF2306-MB	F0078999.D	03/01/07	10:34	02:44	Method Blank
ZZZZZZ	F0079000.D	03/01/07	11:06	03:16	(unrelated sample)
T16411-4	F0079001.D	03/01/07	11:37	03:47	LHSMW19-FEB2007
T16411-5	F0079002.D	03/01/07	12:09	04:19	46WW02-FEB2007
ZZZZZZ	F0079003.D	03/01/07	12:41	04:51	(unrelated sample)
ZZZZZZ	F0079004.D	03/01/07	13:12	05:22	(unrelated sample)
ZZZZZZ	F0079005.D	03/01/07	13:44	05:54	(unrelated sample)
T16411-6	F0079006.D	03/01/07	14:16	06:26	47WW14-FEB2007
T16411-6	F0079007.D	03/01/07	14:47	06:57	47WW14-FEB2007
T16411-2	F0079008.D	03/01/07	15:18	07:28	17WW01-FEB2007
T16411-3	F0079009.D	03/01/07	15:50	08:00	17WW01-FEB2007-FD
ZZZZZZ	F0079010.D	03/01/07	16:22	08:32	(unrelated sample)
ZZZZZZ	F0079011.D	03/01/07	16:54	09:04	(unrelated sample)
ZZZZZZ	F0079012.D	03/01/07	17:26	09:36	(unrelated sample)
ZZZZZZ	F0079013.D	03/01/07	17:57	10:07	(unrelated sample)
T16411-10	F0079014.D	03/01/07	18:28	10:38	LHSMW18-FEB2007
T16411-10MS	F0079015.D	03/01/07	19:01	11:11	Matrix Spike
T16411-10MSD	F0079016.D	03/01/07	19:33	11:43	Matrix Spike Duplicate
ZZZZZZ	F0079020.D	03/01/07	21:39	13:49	(unrelated sample)
ZZZZZZ	F0079021.D	03/01/07	22:12	14:22	(unrelated sample)

Instrument Performance Check (BFB)

Job Number: T16411
Account: ITTXHO Shaw E & I, Inc.
Project: Longhorn Army Ammunition Plant

Sample:	VF2307-BFB	Injection Date:	03/01/07
Lab File ID:	F0079023.D	Injection Time:	23:15
Instrument ID:	GCMSF		

5.4 5

m/e	Ion Abundance Criteria	Raw Abundance	% Relative Abundance		Pass/Fail
50	15.0 - 40.0% of mass 95	6479	18.5		Pass
75	30.0 - 60.0% of mass 95	14099	40.3		Pass
95	Base peak, 100% relative abundance	34960	100.0		Pass
96	5.0 - 9.0% of mass 95	2866	8.2		Pass
173	Less than 2.0% of mass 174	0	0.0	(0.0) [a]	Pass
174	50.0 - 100.0% of mass 95	29845	85.4		Pass
175	5.0 - 9.0% of mass 174	1962	5.6	(6.6) [a]	Pass
176	95.0 - 101.0% of mass 174	28971	82.9	(97.1) [a]	Pass
177	5.0 - 9.0% of mass 176	1954	5.6	(6.7) [b]	Pass

(a) Value is % of mass 174
(b) Value is % of mass 176

This check applies to the following Samples, MS, MSD, Blanks, and Standards:

Lab Sample ID	Lab File ID	Date Analyzed	Time Analyzed	Hours Lapsed	Client Sample ID
VF2307-CC2305	F0079024.D	03/01/07	23:47	00:32	Continuing cal 20
VF2307-BS	F0079025.D	03/02/07	00:19	01:04	Blank Spike
VF2307-MB	F0079026.D	03/02/07	00:51	01:36	Method Blank
ZZZZZZ	F0079027.D	03/02/07	01:23	02:08	(unrelated sample)
ZZZZZZ	F0079028.D	03/02/07	01:54	02:39	(unrelated sample)
ZZZZZZ	F0079029.D	03/02/07	02:26	03:11	(unrelated sample)
ZZZZZZ	F0079030.D	03/02/07	02:57	03:42	(unrelated sample)
T16431-22	F0079031.D	03/02/07	03:29	04:14	(used for QC only; not part of job T16411)
T16431-22MS	F0079032.D	03/02/07	04:00	04:45	Matrix Spike
T16431-22MSD	F0079033.D	03/02/07	07:41	08:26	Matrix Spike Duplicate
T16411-8	F0079035.D	03/02/07	08:46	09:31	47WW13-FEB2007

Instrument Performance Check (BFB)

Job Number: T16411
Account: ITTXHO Shaw E & I, Inc.
Project: Longhorn Army Ammunition Plant

Sample:	VF2309-BFB	Injection Date:	03/03/07
Lab File ID:	F0079054.D	Injection Time:	08:32
Instrument ID:	GCMSF		

5.4 5

m/e	Ion Abundance Criteria	Raw Abundance	% Relative Abundance		Pass/Fail
50	15.0 - 40.0% of mass 95	7788	16.9		Pass
75	30.0 - 60.0% of mass 95	18301	39.8		Pass
95	Base peak, 100% relative abundance	45997	100.0		Pass
96	5.0 - 9.0% of mass 95	3005	6.5		Pass
173	Less than 2.0% of mass 174	0	0.0	(0.0) [a]	Pass
174	50.0 - 100.0% of mass 95	38365	83.4		Pass
175	5.0 - 9.0% of mass 174	2849	6.2	(7.4) [a]	Pass
176	95.0 - 101.0% of mass 174	37640	81.8	(98.1) [a]	Pass
177	5.0 - 9.0% of mass 176	2468	5.4	(6.6) [b]	Pass

(a) Value is % of mass 174
(b) Value is % of mass 176

This check applies to the following Samples, MS, MSD, Blanks, and Standards:

Lab Sample ID	Lab File ID	Date Analyzed	Time Analyzed	Hours Lapsed	Client Sample ID
VF2309-CC2305	F0079055.D	03/03/07	09:18	00:46	Continuing cal 40
VF2309-BS	F0079056.D	03/03/07	10:03	01:31	Blank Spike
VF2309-MB	F0079058.D	03/03/07	11:19	02:47	Method Blank
T16411-11	F0079059.D	03/03/07	11:50	03:18	TRIP BLANK
T16411-7	F0079060.D	03/03/07	12:22	03:50	47WW14-FEB2007-FD
T16411-7	F0079061.D	03/03/07	12:53	04:21	47WW14-FEB2007-FD
T16411-9	F0079063.D	03/03/07	13:57	05:25	LHSMW04-FEB2007
ZZZZZZ	F0079064.D	03/03/07	14:29	05:57	(unrelated sample)
ZZZZZZ	F0079065.D	03/03/07	15:01	06:29	(unrelated sample)
ZZZZZZ	F0079066.D	03/03/07	15:32	07:00	(unrelated sample)
ZZZZZZ	F0079067.D	03/03/07	16:04	07:32	(unrelated sample)
ZZZZZZ	F0079069.D	03/03/07	17:08	08:36	(unrelated sample)
T16440-7	F0079070.D	03/03/07	17:39	09:07	(used for QC only; not part of job T16411)
T16440-7MS	F0079071.D	03/03/07	18:10	09:38	Matrix Spike
T16440-7MSD	F0079072.D	03/03/07	18:42	10:10	Matrix Spike Duplicate
ZZZZZZ	F0079073.D	03/03/07	19:14	10:42	(unrelated sample)
ZZZZZZ	F0079074.D	03/03/07	19:46	11:14	(unrelated sample)
ZZZZZZ	F0079075.D	03/03/07	20:18	11:46	(unrelated sample)

Instrument Performance Check (BFB)

Job Number: T16411
Account: ITTXHO Shaw E & I, Inc.
Project: Longhorn Army Ammunition Plant

Sample:	VF2311-BFB	Injection Date:	03/05/07
Lab File ID:	F0079089.D	Injection Time:	12:14
Instrument ID:	GCMSF		

5.4 5

m/e	Ion Abundance Criteria	Raw Abundance	% Relative Abundance		Pass/Fail
50	15.0 - 40.0% of mass 95	8160	15.5		Pass
75	30.0 - 60.0% of mass 95	19856	37.7		Pass
95	Base peak, 100% relative abundance	52613	100.0		Pass
96	5.0 - 9.0% of mass 95	3596	6.8		Pass
173	Less than 2.0% of mass 174	204	0.39	(0.45) [a]	Pass
174	50.0 - 100.0% of mass 95	45728	86.9		Pass
175	5.0 - 9.0% of mass 174	2949	5.6	(6.4) [a]	Pass
176	95.0 - 101.0% of mass 174	43893	83.4	(96.0) [a]	Pass
177	5.0 - 9.0% of mass 176	2888	5.5	(6.6) [b]	Pass

(a) Value is % of mass 174
(b) Value is % of mass 176

This check applies to the following Samples, MS, MSD, Blanks, and Standards:

Lab Sample ID	Lab File ID	Date Analyzed	Time Analyzed	Hours Lapsed	Client Sample ID
VF2311-CC2305	F0079091.D	03/05/07	13:28	01:14	Continuing cal 40
VF2311-BS	F0079092.D	03/05/07	14:00	01:46	Blank Spike
VF2311-MB	F0079093.D	03/05/07	14:31	02:17	Method Blank
ZZZZZZ	F0079094.D	03/05/07	15:16	03:02	(unrelated sample)
T16440-12	F0079095.D	03/05/07	15:47	03:33	(used for QC only; not part of job T16411)
T16440-12MS	F0079096.D	03/05/07	16:18	04:04	Matrix Spike
T16440-12MSD	F0079097.D	03/05/07	16:48	04:34	Matrix Spike Duplicate
ZZZZZZ	F0079098.D	03/05/07	17:19	05:05	(unrelated sample)
ZZZZZZ	F0079099.D	03/05/07	17:51	05:37	(unrelated sample)
ZZZZZZ	F0079100.D	03/05/07	18:22	06:08	(unrelated sample)
ZZZZZZ	F0079104.D	03/05/07	20:27	08:13	(unrelated sample)
ZZZZZZ	F0079105.D	03/05/07	20:59	08:45	(unrelated sample)
ZZZZZZ	F0079106.D	03/05/07	21:30	09:16	(unrelated sample)
ZZZZZZ	F0079107.D	03/05/07	22:01	09:47	(unrelated sample)
ZZZZZZ	F0079108.D	03/05/07	22:32	10:18	(unrelated sample)
T16411-8	F0079109.D	03/05/07	23:03	10:49	47WW13-FEB2007
ZZZZZZ	F0079110.D	03/05/07	23:35	11:21	(unrelated sample)
ZZZZZZ	F0079111.D	03/06/07	00:06	11:52	(unrelated sample)

Volatile Internal Standard Area Summary

Job Number: T16411
Account: ITTXHO Shaw E & I, Inc.
Project: Longhorn Army Ammunition Plant

Check Std:	VF2305-ICC2305	Injection Date:	02/28/07
Lab File ID:	F0078967.D	Injection Time:	16:44
Instrument ID:	GCMSF	Method:	SW846 8260B

5.5 G

	IS 1 AREA	RT	IS 2 AREA	RT	IS 3 AREA	RT
Check Std	813923	11.95	609604	16.02	248865	19.30
Upper Limit [a]	1627846	12.45	1219208	16.52	497730	19.80
Lower Limit [b]	406962	11.45	304802	15.52	124433	18.80

Lab Sample ID	IS 1 AREA	RT	IS 2 AREA	RT	IS 3 AREA	RT
VF2305-BS	933349	11.95	693096	16.03	262848	19.30
VF2305-MB	854827	11.95	606091	16.03	192974	19.31
ZZZZZZ	838395	11.96	594327	16.03	175579	19.31
ZZZZZZ	800333	11.95	570162	16.03	179344	19.31
ZZZZZZ	787212	11.95	565898	16.03	182794	19.30
T16395-2	744997	11.95	527050	16.03	160154	19.30
T16395-2MS	776605	11.96	577525	16.04	224433	19.31
T16395-2MSD	784273	11.95	577802	16.03	226133	19.30
ZZZZZZ	804224	11.96	558124	16.03	150968	19.31
T16411-1	737116	11.96	512441	16.04	137912	19.31
T16411-2	744233	11.95	534298	16.03	142004	19.32
T16411-3	741736	11.95	529029	16.04	136149	19.31
ZZZZZZ	712319	11.96	491313	16.04	123437*	19.31
ZZZZZZ	669573	11.96	465362	16.04	116108*	19.32
ZZZZZZ	694687	11.96	481226	16.03	122927*	19.31
ZZZZZZ	687951	11.95	478773	16.04	125041	19.31

IS 1 = Fluorobenzene
IS 2 = Chlorobenzene-D5
IS 3 = 1,4-Dichlorobenzene-d4

(a) Upper Limit = +100% of check standard area; Retention time +0.5 minutes.
(b) Lower Limit = -50% of check standard area; Retention time -0.5 minutes.

Volatile Internal Standard Area Summary

Job Number: T16411
Account: ITTXHO Shaw E & I, Inc.
Project: Longhorn Army Ammunition Plant

Check Std:	VF2306-CC2305	Injection Date:	03/01/07
Lab File ID:	F0078995.D	Injection Time:	08:23
Instrument ID:	GCMSF	Method:	SW846 8260B

5.5 5

	IS 1 AREA	RT	IS 2 AREA	RT	IS 3 AREA	RT
Check Std	699201	11.94	525986	16.02	192418	19.30
Upper Limit [a]	1398402	12.44	1051972	16.52	384836	19.80
Lower Limit [b]	349601	11.44	262993	15.52	96209	18.80

Lab Sample ID	IS 1 AREA	RT	IS 2 AREA	RT	IS 3 AREA	RT
VF2306-BS1	777387	11.94	579705	16.01	219016	19.30
VF2306-BS2	816000	11.93	591535	16.01	206818	19.28
VF2306-MB	806821	11.93	553209	16.02	163421	19.28
ZZZZZZ	782363	11.93	537014	16.01	147308	19.28
T16411-4	758389	11.93	519002	16.01	140295	19.27
T16411-5	730503	11.92	505963	16.01	133214	19.28
ZZZZZZ	713902	11.93	493376	16.00	130066	19.28
ZZZZZZ	709648	11.93	489247	16.02	126540	19.28
ZZZZZZ	697001	11.93	477711	16.00	126547	19.28
T16411-6	693179	11.93	488543	16.01	121877	19.29
T16411-6	684656	11.93	471501	16.01	114404	19.28
T16411-2	670434	11.93	467470	16.00	117612	19.28
T16411-3	610736	11.91	425298	16.00	114844	19.26
ZZZZZZ	638047	11.92	449783	15.99	118479	19.26
ZZZZZZ	598577	11.91	425000	16.00	114851	19.27
ZZZZZZ	618266	11.91	428138	16.00	108080	19.26
ZZZZZZ	597863	11.91	425430	15.99	116121	19.25
T16411-10	617663	11.91	436613	15.99	122528	19.25
T16411-10MS	620696	11.90	469833	15.98	178265	19.24
T16411-10MSD	655046	11.90	491723	15.97	183495	19.25
ZZZZZZ	625983	11.89	448435	15.97	117429	19.24
ZZZZZZ	617306	11.89	441010	15.97	117597	19.24

IS 1 = Fluorobenzene
IS 2 = Chlorobenzene-D5
IS 3 = 1,4-Dichlorobenzene-d4

(a) Upper Limit = +100% of check standard area; Retention time +0.5 minutes.
(b) Lower Limit = -50% of check standard area; Retention time -0.5 minutes.

Volatile Internal Standard Area Summary

Job Number: T16411
Account: ITTXHO Shaw E & I, Inc.
Project: Longhorn Army Ammunition Plant

Check Std:	VF2307-CC2305	Injection Date:	03/01/07
Lab File ID:	F0079024.D	Injection Time:	23:47
Instrument ID:	GCMSF	Method:	SW846 8260B

5.5 5

	IS 1 AREA	RT	IS 2 AREA	RT	IS 3 AREA	RT
Check Std	653774	11.90	495815	15.97	181399	19.25
Upper Limit [a]	1307548	12.40	991630	16.47	362798	19.75
Lower Limit [b]	326887	11.40	247908	15.47	90700	18.75

Lab Sample ID	IS 1 AREA	RT	IS 2 AREA	RT	IS 3 AREA	RT
VF2307-BS	690510	11.91	521367	15.98	194408	19.25
VF2307-MB	694833	11.90	485269	15.98	127001	19.25
ZZZZZZ	677005	11.90	476761	15.98	127977	19.25
ZZZZZZ	654215	11.90	460526	15.97	120232	19.25
ZZZZZZ	642432	11.90	448048	15.98	115949	19.25
ZZZZZZ	664112	11.90	457185	15.98	118763	19.24
T16431-22	660969	11.90	462517	15.98	117947	19.25
T16431-22MS	668468	11.90	497979	15.98	171406	19.25
T16431-22MSD	796527	11.90	575274	15.98	184297	19.25
T16411-8	751685	11.89	528008	15.96	123192	19.23

IS 1 = Fluorobenzene
IS 2 = Chlorobenzene-D5
IS 3 = 1,4-Dichlorobenzene-d4

(a) Upper Limit = +100% of check standard area; Retention time +0.5 minutes.
(b) Lower Limit = -50% of check standard area; Retention time -0.5 minutes.

Volatile Internal Standard Area Summary

Job Number: T16411
Account: ITTXHO Shaw E & I, Inc.
Project: Longhorn Army Ammunition Plant

Check Std:	VF2309-CC2305	Injection Date:	03/03/07
Lab File ID:	F0079055.D	Injection Time:	09:18
Instrument ID:	GCMSF	Method:	SW846 8260B

	IS 1 AREA	RT	IS 2 AREA	RT	IS 3 AREA	RT
Check Std	856065	11.86	647343	15.95	243630	19.21
Upper Limit [a]	1712130	12.36	1294686	16.45	487260	19.71
Lower Limit [b]	428033	11.36	323672	15.45	121815	18.71

Lab Sample ID	IS 1 AREA	RT	IS 2 AREA	RT	IS 3 AREA	RT
VF2309-BS	850094	11.87	644670	15.95	227453	19.22
VF2309-MB	789590	11.86	562372	15.94	142145	19.20
T16411-11	820057	11.87	579683	15.94	137048	19.21
T16411-7	767835	11.86	555857	15.94	136452	19.20
T16411-7	757674	11.87	529581	15.95	121676*	19.21
T16411-9	733284	11.87	511411	15.94	113906*	19.21
ZZZZZZ	777911	11.87	544746	15.95	119440*	19.21
ZZZZZZ	752118	11.87	536590	15.95	121221*	19.21
ZZZZZZ	738953	11.87	510669	15.95	108449*	19.21
ZZZZZZ	751492	11.86	525891	15.95	110744*	19.21
ZZZZZZ	737938	11.87	505327	15.94	102412*	19.20
T16440-7	724119	11.86	498319	15.95	103801*	19.20
T16440-7MS	747145	11.86	556580	15.93	179743	19.20
T16440-7MSD	739001	11.86	549609	15.93	179404	19.19
ZZZZZZ	741787	11.86	522075	15.93	116359*	19.20
ZZZZZZ	748904	11.85	530486	15.92	119956*	19.18
ZZZZZZ	741037	11.85	511621	15.92	104181*	19.19

IS 1 = Fluorobenzene
IS 2 = Chlorobenzene-D5
IS 3 = 1,4-Dichlorobenzene-d4

(a) Upper Limit = +100% of check standard area; Retention time +0.5 minutes.
(b) Lower Limit = -50% of check standard area; Retention time -0.5 minutes.

Volatile Internal Standard Area Summary

Job Number: T16411
Account: ITTXHO Shaw E & I, Inc.
Project: Longhorn Army Ammunition Plant

Check Std:	VF2311-CC2305	Injection Date:	03/05/07
Lab File ID:	F0079091.D	Injection Time:	13:28
Instrument ID:	GCMSF	Method:	SW846 8260B

	IS 1 AREA	RT	IS 2 AREA	RT	IS 3 AREA	RT
Check Std	883433	11.84	684892	15.91	274132	19.18
Upper Limit [a]	1766866	12.34	1369784	16.41	548264	19.68
Lower Limit [b]	441717	11.34	342446	15.41	137066	18.68

Lab Sample ID	IS 1 AREA	RT	IS 2 AREA	RT	IS 3 AREA	RT
VF2311-BS	922896	11.85	704898	15.92	266538	19.18
VF2311-MB	908467	11.85	659603	15.92	188680	19.19
ZZZZZZ	880440	11.84	650126	15.91	201227	19.18
T16440-12	816522	11.86	600592	15.93	179209	19.19
T16440-12MS	836970	11.85	650900	15.93	253396	19.18
T16440-12MSD	875382	11.85	676070	15.93	260377	19.18
ZZZZZZ	874022	11.85	643153	15.93	195970	19.18
ZZZZZZ	836383	11.85	615621	15.93	185917	19.18
ZZZZZZ	827669	11.85	609833	15.92	179587	19.18
ZZZZZZ	772734	11.85	573293	15.92	174293	19.18
ZZZZZZ	758882	11.85	559207	15.92	170192	19.19
ZZZZZZ	766389	11.84	555443	15.92	167777	19.18
ZZZZZZ	775040	11.86	570653	15.93	170057	19.19
ZZZZZZ	766991	11.85	579545	15.92	178449	19.18
T16411-8	756328	11.85	557341	15.92	174801	19.18
ZZZZZZ	735049	11.84	537155	15.92	167476	19.18
ZZZZZZ	711087	11.84	519531	15.92	156748	19.19

IS 1 = Fluorobenzene
IS 2 = Chlorobenzene-D5
IS 3 = 1,4-Dichlorobenzene-d4

(a) Upper Limit = +100% of check standard area; Retention time +0.5 minutes.
(b) Lower Limit = -50% of check standard area; Retention time -0.5 minutes.

Volatile Surrogate Recovery Summary

Job Number: T16411
Account: ITTXHO Shaw E & I, Inc.
Project: Longhorn Army Ammunition Plant

Method: SW846 8260B Matrix: AQ

Samples and QC shown here apply to the above method

Lab Sample ID	Lab File ID	S1	S2	S3	S4
T16411-1	F0078982.D	104.0	99.0	112.0	130.0
T16411-2	F0079008.D	101.0	95.0	108.0	131.0
T16411-2	F0078983.D	105.0	100.0	109.0	132.0
T16411-3	F0079009.D	107.0	101.0	112.0	125.0
T16411-3	F0078984.D	104.0	96.0	109.0	134.0
T16411-4	F0079001.D	101.0	94.0	110.0	127.0
T16411-5	F0079002.D	100.0	92.0	108.0	126.0
T16411-6	F0079007.D	101.0	95.0	109.0	132.0
T16411-6	F0079006.D	102.0	94.0	106.0	129.0
T16411-7	F0079061.D	107.0	88.0	114.0	138.0
T16411-7	F0079060.D	105.0	90.0	108.0	128.0
T16411-8	F0079109.D	104.0	102.0	105.0	112.0
T16411-8	F0079035.D	99.0	85.0	107.0	136.0
T16411-9	F0079063.D	108.0	91.0	116.0	145.0
T16411-10	F0079014.D	102.0	97.0	107.0	119.0
T16411-11	F0079059.D	104.0	89.0	110.0	134.0
T16395-2MS	F0078979.D	99.0	98.0	103.0	100.0
T16395-2MSD	F0078980.D	104.0	97.0	107.0	100.0
T16411-10MS	F0079015.D	104.0	99.0	105.0	100.0
T16411-10MSD	F0079016.D	104.0	97.0	103.0	101.0
T16431-22MS	F0079032.D	104.0	99.0	106.0	110.0
T16431-22MSD	F0079033.D	98.0	89.0	106.0	113.0
T16440-12MS	F0079096.D	110.0	106.0	105.0	100.0
T16440-12MSD	F0079097.D	106.0	105.0	103.0	100.0
T16440-7MS	F0079071.D	103.0	85.0	107.0	109.0
T16440-7MSD	F0079072.D	101.0	84.0	106.0	106.0
VF2305-BS	F0078972.D	99.0	94.0	102.0	102.0
VF2305-MB	F0078974.D	100.0	93.0	106.0	113.0
VF2306-BS2	F0078998.D	98.0	93.0	103.0	106.0
VF2306-MB	F0078999.D	101.0	94.0	110.0	119.0
VF2307-BS	F0079025.D	103.0	97.0	102.0	99.0
VF2307-MB	F0079026.D	101.0	96.0	107.0	129.0
VF2309-BS	F0079056.D	105.0	92.0	106.0	106.0
VF2309-MB	F0079058.D	105.0	88.0	109.0	126.0
VF2311-BS	F0079092.D	106.0	105.0	105.0	104.0
VF2311-MB	F0079093.D	104.0	98.0	107.0	120.0

Surrogate Compounds Recovery Limits

Volatile Surrogate Recovery Summary

Job Number: T16411
Account: ITTXHO Shaw E & I, Inc.
Project: Longhorn Army Ammunition Plant

Method: SW846 8260B Matrix: AQ

Samples and QC shown here apply to the above method

Surrogate Compounds	Recovery Limits
S1 = Dibromofluoromethane	73-139%
S2 = 1,2-Dichloroethane-D4	66-139%
S3 = Toluene-D8	77-148%
S4 = 4-Bromofluorobenzene	84-150%

Initial Calibration Summary

Job Number: T16411
Account: ITTXHO Shaw E & I, Inc.
Project: Longhorn Army Ammunition Plant

Sample: VF2276-ICC2276
Lab FileID: F0078492.D

Response Factor Report GC/MS F

Method : C:\HPCHEM\1\METHODS\VF2276GW.M (RTE Integrator)
Title : SW846 8260B and EPA 624
Last Update : Tue Feb 13 07:54:50 2007
Response via : Initial Calibration

Calibration Files
200 =F0078490.D 400 =F0078491.D 1000 =F0078492.D
2000 =F0078493.D 4000 =F0078494.D 9000 =F0078495.D

		Compound	200	400	1000	2000	4000	9000	Avg	%RSD
1)	I	Fluorobenzene	----------ISTD----------							
2)	S	Dibromofluoromethan	0.287	0.281	0.280	0.278	0.270	0.256	0.275	4.06
3)	S	1,2-Dichloroethane-	0.212	0.207	0.211	0.211	0.212	0.209	0.210	0.87
4)	I	Chlorobenzene-d5	----------ISTD----------							
5)	S	Toluene-d8	1.047	1.037	1.041	1.022	1.035	1.039	1.037	0.83
6)	I	1,4-Dichlorobenzene-d	----------ISTD----------							
7)	S	4-Bromofluorobenzen	0.808	0.807	0.790	0.802	0.804	0.865	0.813	3.25
8)	I	1,4-Dichlorobenzene-d	----------ISTD----------							
9)	H	TPH-GRO (C6-C10)	1.214	0.770	0.582	0.475	0.429	0.392	0.644 E1	48.27

----- Linear regression ----- Coefficient = 0.9997
Response Ratio = 37.35716 + 3.74928 *A

(#) = Out of Range

VF2276GW.M Tue Feb 13 09:27:02 2007

Initial Calibration Summary

Job Number: T16411
Account: ITTXHO Shaw E & I, Inc.
Project: Longhorn Army Ammunition Plant

Sample: VF2305-ICC2305
Lab FileID: F0078967.D

Response Factor Report GC/MS F

Method : C:\HPCHEM\1\METHODS\VF2305C.M (RTE Integrator)
Title : SW846 8260B and EPA 624
Last Update : Thu Mar 01 07:31:12 2007
Response via : Initial Calibration

Calibration Files
1 =F0078964.D 2 =F0078965.D 3 =F0078966.D
4 =F0078967.D 5 =F0078968.D 6 =F0078969.D 7 =F0078970.D

Compound	1	2	3	4	5	6	7	Avg	%RSD
1) I Fluorobenzene	----------ISTD----------								
2) Dichlorodifluorom	0.157	0.162	0.153	0.171	0.181	0.178	0.196	0.171	8.89
3)P Chloromethane	0.353	0.368	0.326	0.309	0.319	0.297	0.331	0.329	7.50
4)C Vinyl Chloride	0.279	0.316	0.268	0.280	0.287	0.269	0.300	0.286	6.01
5) Bromomethane	0.275	0.253	0.223	0.215	0.216	0.204	0.190	0.225	12.95
6) Chloroethane	0.203	0.232	0.219	0.222	0.222	0.210	0.211	0.217	4.37
7) Trichlorofluorome	0.137	0.154	0.142	0.159	0.166	0.162	0.164	0.155	7.23
8) Acrolein	0.030	0.030	0.031	0.036	0.036	0.033	0.033	0.033	8.00
9)C 1,1-Dichloroethen	0.287	0.299	0.298	0.320	0.322	0.306	0.312	0.306	4.04
10) Freon 113	0.174	0.190	0.191	0.225	0.225	0.213	0.216	0.205	9.65
11) Acetone	0.065	0.062	0.057	0.052	0.053	0.053	0.052	0.056	9.61
12) Iodomethane	0.405	0.432	0.438	0.436	0.447	0.434	0.445	0.434	3.22
13) Methyl acetate	0.199	0.203	0.197	0.179	0.188	0.186	0.185	0.191	4.56
14) Carbon Disulfide	0.833	0.878	0.869	0.908	0.930	0.885	0.918	0.889	3.74
15) Methylene Chlorid	0.410	0.424	0.407	0.404	0.396	0.378	0.376	0.399	4.34
16) Tert Butyl Alcoho	0.015	0.018	0.018	0.015	0.017	0.018	0.018	0.017	8.14
17) trans-1,2-Dichlor	0.328	0.340	0.340	0.344	0.351	0.337	0.344	0.341	2.11
18) Acrylonitrile	0.086	0.099	0.097	0.091	0.097	0.098	0.097	0.095	4.82
19) Methyl Tert Butyl	0.577	0.603	0.572	0.555	0.578	0.587	0.594	0.581	2.70
20) Hexane	0.300	0.281	0.283	0.341	0.346	0.320	0.315	0.312	8.32
21)P 1,1-Dichloroethan	0.428	0.457	0.436	0.445	0.450	0.430	0.435	0.440	2.44
22) Vinyl acetate	0.513	0.554	0.582	0.564	0.569	0.552	0.517	0.550	4.74
23) Di-isopropyl ethe	0.944	1.012	0.992	0.981	0.988	0.943	0.934	0.971	3.09
24) Ethyl tert-butyl	0.721	0.735	0.733	0.737	0.753	0.739	0.749	0.738	1.43
25) 2,2-Dichloropropa	0.208	0.200	0.197	0.210	0.209	0.202	0.195	0.203	2.91
26) cis-1,2-Dichloroe	0.282	0.305	0.302	0.308	0.307	0.302	0.307	0.302	3.03
27) 2-Butanone	0.113	0.118	0.120	0.105	0.111	0.112	0.109	0.113	4.48
28) Bromochloromethan	0.124	0.142	0.145	0.146	0.147	0.149	0.150	0.143	6.13
29)C Chloroform	0.343	0.363	0.358	0.362	0.364	0.353	0.362	0.358	2.09
30) Tetrahydrofuran	0.048	0.035	0.033	0.030	0.031	0.031	0.029	0.034	19.44
----- Linear regression ----- Coefficient = 0.9988									
Response Ratio = 0.00148 + 0.02898 *A									
31) 1,1,1-Trichloroet	0.196	0.201	0.204	0.213	0.218	0.210	0.215	0.208	3.79
32)S Dibromofluorometh	0.211	0.221	0.210	0.217	0.221	0.221	0.226	0.218	2.61
33) Cyclohexane	0.390	0.405	0.413	0.479	0.485	0.453	0.447	0.439	8.43
34) 1,1-Dichloroprope	0.283	0.279	0.292	0.313	0.321	0.312	0.316	0.302	5.61
35) Carbon Tetrachlor	0.142	0.161	0.164	0.176	0.181	0.177	0.183	0.169	8.57
36)S 1,2-Dichloroethan	0.159	0.173	0.166	0.161	0.165	0.162	0.166	0.165	2.76
37) Benzene	1.089	1.108	1.092	1.113	1.134	1.098	1.119	1.108	1.43
38) 1,2-Dichloroethan	0.181	0.193	0.200	0.205	0.200	0.204	0.201	0.198	4.13
39) tert-amyl methyl	0.712	0.774	0.759	0.736	0.767	0.769	0.782	0.757	3.26
40) Trichloroethene	0.212	0.223	0.218	0.229	0.233	0.229	0.236	0.226	3.78
41) Methylcyclohexane	0.318	0.332	0.335	0.391	0.401	0.384	0.388	0.364	9.38
42)C 1,2-Dichloropropa	0.320	0.304	0.310	0.316	0.320	0.310	0.318	0.314	1.90
43) Dibromomethane	0.129	0.147	0.169	0.160	0.166	0.165	0.170	0.158	9.61

Initial Calibration Summary

Job Number: T16411
Account: ITTXHO Shaw E & I, Inc.
Project: Longhorn Army Ammunition Plant

Sample: VF2305-ICC2305
Lab FileID: F0078967.D

44)	1,4-Dioxane	0.002	0.002	0.002	0.002	0.003	0.003	0.003	0.002	17.15

----- Linear regression ----- Coefficient = 0.9989
Response Ratio = -0.00341 + 0.00271 *A

45)	Bromodichlorometh	0.287	0.300	0.298	0.307	0.311	0.306	0.317	0.304	3.19
46)	2-Nitropropane	0.046	0.042	0.041	0.037	0.038	0.039	0.038	0.040	7.95
47)	2-Chloroethyl vin	0.094	0.104	0.122	0.125	0.136	0.143	0.152	0.125	16.72

----- Linear regression ----- Coefficient = 0.9983
Response Ratio = -0.06248 + 0.15260 *A

48)	4-Methyl-2-pentan	0.229	0.239	0.249	0.234	0.246	0.246	0.237	0.240	3.06
49)	cis-1,3-Dichlorop	0.369	0.397	0.420	0.427	0.443	0.439	0.454	0.421	6.95

50) I Chlorobenzene-d5 ----------ISTD----------

51)S	Toluene-d8	1.147	1.122	1.060	1.073	1.083	1.079	1.120	1.098	2.89
52)C	Toluene	1.382	1.408	1.358	1.387	1.384	1.367	1.417	1.386	1.51
53)	trans-1,3-Dichlor	0.340	0.364	0.391	0.402	0.406	0.409	0.428	0.391	7.65
54)	1,1,2-Trichloroet	0.263	0.295	0.289	0.279	0.283	0.284	0.289	0.283	3.62
55)	Tetrachloroethene	0.272	0.280	0.293	0.302	0.309	0.299	0.307	0.294	4.70
56)	2-hexanone	0.170	0.180	0.203	0.194	0.206	0.211	0.208	0.196	8.04
57)	1,3-Dichloropropa	0.605	0.605	0.602	0.593	0.592	0.591	0.602	0.599	1.05
58)	Dibromochlorometh	0.254	0.312	0.303	0.296	0.299	0.304	0.315	0.298	6.92
59)	1,2-Dibromoethane	0.283	0.310	0.305	0.302	0.314	0.320	0.331	0.309	4.87
60)	1-Chlorohexane	0.464	0.467	0.465	0.505	0.517	0.509	0.535	0.495	5.83
61)P	Chlorobenzene	0.877	0.857	0.851	0.870	0.877	0.867	0.897	0.871	1.73
62)	1,1,1,2-Tetrachlo	0.264	0.284	0.283	0.282	0.281	0.279	0.288	0.280	2.74
63)C	Ethylbenzene	1.475	1.458	1.433	1.493	1.499	1.470	1.518	1.478	1.90
64)	m,p-Xylene	0.970	0.990	1.008	1.040	1.057	1.039	1.067	1.025	3.51
65)	o-Xylene	1.021	1.033	1.058	1.084	1.107	1.077	1.111	1.070	3.23
66)	Styrene	0.796	0.855	0.910	0.960	0.983	0.978	1.013	0.928	8.44
67)P	Bromoform	0.142	0.077	0.184	0.179	0.195	0.199	0.205	0.169	26.85

----- Linear regression ----- Coefficient = 0.9995
Response Ratio = -0.01246 + 0.20679 *A

68) I 1,4-Dichlorobenzene-d ----------ISTD----------

69)	Isopropylbenzene	3.394	3.422	2.803	2.838	2.780	2.731	2.618	2.941	11.11
70)	Cyclohexanone	0.023	0.030	0.027	0.025	0.026	0.029	0.027	0.027	8.23
71)S	4-Bromofluorobenz	1.169	1.004	0.864	0.853	0.853	0.860	0.845	0.921	13.32
72)	Bromobenzene	0.997	0.963	0.842	0.837	0.823	0.822	0.788	0.867	9.15
73)P	1,1,2,2-Tetrachlo	1.339	1.320	1.146	1.011	1.011	1.030	0.983	1.120	13.59
74)	Trans-1,4-Dichlor	0.143	0.182	0.177	0.182	0.188	0.192	0.192	0.179	9.42
75)	1,2,3-Trichloropr	0.257	0.296	0.253	0.232	0.230	0.236	0.225	0.247	10.10
76)	n-Propylbenzene	4.567	4.426	4.010	4.105	4.023	3.954	3.865	4.136	6.29
77)	2-Chlorotoluene	3.164	2.888	2.531	2.500	2.416	2.351	2.285	2.591	12.31
78)	4-Chlorotoluene	2.569	2.376	2.183	2.187	2.133	2.116	2.076	2.234	7.90
79)	1,3,5-Trimethylbe	2.668	2.535	2.320	2.351	2.287	2.250	2.168	2.368	7.33
80)	sec-Butylbenzene	3.329	3.252	3.038	3.232	3.150	3.042	2.937	3.140	4.47
81)	1,3-Dichlorobenze	1.316	1.426	1.364	1.413	1.441	1.419	1.422	1.400	3.16
82)	4-Isopropyltoluen	2.408	2.304	2.224	2.403	2.346	2.277	2.220	2.312	3.37
83)	1,4-Dichlorobenze	1.528	1.430	1.389	1.429	1.420	1.423	1.424	1.435	3.04
84)	tert-Butylbenzene	0.533	0.438	0.430	0.445	0.436	0.429	0.410	0.446	8.90
85)	n-Butylbenzene	1.465	1.572	1.892	2.173	2.149	2.132	2.214	1.942	15.91

----- Linear regression ----- Coefficient = 0.9997
Response Ratio = -0.08322 + 2.22219 *A

86)	1,2-Dichlorobenze	1.206	1.332	1.314	1.336	1.345	1.359	1.369	1.323	4.14
87)	1,2,4-Trimethylbe	2.566	2.449	2.311	2.410	2.354	2.310	2.242	2.377	4.53
88)	1,2-Dibromo-3-Chl	0.068	0.106	0.082	0.072	0.077	0.089	0.088	0.083	15.22

----- Linear regression ----- Coefficient = 0.9968

Initial Calibration Summary

Job Number: T16411
Account: ITTXHO Shaw E & I, Inc.
Project: Longhorn Army Ammunition Plant

Sample: VF2305-ICC2305
Lab FileID: F0078967.D

```
                Response Ratio = -0.00467 + 0.08863 *A

89)  1,2,4-Trichlorobe 0.166 0.135 0.302 0.403 0.468 0.530 0.585 0.370  47.33
            ----- Linear regression -----  Coefficient =  0.9944
                Response Ratio = -0.09820 + 0.59565 *A

90)  Hexachlorobutadie 0.058 0.088 0.170 0.207 0.204 0.208 0.202 0.162  38.83
            ----- Linear regression -----  Coefficient =  0.9993
                Response Ratio = -0.00579 + 0.20548 *A

91)  Naphthalene       0.526 0.280 0.475 0.606 0.781 0.975 1.125 0.681  43.48
          ----- Quadratic regression -----  Coefficient =  0.9974
                Response Ratio = -0.07686 + 0.74236 *A + 0.10172 *A^2

92)  1,2,3-Trichlorobe 0.167 0.113 0.217 0.276 0.334 0.389 0.421 0.274  41.95
            ----- Linear regression -----  Coefficient =  0.9938
                Response Ratio = -0.07169 + 0.43007 *A

--------------------------------------------------------------------------
(#) = Out of Range

          VF2305C.M          Thu Mar 01 07:44:03 2007
```

5.7 5

Continuing Calibration Summary

Job Number: T16411
Account: ITTXHO Shaw E & I, Inc.
Project: Longhorn Army Ammunition Plant

Sample: VF2306-CC2305
Lab FileID: F0078995.D

Evaluate Continuing Calibration Report

Data File : C:\HPCHEM\1\DATA\VF2306\F0078995.D
Acq On : 1 Mar 2007 8:23 am
Sample : cc2305-20
Misc : ms3868,vf2306,,,,5,1,water
MS Integration Params: RTEINT.P

Vial: 3
Operator: lydiaj
Inst : GC/MS F
Multiplr: 1.00

Method : C:\HPCHEM\1\METHODS\VF2305CG.M (RTE Integrator)
Title : SW846 8260B and EPA 624
Last Update : Thu Mar 01 11:28:12 2007
Response via : Multiple Level Calibration

Min. RRF : 0.001 Min. Rel. Area : 50% Max. R.T. Dev 0.50min
Max. RRF Dev : 20% Max. Rel. Area : 200%

	Compound	AvgRF	CCRF	%Dev	Area%	Dev(min)
1 I	Fluorobenzene	1.000	1.000	0.0	88	-0.01
2	Dichlorodifluoromethane	0.171	0.152	11.1	88	0.00
3 P	Chloromethane	0.329	0.325	1.2	88	0.00
4 C	Vinyl Chloride	0.286	0.274	4.2	90	-0.01
5	Bromomethane	0.225	0.219	2.7	86	-0.01
6	Chloroethane	0.217	0.214	1.4	86	0.00
7	Trichlorofluoromethane	0.155	0.152	1.9	94	0.00
8	Acrolein	0.033	0.032	3.0	92	-0.01
9 C	1,1-Dichloroethene	0.306	0.283	7.5	83	0.00
10	Freon 113	0.205	0.189	7.8	87	0.00
11	Acetone	0.056	0.048	14.3	74	0.00
12	Iodomethane	0.434	0.403	7.1	81	0.00
13	Methyl acetate	0.191	0.170	11.0	76	0.00
14	Carbon Disulfide	0.889	0.799	10.1	81	0.00
15	Methylene Chloride	0.399	0.393	1.5	85	0.00
16	Tert Butyl Alcohol	0.017	0.014	17.6	67	-0.01
17	trans-1,2-Dichloroethene	0.341	0.314	7.9	81	-0.01
18	Acrylonitrile	0.095	0.081	14.7	73	0.00
19	Methyl Tert Butyl Ether	0.581	0.533	8.3	82	0.00
20	Hexane	0.312	0.302	3.2	94	-0.01
21 P	1,1-Dichloroethane	0.440	0.438	0.5	88	0.00
22	Vinyl acetate	0.550	0.534	2.9	81	0.00
23	Di-isopropyl ether	0.971	0.992	-2.2	88	0.00
24	Ethyl tert-butyl ether	0.738	0.716	3.0	86	0.00
25	2,2-Dichloropropane	0.203	0.207	-2.0	92	0.00
26	cis-1,2-Dichloroethene	0.302	0.289	4.3	84	-0.01
27	2-Butanone	0.113	0.098	13.3	72	-0.01
28	Bromochloromethane	0.143	0.139	2.8	84	0.00
29 C	Chloroform	0.358	0.357	0.3	88	-0.01
30	Tetrahydrofuran	0.034	0.031	8.8	84	0.00
31	1,1,1-Trichloroethane	0.208	0.200	3.8	86	0.00
32 S	Dibromofluoromethane	0.218	0.214	1.8	90	0.00
33	Cyclohexane	0.439	0.415	5.5	88	0.00
34	1,1-Dichloropropene	0.302	0.283	6.3	85	-0.01
35	Carbon Tetrachloride	0.169	0.164	3.0	88	0.00
36 S	1,2-Dichloroethane-d4	0.165	0.162	1.8	86	-0.01
37	Benzene	1.108	1.070	3.4	86	0.00
38	1,2-Dichloroethane	0.198	0.207	-4.5	91	0.00
39	tert-amyl methyl ether	0.757	0.696	8.1	81	0.00
40	Trichloroethene	0.226	0.213	5.8	86	0.00
41	Methylcyclohexane	0.364	0.329	9.6	87	0.00
42 C	1,2-Dichloropropane	0.314	0.306	2.5	87	0.00

Continuing Calibration Summary

Job Number: T16411
Account: ITTXHO Shaw E & I, Inc.
Project: Longhorn Army Ammunition Plant

Sample: VF2306-CC2305
Lab FileID: F0078995.D

43		Dibromomethane	0.158	0.161	-1.9	84	-0.01
44		1,4-Dioxane	0.002	0.002	0.0	79	-0.02
45		Bromodichloromethane	0.304	0.296	2.6	87	0.00
46		2-Nitropropane	0.040	0.035	12.5	75	0.00
47		2-Chloroethyl vinyl ether	0.125	0.095	24.0#	69	0.00
48		4-Methyl-2-pentanone	0.240	0.215	10.4	76	-0.01
49		cis-1,3-Dichloropropene	0.421	0.416	1.2	87	0.00
50	I	Chlorobenzene-d5	1.000	1.000	0.0	90	0.00
51	S	Toluene-d8	1.098	1.054	4.0	90	0.00
52	C	Toluene	1.386	1.315	5.1	87	0.00
53		trans-1,3-Dichloropropene	0.391	0.366	6.4	85	0.00
54		1,1,2-Trichloroethane	0.283	0.265	6.4	83	0.00
55		Tetrachloroethene	0.294	0.285	3.1	88	-0.01
56		2-hexanone	0.196	0.165	15.8	73	0.00
57		1,3-Dichloropropane	0.599	0.560	6.5	84	0.00
58		Dibromochloromethane	0.298	0.283	5.0	84	0.00
59		1,2-Dibromoethane	0.309	0.278	10.0	82	0.00
60		1-Chlorohexane	0.495	0.444	10.3	86	-0.01
61	P	Chlorobenzene	0.871	0.844	3.1	90	-0.01
62		1,1,1,2-Tetrachloroethane	0.280	0.275	1.8	88	-0.01
63	C	Ethylbenzene	1.478	1.399	5.3	88	-0.01
64		m,p-Xylene	1.025	0.993	3.1	89	-0.01
65		o-Xylene	1.070	1.039	2.9	89	-0.01
66		Styrene	0.928	0.889	4.2	88	0.00
67	P	Bromoform	0.169	0.154	8.9	76	-0.01
68	I	1,4-Dichlorobenzene-d4	1.000	1.000	0.0	85	0.00
69		Isopropylbenzene	2.941	2.895	1.6	88	0.00
70		Cyclohexanone	0.027	0.049	-81.5#	155	-0.02
71	S	4-Bromofluorobenzene	0.921	0.906	1.6	89	0.00
72		Bromobenzene	0.867	0.893	-3.0	90	0.00
73	P	1,1,2,2-Tetrachloroethane	1.120	1.016	9.3	75	0.00
74		Trans-1,4-Dichloro-2-Butene	0.179	0.156	12.8	75	-0.01
75		1,2,3-Trichloropropane	0.247	0.237	4.0	80	-0.01
76		n-Propylbenzene	4.136	4.044	2.2	86	0.00
77		2-Chlorotoluene	2.591	2.595	-0.2	87	0.00
78		4-Chlorotoluene	2.234	2.210	1.1	86	-0.01
79		1,3,5-Trimethylbenzene	2.368	2.371	-0.1	87	0.00
80		sec-Butylbenzene	3.140	3.061	2.5	86	0.00
81		1,3-Dichlorobenzene	1.400	1.423	-1.6	89	0.00
82		4-Isopropyltoluene	2.312	2.227	3.7	85	0.00
83		1,4-Dichlorobenzene	1.435	1.395	2.8	85	0.00
84		tert-Butylbenzene	0.446	0.416	6.7	82	-0.01
85		n-Butylbenzene	1.942	1.782	8.2	80	0.00
86		1,2-Dichlorobenzene	1.323	1.297	2.0	84	-0.01
87		1,2,4-Trimethylbenzene	2.377	2.379	-0.1	88	0.00
88		1,2-Dibromo-3-Chloropropane	0.083	0.069	16.9	71	-0.02
89		1,2,4-Trichlorobenzene	0.370	0.253	31.6#	71	0.00
90		Hexachlorobutadiene	0.162	0.147	9.3	74	-0.02
91		Naphthalene	0.681	0.379	44.3#	68	0.00
92		1,2,3-Trichlorobenzene	0.274	0.174	36.5#	68	0.00

Average % D = 7.6

(#) = Out of Range
F0078966.D VF2305CG.M

SPCC's out = 0 CCC's out = 0
Fri Mar 02 07:49:36 2007

5.7 5

Continuing Calibration Summary

Job Number: T16411
Account: ITTXHO Shaw E & I, Inc.
Project: Longhorn Army Ammunition Plant

Sample: VF2306-CC2276
Lab FileID: F0078996.D

Evaluate Continuing Calibration Report

Data File : C:\HPCHEM\1\DATA\VF2306\F0078996.D Vial: 4
Acq On : 1 Mar 2007 8:55 am Operator: lydiaj
Sample : cc2276-1000 Inst : GC/MS F
Misc : ms3868,vf2306,,,,5,1,water Multiplr: 1.00
MS Integration Params: RTEINT.P

Method : C:\HPCHEM\1\METHODS\VF2305CG.M (RTE Integrator)
Title : SW846 8260B and EPA 624
Last Update : Thu Mar 01 11:28:12 2007
Response via : Multiple Level Calibration

Min. RRF : 0.001 Min. Rel. Area : 50% Max. R.T. Dev 0.50min
Max. RRF Dev : 20% Max. Rel. Area : 200%

		Compound	AvgRF	CCRF	%Dev	Area%	Dev(min)
1	I	Fluorobenzene	1.000	1.000	0.0	92	-0.01
32	S	Dibromofluoromethane	0.218	0.547	-150.9#	239#	0.00
36	S	1,2-Dichloroethane-d4	0.165	0.404	-144.8#	223#	-0.01
50	I	Chlorobenzene-d5	1.000	1.000	0.0	92	0.00
51	S	Toluene-d8	1.098	2.827	-157.5#	244#	0.00
68	I	1,4-Dichlorobenzene-d4	1.000	1.000	0.0	85	0.00
71	S	4-Bromofluorobenzene	0.921	2.369	-157.2#	233#	-0.01
93	I	1,4-Dichlorobenzene-d4a	1.000	1.000	0.0	60	0.02
94	H	TPH-GRO (C6-C10)	6.436	7.083	-10.1	73	0.49

Average % D = 87.6

(#) = Out of Range SPCC's out = 5 CCC's out = 5
F0078966.D VF2305CG.M Fri Mar 02 07:49:41 2007

5.1

Continuing Calibration Summary

Job Number: T16411
Account: ITTXHO Shaw E & I, Inc.
Project: Longhorn Army Ammunition Plant

Sample: VF2307-CC2305
Lab FileID: F0079024.D

Evaluate Continuing Calibration Report

Data File : C:\HPCHEM\1\DATA\VF2306\F0079024.D
Acq On : 1 Mar 2007 11:47 pm
Sample : cc2305-20
Misc : ms3874,vf2307,,,,5,1,water
MS Integration Params: RTEINT.P

Vial: 32
Operator: lydiaj
Inst : GC/MS F
Multiplr: 1.00

Method : C:\HPCHEM\1\METHODS\VF2305C.M (RTE Integrator)
Title : SW846 8260B and EPA 624
Last Update : Thu Mar 01 07:29:02 2007
Response via : Multiple Level Calibration

Min. RRF : 0.001 Min. Rel. Area : 50% Max. R.T. Dev 0.50min
Max. RRF Dev : 20% Max. Rel. Area : 200%

	Compound	AvgRF	CCRF	%Dev	Area%	Dev(min)
1 I	Fluorobenzene	1.000	1.000	0.0	82	-0.05
2	Dichlorodifluoromethane	0.171	0.156	8.8	84	-0.03
3 P	Chloromethane	0.329	0.359	-9.1	91	-0.04
4 C	Vinyl Chloride	0.286	0.302	-5.6	93	-0.05
5	Bromomethane	0.225	0.241	-7.1	89	-0.05
6	Chloroethane	0.217	0.226	-4.1	85	-0.04
7	Trichlorofluoromethane	0.155	0.165	-6.5	96	-0.05
8	Acrolein	0.033	0.029	12.1	78	-0.05
9 C	1,1-Dichloroethene	0.306	0.299	2.3	82	-0.05
10	Freon 113	0.205	0.193	5.9	83	-0.05
11	Acetone	0.056	0.050	10.7	71	-0.04
12	Iodomethane	0.434	0.434	0.0	81	-0.05
13	Methyl acetate	0.191	0.186	2.6	78	-0.05
14	Carbon Disulfide	0.889	0.858	3.5	81	-0.05
15	Methylene Chloride	0.399	0.413	-3.5	83	-0.05
16	Tert Butyl Alcohol	0.017	0.016	5.9	73	-0.05
17	trans-1,2-Dichloroethene	0.341	0.345	-1.2	84	-0.05
18	Acrylonitrile	0.095	0.086	9.5	73	-0.04
19	Methyl Tert Butyl Ether	0.581	0.573	1.4	82	-0.04
20	Hexane	0.312	0.281	9.9	82	-0.05
21 P	1,1-Dichloroethane	0.440	0.457	-3.9	86	-0.05
22	Vinyl acetate	0.550	0.554	-0.7	78	-0.05
23	Di-isopropyl ether	0.971	1.076	-10.8	89	-0.04
24	Ethyl tert-butyl ether	0.738	0.769	-4.2	86	-0.04
25	2,2-Dichloropropane	0.203	0.176	13.3	73	-0.04
26	cis-1,2-Dichloroethene	0.302	0.309	-2.3	84	-0.06
27	2-Butanone	0.113	0.107	5.3	74	-0.05
28	Bromochloromethane	0.143	0.144	-0.7	81	-0.05
29 C	Chloroform	0.358	0.366	-2.2	84	-0.05
30	Tetrahydrofuran	0.034	0.033	2.9	84	-0.05
31	1,1,1-Trichloroethane	0.208	0.215	-3.4	87	-0.05
32 S	Dibromofluoromethane	0.218	0.235	-7.8	92	-0.05
33	Cyclohexane	0.439	0.440	-0.2	88	-0.05
34	1,1-Dichloropropene	0.302	0.299	1.0	84	-0.05
35	Carbon Tetrachloride	0.169	0.171	-1.2	86	-0.04
36 S	1,2-Dichloroethane-d4	0.165	0.171	-3.6	85	-0.05
37	Benzene	1.108	1.138	-2.7	86	-0.04
38	1,2-Dichloroethane	0.198	0.208	-5.1	86	-0.05
39	tert-amyl methyl ether	0.757	0.761	-0.5	82	-0.05
40	Trichloroethene	0.226	0.226	0.0	85	-0.05
41	Methylcyclohexane	0.364	0.348	4.4	86	-0.05
42 C	1,2-Dichloropropane	0.314	0.324	-3.2	86	-0.05

Continuing Calibration Summary

Job Number: T16411
Account: ITTXHO Shaw E & I, Inc.
Project: Longhorn Army Ammunition Plant

Sample: VF2307-CC2305
Lab FileID: F0079024.D

43		Dibromomethane	0.158	0.159	-0.6	78	-0.05
44		1,4-Dioxane	0.002	0.002	0.0	77	-0.06
45		Bromodichloromethane	0.304	0.315	-3.6	87	-0.04
46		2-Nitropropane	0.040	0.037	7.5	76	-0.05
47		2-Chloroethyl vinyl ether	0.125	0.100	20.0	68	-0.05
48		4-Methyl-2-pentanone	0.240	0.240	0.0	79	-0.05
49		cis-1,3-Dichloropropene	0.421	0.422	-0.2	83	-0.05
50	I	Chlorobenzene-d5	1.000	1.000	0.0	85	-0.05
51	S	Toluene-d8	1.098	1.097	0.1	88	-0.05
52	C	Toluene	1.386	1.387	-0.1	87	-0.05
53		trans-1,3-Dichloropropene	0.391	0.368	5.9	80	-0.04
54		1,1,2-Trichloroethane	0.283	0.281	0.7	83	-0.05
55		Tetrachloroethene	0.294	0.293	0.3	85	-0.06
56		2-hexanone	0.196	0.178	9.2	75	-0.05
57		1,3-Dichloropropane	0.599	0.577	3.7	82	-0.05
58		Dibromochloromethane	0.298	0.299	-0.3	84	-0.05
59		1,2-Dibromoethane	0.309	0.286	7.4	80	-0.05
60		1-Chlorohexane	0.495	0.467	5.7	85	-0.05
61	P	Chlorobenzene	0.871	0.873	-0.2	87	-0.05
62		1,1,1,2-Tetrachloroethane	0.280	0.284	-1.4	85	-0.05
63	C	Ethylbenzene	1.478	1.474	0.3	88	-0.05
64		m,p-Xylene	1.025	1.000	2.4	84	-0.05
65		o-Xylene	1.070	1.073	-0.3	86	-0.05
66		Styrene	0.928	0.907	2.3	85	-0.05
67	P	Bromoform	0.169	0.156	7.7	72	-0.05
68	I	1,4-Dichlorobenzene-d4	1.000	1.000	0.0	80	-0.05
69		Isopropylbenzene	2.941	2.954	-0.4	85	-0.05
70		Cyclohexanone	0.027	0.043	-59.3#	126	-0.05
71	S	4-Bromofluorobenzene	0.921	0.929	-0.9	86	-0.06
72		Bromobenzene	0.867	0.917	-5.8	87	-0.06
73	P	1,1,2,2-Tetrachloroethane	1.120	1.066	4.8	75	-0.05
74		Trans-1,4-Dichloro-2-Butene	0.179	0.153	14.5	70	-0.06
75		1,2,3-Trichloropropane	0.247	0.238	3.6	75	-0.06
76		n-Propylbenzene	4.136	4.222	-2.1	84	-0.06
77		2-Chlorotoluene	2.591	2.718	-4.9	86	-0.05
78		4-Chlorotoluene	2.234	2.258	-1.1	83	-0.06
79		1,3,5-Trimethylbenzene	2.368	2.402	-1.4	83	-0.05
80		sec-Butylbenzene	3.140	3.138	0.1	83	-0.05
81		1,3-Dichlorobenzene	1.400	1.441	-2.9	85	-0.06
82		4-Isopropyltoluene	2.312	2.241	3.1	81	-0.05
83		1,4-Dichlorobenzene	1.435	1.376	4.1	79	-0.06
84		tert-Butylbenzene	0.446	0.445	0.2	83	-0.06
85		n-Butylbenzene	1.942	1.808	6.9	77	-0.06
86		1,2-Dichlorobenzene	1.323	1.301	1.7	79	-0.06
87		1,2,4-Trimethylbenzene	2.377	2.423	-1.9	84	-0.05
88		1,2-Dibromo-3-Chloropropane	0.083	0.068	18.1	66	-0.05
89		1,2,4-Trichlorobenzene	0.370	0.235	36.5#	62	-0.06
90		Hexachlorobutadiene	0.162	0.081	50.0#	38#	-0.06
91		Naphthalene	0.681	0.366	46.3#	62	-0.06
92		1,2,3-Trichlorobenzene	0.274	0.175	36.1#	65	-0.06

Average % D = 6.5

(#) = Out of Range
F0078966.D VF2305C.M

SPCC's out = 0 CCC's out = 0
Fri Mar 02 08:30:25 2007

5.7 5

Continuing Calibration Summary

Job Number: T16411
Account: ITTXHO Shaw E & I, Inc.
Project: Longhorn Army Ammunition Plant

Sample: VF2309-CC2305
Lab FileID: F0079055.D

Evaluate Continuing Calibration Report

Data File : C:\HPCHEM\1\DATA\VF2309\F0079055.D
Acq On : 3 Mar 2007 9:18 am
Sample : cc2305-40
Misc : ms3874,vf2309,,,,5,1,water
MS Integration Params: RTEINT.P

Vial: 2
Operator: richardr
Inst : GC/MS F
Multiplr: 1.00

Method : C:\HPCHEM\1\METHODS\VF2305C.M (RTE Integrator)
Title : SW846 8260B and EPA 624
Last Update : Thu Mar 01 07:31:12 2007
Response via : Multiple Level Calibration

Min. RRF : 0.001 Min. Rel. Area : 50% Max. R.T. Dev 0.50min
Max. RRF Dev : 20% Max. Rel. Area : 200%

		Compound	AvgRF	CCRF	%Dev	Area%	Dev(min)
1	I	Fluorobenzene	1.000	1.000	0.0	105	-0.09
2		Dichlorodifluoromethane	0.171	0.158	7.6	97	-0.05
3	P	Chloromethane	0.329	0.286	13.1	97	-0.05
4	C	Vinyl Chloride	0.286	0.252	11.9	95	-0.07
5		Bromomethane	0.225	0.200	11.1	98	-0.07
6		Chloroethane	0.217	0.212	2.3	101	-0.06
7		Trichlorofluoromethane	0.155	0.159	-2.6	105	-0.07
8		Acrolein	0.033	0.033	0.0	99	-0.08
9	C	1,1-Dichloroethene	0.306	0.286	6.5	94	-0.07
10		Freon 113	0.205	0.208	-1.5	97	-0.07
11		Acetone	0.056	0.036	35.7#	73	-0.07
12		Iodomethane	0.434	0.425	2.1	103	-0.08
13		Methyl acetate	0.191	0.126	34.0#	74	-0.08
14		Carbon Disulfide	0.889	0.880	1.0	102	-0.09
15		Methylene Chloride	0.399	0.363	9.0	94	-0.08
16		Tert Butyl Alcohol	0.017	0.012	29.4#	82	-0.08
17		trans-1,2-Dichloroethene	0.341	0.320	6.2	98	-0.08
18		Acrylonitrile	0.095	0.064	32.6#	73	-0.08
19		Methyl Tert Butyl Ether	0.581	0.478	17.7	91	-0.08
20		Hexane	0.312	0.322	-3.2	99	-0.08
21	P	1,1-Dichloroethane	0.440	0.433	1.6	102	-0.08
22		Vinyl acetate	0.550	0.430	21.8#	80	-0.08
23		Di-isopropyl ether	0.971	0.931	4.1	100	-0.07
24		Ethyl tert-butyl ether	0.738	0.686	7.0	98	-0.07
25		2,2-Dichloropropane	0.203	0.232	-14.3	116	-0.08
26		cis-1,2-Dichloroethene	0.302	0.303	-0.3	103	-0.09
27		2-Butanone	0.113	0.075	33.6#	75	-0.08
28		Bromochloromethane	0.143	0.136	4.9	98	-0.08
29	C	Chloroform	0.358	0.356	0.6	104	-0.08
30		Tetrahydrofuran	0.034	0.023	32.4#	83	-0.09
31		1,1,1-Trichloroethane	0.208	0.213	-2.4	105	-0.08
32	S	Dibromofluoromethane	0.218	0.226	-3.7	110	-0.08
33		Cyclohexane	0.439	0.449	-2.3	99	-0.08
34		1,1-Dichloropropene	0.302	0.310	-2.6	104	-0.09
35		Carbon Tetrachloride	0.169	0.173	-2.4	103	-0.08
36	S	1,2-Dichloroethane-d4	0.165	0.148	10.3	97	-0.09
37		Benzene	1.108	1.097	1.0	104	-0.08
38		1,2-Dichloroethane	0.198	0.180	9.1	92	-0.08
39		tert-amyl methyl ether	0.757	0.674	11.0	96	-0.08
40		Trichloroethene	0.226	0.229	-1.3	105	-0.09
41		Methylcyclohexane	0.364	0.374	-2.7	100	-0.08
42	C	1,2-Dichloropropane	0.314	0.307	2.2	102	-0.09

Continuing Calibration Summary

Job Number: T16411
Account: ITTXHO Shaw E & I, Inc.
Project: Longhorn Army Ammunition Plant

Sample: VF2309-CC2305
Lab FileID: F0079055.D

43		Dibromomethane	0.158	0.136	13.9	89	-0.09
44		1,4-Dioxane	0.002	0.002	0.0	81	-0.09
45		Bromodichloromethane	0.304	0.295	3.0	101	-0.08
46		2-Nitropropane	0.040	0.026	35.0#	73	-0.08
47		2-Chloroethyl vinyl ether	0.125	0.084	32.8#	71	-0.08
48		4-Methyl-2-pentanone	0.240	0.173	27.9#	78	-0.09
49		cis-1,3-Dichloropropene	0.421	0.416	1.2	102	-0.08
50	I	Chlorobenzene-d5	1.000	1.000	0.0	106	-0.08
51	S	Toluene-d8	1.098	1.115	-1.5	110	-0.08
52	C	Toluene	1.386	1.388	-0.1	106	-0.09
53		trans-1,3-Dichloropropene	0.391	0.354	9.5	94	-0.08
54		1,1,2-Trichloroethane	0.283	0.238	15.9	91	-0.09
55		Tetrachloroethene	0.294	0.307	-4.4	108	-0.09
56		2-hexanone	0.196	0.135	31.1#	74	-0.08
57		1,3-Dichloropropane	0.599	0.499	16.7	89	-0.08
58		Dibromochloromethane	0.298	0.267	10.4	96	-0.09
59		1,2-Dibromoethane	0.309	0.246	20.4#	87	-0.09
60		1-Chlorohexane	0.495	0.507	-2.4	107	-0.09
61	P	Chlorobenzene	0.871	0.862	1.0	105	-0.09
62		1,1,1,2-Tetrachloroethane	0.280	0.275	1.8	104	-0.09
63	C	Ethylbenzene	1.478	1.482	-0.3	105	-0.09
64		m,p-Xylene	1.025	1.035	-1.0	106	-0.09
65		o-Xylene	1.070	1.092	-2.1	107	-0.09
66		Styrene	0.928	0.918	1.1	102	-0.08
67	P	Bromoform	0.169	0.154	8.9	91	-0.09
68	I	1,4-Dichlorobenzene-d4	1.000	1.000	0.0	98	-0.09
69		Isopropylbenzene	2.941	3.034	-3.2	105	-0.08
70		Cyclohexanone	0.027	0.059	-118.5#	229#	-0.10
71	S	4-Bromofluorobenzene	0.921	0.928	-0.8	106	-0.09
72		Bromobenzene	0.867	0.876	-1.0	102	-0.10
73	P	1,1,2,2-Tetrachloroethane	1.120	0.827	26.2#	80	-0.09
74		Trans-1,4-Dichloro-2-Butene	0.179	0.141	21.2#	76	-0.10
75		1,2,3-Trichloropropane	0.247	0.190	23.1#	80	-0.10
76		n-Propylbenzene	4.136	4.329	-4.7	103	-0.09
77		2-Chlorotoluene	2.591	2.651	-2.3	104	-0.09
78		4-Chlorotoluene	2.234	2.272	-1.7	102	-0.10
79		1,3,5-Trimethylbenzene	2.368	2.468	-4.2	103	-0.09
80		sec-Butylbenzene	3.140	3.262	-3.9	99	-0.09
81		1,3-Dichlorobenzene	1.400	1.421	-1.5	98	-0.10
82		4-Isopropyltoluene	2.312	2.390	-3.4	97	-0.09
83		1,4-Dichlorobenzene	1.435	1.372	4.4	94	-0.10
84		tert-Butylbenzene	0.446	0.438	1.8	96	-0.10
85		n-Butylbenzene	1.942	2.042	-5.1	92	-0.10
86		1,2-Dichlorobenzene	1.323	1.241	6.2	91	-0.09
87		1,2,4-Trimethylbenzene	2.377	2.449	-3.0	100	-0.09
88		1,2-Dibromo-3-Chloropropane	0.083	0.046	44.6#	62	-0.09
89		1,2,4-Trichlorobenzene	0.370	0.230	37.8#	56	-0.10
90		Hexachlorobutadiene	0.162	0.184	-13.6	87	-0.10
91		Naphthalene	0.681	0.268	60.6#	43#	-0.12
92		1,2,3-Trichlorobenzene	0.274	0.133	51.5#	47#	-0.12

Average % D = 12.2

(#) = Out of Range SPCC's out = 0 CCC's out = 0
F0078967.D VF2305C.M Mon Mar 05 09:22:40 2007

5.7 5

Continuing Calibration Summary

Job Number: T16411
Account: ITTXHO Shaw E & I, Inc.
Project: Longhorn Army Ammunition Plant

Sample: VF2311-CC2305
Lab FileID: F0079091.D

Evaluate Continuing Calibration Report

Data File : C:\HPCHEM\1\DATA\VF2311\F0079091.D
Acq On : 5 Mar 2007 1:28 pm
Sample : cc2305-40
Misc : ms3876,vf2311,,,,5,1,water
MS Integration Params: RTEINT.P

Vial: 3
Operator: lydiaj
Inst : GC/MS F
Multiplr: 1.00

Method : C:\HPCHEM\1\METHODS\VF2305C.M (RTE Integrator)
Title : SW846 8260B and EPA 624
Last Update : Thu Mar 01 07:31:12 2007
Response via : Multiple Level Calibration

Min. RRF : 0.001 Min. Rel. Area : 50% Max. R.T. Dev 0.50min
Max. RRF Dev : 20% Max. Rel. Area : 200%

		Compound	AvgRF	CCRF	%Dev	Area%	Dev(min)
1	I	Fluorobenzene	1.000	1.000	0.0	109	-0.11
2		Dichlorodifluoromethane	0.171	0.156	8.8	99	-0.07
3	P	Chloromethane	0.329	0.269	18.2	94	-0.07
4	C	Vinyl Chloride	0.286	0.234	18.2	91	-0.09
5		Bromomethane	0.225	0.198	12.0	100	-0.10
6		Chloroethane	0.217	0.218	-0.5	107	-0.09
7		Trichlorofluoromethane	0.155	0.171	-10.3	117	-0.09
8		Acrolein	0.033	0.033	0.0	100	-0.11
9	C	1,1-Dichloroethene	0.306	0.299	2.3	102	-0.10
10		Freon 113	0.205	0.214	-4.4	103	-0.10
11		Acetone	0.056	0.048	14.3	101	-0.10
12		Iodomethane	0.434	0.444	-2.3	110	-0.11
13		Methyl acetate	0.191	0.163	14.7	99	-0.10
14		Carbon Disulfide	0.889	0.884	0.6	106	-0.10
15		Methylene Chloride	0.399	0.376	5.8	101	-0.11
16		Tert Butyl Alcohol	0.017	0.016	5.9	110	-0.11
17		trans-1,2-Dichloroethene	0.341	0.337	1.2	106	-0.10
18		Acrylonitrile	0.095	0.089	6.3	106	-0.10
19		Methyl Tert Butyl Ether	0.581	0.559	3.8	109	-0.11
20		Hexane	0.312	0.310	0.6	99	-0.11
21	P	1,1-Dichloroethane	0.440	0.425	3.4	104	-0.11
22		Vinyl acetate	0.550	0.508	7.6	98	-0.11
23		Di-isopropyl ether	0.971	0.910	6.3	101	-0.10
24		Ethyl tert-butyl ether	0.738	0.722	2.2	106	-0.10
25		2,2-Dichloropropane	0.203	0.208	-2.5	108	-0.11
26		cis-1,2-Dichloroethene	0.302	0.309	-2.3	109	-0.11
27		2-Butanone	0.113	0.096	15.0	99	-0.11
28		Bromochloromethane	0.143	0.148	-3.5	110	-0.11
29	C	Chloroform	0.358	0.363	-1.4	109	-0.11
30		Tetrahydrofuran	0.034	0.029	14.7	106	-0.10
31		1,1,1-Trichloroethane	0.208	0.214	-2.9	109	-0.11
32	S	Dibromofluoromethane	0.218	0.232	-6.4	116	-0.11
33		Cyclohexane	0.439	0.449	-2.3	102	-0.11
34		1,1-Dichloropropene	0.302	0.309	-2.3	107	-0.11
35		Carbon Tetrachloride	0.169	0.173	-2.4	107	-0.11
36	S	1,2-Dichloroethane-d4	0.165	0.169	-2.4	114	-0.11
37		Benzene	1.108	1.109	-0.1	108	-0.11
38		1,2-Dichloroethane	0.198	0.201	-1.5	106	-0.11
39		tert-amyl methyl ether	0.757	0.756	0.1	112	-0.11
40		Trichloroethene	0.226	0.232	-2.7	110	-0.11
41		Methylcyclohexane	0.364	0.381	-4.7	106	-0.11
42	C	1,2-Dichloropropane	0.314	0.311	1.0	107	-0.11

Continuing Calibration Summary

Job Number: T16411
Account: ITTXHO Shaw E & I, Inc.
Project: Longhorn Army Ammunition Plant

Sample: VF2311-CC2305
Lab FileID: F0079091.D

43		Dibromomethane	0.158	0.162	-2.5	110	-0.11
44		1,4-Dioxane	0.002	0.002	0.0	120	-0.11
45		Bromodichloromethane	0.304	0.305	-0.3	108	-0.11
46		2-Nitropropane	0.040	0.034	15.0	100	-0.11
47		2-Chloroethyl vinyl ether	0.125	0.114	8.8	100	-0.11
48		4-Methyl-2-pentanone	0.240	0.215	10.4	100	-0.11
49		cis-1,3-Dichloropropene	0.421	0.443	-5.2	113	-0.11
50	I	Chlorobenzene-d5	1.000	1.000	0.0	112	-0.11
51	S	Toluene-d8	1.098	1.122	-2.2	117	-0.11
52	C	Toluene	1.386	1.362	1.7	110	-0.11
53		trans-1,3-Dichloropropene	0.391	0.391	0.0	109	-0.11
54		1,1,2-Trichloroethane	0.283	0.274	3.2	110	-0.11
55		Tetrachloroethene	0.294	0.299	-1.7	111	-0.12
56		2-hexanone	0.196	0.170	13.3	99	-0.11
57		1,3-Dichloropropane	0.599	0.566	5.5	107	-0.11
58		Dibromochloromethane	0.298	0.295	1.0	112	-0.11
59		1,2-Dibromoethane	0.309	0.301	2.6	112	-0.11
60		1-Chlorohexane	0.495	0.508	-2.6	113	-0.11
61	P	Chlorobenzene	0.871	0.878	-0.8	113	-0.11
62		1,1,1,2-Tetrachloroethane	0.280	0.277	1.1	111	-0.11
63	C	Ethylbenzene	1.478	1.468	0.7	110	-0.11
64		m,p-Xylene	1.025	1.025	0.0	111	-0.11
65		o-Xylene	1.070	1.076	-0.6	111	-0.11
66		Styrene	0.928	0.938	-1.1	110	-0.11
67	P	Bromoform	0.169	0.182	-7.7	115	-0.12
68	I	1,4-Dichlorobenzene-d4	1.000	1.000	0.0	110	-0.12
69		Isopropylbenzene	2.941	2.831	3.7	110	-0.11
70		Cyclohexanone	0.027	0.068	-151.9#	297#	-0.13
71	S	4-Bromofluorobenzene	0.921	0.921	0.0	119	-0.12
72		Bromobenzene	0.867	0.834	3.8	110	-0.13
73	P	1,1,2,2-Tetrachloroethane	1.120	1.003	10.4	109	-0.12
74		Trans-1,4-Dichloro-2-Butene	0.179	0.172	3.9	104	-0.13
75		1,2,3-Trichloropropane	0.247	0.232	6.1	110	-0.13
76		n-Propylbenzene	4.136	4.135	0.0	111	-0.12
77		2-Chlorotoluene	2.591	2.507	3.2	110	-0.12
78		4-Chlorotoluene	2.234	2.173	2.7	109	-0.12
79		1,3,5-Trimethylbenzene	2.368	2.349	0.8	110	-0.11
80		sec-Butylbenzene	3.140	3.184	-1.4	109	-0.12
81		1,3-Dichlorobenzene	1.400	1.409	-0.6	110	-0.13
82		4-Isopropyltoluene	2.312	2.378	-2.9	109	-0.12
83		1,4-Dichlorobenzene	1.435	1.404	2.2	108	-0.12
84		tert-Butylbenzene	0.446	0.446	0.0	110	-0.13
85		n-Butylbenzene	1.942	2.118	-9.1	107	-0.13
86		1,2-Dichlorobenzene	1.323	1.313	0.8	108	-0.12
87		1,2,4-Trimethylbenzene	2.377	2.385	-0.3	109	-0.12
88		1,2-Dibromo-3-Chloropropane	0.083	0.069	16.9	105	-0.12
89		1,2,4-Trichlorobenzene	0.370	0.377	-1.9	103	-0.13
90		Hexachlorobutadiene	0.162	0.218	-34.6#	116	-0.14
91		Naphthalene	0.681	0.547	19.7	100	-0.15
92		1,2,3-Trichlorobenzene	0.274	0.270	1.5	108	-0.14

Average % D = 6.6

(#) = Out of Range SPCC's out = 0 CCC's out = 0
F0078967.D VF2305C.M Tue Mar 06 07:56:28 2007

5.7 5

General Chemistry

QC Data Summaries

Includes the following where applicable:

- Method Blank and Blank Spike Summaries
- Duplicate Summaries
- Matrix Spike Summaries
- Instrument Runlogs/QC

METHOD BLANK AND SPIKE RESULTS SUMMARY
GENERAL CHEMISTRY

Login Number: T16411
Account: ITTXHO - Shaw E & I, Inc.
Project: Longhorn Army Ammunition Plant

Analyte	Batch ID	RL	MB Result	Units	Spike Amount	BSP Result	BSP %Recov	QC Limits
Alkalinity, Total as CaCO3	GN11336	5.0	<5.0	mg/l	xxxxxxxx	2500	100.0	80-120%
Chloride	GN11331	1.0	<1.0	mg/l	xxxxxxxx	1030	103.0	92-107%
Nitrogen, Nitrate + Nitrite	GN11291	0.050	<0.050	mg/l	0.500	0.51	102.0	89-112%
Nitrogen, Nitrite	GN11283	0.050	<0.050	mg/l	0.500	0.52	104.0	89-117%
Sulfate	GN11356			mg/l	100	95.0	95.0	80-120%
Sulfate	GN11356	10	<10	mg/l	xxxxxxxx		*	80-120%
Sulfate	GN11528	3.0	<3.0	mg/l	xxxxxxxx	88.0	88.0	80-120%
Sulfide	GN11286	0.20	<0.20	mg/l	1600	1370	86.0	80-120%
Total Organic Carbon	GN11296	1.0	<1.0	mg/l	25.0	25.0	100.0	83-110%
Total Organic Carbon	GN11304	1.0	<1.0	mg/l	25.0	26.0	104.0	83-110%

Associated Samples:
Batch GN11283: T16411-1, T16411-10, T16411-2, T16411-3, T16411-4, T16411-5, T16411-6, T16411-7, T16411-8, T16411-9
Batch GN11286: T16411-1, T16411-10, T16411-2, T16411-3, T16411-4, T16411-5, T16411-6, T16411-7, T16411-8, T16411-9
Batch GN11291: T16411-1, T16411-10, T16411-2, T16411-3, T16411-4, T16411-5, T16411-6, T16411-7, T16411-8, T16411-9
Batch GN11296: T16411-1, T16411-10, T16411-2, T16411-3, T16411-4, T16411-5, T16411-6, T16411-7
Batch GN11304: T16411-8, T16411-9
Batch GN11331: T16411-1, T16411-10, T16411-2, T16411-3, T16411-4, T16411-5, T16411-6, T16411-7, T16411-8, T16411-9
Batch GN11336: T16411-1, T16411-10, T16411-2, T16411-3, T16411-4, T16411-5, T16411-6, T16411-7, T16411-8, T16411-9
Batch GN11356: T16411-1, T16411-10, T16411-3, T16411-4, T16411-5, T16411-6, T16411-7, T16411-8, T16411-9
Batch GN11528: T16411-2
(*) Outside of QC limits

6.1

DUPLICATE RESULTS SUMMARY
GENERAL CHEMISTRY

Login Number: T16411
Account: ITTXHO - Shaw E & I, Inc.
Project: Longhorn Army Ammunition Plant

Analyte	Batch ID	QC Sample	Units	Original Result	DUP Result	RPD	QC Limits
Alkalinity, Total as CaCO3	GN11336	T16411-10	mg/l	158	165	4.3	0-10%
Nitrogen, Nitrate + Nitrite	GN11291	T16411-10	mg/l	0.20	0.20	0.0	0-10%
Nitrogen, Nitrite	GN11283	T16411-10	mg/l	0.010 B	<0.050	0.0	0-10%
Sulfate	GN11356	T16411-10	mg/l	1260	1200	4.7	0-20%
Sulfate	GN11528	T16728-2	mg/l	23.0	23.0	11.0	0-20%
Sulfide	GN11286	T16411-10	mg/l	U	<0.20	0.0	0-20%
Total Organic Carbon	GN11296	T16411-10	mg/l	18.0	18.0	0.0	0-11%
Total Organic Carbon	GN11304	T16445-18	mg/l	6.0	6.0	0.0	0-11%
pH	GN11285	T16411-10	su	6.5	6.5	0.0	0-6.8%

Associated Samples:
Batch GN11283: T16411-1, T16411-10, T16411-2, T16411-3, T16411-4, T16411-5, T16411-6, T16411-7, T16411-8, T16411-9
Batch GN11285: T16411-1, T16411-10, T16411-2, T16411-3, T16411-4, T16411-5, T16411-6, T16411-7, T16411-8, T16411-9
Batch GN11286: T16411-1, T16411-10, T16411-2, T16411-3, T16411-4, T16411-5, T16411-6, T16411-7, T16411-8, T16411-9
Batch GN11291: T16411-1, T16411-10, T16411-2, T16411-3, T16411-4, T16411-5, T16411-6, T16411-7, T16411-8, T16411-9
Batch GN11296: T16411-1, T16411-10, T16411-2, T16411-3, T16411-4, T16411-5, T16411-6, T16411-7
Batch GN11304: T16411-8, T16411-9
Batch GN11331: T16411-1, T16411-10, T16411-2, T16411-3, T16411-4, T16411-5, T16411-6, T16411-7, T16411-8, T16411-9
Batch GN11336: T16411-1, T16411-10, T16411-2, T16411-3, T16411-4, T16411-5, T16411-6, T16411-7, T16411-8, T16411-9
Batch GN11356: T16411-1, T16411-10, T16411-3, T16411-4, T16411-5, T16411-6, T16411-7, T16411-8, T16411-9
Batch GN11528: T16411-2
(*) Outside of QC limits

6.2 6

MATRIX SPIKE RESULTS SUMMARY
GENERAL CHEMISTRY

Login Number: T16411
Account: ITTXHO - Shaw E & I, Inc.
Project: Longhorn Army Ammunition Plant

Analyte	Batch ID	QC Sample	Units	Original Result	Spike Amount	MS Result	%Rec	QC Limits
Alkalinity, Total as CaCO3	GN11336	T16411-10	mg/l	158	xxxxxxxx	215	116.0	79-122%
Nitrogen, Nitrate + Nitrite	GN11291	T16411-10	mg/l	0.20	0.100	0.30	100.0	80-119%
Nitrogen, Nitrate + Nitrite	GN11291	T16411-10	mg/l	0.20	0.100	0.30	100.0	80-119%
Nitrogen, Nitrite	GN11283	T16411-10	mg/l	0.010 B	0.100	0.11	109.0	75-134%
Nitrogen, Nitrite	GN11283	T16411-10	mg/l	0.010 B	0.100	0.11	109.0	75-134%
Sulfate	GN11356	T16411-10	mg/l	1260	250	1470	87.0	75-125%
Sulfate	GN11356	T16411-10	mg/l	1260	xxxxxxxx		*	75-125%
Sulfate	GN11528	T16728-2	mg/l	23.0	xxxxxxxx	50.0	96.0*	75-125%
Total Organic Carbon	GN11296	T16411-10	mg/l	18.0	10.0	28.0	100.0	74-121%
Total Organic Carbon	GN11296	T16411-10	mg/l	18.0	10.0	27.0	90.0	74-121%
Total Organic Carbon	GN11304	T16445-18	mg/l	6.0	10.0	16.0	100.0	74-121%

6.3 6

Associated Samples:
Batch GN11283: T16411-1, T16411-10, T16411-2, T16411-3, T16411-4, T16411-5, T16411-6, T16411-7, T16411-8, T16411-9
Batch GN11291: T16411-1, T16411-10, T16411-2, T16411-3, T16411-4, T16411-5, T16411-6, T16411-7, T16411-8, T16411-9
Batch GN11296: T16411-1, T16411-10, T16411-2, T16411-3, T16411-4, T16411-5, T16411-6, T16411-7
Batch GN11304: T16411-8, T16411-9
Batch GN11331: T16411-1, T16411-10, T16411-2, T16411-3, T16411-4, T16411-5, T16411-6, T16411-7, T16411-8, T16411-9
Batch GN11336: T16411-1, T16411-10, T16411-2, T16411-3, T16411-4, T16411-5, T16411-6, T16411-7, T16411-8, T16411-9
Batch GN11356: T16411-1, T16411-10, T16411-3, T16411-4, T16411-5, T16411-6, T16411-7, T16411-8, T16411-9
Batch GN11528: T16411-2
(*) Outside of QC limits
(N) Matrix Spike Rec. outside of QC limits

MATRIX SPIKE DUPLICATE RESULTS SUMMARY
GENERAL CHEMISTRY

Login Number: T16411
Account: ITTXHO - Shaw E & I, Inc.
Project: Longhorn Army Ammunition Plant

Analyte	Batch ID	QC Sample	Units	Original Result	Spike Amount	MSD Result	RPD	QC Limit

Associated Samples:
Batch GN11336: T16411-1, T16411-10, T16411-2, T16411-3, T16411-4, T16411-5, T16411-6, T16411-7, T16411-8, T16411-9
(*) Outside of QC limits

6.4 6

Misc. Forms

Custody Documents and Other Forms

(Accutest Laboratories Southeast, Inc.)

Includes the following where applicable:

- Chain of Custody

CHAIN OF CUSTODY

ACCUTEST Laboratories T16411

10165 Harwin, Suite 150 - Houston, TX 77036 - 713-271-4700 fax: 713-271-4770

Page 1 of 1

FED-EX Tracking #	Bottle Order Control #
Accutest Quote #	Accutest Job # T16411

Subcontract Information

Company Name: ALSE-ORLANDO
Project Contact:
Address:
City: ORLANDO State: Zip:
Phone No.: Fax No.:

Project Information

Send Report to: Agnesv@accutest.com
Bill to: Accutest Laboratories
Address: 10165 Harwin Drive, Suite 150
City: Houston, TX 77036 State: Zip:
Phone No.: 713-271-4700 / 713-271-4770 Fax No.:
Accutest Purchase Order #:

Requested Analyses

Matrix Codes: DW - Drinking Water; GW - Ground Water; WW - Wastewater; SO - Soil; SL - Sludge; OI - Oil; LIQ - Other Liquid; SOL - Other Solid

	Accutest Sample ID	Collection Date	Collection Time	Matrix	# of bottles	Number of preserved bottles: HCL	METHANOL	NaOH	H2SO4	EnCORE	NaHSO4	MeOH	NONE	Methane, Ethane, Ethene (RSK147)	Perchlorates	8330 Explosives	LAB USE ONLY
	T16411-1	2/20/2007	850	GW	5	2							3	X	X		
	T16411-2	2/20/2007	1510	GW	5	2							3	X	X	X	
	T16411-3	2/20/2007	1510	GW	5	2							3	X	X	X	
	T16411-4	2/20/2007	951	GW	5	2							3	X	X		
	T16411-5	2/20/2007	934	GW	5	2							3	X	X		
	T16411-6	2/20/2007	1223	GW	5	2							3	X	X		
	T16411-7	2/20/2007	1223	GW	5	2							3	X	X		
	T16411-8	2/20/2007	1554	GW	5	2							3	X	X		
	T16411-9	2/20/2007	1530	GW	5	2							3	X	X		
	T16411-10 +MS/MSD	2/20/2007	0	GW	5	2							3	X	X		

Turnaround Time (Business days)

- [XX] 10 Day STANDARD
- [ ] 5 Day RUSH
- [ ] 4 Day RUSH
- [ ] 3 Day EMERGENCY
- [ ] 2 Day EMERGENCY
- [ ] 1 Day EMERGENCY
- [ ] Other

Approved By/ Date:

Data Deliverable Information

- [ ] Commercial "A"
- [ ] Commercial "B"
- [XX] TRRP 13
- [XX] Reduced Tier1
- [ ] State Forms
- [ ] EDD Format
- [ ] Other

Commercial "A" = Results Only
Commercial "B" = Results & Standard QC

Comments / Remarks

SAMPLE CUSTODY MUST BE DOCUMENTED BELOW EACH TIME SAMPLES CHANGE POSSESSION, INCLUDING COURIER DELIVERY

Relinquished by Sampler:	Date Time:	Received By:	Relinquished By:	Date Time:	Received By:
1		1	2		2
Relinquished by: 3	Date Time:	Received By: 3	Relinquished By: 4	Date Time: 2/21/07 17:00	Received By: 4 FX
Relinquished by: 5 FX	Date Time: 02-22-07 09:00	Received By: 5	Custody Seal #	Preserved where applicable ☐	On Ice ☐ Cooler Temp. 3.0°

7.1 7

T16411: Chain of Custody
Page 1 of 2
Accutest Laboratories Southeast, Inc.

ACCUTEST LABORATORIES SAMPLE RECEIPT CONFIRMATION

ACCUTEST'S JOB NUMBER: T16411 CLIENT: ALSC PROJECT: T16411

DATE/TIME RECEIVED: 02-23-07 09:00 # OF COOLERS RECEIVED: 1 COOLER TEMPS: 3.0

METHOD OF DELIVERY: (FEDEX) UPS ACCUTEST COURIER GREYHOUND DELIVERY OTHER

AIRBILL NUMBERS: 7986 1387 4380

COOLER INFORMATION

- [ ] CUSTODY SEAL NOT PRESENT OR NOT INTACT
- [ ] CHAIN OF CUSTODY NOT RECEIVED (COC)
- [ ] ANALYSIS REQUESTED IS UNCLEAR OR MISSING
- [ ] SAMPLE DATES OR TIMES UNCLEAR OR MISSING
- [ ] TEMPERATURE CRITERIA NOT MET

TRIP BLANK INFORMATION

- [ ] TRIP BLANK PROVIDED
- [x] TRIP BLANK NOT PROVIDED
- [x] TRIP BLANK NOT ON COC
- [ ] TRIP BLANK INTACT
- [ ] TRIP BLANK NOT INTACT
- [ ] RECEIVED WATER TRIP BLANK
- [ ] RECEIVED SOIL TRIP BLANK

SAMPLE INFORMATION

- [ ] SAMPLE LABELS NOT PRESENT ON ALL BOTTLES
- [ ] CORRECT NUMBER OF CONTAINERS USED
- [ ] SAMPLE RECEIVED IMPROPERLY PRESERVED
- [ ] INSUFFICIENT VOLUME FOR ANALYSIS
- [ ] TIMES ON COC DOES NOT MATCH LABEL(S)
- [ ] ID'S ON COC DOES NOT MATCH LABEL(S)
- [ ] VOC VIALS HAVE HEADSPACE (MACRO BUBBLES)
- [ ] BOTTLES RECEIVED BUT ANALYSIS NOT REQUESTED
- [ ] NO BOTTLES RECEIVED FOR ANALYSIS REQUESTED
- [ ] UNCLEAR FILTERING INSTRUCTIONS
- [ ] UNCLEAR COMPOSITING INSTRUCTIONS
- [ ] SAMPLE CONTAINER(S) RECEIVED BROKEN
- [ ] % SOLIDS JAR NOT RECEIVED
- [ ] 5035 FIELD KIT NOT FROZEN WITHIN 48 HOUR'S
- [ ] RESIDUAL CHLORINE PRESENT

(APPLICABLE TO EPA 600 SERIES OR NORTH CAROLINA ORGANICS)

MISC. INFORMATION

NUMBER OF ENCORES ? 0

NUMBER OF 5035 FIELD KITS ? 0

NUMBER OR LAB FILTERED METALS ? 0

SUMMARY OF COMMENTS: # OF BOTTLES DONT MATCH WITH WHAT WE RECEIVED

* SAMPLES: #1, #4 - #9 RECEIVED THREE HCL VIALS AND ONE UNPRESERVED BOTTLE
* SAMPLES: #2, #3 RECEIVED THREE HCL VIALS, ONE UNPRESERVED AMBER AND ONE UNP. BOTTLE
* SAMPLE: #10 RECEIVED 6 HCL VIALS AND 2 UNPRESERVED BOTTLES

TECHNICIAN SIGNATURE/DATE [signature] 02-23-07 TECHNICIAN SIGNATURE/DATE

ASBD 10/03/06

7.1 7

T16411: Chain of Custody
Page 2 of 2

GC Volatiles

QC Data Summaries

(Accutest Laboratories Southeast, Inc.)

Includes the following where applicable:

- Method Blank Summaries
- Blank Spike Summaries
- Matrix Spike and Duplicate Summaries
- Surrogate Recovery Summaries
- GC Surrogate Retention Time Summaries
- Initial and Continuing Calibration Summaries

Method Blank Summary

Job Number: T16411
Account: ALGC Accutest Laboratories Gulf Coast, Inc.
Project: ITTXHO: Longhorn Army Ammunition Plant

Sample	File ID	DF	Analyzed	By	Prep Date	Prep Batch	Analytical Batch
GXY991-MB	XY025230.D	1	02/26/07	TD	n/a	n/a	GXY991

The QC reported here applies to the following samples: Method: RSKSOP-147/175

T16411-1, T16411-2, T16411-3, T16411-4, T16411-5, T16411-6, T16411-7, T16411-8, T16411-9, T16411-10

CAS No.	Compound	Result	RL	MDL	Units	Q
74-82-8	Methane	ND	0.50	0.30	ug/l	
74-84-0	Ethane	ND	1.0	0.60	ug/l	
74-85-1	Ethene	ND	1.0	0.80	ug/l	

8.1

Blank Spike Summary

Job Number: T16411
Account: ALGC Accutest Laboratories Gulf Coast, Inc.
Project: ITTXHO: Longhorn Army Ammunition Plant

Sample	File ID	DF	Analyzed	By	Prep Date	Prep Batch	Analytical Batch
GXY991-BS	XY025231.D	1	02/26/07	TD	n/a	n/a	GXY991

The QC reported here applies to the following samples: Method: RSKSOP-147/175

T16411-1, T16411-2, T16411-3, T16411-4, T16411-5, T16411-6, T16411-7, T16411-8, T16411-9, T16411-10

CAS No.	Compound	Spike ug/l	BSP ug/l	BSP %	Limits
74-82-8	Methane	108	99.2	92	54-149
74-84-0	Ethane	219	217	99	57-143
74-85-1	Ethene	290	276	95	57-143

8.2 8

Matrix Spike Summary

Job Number: T16411
Account: ALGC Accutest Laboratories Gulf Coast, Inc.
Project: ITTXHO: Longhorn Army Ammunition Plant

Sample	File ID	DF	Analyzed	By	Prep Date	Prep Batch	Analytical Batch
T16411-10MS	XY025248.D	1	02/26/07	TD	n/a	n/a	GXY991
T16411-10	XY025246.D	1	02/26/07	TD	n/a	n/a	GXY991

The QC reported here applies to the following samples: Method: RSKSOP-147/175

T16411-1, T16411-2, T16411-3, T16411-4, T16411-5, T16411-6, T16411-7, T16411-8, T16411-9, T16411-10

CAS No.	Compound	T16411-10 ug/l	Q	Spike ug/l	MS ug/l	MS %	Limits
74-82-8	Methane	0.50	U	108	103	95	54-149
74-84-0	Ethane	1.0	U	219	226	103	57-143
74-85-1	Ethene	1.0	U	290	290	100	57-143

8.3

Duplicate Summary

Job Number: T16411
Account: ALGC Accutest Laboratories Gulf Coast, Inc.
Project: ITTXHO: Longhorn Army Ammunition Plant

Sample	File ID	DF	Analyzed	By	Prep Date	Prep Batch	Analytical Batch
T16411-10DUP	XY025247.D	1	02/26/07	TD	n/a	n/a	GXY991
T16411-10	XY025246.D	1	02/26/07	TD	n/a	n/a	GXY991

The QC reported here applies to the following samples: Method: RSKSOP-147/175

T16411-1, T16411-2, T16411-3, T16411-4, T16411-5, T16411-6, T16411-7, T16411-8, T16411-9, T16411-10

CAS No.	Compound	T16411-10 ug/l	Q	DUP ug/l	Q	RPD	Limits
74-82-8	Methane	0.50 U		ND		nc	24
74-84-0	Ethane	1.0 U		ND		nc	23
74-85-1	Ethene	1.0 U		ND		nc	10

8.4

8

Initial Calibration Summary

Job Number: T16411
Account: ALGC Accutest Laboratories Gulf Coast, Inc.
Project: ITTXHO: Longhorn Army Ammunition Plant

Sample: GXY989-ICC989
Lab FileID: XY025202.D

Response Factor Report VOA5

Method : C:\HPCHEM\2\METHODS\RSK147XY.M (Chemstation Integrator)
Title : Dissolved Gases in Water
Last Update : Thu Feb 22 15:36:18 2007
Response via : Initial Calibration

Calibration Files
1 =XY025194.D 2 =XY025195.D 3 =XY025201.D 4 =XY025197.D
5 =XY025202.D 6 =XY025199.D 7 =XY025200.D

Compound	1	2	3	4	5	6	7	Avg	%RSD
1)c Methane	1.442	0.904	1.128	1.220	0.672	0.793	0.957	1.017 E4	26.02
2)c Ethylene	2.415	1.896	1.964	2.128	1.306	1.522	1.817	1.864 E4	19.76
3)c Ethane	2.311	1.873	1.880	2.068	1.280	1.499	1.798	1.816 E4	18.87

(#) = Out of Range

RSK147XY.M Thu Feb 22 15:38:10 2007

8.5 8

Initial Calibration Verification

Job Number: T16411
Account: ALGC Accutest Laboratories Gulf Coast, Inc.
Project: ITTXHO: Longhorn Army Ammunition Plant

Sample: GXY989-ICV989
Lab FileID: XY025203.D

Evaluate Continuing Calibration Report

```
Data File : C:\HPCHEM\2\DATA\022207\XY025203.D          Vial: 100
Acq On    : 22 Feb 2007   1:27 pm                    Operator: Trangd
Sample    : ICV989-1000                              Inst    : VOA5
Misc      : gc7062,gxy989,,,,,                       Multiplr: 1.00
IntFile   : EVENTS.E

Method       : C:\HPCHEM\2\METHODS\RSK147XY.M (Chemstation Integrator)
Title        : Dissolved Gases in Water
Last Update  : Thu Feb 22 15:36:18 2007
Response via : Multiple Level Calibration

Min. RRF     :   0.000  Min. Rel. Area :  50%  Max. R.T. Dev  0.50min
Max. RRF Dev :  30%     Max. Rel. Area : 150%
```

	Compound	Amount	Calc.	%Drift	Area%	Dev(min)	RT Window
1 c	Methane	1000.000	1154.410	-15.4	175	0.20	0.88- 1.48
2 c	Ethylene	1000.000	1202.152	-20.2	172	0.31	2.54- 3.34
3 c	Ethane	1000.000	1245.774	-24.6	177	0.32	3.14- 3.94

(#) = Out of Range SPCC's out = 0 CCC's out = 0
XY025202.D RSK147XY.M Thu Feb 22 15:37:53 2007

8.5 8

Continuing Calibration Summary

Job Number: T16411
Account: ALGC Accutest Laboratories Gulf Coast, Inc.
Project: ITTXHO: Longhorn Army Ammunition Plant

Sample: GXY991-CC989
Lab FileID: XY025228.D

Evaluate Continuing Calibration Report

Data File : C:\HPCHEM\2\DATA\022607\XY025228.D
Acq On : 26 Feb 2007 9:27 am
Sample : CC989-1000
Misc : gc7062,gxy991,,,,,
IntFile : EVENTS.E

Vial: 100
Operator: Trangd
Inst : VOA5
Multiplr: 1.00

Method : C:\HPCHEM\2\METHODS\RSK147XY.M (Chemstation Integrator)
Title : Dissolved Gases in Water
Last Update : Tue Feb 27 13:37:21 2007
Response via : Multiple Level Calibration

Min. RRF : 0.000 Min. Rel. Area : 50% Max. R.T. Dev 0.50min
Max. RRF Dev : 30% Max. Rel. Area : 150%

	Compound	Amount	Calc.	%Drift	Area%	Dev(min)	RT Window
1 c	Methane	1000.000	935.186	6.5	141	0.07	1.13- 1.73
2 c	Ethylene	1000.000	1013.727	-1.4	145	0.09	2.94- 3.74
3 c	Ethane	1000.000	1028.150	-2.8	146	0.09	3.57- 4.37

(#) = Out of Range
SPCC's out = 0 CCC's out = 0
XY025202.D RSK147XY.M Tue Feb 27 14:33:55 2007

8.5 8

Continuing Calibration Summary

Job Number: T16411
Account: ALGC Accutest Laboratories Gulf Coast, Inc.
Project: ITTXHO: Longhorn Army Ammunition Plant

Sample: GXY991-CC989
Lab FileID: XY025239.D

Evaluate Continuing Calibration Report

```
Data File : C:\HPCHEM\2\DATA\022607\XY025239.D          Vial: 100
Acq On    : 26 Feb 2007  12:29 pm                    Operator: Trangd
Sample    : CC989-500                                Inst    : VOA5
Misc      : gc7062,gxy991,,,,,                       Multiplr: 1.00
IntFile   : EVENTS.E

Method       : C:\HPCHEM\2\METHODS\RSK147XY.M (Chemstation Integrator)
Title        : Dissolved Gases in Water
Last Update  : Tue Feb 27 13:37:21 2007
Response via : Multiple Level Calibration

Min. RRF     :   0.000  Min. Rel. Area :  50%  Max. R.T. Dev  0.50min
Max. RRF Dev :  30%     Max. Rel. Area : 150%
```

	Compound	Amount	Calc.	%Drift	Area%	Dev(min)	RT Window
1 c	Methane	500.000	499.976	0.0	83	-0.02	1.13- 1.73
2 c	Ethylene	500.000	546.961	-9.4	96	0.00	2.94- 3.74
3 c	Ethane	500.000	553.481	-10.7	97	0.00	3.57- 4.37

(#) = Out of Range SPCC's out = 0 CCC's out = 0
XY025197.D RSK147XY.M Tue Feb 27 14:33:29 2007

8.5 8

Continuing Calibration Summary

Job Number: T16411
Account: ALGC Accutest Laboratories Gulf Coast, Inc.
Project: ITTXHO: Longhorn Army Ammunition Plant

Sample: GXY991-ECC989
Lab FileID: XY025249.D

Evaluate Continuing Calibration Report

Data File : C:\HPCHEM\2\DATA\022607\XY025249.D
Acq On : 26 Feb 2007 3:23 pm
Sample : ECC989-1000
Misc : gc7062,gxy991,,,,,
IntFile : EVENTS.E

Vial: 100
Operator: Trangd
Inst : VOA5
Multiplr: 1.00

Method : C:\HPCHEM\2\METHODS\RSK147XY.M (Chemstation Integrator)
Title : Dissolved Gases in Water
Last Update : Tue Feb 27 13:37:21 2007
Response via : Multiple Level Calibration

Min. RRF : 0.000 Min. Rel. Area : 50% Max. R.T. Dev 0.50min
Max. RRF Dev : 30% Max. Rel. Area : 150%

	Compound	Amount	Calc.	%Drift	Area%	Dev(min)	RT Window
1 c	Methane	1000.000	1134.333	-13.4	172	0.01	1.13- 1.73
2 c	Ethylene	1000.000	1229.780	-23.0	175	0.00	2.94- 3.74
3 c	Ethane	1000.000	1245.098	-24.5	177	0.00	3.57- 4.37

(#) = Out of Range
SPCC's out = 0 CCC's out = 0
XY025202.D RSK147XY.M Tue Feb 27 14:33:55 2007

8.5
8

GC Semi-volatiles

QC Data Summaries

(Accutest Laboratories Southeast, Inc.)

Includes the following where applicable:

- Method Blank Summaries
- Blank Spike Summaries
- Matrix Spike and Duplicate Summaries
- Surrogate Recovery Summaries
- GC Surrogate Retention Time Summaries
- Initial and Continuing Calibration Summaries

Method Blank Summary

Job Number: T16411
Account: ALGC Accutest Laboratories Gulf Coast, Inc.
Project: ITTXHO: Longhorn Army Ammunition Plant

Sample	File ID	DF	Analyzed	By	Prep Date	Prep Batch	Analytical Batch
OP19630-MB	GG020114.D	1	02/27/07	MRE	02/26/07	OP19630	GGG904

The QC reported here applies to the following samples: Method: SW846 8330A

T16411-2, T16411-3

CAS No.	Compound	Result	RL	MDL	Units	Q
2691-41-0	HMX	ND	0.20	0.060	ug/l	
121-82-4	RDX	ND	0.20	0.075	ug/l	
99-65-0	1,3-Dinitrobenzene	ND	0.20	0.070	ug/l	
606-20-2	2,6-Dinitrotoluene	ND	0.20	0.065	ug/l	
121-14-2	2,4-Dinitrotoluene	ND	0.20	0.075	ug/l	
35572-78-2	2-amino-4,6-Dinitrotoluene	ND	0.20	0.070	ug/l	
19406-51-0	4-amino-2,6-Dinitrotoluene	ND	0.20	0.080	ug/l	
98-95-3	Nitrobenzene	ND	0.20	0.060	ug/l	
88-72-2	o-Nitrotoluene	ND	0.20	0.060	ug/l	
99-08-1	m-Nitrotoluene	ND	0.20	0.075	ug/l	
99-99-0	p-Nitrotoluene	ND	0.20	0.075	ug/l	
479-45-8	Tetryl	ND	0.20	0.075	ug/l	
99-35-4	1,3,5-Trinitrobenzene	ND	0.20	0.095	ug/l	
118-96-7	2,4,6-Trinitrotoluene	ND	0.20	0.080	ug/l	

CAS No.	Surrogate Recoveries		Limits
610-39-9	3,4-Dinitrotoluene	117%	70-136%

9.1 6

Method Blank Summary

Job Number: T16411
Account: ALGC Accutest Laboratories Gulf Coast, Inc.
Project: ITTXHO: Longhorn Army Ammunition Plant

Sample	File ID	DF	Analyzed	By	Prep Date	Prep Batch	Analytical Batch
OP19630-MB	GG020188.D	1	03/01/07	MRE	02/26/07	OP19630	GGG905

The QC reported here applies to the following samples: Method: SW846 8330A

T16411-2, T16411-3

CAS No.	Compound	Result	RL	MDL	Units	Q
2691-41-0	HMX	ND	0.20	0.060	ug/l	
121-82-4	RDX	ND	0.20	0.075	ug/l	
99-65-0	1,3-Dinitrobenzene	ND	0.20	0.070	ug/l	
606-20-2	2,6-Dinitrotoluene	ND	0.20	0.065	ug/l	
121-14-2	2,4-Dinitrotoluene	ND	0.20	0.075	ug/l	
35572-78-2	2-amino-4,6-Dinitrotoluene	ND	0.20	0.070	ug/l	
19406-51-0	4-amino-2,6-Dinitrotoluene	ND	0.20	0.080	ug/l	
98-95-3	Nitrobenzene	ND	0.20	0.060	ug/l	
88-72-2	o-Nitrotoluene	ND	0.20	0.060	ug/l	
99-08-1	m-Nitrotoluene	ND	0.20	0.075	ug/l	
99-99-0	p-Nitrotoluene	ND	0.20	0.075	ug/l	
479-45-8	Tetryl	ND	0.20	0.075	ug/l	
99-35-4	1,3,5-Trinitrobenzene	ND	0.20	0.095	ug/l	
118-96-7	2,4,6-Trinitrotoluene	ND	0.20	0.080	ug/l	

CAS No.	Surrogate Recoveries		Limits
610-39-9	3,4-Dinitrotoluene	98%	70-136%

Blank Spike Summary

Job Number: T16411
Account: ALGC Accutest Laboratories Gulf Coast, Inc.
Project: ITTXHO: Longhorn Army Ammunition Plant

Sample	File ID	DF	Analyzed	By	Prep Date	Prep Batch	Analytical Batch
OP19630-BS	GG020113.D	1	02/27/07	MRE	02/26/07	OP19630	GGG904

The QC reported here applies to the following samples: Method: SW846 8330A

T16411-2, T16411-3

CAS No.	Compound	Spike ug/l	BSP ug/l	BSP %	Limits
2691-41-0	HMX	5	5.4	108	74-152
121-82-4	RDX	5	5.4	108	80-124
99-65-0	1,3-Dinitrobenzene	5	5.4	108	84-123
606-20-2	2,6-Dinitrotoluene	5	5.1	102	84-133
121-14-2	2,4-Dinitrotoluene	5	5.3	106	77-116
35572-78-2	2-amino-4,6-Dinitrotoluene	5	5.4	108	78-117
19406-51-0	4-amino-2,6-Dinitrotoluene	5	5.3	106	84-123
98-95-3	Nitrobenzene	5	5.6	112	76-128
88-72-2	o-Nitrotoluene	5	5.0	100	76-120
99-08-1	m-Nitrotoluene	5	5.1	102	74-124
99-99-0	p-Nitrotoluene	5	5.3	106	81-125
479-45-8	Tetryl	5	4.7	94	62-117
99-35-4	1,3,5-Trinitrobenzene	5	5.4	108	85-127
118-96-7	2,4,6-Trinitrotoluene	5	5.5	110	71-128

CAS No.	Surrogate Recoveries	BSP	Limits
610-39-9	3,4-Dinitrotoluene	128%	70-136%

Blank Spike Summary

Job Number: T16411
Account: ALGC Accutest Laboratories Gulf Coast, Inc.
Project: ITTXHO: Longhorn Army Ammunition Plant

Sample	File ID	DF	Analyzed	By	Prep Date	Prep Batch	Analytical Batch
OP19630-BS	GG020187.D	1	03/01/07	MRE	02/26/07	OP19630	GGG905

The QC reported here applies to the following samples: Method: SW846 8330A

T16411-2, T16411-3

CAS No.	Compound	Spike ug/l	BSP ug/l	BSP %	Limits
2691-41-0	HMX	5	6.1	122	74-152
121-82-4	RDX	5	5.6	112	80-124
99-65-0	1,3-Dinitrobenzene	5	5.4	108	84-123
606-20-2	2,6-Dinitrotoluene	5	5.2	104	84-133
121-14-2	2,4-Dinitrotoluene	5	5.3	106	77-116
35572-78-2	2-amino-4,6-Dinitrotoluene	5	5.4	108	78-117
19406-51-0	4-amino-2,6-Dinitrotoluene	5	5.2	104	84-123
98-95-3	Nitrobenzene	5	6.2	124	76-128
88-72-2	o-Nitrotoluene	5	5.1	102	76-120
99-08-1	m-Nitrotoluene	5	5.4	108	74-124
99-99-0	p-Nitrotoluene	5	5.4	108	81-125
479-45-8	Tetryl	5	4.8	96	62-117
99-35-4	1,3,5-Trinitrobenzene	5	5.7	114	85-127
118-96-7	2,4,6-Trinitrotoluene	5	5.9	118	71-128

CAS No.	Surrogate Recoveries	BSP	Limits
610-39-9	3,4-Dinitrotoluene	112%	70-136%

Matrix Spike/Matrix Spike Duplicate Summary

Job Number: T16411
Account: ALGC Accutest Laboratories Gulf Coast, Inc.
Project: ITTXHO: Longhorn Army Ammunition Plant

Sample	File ID	DF	Analyzed	By	Prep Date	Prep Batch	Analytical Batch
OP19630-MS	GG020118.D	1	02/27/07	MRE	02/26/07	OP19630	GGG904
OP19630-MSD	GG020119.D	1	02/27/07	MRE	02/26/07	OP19630	GGG904
F47423-3 [a]	GG020168.D	1	02/28/07	MRE	02/26/07	OP19630	GGG904
F47423-3 [b]	GG020190.D	1	03/01/07	MRE	02/26/07	OP19630	GGG905

The QC reported here applies to the following samples: Method: SW846 8330A

T16411-2, T16411-3

CAS No.	Compound	F47423-3 ug/l	Q	Spike ug/l	MS ug/l	MS %	MSD ug/l	MSD %	RPD	Limits Rec/RPD
2691-41-0	HMX	1.2		9.62	10.9	101	11.3	105	4	74-152/21
121-82-4	RDX	14.5		9.62	25.3	112	26.9	129*	6	80-124/20
99-65-0	1,3-Dinitrobenzene	ND		9.62	9.8	102	10.2	106	4	84-123/23
606-20-2	2,6-Dinitrotoluene	ND		9.62	9.3	97	9.7	101	4	84-133/23
121-14-2	2,4-Dinitrotoluene	ND		9.62	9.5	99	9.8	102	3	77-116/26
35572-78-2	2-amino-4,6-Dinitrotoluene	ND		9.62	9.3	97	9.8	102	5	78-117/28
19406-51-0	4-amino-2,6-Dinitrotoluene	ND		9.62	9.0	94	9.5	99	5	84-123/27
98-95-3	Nitrobenzene	ND		9.62	10.1	105	10.5	109	4	76-128/28
88-72-2	o-Nitrotoluene	ND		9.62	8.9	93	9.5	99	7	76-120/30
99-08-1	m-Nitrotoluene	ND		9.62	9.1	95	9.8	102	7	74-124/32
99-99-0	p-Nitrotoluene	ND		9.62	9.4	98	10.1	105	7	81-125/34
479-45-8	Tetryl	ND		9.62	7.4	77	7.8	81	5	62-117/28
99-35-4	1,3,5-Trinitrobenzene	ND		9.62	9.9	103	10.3	107	4	85-127/21
118-96-7	2,4,6-Trinitrotoluene	ND		9.62	9.6	100	10	104	4	71-128/21

CAS No.	Surrogate Recoveries	MS	MSD	F47423-3	F47423-3	Limits
610-39-9	3,4-Dinitrotoluene	94%	94%	103%	105%	70-136%

(a) All hits confirmed by reanalysis on a dissimilar column.
(b) Confirmation run.

Semivolatile Surrogate Recovery Summary

Job Number: T16411
Account: ALGC Accutest Laboratories Gulf Coast, Inc.
Project: ITTXHO: Longhorn Army Ammunition Plant

Method: SW846 8330A Matrix: AQ

Samples and QC shown here apply to the above method

Lab Sample ID	Lab File ID	S1 [a]
T16411-2	GG020170.D	98.0
T16411-3	GG020171.D	96.0
OP19630-BS	GG020113.D	128.0
OP19630-BS	GG020187.D	112.0
OP19630-MB	GG020114.D	117.0
OP19630-MB	GG020188.D	98.0
OP19630-MS	GG020118.D	94.0
OP19630-MSD	GG020119.D	94.0

Surrogate Compounds	Recovery Limits
S1 = 3,4-Dinitrotoluene	70-136%

(a) Recovery from GC signal #1

9.4

GC Surrogate Retention Time Summary

Job Number: T16411
Account: ALGC Accutest Laboratories Gulf Coast, Inc.
Project: ITTXHO: Longhorn Army Ammunition Plant

Check Std:	GGG904-CC825	Injection Date:	02/27/07
Lab File ID:	GG020112.D	Injection Time:	15:07
Instrument ID:	GCGG	Method:	SW846 8330A

	S1 [a] RT
Check Std	13.47

Lab Sample ID	Lab File ID	Date Analyzed	Time Analyzed	S1 [a] RT
OP19630-BS	GG020113.D	02/27/07	15:34	13.47
OP19630-MB	GG020114.D	02/27/07	16:02	13.49
ZZZZZZ	GG020115.D	02/27/07	16:29	13.51
ZZZZZZ	GG020116.D	02/27/07	16:57	13.52
OP19630-MS	GG020118.D	02/27/07	17:52	13.51
OP19630-MSD	GG020119.D	02/27/07	18:20	13.51
ZZZZZZ	GG020120.D	02/27/07	18:47	13.51
ZZZZZZ	GG020122.D	02/27/07	19:43	13.50

Surrogate Compounds

S1 = 3,4-Dinitrotoluene

(a) Retention time from GC signal #1

GC Surrogate Retention Time Summary

Job Number: T16411
Account: ALGC Accutest Laboratories Gulf Coast, Inc.
Project: ITTXHO: Longhorn Army Ammunition Plant

Check Std:	GGG904-CC825	Injection Date:	02/28/07
Lab File ID:	GG020166.D	Injection Time:	16:02
Instrument ID:	GCGG	Method:	SW846 8330A

	S1 [a] RT
Check Std	13.44

Lab Sample ID	Lab File ID	Date Analyzed	Time Analyzed	S1 [a] RT
F47423-3	GG020168.D	02/28/07	16:57	13.44
ZZZZZZ	GG020169.D	02/28/07	17:25	13.44
T16411-2	GG020170.D	02/28/07	17:52	13.45
T16411-3	GG020171.D	02/28/07	18:20	13.44
ZZZZZZ	GG020172.D	02/28/07	18:47	13.47
OP19656-BS	GG020173.D	02/28/07	19:15	13.39
OP19656-MB	GG020174.D	02/28/07	19:43	13.38
F47412-1	GG020175.D	02/28/07	20:10	13.38
OP19656-MS	GG020176.D	02/28/07	20:38	13.38
OP19656-MSD	GG020177.D	02/28/07	21:06	13.37

Surrogate Compounds

S1 = 3,4-Dinitrotoluene

(a) Retention time from GC signal #1

GC Surrogate Retention Time Summary

Job Number: T16411
Account: ALGC Accutest Laboratories Gulf Coast, Inc.
Project: ITTXHO: Longhorn Army Ammunition Plant

Check Std:	GGG905-CC827	Injection Date:	03/01/07
Lab File ID:	GG020186.D	Injection Time:	10:47
Instrument ID:	GCGG	Method:	SW846 8330A

	S1 [a] RT	S1 [b] RT
Check Std	10.70	10.70

Lab Sample ID	Lab File ID	Date Analyzed	Time Analyzed	S1 [a] RT	S1 [b] RT
OP19630-BS	GG020187.D	03/01/07	11:07	10.69	
OP19630-MB	GG020188.D	03/01/07	11:26	10.70	
ZZZZZZ	GG020189.D	03/01/07	11:46	10.69	
F47423-3	GG020190.D	03/01/07	12:05	10.70	
ZZZZZZ	GG020191.D	03/01/07	12:25	10.69	
OP19656-BS	GG020193.D	03/01/07	13:04	10.66	
OP19656-MB	GG020194.D	03/01/07	13:24	10.67	
ZZZZZZ	GG020195.D	03/01/07	13:43	10.67	
GGG905-ECC827	GG020197.D	03/01/07	14:22	10.72	10.72

Surrogate Compounds

S1 = 3,4-Dinitrotoluene

(a) Retention time from GC signal #1
(b) Retention time from GC signal #2

Initial Calibration Summary

Job Number: T16411
Account: ALGC Accutest Laboratories Gulf Coast, Inc.
Project: ITTXHO: Longhorn Army Ammunition Plant

Sample: GGG825-ICC825
Lab FileID: GG018282.D

Response Factor Report G1315B

Method : C:\HPCHEM\1\METHODS\8330_EX.M (Chemstation Integrator)
Title : Explosives by 8330
Last Update : Thu Oct 19 11:32:41 2006
Response via : Initial Calibration

Calibration Files
20 =GG018279.D 100 =GG018280.D 250 =GG018281.D 500 =GG018282.D
750 =GG018283.D 1000=GG018284.D 2000=GG018285.D ICV =GG018286.D

Compound	20	100	250	500	750	1000	2000	ICV	Avg	%RSD
1) HMX	2.870	2.789	2.757	2.694	2.719	2.735	2.786		2.764 E3	2.09
2) TNX	5.916	6.424	6.486	6.331	6.453	6.468	6.587		6.381 E3	3.43
3) DNX	4.900	5.156	5.125	4.986	5.037	5.057	5.155		5.059 E3	1.88
4) MNX	4.909	4.991	4.972	4.807	4.886	4.901	4.995		4.923 E3	1.38
5) RDX	3.185	3.565	3.625	3.500	3.554	3.547	3.609		3.512 E3	4.27
6) 1,3,5-Trinit	7.763	7.813	7.689	7.436	7.595	7.612	7.763		7.667 E3	1.70
7) 1,3-Dinitrob	1.069	1.070	1.060	1.029	1.047	1.051	1.071		1.057 E4	1.49
8) Tetryl	6.130	6.168	6.180	6.004	6.091	6.096	6.221		6.127 E3	1.17
9) Nitrobenzene	7.057	7.032	7.019	6.708	6.915	6.920	7.082		6.962 E3	1.85
10) 3,4-Dinitrot	4.667	4.752	4.687	4.537	4.621	4.631	4.731		4.661 E3	1.56
11) 2,4,6-Trinit	7.275	7.409	7.373	7.143	7.282	7.301	7.456		7.320 E3	1.42
12) 4-Amino-2,6-	5.266	5.304	5.264	5.117	5.194	5.220	5.330		5.242 E3	1.37
13) 2-Amino-4,6-	7.249	7.203	7.187	7.006	7.130	7.155	7.311		7.177 E3	1.35
14) 2,6-Dinitrot	5.524	5.133	5.010	4.844	4.942	4.954	5.071		5.068 E3	4.37
15) 2,4-Dinitrot	1.149	1.009	0.992	0.958	0.976	0.978	0.999		1.009 E4	6.36
16) o-Nitrotolue	5.044	4.558	4.542	4.244	4.403	4.414	4.516		4.532 E3	5.53
17) p-Nitrotolue	4.102	3.815	3.790	3.596	3.734	3.734	3.831		3.800 E3	4.06
18) m-Nitrotolue	4.959	4.808	4.856	4.629	4.803	4.812	4.942		4.830 E3	2.26

Signal #2

1) HMX	8.151	8.148	8.190	8.012	8.090	8.092	8.238		8.132 E3	0.91
2) TNX	0.956	0.980	0.995	0.969	0.984	0.985	1.001		0.981 E4	1.55
3) DNX	7.525	8.044	8.332	7.974	7.996	7.991	8.136		8.000 E3	3.05
4) MNX	7.756	7.781	7.940	7.696	7.742	7.746	7.895		7.794 E3	1.14
5) RDX	4.720	5.727	5.947	5.855	5.997	5.944	6.042		5.748 E3	8.08
6) 1,3,5-Trinit	1.479	1.619	1.553	1.513	1.538	1.540	1.572		1.545 E4	2.85
7) 1,3-Dinitrob	1.225	1.286	1.279	1.246	1.265	1.272	1.295		1.267 E4	1.91
8) Tetryl	1.037	1.106	1.123	1.092	1.106	1.105	1.129		1.100 E4	2.76
9) Nitrobenzene	3.263	3.394	3.343	3.176	3.205	3.190	3.274		3.264 E3	2.50
10) 3,4-Dinitrot	6.324	6.522	6.468	6.218	6.242	6.243	6.394		6.344 E3	1.89
11) 2,4,6-Trinit	1.070	1.106	1.085	1.048	1.060	1.064	1.089		1.075 E4	1.85
12) 4-Amino-2,6-	1.430	1.457	1.434	1.391	1.407	1.413	1.444		1.425 E4	1.62
13) 2-Amino-4,6-	1.240	1.240	1.201	1.171	1.189	1.194	1.223		1.208 E4	2.20
14) 2,6-Dinitrot	8.005	7.244	6.878	6.645	6.758	6.778	6.958		7.038 E3	6.64
15) 2,4-Dinitrot	1.102	0.930	0.906	0.880	0.888	0.892	0.911		0.930 E4	8.36
16) o-Nitrotolue	5.194	4.804	4.848	4.493	4.691	4.697	4.799		4.789 E3	4.46
17) p-Nitrotolue	7.934	7.544	7.631	7.143	7.472	7.477	7.640		7.549 E3	3.15
18) m-Nitrotolue	6.835	7.097	7.192	6.782	7.103	7.117	7.290		7.060 E3	2.62

(#) = Out of Range ### Number of calibration levels exceeded format ###

8330_EX.M Fri Oct 20 16:25:52 2006

Initial Calibration Verification

Job Number: T16411
Account: ALGC Accutest Laboratories Gulf Coast, Inc.
Project: ITTXHO: Longhorn Army Ammunition Plant

Sample: GGG825-ICV825
Lab FileID: GG018286.D

Evaluate Continuing Calibration Report

Signal #1 : G:\HPCHEM\1\DATA\1018ODS\GG018286.D\dad1B.ch Vial: 10
Signal #2 : G:\HPCHEM\1\DATA\1018ODS\GG018286.D\dad1A.ch
Acq On : 18-Oct-2006, 17:39:03 Operator: MIKEE
Sample : ICV825-500 Inst : G1315B
Misc : OP18202,ggg825,1000,,,10,,water Multiplr: 1.00
IntFile Signal #1: EVENTS.E IntFile Signal #2: EVENTS2.E

Method : C:\HPCHEM\1\METHODS\8330_EX.M (Chemstation Integrator)
Title : Explosives by 8330
Last Update : Thu Oct 19 11:32:41 2006
Response via : Multiple Level Calibration

Min. RRF : 0.000 Min. Rel. Area : 50% Max. R.T. Dev 0.50min
Max. RRF Dev : 15% Max. Rel. Area : 200%

		Compound	Amount	Calc.	%Drift	Area%	Dev(min)	RT Window
1		HMX	500.000	531.119	-6.2	0	0.00	3.83- 4.83
2		TNX		----------NA----------				
3		DNX		----------NA----------				
4		MNX		----------NA----------				
5		RDX	500.000	507.091	-1.4	0	0.00	6.10- 7.10
6		1,3,5-Trinitrobenzene	500.000	533.853	-6.8	0	0.00	8.41- 9.41
7		1,3-Dinitrobenzene	500.000	523.924	-4.8	0	0.00	10.38-11.38
8		Tetryl	500.000	484.365	3.1	0	0.00	11.18-12.18
9		Nitrobenzene	500.000	531.046	-6.2	0	0.00	11.86-12.86
10	S	3,4-Dinitrotoluene		----------NA----------				
11		2,4,6-Trinitrotoluene	500.000	507.486	-1.5	0	0.00	13.56-14.56
12		4-Amino-2,6-Dinitrotol	500.000	515.885	-3.2	0	0.00	14.25-15.25
13		2-Amino-4,6-Dinitrotol	500.000	480.846	3.8	0	0.00	15.03-16.03
14		2,6-Dinitrotoluene	500.000	496.634	0.7	0	0.00	16.01-17.01
15		2,4-Dinitrotoluene	500.000	502.401	-0.5	0	0.00	16.52-17.52
16		o-Nitrotoluene	500.000	501.204	-0.2	0	0.00	19.59-20.59
17		p-Nitrotoluene	500.000	520.375	-4.1	0	0.00	20.92-21.92
18		m-Nitrotoluene	500.000	509.118	-1.8	0	0.00	22.61-23.61

***** Signal #2 *****

1		HMX	500.000	537.899	-7.6	0	0.00	3.83- 4.83
2		TNX		----------NA----------				
3		DNX		----------NA----------				
4		MNX		----------NA----------				
5		RDX	500.000	525.299	-5.1	0	0.00	6.10- 7.10
6		1,3,5-Trinitrobenzene	500.000	533.889	-6.8	0	0.00	8.41- 9.41
7		1,3-Dinitrobenzene	500.000	529.524	-5.9	0	0.00	10.38-11.38
8		Tetryl	500.000	489.295	2.1	0	0.00	11.18-12.18
9		Nitrobenzene	500.000	531.782	-6.4	0	0.00	11.86-12.86
10	S	3,4-Dinitrotoluene		----------NA----------				
11		2,4,6-Trinitrotoluene	500.000	505.844	-1.2	0	0.00	13.56-14.56
12		4-Amino-2,6-Dinitrotol	500.000	516.203	-3.2	0	0.00	14.25-15.25
13		2-Amino-4,6-Dinitrotol	500.000	480.458	3.9	0	0.00	15.03-16.03
14		2,6-Dinitrotoluene	500.000	493.423	1.3	0	0.00	16.01-17.01
15		2,4-Dinitrotoluene	500.000	499.987	0.0	0	0.00	16.52-17.52
16		o-Nitrotoluene	500.000	503.639	-0.7	0	0.00	19.59-20.59
17		p-Nitrotoluene	500.000	523.730	-4.7	0	0.00	20.92-21.92
18		m-Nitrotoluene	500.000	512.492	-2.5	0	0.00	22.61-23.61

Initial Calibration Verification

Job Number: T16411
Account: ALGC Accutest Laboratories Gulf Coast, Inc.
Project: ITTXHO: Longhorn Army Ammunition Plant

Sample: GGG825-ICV825
Lab FileID: GG018286.D

```
(#) = Out of Range                SPCC's out = 0  CCC's out = 0
 GG018286.D 8330_EX.M        Fri Oct 20 16:26:22 2006
```

9.6

Initial Calibration Verification

Job Number: T16411
Account: ALGC Accutest Laboratories Gulf Coast, Inc.
Project: ITTXHO: Longhorn Army Ammunition Plant

Sample: GGG826-ICV825
Lab FileID: GG018300.D

Evaluate Continuing Calibration Report

Signal #1 : G:\HPCHEM\1\DATA\1019ODS\GG018300.D\dad1B.ch Vial: 4
Signal #2 : G:\HPCHEM\1\DATA\1019ODS\GG018300.D\dad1A.ch
Acq On : 19-Oct-2006, 13:44:13 Operator: MIKEE
Sample : ICV825-500 Inst : G1315B
Misc : OP18222,ggg826,1000,,,10,,water Multiplr: 1.00
IntFile Signal #1: EVENTS.E IntFile Signal #2: EVENTS2.E

Method : C:\HPCHEM\1\METHODS\8330_EX.M (Chemstation Integrator)
Title : Explosives by 8330
Last Update : Thu Oct 19 11:32:41 2006
Response via : Multiple Level Calibration

Min. RRF : 0.000 Min. Rel. Area : 50% Max. R.T. Dev 0.50min
Max. RRF Dev : 15% Max. Rel. Area : 200%

		Compound	Amount	Calc.	%Drift	Area%	Dev(min)	RT Window
1		HMX		----------NA----------				
2		TNX	500.000	514.364	-2.9	0	0.00	4.15- 5.15
3		DNX	500.000	511.166	-2.2	0	0.00	4.58- 5.58
4		MNX	500.000	518.059	-3.6	0	-0.01	5.34- 6.34
5		RDX		----------NA----------				
6		1,3,5-Trinitrobenzene		----------NA----------				
7		1,3-Dinitrobenzene		----------NA----------				
8		Tetryl		----------NA----------				
9		Nitrobenzene		----------NA----------				
10	S	3,4-Dinitrotoluene		----------NA----------				
11		2,4,6-Trinitrotoluene		----------NA----------				
12		4-Amino-2,6-Dinitrotoluen		----------NA----------				
13		2-Amino-4,6-Dinitrotoluen		----------NA----------				
14		2,6-Dinitrotoluene		----------NA----------				
15		2,4-Dinitrotoluene		----------NA----------				
16		o-Nitrotoluene		----------NA----------				
17		p-Nitrotoluene		----------NA----------				
18		m-Nitrotoluene		----------NA----------				

***** Signal #2 *****

1		HMX		----------NA----------				
2		TNX	500.000	509.991	-2.0	0	0.00	4.15- 5.15
3		DNX	500.000	523.209	-4.6	0	0.00	4.58- 5.58
4		MNX	500.000	527.451	-5.5	0	-0.01	5.34- 6.34
5		RDX		----------NA----------				
6		1,3,5-Trinitrobenzene		----------NA----------				
7		1,3-Dinitrobenzene		----------NA----------				
8		Tetryl		----------NA----------				
9		Nitrobenzene		----------NA----------				
10	S	3,4-Dinitrotoluene		----------NA----------				
11		2,4,6-Trinitrotoluene		----------NA----------				
12		4-Amino-2,6-Dinitrotoluen		----------NA----------				
13		2-Amino-4,6-Dinitrotoluen		----------NA----------				
14		2,6-Dinitrotoluene		----------NA----------				
15		2,4-Dinitrotoluene		----------NA----------				
16		o-Nitrotoluene		----------NA----------				
17		p-Nitrotoluene		----------NA----------				
18		m-Nitrotoluene		----------NA----------				

Initial Calibration Verification

Job Number: T16411
Account: ALGC Accutest Laboratories Gulf Coast, Inc.
Project: ITTXHO: Longhorn Army Ammunition Plant

Sample: GGG826-ICV825
Lab FileID: GG018300.D

(#) = Out of Range SPCC's out = 0 CCC's out = 0
GG018286.D 8330_EX.M Fri Oct 20 16:54:56 2006

9.6

Initial Calibration Summary

Job Number: T16411
Account: ALGC Accutest Laboratories Gulf Coast, Inc.
Project: ITTXHO: Longhorn Army Ammunition Plant

Sample: GGG827-ICC827
Lab FileID: GG018316.D

Response Factor Report G1315B

Method : C:\HPCHEM\1\METHODS\8330_RP.M (Chemstation Integrator)
Title : Explosives by 8330
Last Update : Fri Oct 20 14:03:32 2006
Response via : Initial Calibration

Calibration Files
20 =GG018313.D 100 =GG018314.D 250 =GG018315.D 500 =GG018316.D
750 =GG018317.D 1000=GG018318.D 2000=GG018319.D

	Compound	20	100	250	500	750	1000	2000	Avg		%RSD
1)	TNX	6.022	6.861	7.022	6.686	6.915	6.925	7.121	6.793	E3	5.38
2)	HMX	2.976	2.856	2.642	2.478	2.489	2.481	2.586	2.644	E3	7.51
3)	DNX	5.820	5.904	5.816	5.437	5.628	5.545	5.823	5.710	E3	3.05
4)	MNX	4.717	4.981	5.224	5.007	5.063	4.976	5.294	5.037	E3	3.73
5)	1,3,5-Trinitroben	7.302	7.899	8.123	7.797	7.946	7.847	8.236	7.879	E3	3.78
6)	RDX	3.327	3.935	3.881	3.729	3.710	3.686	3.841	3.730	E3	5.39
7)	1,3-Dinitrobenzen	1.122	1.117	1.144	1.096	1.117	1.113	1.146	1.122	E4	1.56
8)	Nitrobenzene	6.720	7.206	7.440	7.104	7.286	7.290	7.513	7.223	E3	3.61
9)	2,4,6-Trinitrotol	7.126	7.674	7.812	7.517	7.651	7.587	7.941	7.615	E3	3.39
10)	Tetryl	5.119	5.755	6.124	6.105	6.006	5.862	6.470	5.920	E3	7.10
11)S	3,4-Dinitrotoluen	4.973	4.941	4.969	4.829	4.912	4.883	5.055	4.938	E3	1.46
12)	2,6-Dinitrotoluen	6.023	5.649	5.657	5.415	5.544	5.538	5.672	5.643	E3	3.38
13)	2,4-Dinitrotoluen	1.200	1.036	1.034	0.995	1.012	1.007	1.038	1.046	E4	6.68
14)	o-Nitrotoluene	5.021	4.648	4.729	4.526	4.679	4.666	4.837	4.729	E3	3.36
15)	p-Nitrotoluene	4.036	3.890	3.967	3.762	3.919	3.914	4.051	3.934	E3	2.49
16)	4-Amino-2,6-Dinit	5.109	5.368	5.518	5.300	5.406	5.380	5.621	5.386	E3	3.01
17)	m-Nitrotoluene	4.743	4.946	5.173	4.937	5.131	5.119	5.324	5.053	E3	3.79
18)	2-Amino-4,6-Dinit	7.249	7.503	7.692	7.547	7.548	7.525	7.845	7.558	E3	2.42

Signal #2

1)	TNX	0.828	1.032	1.066	1.024	1.037	1.032	1.073	1.013	E4	8.25
2)	HMX	8.967	9.716	9.270	8.345	8.192	8.095	8.326	8.702	E3	7.15
3)	DNX	0.786	1.108	1.019	0.937	0.919	0.897	0.935	0.943	E4	10.65
4)	MNX	7.457	8.346	8.580	8.147	8.087	7.895	8.399	8.130	E3	4.58
5)	1,3,5-Trinitroben	1.449	1.617	1.667	1.594	1.616	1.593	1.673	1.601	E4	4.64
6)	RDX	6.077	6.386	6.563	6.283	6.229	6.181	6.460	6.311	E3	2.67
7)	1,3-Dinitrobenzen	1.294	1.326	1.427	1.333	1.365	1.364	1.397	1.358	E4	3.31
8)	Nitrobenzene	3.190	3.096	3.823	3.281	3.391	3.385	3.476	3.378	E3	6.96
9)	2,4,6-Trinitrotol	1.098	1.109	1.152	1.104	1.122	1.113	1.169	1.124	E4	2.37
10)	Tetryl	0.953	1.028	1.114	1.113	1.085	1.059	1.177	1.075	E4	6.67
11)S	3,4-Dinitrotoluen	6.832	6.775	6.813	6.648	6.692	6.629	6.906	6.756	E3	1.53
12)	2,6-Dinitrotoluen	8.344	7.760	7.758	7.423	7.578	7.556	7.765	7.740	E3	3.83
13)	2,4-Dinitrotoluen	1.104	0.941	0.942	0.911	0.927	0.919	0.952	0.957	E4	6.94
14)	o-Nitrotoluene	3.189	2.755	2.867	2.791	2.895	2.880	3.025	2.915	E3	5.09
15)	p-Nitrotoluene	2.114	1.879	1.907	1.825	1.916	1.926	1.998	1.938	E3	4.82
16)	4-Amino-2,6-Dinit	1.431	1.486	1.522	1.459	1.490	1.484	1.552	1.489	E4	2.66
17)	m-Nitrotoluene	2.353	2.391	2.516	2.444	2.546	2.567	2.681	2.500	E3	4.52
18)	2-Amino-4,6-Dinit	1.233	1.258	1.276	1.258	1.253	1.255	1.311	1.263	E4	1.92

(#) = Out of Range

8330_RP.M Mon Oct 23 13:34:29 2006

9.6

Initial Calibration Verification

Job Number: T16411
Account: ALGC Accutest Laboratories Gulf Coast, Inc.
Project: ITTXHO: Longhorn Army Ammunition Plant

Sample: GGG827-ICV827
Lab FileID: GG018320.D

Evaluate Continuing Calibration Report

Signal #1 : G:\HPCHEM\1\DATA\1020RP\GG018320.D\dad1B.ch Vial: 10
Signal #2 : G:\HPCHEM\1\DATA\1020RP\GG018320.D\dad1A.ch
Acq On : 20-Oct-2006, 14:03:23 Operator: MIKEE
Sample : ICV827-250 Inst : G1315B
Misc : OP18202,ggg827,1000,,,10,,water Multiplr: 1.00
IntFile Signal #1: EVENTS.E IntFile Signal #2: events2.e

Method : C:\HPCHEM\1\METHODS\8330_RP.M (Chemstation Integrator)
Title : Explosives by 8330
Last Update : Fri Oct 20 14:03:32 2006
Response via : Multiple Level Calibration

Min. RRF : 0.000 Min. Rel. Area : 50% Max. R.T. Dev 0.50min
Max. RRF Dev : 15% Max. Rel. Area : 200%

	Compound	Amount	Calc.	%Drift	Area%	Dev(min)	RT Window
1	TNX	250.000	258.384	-3.4	100	0.00	4.21- 5.21
2	HMX	250.000	260.989	-4.4	104	0.00	4.69- 5.69
3	DNX	250.000	254.013	-1.6	100	0.00	4.83- 5.83
4	MNX	250.000	255.142	-2.1	98	0.00	5.66- 6.66
5	1,3,5-Trinitrobenzene	250.000	264.789	-5.9	103	0.00	6.12- 7.12
6	RDX	250.000	252.023	-0.8	97	0.00	6.51- 7.51
7	1,3-Dinitrobenzene	250.000	257.308	-2.9	101	0.00	7.70- 8.70
8	Nitrobenzene	250.000	266.121	-6.4	103	0.00	8.24- 9.24
9	2,4,6-Trinitrotoluene	250.000	268.228	-7.3	105	0.00	8.71- 9.71
10	Tetryl	250.000	205.504	17.8#	79	0.00	9.41-10.41
11 S	3,4-Dinitrotoluene		----------NA----------				
12	2,6-Dinitrotoluene	250.000	254.196	-1.7	101	0.00	10.49-11.49
13	2,4-Dinitrotoluene	250.000	244.946	2.0	99	0.00	10.95-11.95
14	o-Nitrotoluene	250.000	248.278	0.7	99	0.00	11.79-12.79
15	p-Nitrotoluene	250.000	258.872	-3.5	103	0.00	12.45-13.45
16	4-Amino-2,6-Dinitrotol	250.000	255.921	-2.4	100	0.00	12.83-13.83
17	m-Nitrotoluene	250.000	252.478	-1.0	99	0.00	13.29-14.29
18	2-Amino-4,6-Dinitrotol	250.000	236.039	5.6	93	0.00	14.31-15.31

***** Signal #2 *****

1	TNX	250.000	262.147	-4.9	100	0.00	4.22- 5.22
2	HMX	250.000	276.033	-10.4	104	0.00	4.69- 5.69
3	DNX	250.000	263.149	-5.3	97	0.00	4.83- 5.83
4	MNX	250.000	255.967	-2.4	97	0.00	5.66- 6.66
5	1,3,5-Trinitrobenzene	250.000	265.613	-6.2	102	0.00	6.12- 7.12
6	RDX	250.000	248.723	0.5	96	0.00	6.51- 7.51
7	1,3-Dinitrobenzene	250.000	276.649	-10.7	105	0.00	7.70- 8.70
8	Nitrobenzene	250.000	301.148	-20.5#	106	0.00	8.24- 9.24
9	2,4,6-Trinitrotoluene	250.000	269.121	-7.6	105	0.00	8.71- 9.71
10	Tetryl	250.000	203.173	18.7#	78	0.00	9.41-10.41
11 S	3,4-Dinitrotoluene		----------NA----------				
12	2,6-Dinitrotoluene	250.000	252.008	-0.8	101	0.00	10.49-11.49
13	2,4-Dinitrotoluene	250.000	241.694	3.3	98	0.00	10.95-11.95
14	o-Nitrotoluene	250.000	241.466	3.4	98	0.00	11.79-12.79
15	p-Nitrotoluene	250.000	250.555	-0.2	102	0.00	12.46-13.46
16	4-Amino-2,6-Dinitrotol	250.000	255.253	-2.1	100	0.00	12.83-13.83
17	m-Nitrotoluene	250.000	250.572	-0.2	100	0.00	13.28-14.28
18	2-Amino-4,6-Dinitrotol	250.000	234.881	6.0	93	0.00	14.31-15.31

Initial Calibration Verification

Job Number: T16411
Account: ALGC Accutest Laboratories Gulf Coast, Inc.
Project: ITTXHO: Longhorn Army Ammunition Plant

Sample: GGG827-ICV827
Lab FileID: GG018320.D

```
(#) = Out of Range                SPCC's out = 0  CCC's out = 0
 GG018315.D 8330_RP.M        Mon Oct 23 13:35:35 2006
```

Continuing Calibration Summary

Job Number: T16411
Account: ALGC Accutest Laboratories Gulf Coast, Inc.
Project: ITTXHO: Longhorn Army Ammunition Plant
Sample: GGG904-CC825
Lab FileID: GG020112.D

Evaluate Continuing Calibration Report

Signal #1 : G:\DATA\0227ODS\GG020112.D\dad1B.ch Vial: 2
Signal #2 : G:\DATA\0227ODS\GG020112.D\dad1A.ch
Acq On : 27-Feb-2007, 15:07:27 Operator: MIKEE
Sample : CC825-500 Inst : G1315B
Misc : OP19630,ggg904,1000,,,10,,water Multiplr: 1.00
IntFile Signal #1: EVENTS.E IntFile Signal #2: EVENTS2.E

Method : C:\HPCHEM\1\METHODS\8330_EX.M (Chemstation Integrator)
Title : Explosives by 8330
Last Update : Thu Mar 01 11:02:09 2007
Response via : Multiple Level Calibration

Min. RRF : 0.000 Min. Rel. Area : 50% Max. R.T. Dev 0.50min
Max. RRF Dev : 15% Max. Rel. Area : 200%

	Compound	Amount	Calc.	%Drift	Area%	Dev(min)	RT Window
1	HMX	500.000	861.245	-72.2#	177	0.00	3.86- 4.86
2	TNX	500.000	510.794	-2.2	103	-0.02	4.20- 5.20
3	DNX	500.000	506.900	-1.4	103	0.00	4.60- 5.60
4	MNX	500.000	503.878	-0.8	103	0.00	5.37- 6.37
5	RDX	500.000	552.400	-10.5	111	0.00	6.15- 7.15
6	1,3,5-Trinitrobenzene	500.000	490.330	1.9	101	0.00	8.43- 9.43
7	1,3-Dinitrobenzene	500.000	492.556	1.5	101	0.00	10.43-11.43
8	Tetryl	500.000	492.314	1.5	100	0.02	11.21-12.21
9	Nitrobenzene	500.000	500.074	-0.0	104	0.00	11.93-12.93
10 S	3,4-Dinitrotoluene	500.000	486.630	2.7	100	0.02	12.95-13.95
11	2,4,6-Trinitrotoluene	500.000	498.410	0.3	102	0.02	13.60-14.60
12	4-Amino-2,6-Dinitrotol	500.000	490.908	1.8	101	0.03	14.37-15.37
13	2-Amino-4,6-Dinitrotol	500.000	498.514	0.3	102	0.03	15.14-16.14
14	2,6-Dinitrotoluene	500.000	480.354	3.9	101	0.02	16.10-17.10
15	2,4-Dinitrotoluene	500.000	487.505	2.5	103	0.02	16.60-17.60
16	o-Nitrotoluene	500.000	485.983	2.8	104	0.00	19.73-20.73
17	p-Nitrotoluene	500.000	496.713	0.7	105	0.00	21.06-22.06
18	m-Nitrotoluene	500.000	498.379	0.3	104	0.00	22.76-23.76

***** Signal #2 *****

1	HMX	500.000	880.230	-76.0#	179	0.00	3.86- 4.86
2	TNX	500.000	507.955	-1.6	103	0.00	4.18- 5.18
3	DNX	500.000	513.506	-2.7	103	0.00	4.60- 5.60
4	MNX	500.000	515.058	-3.0	104	0.00	5.37- 6.37
5	RDX	500.000	571.879	-14.4	112	0.00	6.15- 7.15
6	1,3,5-Trinitrobenzene	500.000	497.471	0.5	102	0.00	8.43- 9.43
7	1,3-Dinitrobenzene	500.000	494.537	1.1	101	0.00	10.43-11.43
8	Tetryl	500.000	498.021	0.4	100	0.02	11.21-12.21
9	Nitrobenzene	500.000	491.840	1.6	101	0.00	11.93-12.93
10 S	3,4-Dinitrotoluene	500.000	483.141	3.4	99	0.01	12.95-13.95
11	2,4,6-Trinitrotoluene	500.000	496.140	0.8	102	0.02	13.60-14.60
12	4-Amino-2,6-Dinitrotol	500.000	491.387	1.7	101	0.03	14.37-15.37
13	2-Amino-4,6-Dinitrotol	500.000	499.381	0.1	103	0.03	15.14-16.14
14	2,6-Dinitrotoluene	500.000	484.237	3.2	103	0.02	16.10-17.10
15	2,4-Dinitrotoluene	500.000	477.289	4.5	101	0.01	16.60-17.60
16	o-Nitrotoluene	500.000	485.916	2.8	104	0.00	19.73-20.73
17	p-Nitrotoluene	500.000	495.972	0.8	105	0.00	21.06-22.06
18	m-Nitrotoluene	500.000	505.343	-1.1	105	0.00	22.77-23.77

Continuing Calibration Summary

Job Number: T16411
Account: ALGC Accutest Laboratories Gulf Coast, Inc.
Project: ITTXHO: Longhorn Army Ammunition Plant

Sample: GGG904-CC825
Lab FileID: GG020112.D

(#) = Out of Range SPCC's out = 0 CCC's out = 0
GG018282.D 8330_EX.M Thu Mar 01 13:07:14 2007

9.6

Continuing Calibration Summary

Job Number: T16411
Account: ALGC Accutest Laboratories Gulf Coast, Inc.
Project: ITTXHO: Longhorn Army Ammunition Plant

Sample: GGG904-CC825
Lab FileID: GG020123.D

Evaluate Continuing Calibration Report

Signal #1 : G:\DATA\0227ODS\GG020123.D\dad1B.ch Vial: 2
Signal #2 : G:\DATA\0227ODS\GG020123.D\dad1A.ch
Acq On : 27-Feb-2007, 20:10:35 Operator: MIKEE
Sample : CC825-500 Inst : G1315B
Misc : OP19630,ggg904,1000,,,10,,water Multiplr: 1.00
IntFile Signal #1: EVENTS.E IntFile Signal #2: EVENTS2.E

Method : C:\HPCHEM\1\METHODS\8330_EX.M (Chemstation Integrator)
Title : Explosives by 8330
Last Update : Thu Mar 01 11:02:09 2007
Response via : Multiple Level Calibration

Min. RRF : 0.000 Min. Rel. Area : 50% Max. R.T. Dev 0.50min
Max. RRF Dev : 15% Max. Rel. Area : 200%

		Compound	Amount	Calc.	%Drift	Area%	Dev(min)	RT Window
1		HMX	500.000	863.172	-72.6#	177	0.00	3.86- 4.86
2		TNX	500.000	510.727	-2.1	103	-0.01	4.20- 5.20
3		DNX	500.000	510.916	-2.2	104	0.01	4.60- 5.60
4		MNX	500.000	506.368	-1.3	104	0.01	5.37- 6.37
5		RDX	500.000	552.024	-10.4	111	0.00	6.15- 7.15
6		1,3,5-Trinitrobenzene	500.000	492.210	1.6	102	0.03	8.43- 9.43
7		1,3-Dinitrobenzene	500.000	490.970	1.8	101	0.03	10.43-11.43
8		Tetryl	500.000	492.506	1.5	101	0.05	11.21-12.21
9		Nitrobenzene	500.000	495.993	0.8	103	0.03	11.93-12.93
10	S	3,4-Dinitrotoluene	500.000	483.655	3.3	99	0.05	12.95-13.95
11		2,4,6-Trinitrotoluene	500.000	499.260	0.1	102	0.05	13.60-14.60
12		4-Amino-2,6-Dinitrotol	500.000	490.118	2.0	100	0.08	14.37-15.37
13		2-Amino-4,6-Dinitrotol	500.000	498.867	0.2	102	0.08	15.14-16.14
14		2,6-Dinitrotoluene	500.000	483.943	3.2	101	0.07	16.10-17.10
15		2,4-Dinitrotoluene	500.000	483.189	3.4	102	0.07	16.60-17.60
16		o-Nitrotoluene	500.000	480.057	4.0	103	0.06	19.73-20.73
17		p-Nitrotoluene	500.000	486.687	2.7	103	0.07	21.06-22.06
18		m-Nitrotoluene	500.000	499.963	0.0	104	0.08	22.76-23.76

***** Signal #2 *****

1		HMX	500.000	878.981	-75.8#	178	0.00	3.86- 4.86
2		TNX	500.000	507.479	-1.5	103	0.00	4.18- 5.18
3		DNX	500.000	515.325	-3.1	103	0.01	4.60- 5.60
4		MNX	500.000	517.495	-3.5	105	0.01	5.37- 6.37
5		RDX	500.000	573.980	-14.8	113	0.00	6.15- 7.15
6		1,3,5-Trinitrobenzene	500.000	498.212	0.4	102	0.03	8.43- 9.43
7		1,3-Dinitrobenzene	500.000	493.984	1.2	100	0.03	10.43-11.43
8		Tetryl	500.000	498.348	0.3	100	0.05	11.21-12.21
9		Nitrobenzene	500.000	485.381	2.9	100	0.03	11.93-12.93
10	S	3,4-Dinitrotoluene	500.000	477.388	4.5	97	0.05	12.95-13.95
11		2,4,6-Trinitrotoluene	500.000	495.190	1.0	102	0.05	13.60-14.60
12		4-Amino-2,6-Dinitrotol	500.000	490.438	1.9	101	0.07	14.37-15.37
13		2-Amino-4,6-Dinitrotol	500.000	498.460	0.3	103	0.08	15.14-16.14
14		2,6-Dinitrotoluene	500.000	482.315	3.5	102	0.07	16.10-17.10
15		2,4-Dinitrotoluene	500.000	479.653	4.1	101	0.07	16.60-17.60
16		o-Nitrotoluene	500.000	487.394	2.5	104	0.06	19.73-20.73
17		p-Nitrotoluene	500.000	491.569	1.7	104	0.07	21.06-22.06
18		m-Nitrotoluene	500.000	501.875	-0.4	104	0.08	22.77-23.77

Continuing Calibration Summary

Job Number: T16411
Account: ALGC Accutest Laboratories Gulf Coast, Inc.
Project: ITTXHO: Longhorn Army Ammunition Plant

Sample: GGG904-CC825
Lab FileID: GG020123.D

(#) = Out of Range SPCC's out = 0 CCC's out = 0
GG018282.D 8330_EX.M Thu Mar 01 13:07:14 2007

9.6

Continuing Calibration Summary

Job Number: T16411
Account: ALGC Accutest Laboratories Gulf Coast, Inc.
Project: ITTXHO: Longhorn Army Ammunition Plant

Sample: GGG904-CC825
Lab FileID: GG020166.D

Evaluate Continuing Calibration Report

Signal #1 : G:\DATA\0227ODS\GG020166.D\dad1B.ch Vial: 3
Signal #2 : G:\DATA\0227ODS\GG020166.D\dad1A.ch
Acq On : 28-Feb-2007, 16:02:03 Operator: MIKEE
Sample : CC825-1000 Inst : G1315B
Misc : OP19589,ggg904,2.00,,,20,,soil Multiplr: 1.00
IntFile Signal #1: EVENTS.E IntFile Signal #2: EVENTS2.E

Method : C:\HPCHEM\1\METHODS\8330_EX.M (Chemstation Integrator)
Title : Explosives by 8330
Last Update : Thu Mar 01 11:02:09 2007
Response via : Multiple Level Calibration

Min. RRF : 0.000 Min. Rel. Area : 50% Max. R.T. Dev 0.50min
Max. RRF Dev : 15% Max. Rel. Area : 200%

	Compound	Amount	Calc.	%Drift	Area%	Dev(min)	RT Window
1	HMX	1000.000	976.886	2.3	99	-0.01	3.86- 4.86
2	TNX	1000.000	1020.161	-2.0	101	-0.02	4.20- 5.20
3	DNX	1000.000	1010.898	-1.1	101	0.00	4.60- 5.60
4	MNX	1000.000	1001.672	-0.2	101	-0.01	5.37- 6.37
5	RDX	1000.000	1005.151	-0.5	100	-0.03	6.15- 7.15
6	1,3,5-Trinitrobenzene	1000.000	983.375	1.7	99	-0.01	8.43- 9.43
7	1,3-Dinitrobenzene	1000.000	985.892	1.4	99	-0.02	10.43-11.43
8	Tetryl	1000.000	978.411	2.2	98	-0.03	11.21-12.21
9	Nitrobenzene	1000.000	981.508	1.8	99	-0.01	11.93-12.93
10 S	3,4-Dinitrotoluene	1000.000	960.214	4.0	97	-0.02	12.95-13.95
11	2,4,6-Trinitrotoluene	1000.000	994.844	0.5	100	-0.01	13.60-14.60
12	4-Amino-2,6-Dinitrotol	1000.000	982.608	1.7	99	-0.02	14.37-15.37
13	2-Amino-4,6-Dinitrotol	1000.000	1000.306	-0.0	100	-0.02	15.14-16.14
14	2,6-Dinitrotoluene	1000.000	981.502	1.8	100	-0.01	16.10-17.10
15	2,4-Dinitrotoluene	1000.000	969.833	3.0	100	-0.02	16.60-17.60
16	o-Nitrotoluene	1000.000	976.020	2.4	100	-0.02	19.73-20.73
17	p-Nitrotoluene	1000.000	998.363	0.2	102	-0.02	21.06-22.06
18	m-Nitrotoluene	1000.000	1003.931	-0.4	101	-0.01	22.76-23.76

***** Signal #2 *****

1	HMX	1000.000	993.340	0.7	100	-0.01	3.86- 4.86
2	TNX	1000.000	1013.254	-1.3	101	0.00	4.18- 5.18
3	DNX	1000.000	1027.579	-2.8	103	0.00	4.60- 5.60
4	MNX	1000.000	1028.482	-2.8	103	-0.01	5.37- 6.37
5	RDX	1000.000	1079.137	-7.9	104	-0.03	6.15- 7.15
6	1,3,5-Trinitrobenzene	1000.000	1005.009	-0.5	101	-0.01	8.43- 9.43
7	1,3-Dinitrobenzene	1000.000	993.035	0.7	99	-0.02	10.43-11.43
8	Tetryl	1000.000	1000.774	-0.1	100	-0.03	11.21-12.21
9	Nitrobenzene	1000.000	967.926	3.2	99	-0.01	11.93-12.93
10 S	3,4-Dinitrotoluene	1000.000	961.248	3.9	98	-0.02	12.95-13.95
11	2,4,6-Trinitrotoluene	1000.000	991.046	0.9	100	-0.01	13.60-14.60
12	4-Amino-2,6-Dinitrotol	1000.000	985.363	1.5	99	-0.02	14.37-15.37
13	2-Amino-4,6-Dinitrotol	1000.000	996.347	0.4	101	-0.02	15.14-16.14
14	2,6-Dinitrotoluene	1000.000	970.579	2.9	101	-0.01	16.10-17.10
15	2,4-Dinitrotoluene	1000.000	960.647	3.9	100	-0.02	16.60-17.60
16	o-Nitrotoluene	1000.000	974.674	2.5	99	-0.02	19.73-20.73
17	p-Nitrotoluene	1000.000	992.075	0.8	100	-0.02	21.06-22.06
18	m-Nitrotoluene	1000.000	1006.058	-0.6	100	-0.02	22.77-23.77

Continuing Calibration Summary

Job Number: T16411
Account: ALGC Accutest Laboratories Gulf Coast, Inc.
Project: ITTXHO: Longhorn Army Ammunition Plant

Sample: GGG904-CC825
Lab FileID: GG020166.D

```
(#) = Out of Range                SPCC's out = 0  CCC's out = 0
 GG018284.D 8330_EX.M         Thu Mar 01 11:49:46 2007
```

Continuing Calibration Summary

Job Number: T16411
Account: ALGC Accutest Laboratories Gulf Coast, Inc.
Project: ITTXHO: Longhorn Army Ammunition Plant

Sample: GGG904-CC825
Lab FileID: GG020178.D

Evaluate Continuing Calibration Report

Signal #1 : G:\DATA\0227ODS\GG020178.D\dad1B.ch Vial: 3
Signal #2 : G:\DATA\0227ODS\GG020178.D\dad1A.ch
Acq On : 28-Feb-2007, 21:33:36 Operator: MIKEE
Sample : CC825-1000 Inst : G1315B
Misc : OP19656,ggg904,2.00,,,20,,soil Multiplr: 1.00
IntFile Signal #1: EVENTS.E IntFile Signal #2: EVENTS2.E

Method : C:\HPCHEM\1\METHODS\8330_EX.M (Chemstation Integrator)
Title : Explosives by 8330
Last Update : Thu Mar 01 11:02:09 2007
Response via : Multiple Level Calibration

Min. RRF : 0.000 Min. Rel. Area : 50% Max. R.T. Dev 0.50min
Max. RRF Dev : 15% Max. Rel. Area : 200%

	Compound	Amount	Calc.	%Drift	Area%	Dev(min)	RT Window
1	HMX	1000.000	979.852	2.0	99	-0.01	3.86- 4.86
2	TNX	1000.000	1020.353	-2.0	101	-0.02	4.20- 5.20
3	DNX	1000.000	1021.165	-2.1	102	0.00	4.60- 5.60
4	MNX	1000.000	1009.347	-0.9	101	-0.01	5.37- 6.37
5	RDX	1000.000	1010.783	-1.1	100	-0.03	6.15- 7.15
6	1,3,5-Trinitrobenzene	1000.000	992.569	0.7	100	-0.01	8.43- 9.43
7	1,3-Dinitrobenzene	1000.000	987.520	1.2	99	-0.02	10.43-11.43
8	Tetryl	1000.000	991.603	0.8	100	-0.04	11.21-12.21
9	Nitrobenzene	1000.000	988.345	1.2	99	-0.01	11.93-12.93
10 S	3,4-Dinitrotoluene	1000.000	967.313	3.3	97	-0.03	12.95-13.95
11	2,4,6-Trinitrotoluene	1000.000	998.111	0.2	100	-0.03	13.60-14.60
12	4-Amino-2,6-Dinitrotol	1000.000	979.912	2.0	98	-0.04	14.37-15.37
13	2-Amino-4,6-Dinitrotol	1000.000	1002.882	-0.3	101	-0.04	15.14-16.14
14	2,6-Dinitrotoluene	1000.000	993.848	0.6	102	-0.03	16.10-17.10
15	2,4-Dinitrotoluene	1000.000	973.356	2.7	100	-0.03	16.60-17.60
16	o-Nitrotoluene	1000.000	991.316	0.9	102	-0.03	19.73-20.73
17	p-Nitrotoluene	1000.000	1006.330	-0.6	102	-0.03	21.06-22.06
18	m-Nitrotoluene	1000.000	1006.337	-0.6	101	-0.03	22.76-23.76

***** Signal #2 *****

1	HMX	1000.000	993.457	0.7	100	-0.01	3.86- 4.86
2	TNX	1000.000	1013.005	-1.3	101	0.00	4.18- 5.18
3	DNX	1000.000	1028.970	-2.9	103	0.00	4.60- 5.60
4	MNX	1000.000	1021.470	-2.1	103	-0.01	5.37- 6.37
5	RDX	1000.000	1069.147	-6.9	103	-0.03	6.15- 7.15
6	1,3,5-Trinitrobenzene	1000.000	999.211	0.1	100	-0.01	8.43- 9.43
7	1,3-Dinitrobenzene	1000.000	993.686	0.6	99	-0.02	10.43-11.43
8	Tetryl	1000.000	1004.494	-0.4	100	-0.04	11.21-12.21
9	Nitrobenzene	1000.000	958.453	4.2	98	-0.01	11.93-12.93
10 S	3,4-Dinitrotoluene	1000.000	955.621	4.4	97	-0.03	12.95-13.95
11	2,4,6-Trinitrotoluene	1000.000	988.837	1.1	100	-0.03	13.60-14.60
12	4-Amino-2,6-Dinitrotol	1000.000	980.065	2.0	99	-0.04	14.37-15.37
13	2-Amino-4,6-Dinitrotol	1000.000	997.096	0.3	101	-0.04	15.14-16.14
14	2,6-Dinitrotoluene	1000.000	976.669	2.3	101	-0.03	16.10-17.10
15	2,4-Dinitrotoluene	1000.000	959.581	4.0	100	-0.03	16.60-17.60
16	o-Nitrotoluene	1000.000	993.323	0.7	101	-0.03	19.73-20.73
17	p-Nitrotoluene	1000.000	1004.376	-0.4	101	-0.03	21.06-22.06
18	m-Nitrotoluene	1000.000	1016.726	-1.7	101	-0.03	22.77-23.77

Continuing Calibration Summary

Job Number: T16411
Account: ALGC Accutest Laboratories Gulf Coast, Inc.
Project: ITTXHO: Longhorn Army Ammunition Plant

Sample: GGG904-CC825
Lab FileID: GG020178.D

```
(#) = Out of Range                SPCC's out = 0  CCC's out = 0
 GG018284.D 8330_EX.M         Thu Mar 01 11:49:46 2007
```

9.6

Continuing Calibration Summary

Job Number: T16411
Account: ALGC Accutest Laboratories Gulf Coast, Inc.
Project: ITTXHO: Longhorn Army Ammunition Plant

Sample: GGG905-CC827
Lab FileID: GG020186.D

Evaluate Continuing Calibration Report

Signal #1 : G:\DATA\0301RP\GG020186.D\dad1B.ch Vial: 2
Signal #2 : G:\DATA\0301RP\GG020186.D\dad1A.ch
Acq On : 01-Mar-2007, 10:47:39 Operator: MIKEE
Sample : CC827-500 Inst : G1315B
Misc : OP19630,ggg905,1000,,,10,,water Multiplr: 1.00
IntFile Signal #1: EVENTS.E IntFile Signal #2: events2.e

Method : C:\HPCHEM\1\METHODS\8330_RP.M (Chemstation Integrator)
Title : Explosives by 8330
Last Update : Fri Jan 26 08:35:20 2007
Response via : Multiple Level Calibration

Min. RRF : 0.000 Min. Rel. Area : 50% Max. R.T. Dev 0.50min
Max. RRF Dev : 15% Max. Rel. Area : 200%

	Compound	Amount	Calc.	%Drift	Area%	Dev(min)	RT Window
1	TNX	500.000	500.367	-0.1	102	0.02	4.24- 5.24
2	HMX	500.000	496.427	0.7	106	0.00	4.75- 5.75
3	DNX	500.000	482.515	3.5	101	0.00	4.87- 5.87
4	MNX	500.000	515.963	-3.2	104	0.00	5.72- 6.72
5	1,3,5-Trinitrobenzene	500.000	503.148	-0.6	102	0.00	6.17- 7.17
6	RDX	500.000	499.191	0.2	100	0.01	6.56- 7.56
7	1,3-Dinitrobenzene	500.000	491.887	1.6	101	-0.02	7.78- 8.78
8	Nitrobenzene	500.000	506.416	-1.3	103	0.00	8.29- 9.29
9	2,4,6-Trinitrotoluene	500.000	500.527	-0.1	101	-0.03	8.80- 9.80
10	Tetryl	500.000	530.339	-6.1	103	-0.01	9.52-10.52
11 S	3,4-Dinitrotoluene	500.000	486.902	2.6	100	0.00	10.21-11.21
12	2,6-Dinitrotoluene	500.000	481.130	3.8	100	-0.03	10.59-11.59
13	2,4-Dinitrotoluene	500.000	477.442	4.5	100	-0.04	11.06-12.06
14	o-Nitrotoluene	500.000	496.217	0.8	104	-0.03	11.86-12.86
15	p-Nitrotoluene	500.000	501.970	-0.4	105	-0.03	12.53-13.53
16	4-Amino-2,6-Dinitrotol	500.000	493.489	1.3	100	-0.02	12.95-13.95
17	m-Nitrotoluene	500.000	518.753	-3.8	106	-0.04	13.38-14.38
18	2-Amino-4,6-Dinitrotol	500.000	499.837	0.0	100	-0.03	14.45-15.45

***** Signal #2 *****

1	TNX	500.000	516.090	-3.2	102	0.02	4.24- 5.24
2	HMX	500.000	476.869	4.6	99	0.00	4.75- 5.75
3	DNX	500.000	503.539	-0.7	101	0.00	4.87- 5.87
4	MNX	500.000	507.399	-1.5	101	0.00	5.72- 6.72
5	1,3,5-Trinitrobenzene	500.000	502.762	-0.6	101	0.00	6.17- 7.17
6	RDX	500.000	515.962	-3.2	104	0.01	6.56- 7.56
7	1,3-Dinitrobenzene	500.000	491.883	1.6	100	-0.02	7.78- 8.78
8	Nitrobenzene	500.000	487.140	2.6	100	0.00	8.29- 9.29
9	2,4,6-Trinitrotoluene	500.000	493.768	1.2	101	-0.03	8.80- 9.80
10	Tetryl	500.000	525.509	-5.1	102	-0.01	9.52-10.52
11 S	3,4-Dinitrotoluene	500.000	478.913	4.2	97	0.00	10.21-11.21
12	2,6-Dinitrotoluene	500.000	476.400	4.7	99	-0.03	10.59-11.59
13	2,4-Dinitrotoluene	500.000	471.636	5.7	99	-0.04	11.06-12.06
14	o-Nitrotoluene	500.000	479.488	4.1	100	-0.03	11.86-12.86
15	p-Nitrotoluene	500.000	499.073	0.2	106	-0.02	12.54-13.54
16	4-Amino-2,6-Dinitrotol	500.000	493.318	1.3	101	-0.02	12.95-13.95
17	m-Nitrotoluene	500.000	512.966	-2.6	105	-0.04	13.37-14.37
18	2-Amino-4,6-Dinitrotol	500.000	496.978	0.6	100	-0.03	14.45-15.45

9.6

Continuing Calibration Summary

Job Number: T16411
Account: ALGC Accutest Laboratories Gulf Coast, Inc.
Project: ITTXHO: Longhorn Army Ammunition Plant

Sample: GGG905-CC827
Lab FileID: GG020186.D

```
(#) = Out of Range                SPCC's out = 0  CCC's out = 0
 GG018316.D 8330_RP.M         Fri Mar 02 08:20:28 2007
```

Continuing Calibration Summary

Job Number: T16411
Account: ALGC Accutest Laboratories Gulf Coast, Inc.
Project: ITTXHO: Longhorn Army Ammunition Plant

Sample: GGG905-ECC827
Lab FileID: GG020197.D

Evaluate Continuing Calibration Report

Signal #1 : G:\DATA\0301RP\GG020197.D\dad1B.ch Vial: 3
Signal #2 : G:\DATA\0301RP\GG020197.D\dad1A.ch
Acq On : 01-Mar-2007, 14:22:52 Operator: MIKEE
Sample : ECC827-1000 Inst : G1315B
Misc : OP19656,ggg905,2.00,,,20,,soil Multiplr: 1.00
IntFile Signal #1: EVENTS.E IntFile Signal #2: events2.e

Method : C:\HPCHEM\1\METHODS\8330_RP.M (Chemstation Integrator)
Title : Explosives by 8330
Last Update : Fri Jan 26 08:35:20 2007
Response via : Multiple Level Calibration

Min. RRF : 0.000 Min. Rel. Area : 50% Max. R.T. Dev 0.50min
Max. RRF Dev : 15% Max. Rel. Area : 200%

	Compound	Amount	Calc.	%Drift	Area%	Dev(min)	RT Window
1	TNX	1000.000	1004.955	-0.5	99	0.02	4.24- 5.24
2	HMX	1000.000	917.636	8.2	98	0.00	4.75- 5.75
3	DNX	1000.000	1011.140	-1.1	104	0.01	4.87- 5.87
4	MNX	1000.000	1039.196	-3.9	105	0.00	5.72- 6.72
5	1,3,5-Trinitrobenzene	1000.000	1013.030	-1.3	102	0.00	6.17- 7.17
6	RDX	1000.000	995.726	0.4	101	0.02	6.56- 7.56
7	1,3-Dinitrobenzene	1000.000	993.807	0.6	100	0.00	7.78- 8.78
8	Nitrobenzene	1000.000	1041.178	-4.1	103	0.00	8.29- 9.29
9	2,4,6-Trinitrotoluene	1000.000	1069.475	-6.9	107	-0.01	8.80- 9.80
10	Tetryl	1000.000	1115.023	-11.5	113	0.00	9.52-10.52
11 S	3,4-Dinitrotoluene	1000.000	985.365	1.5	100	0.01	10.21-11.21
12	2,6-Dinitrotoluene	1000.000	971.945	2.8	99	-0.01	10.59-11.59
13	2,4-Dinitrotoluene	1000.000	961.600	3.8	100	-0.02	11.06-12.06
14	o-Nitrotoluene	1000.000	992.619	0.7	101	0.00	11.86-12.86
15	p-Nitrotoluene	1000.000	1003.275	-0.3	101	0.00	12.53-13.53
16	4-Amino-2,6-Dinitrotol	1000.000	995.204	0.5	100	0.00	12.95-13.95
17	m-Nitrotoluene	1000.000	1036.245	-3.6	102	-0.02	13.38-14.38
18	2-Amino-4,6-Dinitrotol	1000.000	1004.422	-0.4	101	0.00	14.45-15.45

***** Signal #2 *****

1	TNX	1000.000	1021.114	-2.1	100	0.02	4.24- 5.24
2	HMX	1000.000	925.142	7.5	99	0.00	4.75- 5.75
3	DNX	1000.000	985.766	1.4	104	0.01	4.87- 5.87
4	MNX	1000.000	1019.924	-2.0	105	0.00	5.72- 6.72
5	1,3,5-Trinitrobenzene	1000.000	1011.841	-1.2	102	0.00	6.17- 7.17
6	RDX	1000.000	998.846	0.1	102	0.02	6.56- 7.56
7	1,3-Dinitrobenzene	1000.000	995.060	0.5	99	0.00	7.78- 8.78
8	Nitrobenzene	1000.000	1010.144	-1.0	101	0.00	8.29- 9.29
9	2,4,6-Trinitrotoluene	1000.000	1019.746	-2.0	103	-0.01	8.80- 9.80
10	Tetryl	1000.000	1078.605	-7.9	110	0.00	9.52-10.52
11 S	3,4-Dinitrotoluene	1000.000	972.193	2.8	99	0.01	10.21-11.21
12	2,6-Dinitrotoluene	1000.000	967.138	3.3	99	-0.01	10.59-11.59
13	2,4-Dinitrotoluene	1000.000	960.105	4.0	100	-0.02	11.06-12.06
14	o-Nitrotoluene	1000.000	991.930	0.8	100	0.00	11.86-12.86
15	p-Nitrotoluene	1000.000	1038.399	-3.8	104	0.00	12.54-13.54
16	4-Amino-2,6-Dinitrotol	1000.000	998.474	0.2	100	0.00	12.95-13.95
17	m-Nitrotoluene	1000.000	1059.730	-6.0	103	-0.02	13.37-14.37
18	2-Amino-4,6-Dinitrotol	1000.000	1004.726	-0.5	101	0.00	14.45-15.45

Continuing Calibration Summary

Job Number: T16411
Account: ALGC Accutest Laboratories Gulf Coast, Inc.
Project: ITTXHO: Longhorn Army Ammunition Plant

Sample: GGG905-ECC827
Lab FileID: GG020197.D

```
(#) = Out of Range                SPCC's out = 0  CCC's out = 0
 GG018318.D 8330_RP.M         Fri Mar 02 08:20:14 2007
```

General Chemistry

QC Data Summaries

(Accutest Laboratories Southeast, Inc.)

Includes the following where applicable:

- Method Blank and Blank Spike Summaries
- Duplicate Summaries
- Matrix Spike Summaries
- Instrument Runlogs/QC

METHOD BLANK AND SPIKE RESULTS SUMMARY
GENERAL CHEMISTRY

Login Number: T16411
Account: ALGC - Accutest Laboratories Gulf Coast, Inc.
Project: ITTXHO: Longhorn Army Ammunition Plant

Analyte	Batch ID	RL	MB Result	Units	Spike Amount	BSP Result	BSP %Recov	QC Limits
Perchlorate	GP9043/GN24390	10	<10	ug/l	50	48.0	96.0	85-115%

Associated Samples:
Batch GP9043: T16411-1, T16411-10, T16411-2, T16411-3, T16411-4, T16411-5, T16411-6, T16411-7, T16411-8, T16411-9
(*) Outside of QC limits

10.1 10

DUPLICATE RESULTS SUMMARY
GENERAL CHEMISTRY

Login Number: T16411
Account: ALGC - Accutest Laboratories Gulf Coast, Inc.
Project: ITTXHO: Longhorn Army Ammunition Plant

Analyte	Batch ID	QC Sample	Units	Original Result	DUP Result	RPD	QC Limits
Perchlorate	GP9043/GN24390	T16411-10	ug/l	4.0 U	<10	0.0	0-15%
Perchlorate	GP9043/GN24390	T16411-1	ug/l	4.0 U	<10	0.0	0-15%

Associated Samples:
Batch GP9043: T16411-1, T16411-10, T16411-2, T16411-3, T16411-4, T16411-5, T16411-6, T16411-7, T16411-8, T16411-9
(*) Outside of QC limits

10.2 10

MATRIX SPIKE RESULTS SUMMARY
GENERAL CHEMISTRY

Login Number: T16411
Account: ALGC - Accutest Laboratories Gulf Coast, Inc.
Project: ITTXHO: Longhorn Army Ammunition Plant

Analyte	Batch ID	QC Sample	Units	Original Result	Spike Amount	MS Result	%Rec	QC Limits
Perchlorate	GP9043/GN24390	T16411-10	ug/l	4.0 U	50	48.4	96.8	80-120%
Perchlorate	GP9043/GN24390	T16411-1	ug/l	4.0 U	50	48.7	97.4	80-120%

Associated Samples:
Batch GP9043: T16411-1, T16411-10, T16411-2, T16411-3, T16411-4, T16411-5, T16411-6, T16411-7, T16411-8, T16411-9
(*) Outside of QC limits
(N) Matrix Spike Rec. outside of QC limits

10.3 10

Accutest Laboratories Instrument Runlog
Inorganics Analyses

Login Number: T16411
Account: ALGC - Accutest Laboratories Gulf Coast, Inc.
Project: ITTXHO: Longhorn Army Ammunition Plant

File ID: 207030101.TXT
Analyst: MP
Parameters: Perchlorate

Date Analyzed: 03/01/07
Run ID: GN24390

Methods: EPA 314

Time	Sample Description	Dilution Factor	PS Recov	Comments
13:57	GN24390-CCV1	1		
14:11	GN24390-CCB1	1		
14:25	GP9043-MB1	1		
14:40	GP9043-B1	1		
14:54	GN24390-CRI1	1		
15:09	GN24390-IPC1	1		
15:23	ZZZZZZ	1		
15:37	ZZZZZZ	1		
15:52	ZZZZZZ	1		
16:06	T16411-1	1		
16:21	T16411-2	1		
16:35	T16411-3	1		
16:50	GN24390-CCV2	1		
17:04	GN24390-CCB2	1		
17:18	T16411-4	1		
17:33	T16411-5	1		
17:47	T16411-6	1		
18:02	T16411-7	1		
18:16	T16411-8	1		
18:30	T16411-9	1		
18:45	T16411-10	1		
18:59	ZZZZZZ	1		
19:14	ZZZZZZ	1		
19:28	ZZZZZZ	1		
19:42	GN24390-CCV3	1		
19:57	GN24390-CCB3	1		
20:11	ZZZZZZ	1		
20:26	ZZZZZZ	1		
20:40	ZZZZZZ	1		
20:54	GP9043-D1	1		
21:09	GP9043-S1	1		
21:23	GP9043-D2	1		
21:38	GP9043-S2	1		

Accutest Laboratories Instrument Runlog
Inorganics Analyses

Login Number: T16411
Account: ALGC - Accutest Laboratories Gulf Coast, Inc.
Project: ITTXHO: Longhorn Army Ammunition Plant

File ID: 207030101.TXT Date Analyzed: 03/01/07 Methods: EPA 314
Analyst: MP Run ID: GN24390
Parameters: Perchlorate

Time	Sample Description	Dilution Factor	PS Recov	Comments
21:52	GN24390-CCV4	1		
22:06	GN24390-CCB4	1		

Refer to raw data for calibration curve and standards.

10.4 10

Instrument QC Summary
Inorganics Analyses

Login Number: T16411
Account: ALGC - Accutest Laboratories Gulf Coast, Inc.
Project: ITTXHO: Longhorn Army Ammunition Plant

File ID: 207030101.TXT
Date Analyzed: 03/01/07
Run ID: GN24390
Methods: EPA 314
Units: ug/l

Sample Number	Parameter	Result	RL	IDL/MDL	True Value	% Recov.	QC Limits
GN24390-CCV1	Perchlorate	48.0	10	4.0	50	96.0	85-115
GN24390-CCB1	Perchlorate	4.0 U	10	4.0			
GN24390-CRI1	Perchlorate	4.0 U	10	4.0	3	100.0	75-125
GN24390-IPC1	Perchlorate	22.0	10	4.0	25	88.0	80-120
GN24390-CCV2	Perchlorate	51.3	10	4.0	50	103.0	85-115
GN24390-CCB2	Perchlorate	4.0 U	10	4.0			
GN24390-CCV3	Perchlorate	53.1	10	4.0	50	106.0	85-115
GN24390-CCB3	Perchlorate	4.0 U	10	4.0			
GN24390-CCV4	Perchlorate	51.6	10	4.0	50	103.0	85-115
GN24390-CCB4	Perchlorate	4.0 U	10	4.0			

(!) Outside of QC limits

SHAW ENVIRONMENTAL, INC.
ANALYTICAL DATA EVALUATION

The Project Chemist reviewed the attached Data Package. Detailed comments concerning specific analyses (i.e. GC/MS Semivolatiles) are provided in the attached review sheets. Any additional comments concerning the data package as a whole are listed below

Site/Location: Longhorn
Project No.: 117591
Laboratory: accutest
Report No.: T16411

COMMENTS:
MNA sampling

DATA COMPLETENESS				
	REQUIREMENTS: Cooler receipt	**Y**	**N**	**NA**
	Cooler receipt form present?	✓		
	Documentation of broken bottles, bubbles in VOA vials, missing labels, seals, etc.?	✓		
	Was the cooler temperature upon receipt at the laboratory between 2° and 6° C?	✓		
	Was the pH of the sample acceptable?	✓		
	Original chain of custody/analytical request form present and complete?	✓		
	Comparison of the reported parameters to the request on the chain of custody?	✓		
	Each sample number transcribed by the laboratory and correct sample date?	✓		
	Cross reference of field sample number, laboratory number and analytical batch?	✓		
	Date of preparation / extraction and analysis for each sample?	✓		
	Detection / Quantitation limits reported as specified?	✓		
	Results reported for method blanks?	✓		
	Results reported for trip blanks (VOCs only)?	✓		
	Matrix Spike (MS) /Matrix Spike Duplicates (MSD) % recoveries and RPDs reported?	✓		
	Laboratory Control Samples (LCS) / LCSD % recoveries and RPDs reported?	✓		
	Surrogate values provided (organic samples only)?	✓		

Data Reviewed by: Diane Meyer Date: 3/27/07
Diane Meyer, Project Chemist

ANALYSIS: VOLATILE MATRIX: LIQUID X
EPA METHOD: 8260B SOIL/SOLID_____ TCLP_____
BY GC/MS: LIQUID_____ Hold times met?_____

REQUIREMENTS		Y	N	NA
Method Blank	Every Batch or 20 Samples	✓		
	All Compounds < MDL	✓		
Trip Blank or Equipment Samples	Any contaminants detected?		✓	
Matrix Spike % Recovery Value	Within those set by Lab		✓	
Matrix Spike Dup % Recovery Value	Within those set by Lab		✓	
MS / MSD RPD	< Lab QC Limits	✓		
% LCS Recovery Value	Within those set by Lab	✓		
% LCSD Recovery Value	Within those set by Lab			✓
LCS /LCSD RPD	< Lab QC Limits			✓
% Surrogate Recovery Limits	Within those set by Lab	✓		
Field Duplicate Evaluation	RPD <35% or difference < 2 SQL for water	✓		✓ DW
	RPD <50% of difference < 3.5 SQL for soil	✓		✓

① 17WW01 & FD
B2 - ok
1,1-Dichlorethene - ok
1,2-dichlorethane - ok
1,1,2-Trichlorethane - ok
If "NO," list all samples below:
cis 1,2-DCE - ok
TCE - ok
Blank Information 1,1-dichlorethene - OK trans - ok

Blank Type	Blank ID	Prep Batch	Date	Contaminant Found	Concentration (Specify Units)	Associated Samples

Matrix Spike / Matrix Spike Duplicate Results and Field Duplicate

Sample Type	Sample ID	Analyte	MS Recovery	MSD Recovery	Result - 1	Result - 2	RPD%
water	T16411-10	Styrene	7	8	65-120	— only	MS SX
was qualified	UJL code	08A as	NFG does	not qualify	only	on MS	record

Any runs with one (1) or more recoveries outside limits?

Run Date	Surrogate Compound	Analyte	Original % Recovery	Re-Run Recovery	Comments

Laboratory Control Sample

Sample Type	Sample ID	Compound	LCS %	LCSD %	RPD%

② 47WW14 FD
multiple analytes - ok
vinyl chloride 28.1 vs 20.5 RPD = 31.3% - ok

TIER 2 DATA REVIEW –VOLATILE ANALYSIS

ANALYSIS: VOLATILE ANALYSIS
EPA METHOD: 8260B
BY: GC/MS

MATRIX: LIQUID X
SOLID/SOIL_____ TCLP_____

REQUIREMENT		Y	N	NA
Tune Calibration Check	BFB Every 12 Hours	✓		
Initial Calibration Check	% RSD <OR = 30%	✓		
Continuing Calibration Check	% DIFF <OR = 25%		✓	
SPCC Compounds **(Chlorobenzene/1, 1, 2, 2-TCA)**	**RF** = OR > 0.30	✓		
Bromoform, 1, 1-Dichlorooethane, Chloromethane	**RF** = OR > 0.10	✓		
Any CCAL Mean	RF = OR > 0.05	✓		
All sample/blank internal standard areas	Within those set by Lab		✓	
All sample/blank internal standard retention times	Within 30 sec. of Standard IS RT	✓		

If "NO," List all samples below

Tune Calibration

BFB Run		GC/MS ID	Prep Batch	Associated Samples
Date	Time			

Initial Calibration

Calibration		GC/MS ID	Matrix	Mean RRF	% RSD	Compound	Associated Samples
Date	Time						

Continuing Calibration

Calibration		GC/MS ID	Matrix	Mean RRF	% RSD	Compound	Associated Samples
Date	Time						
3/3/07	0918am	F	water		35%	acetone - 5x	T16411-7,9,11
	Qualifiers		U code 05B				

Internal Standard Performance

Sample Number	Internal Standard Area/RT	Limits	Comments
T16411-7,9	1,4-dichlorobenzene-d4		
Qualifiers J (UJ): 1,1,2,2-tetrachloroethane only code 10A			

TIER 1 DATA REVIEW – ORGANIC ANALYSIS

ANALYSIS: Dissolved Gases MATRIX: LIQUID X

EPA METHOD: RSK 175 SOLID/SOIL _____ TCLP _____

BY: GC OR HPLC HOLD TIMES MET?

REQUIREMENTS		Y	N	NA
Method Blank	Every Batch or 20 Samples	✓		
	All Compounds <MDL	✓		
Matrix Spike % Recovery Values	Within those set by Lab	✓		
Matrix Spike Dup % Recovery Values	Within those set by Lab			✓
MS/MSD RPD	<Lab QC Limits			✓
% LCS Recovery Value	Within those set by Lab	✓		
% LCSD Recovery Values	Within those set by Lab			✓
~~LCS/LCSD~~ sample dup RPD	<Lab QC Limits	✓		
% Surrogate Recovery Limits	Within those set by Lab			✓
(1) 17WW01 + FD Field Duplicate Evaluation	RPD < 35% or difference < 2 SQL for water	✓		
methane 9.73 vs 10.1 - ok	RPD < 50% or difference < 3.5 SQL for soil			✓

(2) 47WW14 + FD
methane 44.8 vs 42.7 - ok

If "NO," List all samples below:

Blank Information

Run		Date Extracted	Blank ID	Compound	Conc. Units	Associated Samples
Date	Time					

Matrix Spike / Matrix Spike Duplicate Results and Field Duplicate

Sample Type	Sample ID	Analyte	MS Recovery	MSD Recovery	Result - 1	Result - 2	RPD %

Any runs with one (1) or more recoveries outside limits for each fraction?

Run Date	Surrogate Compound	Analyte	Original % Recovery	Re-Run Recovery	Comments

Laboratory Control Sample

Sample Type	Sample ID	Compound	LCS %	LCSD %	Comments

NO Quals

TIER 2 DATA REVIEW – ORGANIC ANALYSIS

ANALYSIS: Dissolved Gases MATRIX: LIQUID X

EPA METHOD: RSK175 SOLID/SOIL_____ TCLP_____

BY: GC OR HPLC

REQUIREMENT		Y	N	NA
Initial Calibration	% RSD <OR = 30% or r^2 > 0.990	✓		
Continuing Calibration	% DIFF <OR = ~~15%~~ 30%	✓		
All sample/blank internal standard (IS) retention times	Within those set by lab			✓
All sample/blank IS retention times	Within 30 sec. of Standard IS			✓

If "NO," list all samples below

Initial Calibration

Calibration		Instrument ID	Matrix	Correlation Coefficient	% RSD	Compound	Associated Samples
Date	Time						

Continuing Calibration

Calibration		Instrument ID	Matrix	% Diff.	Compound	Associated Samples
Date	Time					

Internal Standard Performance

Sample Number	Compound	Internal Standard Area/RT	Limits

00077935

TIER 1 DATA REVIEW – CONVENTIONAL ANALYSIS

ANALYSIS: alkalinity
METHOD: chloride
BY: nitrate/nitrite · sulfate sulfide TOC
MATRIX: LIQUID X
SOLID/SOIL____

hold times OK

REQUIREMENTS		Y	N	NA
Method Blank	Every Batch or 20 Samples	✓		
	All Compounds <MDL	✓		
Matrix Spike Recovery Values	75-125%	✓		
Matrix Spike Duplicate Recovery Values	75-125%			✓
LCS Recovery Values	80-120%	✓		
LCSD Recovery Values	80-120%			✓
~~sample dup~~ ~~LCS / LCSD~~ RPD	<20%	✓		
PRECISION (QC Sample Field Sample or Field Sample/QC Sample)	RPD < 35% or difference < 2 SQL for water	✓		
	RPD < 50% or difference < 3.5 SQL for soil			✓

① 17WW01 & FD
Sulfate ~~327~~ 89 vs 107 RPD = 18%

If "NO," List all samples below:

Blank Type	Run Date	Run Time	Date Prepped	Blank ID	Compound	Concentration (units)	Associated Samples

Matrix Spike / Matrix Spike Duplicate Results and Field Duplicate

Sample Type	Sample ID	Analyte	MS Recovery	MSD Recovery	Result -1	Result - 2	RPD%

Laboratory Control Sample Analysis

File Name	Analysis Type / Element	Instrument ID	Recovery %

② 47WW14 & FD
ok

No Quals

TIER 1 DATA REVIEW – ORGANIC ANALYSIS

ANALYSIS: Explosives
EPA METHOD: 8330
BY: GC OR HPLC

MATRIX: LIQUID X
SOLID/SOIL _____ TCLP _____
HOLD TIMES MET? yes

REQUIREMENTS		Y	N	NA
Method Blank	Every Batch or 20 Samples	✓		
	All Compounds <MDL	✓		
Matrix Spike % Recovery Values	Within those set by Lab	✓		
Matrix Spike Dup % Recovery Values	Within those set by Lab		✓	
MS/MSD RPD	<Lab QC Limits	✓		
% LCS Recovery Value	Within those set by Lab	✓		
% LCSD Recovery Values	Within those set by Lab			✓
LCS/LCSD RPD	<Lab QC Limits			✓
% Surrogate Recovery Limits	Within those set by Lab	✓		
Field Duplicate Evaluation 17 WW01 + FD – only ND vs ND	RPD < 35% or difference < 2 SQL for water	✓		
	RPD < 50% or difference < 3.5 SQL for soil	~~✓~~	~~✓~~	✓

If "NO," List all samples below:

Blank Information

Run Date	Run Time	Date Extracted	Blank ID	Compound	Conc. Units	Associated Samples

Matrix Spike / Matrix Spike Duplicate Results and Field Duplicate

Sample Type	Sample ID	Analyte	MS Recovery	MSD Recovery	Result - 1	Result - 2	RPD %
water		RDX	112	129	80-124	5x ND-	no affect

Any runs with one (1) or more recoveries outside limits for each fraction?

Run Date	Surrogate Compound	Analyte	Original % Recovery	Re-Run Recovery	Comments

Laboratory Control Sample

Sample Type	Sample ID	Compound	LCS %	LCSD %	Comments

NO Quals

TIER 2 DATA REVIEW – ORGANIC ANALYSIS

ANALYSIS: Explosives
EPA METHOD: 8330
BY: GC OR HPLC

MATRIX: LIQUID X
SOLID/SOIL_____ TCLP_____

REQUIREMENT		Y	N	NA
Initial Calibration	% RSD <OR = 30% or r^2 > 0.990	✓		
Continuing Calibration	% DIFF <OR = 15%		✓	
All sample/blank internal standard (IS) retention times	Within those set by lab			✓
All sample/blank IS retention times	Within 30 sec. of Standard IS			✓

If "NO," list all samples below

Initial Calibration

Calibration		Instrument ID	Matrix	Correlation Coefficient	% RSD	Compound	Associated Samples
Date	Time						

Continuing Calibration

Calibration		Instrument ID	Matrix	% Diff.	Compound	Associated Samples
Date	Time					
2/27/07	15:07	G1315B	water	-72.2	HMX	- MS/MSD only
↓	20:10	↓	↓	-72.6	HMX	- no samples associated

Internal Standard Performance

Sample Number	Compound	Internal Standard Area/RT	Limits

00077938

TIER 1 DATA REVIEW – CONVENTIONAL ANALYSIS

ANALYSIS: perchlorate
METHOD: 314.0
BY: _____

MATRIX: LIQUID X
SOLID/SOIL _____

REQUIREMENTS		Y	N	NA
Method Blank	Every Batch or 20 Samples	✓		
	All Compounds <MDL	✓		
Matrix Spike Recovery Values	75-125%	✓		
Matrix Spike Duplicate Recovery Values	75-125%			✓
LCS Recovery Values	80-120%	✓		
LCSD Recovery Values	80-120%			✓
~~LCS / LCSD~~ sample dup RPD	<20%	✓		
PRECISION (QC Sample Field Sample or Field Sample/QC Sample)	RPD < 35% or difference < 2 SQL for water	✓		
	RPD < 50% or difference < 3.5 SQL for soil			✓

① 17WW01 & FD <4 vs <4 -or ② 47WW14 & FD

If "NO," List all samples below: <4U vs <4U

Blank Type	Run Date	Run Time	Date Prepped	Blank ID	Compound	Concentration (units)	Associated Samples

Matrix Spike / Matrix Spike Duplicate Results and Field Duplicate

Sample Type	Sample ID	Analyte	MS Recovery	MSD Recovery	Result -1	Result - 2	RPD%

Laboratory Control Sample Analysis

File Name	Analysis Type / Element	Instrument ID	Recovery %

no Quals

T1641 ✓

Team 3-02B

Shaw® Shaw Environmental, Inc.

3010 Briarpark Drive, Suite 4N
Houston, TX 77042 (713) 996-4400

CHAIN-OF-CUSTODY

No. 10931

Laboratory Name: AccutesT Address: 10165 Harwin #150 Hou, TX 77036 Contact: Agnes (713) 271-4700

Project Name: LHAAP Project Location: Karnack, TX

Project No.: 117591 Project Contact: K. Everette Project Telephone No.: (713) 996 4421

Point of contact: D. Meyers Telephone No.: (713) 996-4408 Project Manager/Supervisor: P. Srivastav

Analysis and Method Desired (Indicate separate containers)

Item No.	Sample Number	Date	Time	Comp	Grab	Matrix	Sample Description, Location	Number of Containers	VOC 8260	Anion 300	Sulfides 376.2	Perchlorate 314	Cases 175	Alkalinity 310.1	TOC 415.1	Explosives 8330	Remarks
1	LHSMW22-Feb2007	2/20/07	8:50		X	W	Groundwater	13	✓	✓	✓	✓	✓	✓	✓		
2	17WW01-Feb2007	2/20/07	15:10		X	W	Groundwater	14	✓	✓	✓	✓	✓	✓	✓	✓	
3	17WW01-Feb 2007-FD	2/20/07	15:10		X	W	Groundwater	14	✓	✓	✓	✓	✓	✓	✓	✓	
4																	
5																	
6																	
7																	
8																	
9																	
10																	

Transfers Relinquished By (Signature)	Date/Time	Transfers Accepted By (Signature)	Date/Time
Susan Allen	02/20/07	Scott Belzijer	2-21-07 08:10
Scott Belzijer	2-21-07 08:30		
		Laboratory A. Rodriguez	2/22/07 9:56

Special Instructions: Do Sample for Alkalinity in 17WW01-Feb 2007. CO_2 for all gases.

FedEx Airbill No.: 1246V7250192598203

Samplers Signature: Susan Allen

TAT: X Standard ____ Rush Due: ____ Seals Intact? X Y ____ N Received Good Condition X Y ____ N ✓ Cold

White - Lab Copy Canary - Field Copy Pink - File Copy

T11411

Shaw® Shaw Environmental, Inc.

3010 Briarpark Drive, Suite 4N
Houston, TX 77042 (713) 996-4400

CHAIN-OF-CUSTODY

No. 10949

Laboratory Name: Accutest
Address: 10165 Harwin Dr. #150 Houston, TX 77036
Contact: Agnes 713-271-4700

Project Name: Longhorn Army Ammunition Plant
Project Location: Karnack, TX

Project No.: 117591
Project Contact: Kay Everette
Project Telephone No.: 713-996-4421

Point of contact: Diane Meyer
Telephone No. 713-996-4408
Project Manager/Supervisor: Praveen Srivastav

Analysis and Method Desired (Indicate separate containers)

Item No.	Sample Number	Date	Time	Comp	Grab	Matrix	Sample Description, Location	Number of Containers	VOC - 8260B	Anions 300.0	376.2 Sulfides	314.0 Perchlorate	Gases CO2 - RSK SOP 175	310.1 Alkalinity	TOC 415.1	Remarks
4	LHSMW19-Feb2007	2/20/07	0950		✓	GW	GW-Site 46	3	✓							
4 ~~5~~ 2	LHSMW19-Feb2007	2/20/07	0950		✓	GW	GW-Site 46	3					✓			
4 ~~6~~ 3	LHSMW19-Feb2007	2/20/07	0950		✓	GW	GW-Site 46	3							✓	
4 4	LHSMW19-Feb2007	2/20/07	0950		✓	GW	GW-Site 46	1				✓				
4 5	LHSMW19-Feb2007	2/20/07	0950		✓	GW	GW-Site 46	1			✓					
4 6	LHSMW19-Feb2007	2/20/07	0950		✓	GW	GW-Site 46	1		✓						
4 7	LHSMW19-Feb2007	2/20/07	0951		✓	GW	GW-Site 46	1						✓		
8																
9																
10																

Transfers Relinquished By (Signature)	Date/Time	Transfers Accepted By (Signature)	Date/Time
Sherry McAdoo	2-20-07 1630	Scott Beesinger	2/21/07 08:10
Scott Beesinger	2-21-07 08:30		
		Laboratory: A. Rodriguez	2/22/07 9:58

Special Instructions: UPS

FedEx Airbill No.: 1Z6V7850192598203

Sampler's Signature: Sherry McAdoo

TAT: ____ Standard ____ Rush Due: ____ Seals Intact? ✓ Y ____ N Received Good Condition ✓ Y ____ N ✓ Cold

White - Lab Copy Canary - Field Copy Pink - File Copy

000170040

T16411

Shaw® Shaw Environmental, Inc.

3010 Briarpark Drive, Suite 4N
Houston, TX 77042 (713) 996-4400

CHAIN-OF-CUSTODY

No. 10914

Laboratory Name: Accutest
Address: 10165 Harwin Dr #150 Houston, TX 77036
Contact: Agnes - 713-271-4700

Project Name: Longhorn Army Ammunition Plant
Project Location: Karnack, TX
Project No.: 117591
Project Contact: Kay Everette
Project Telephone No.: 713-996-4421
Point of contact: Diane Meyer
Telephone No.: 713-996-4408
Project Manager/Supervisor: Praveen Srivastav

Analysis and Method Desired (Indicate separate containers)

Item No.	Sample Number	Date	Time	Comp	Grab	Matrix	Sample Description, Location	Number of Containers	VOC's by 8260	Anions 300	Sulfides 376.2	Cyanides 335	Alkalinity 310.1	TOC 415.1	Perchlorate 314.0	Remarks
5	46WW02-FEB 2007	2/20/07	0934		X	W	46WW02	13	X	X	X	X	X	X	X	
6	47WW14-FEB 2007	2/20/07	1223		X	W	47WW14	13	X	X	X	X	X	X	X	
7	47WW14FEB2007-FD	2/20/07	1223		X	W	47WW14-FD	13	X	X	X	X	X	X	X	
8	47WW13 FEB 2007	2/20/07	1554		X	W	47WW13	13	X	X	X	X	X	X	X	
9																
10																

2/20/07 JRB

Transfers Relinquished By (Signature)	Date/Time	Transfers Accepted By (Signature)	Date/Time
J Rhs	2/20/07 @ 1800	Scott Beesinger	2-21-07 08:10
Scott Beesinger	2-21-07 08:30		
		Laboratory: A. Rodriguez	2/22/07 9:58

Special Instructions: LLB

FedEx Airbill No.: 1Z66V7250192598203

Sampler's Signature:

TAT: X Standard ___ Rush Due: ___ Seals Intact? ✓ Y ___ N Received Good Condition ✓ Y ___ N ✓ Cold

White - Lab Copy Canary - Field Copy Pink - File Copy

00077041

T16411

Shaw® Shaw Environmental, Inc.

3010 Briarpark Drive, Suite 4N
Houston, TX 77042 (713) 996-4400

CHAIN-OF-CUSTODY

No. 10948

Laboratory Name: Accutest
Address: 10165 Harwin Dr. #150, Houston, TX 77036
Contact: Agnes 713-271-4700

Project Name: Longhorn Army Ammunition Plant
Project Location: Karnack, TX
Project No.: 117591
Project Contact: Kay Everette
Project Telephone No.: 713-996-4421
Point of contact: Diane Meyer
Telephone No.: 713-996-4408
Project Manager/Supervisor: Praveen Srivastav

Analysis and Method Desired (Indicate separate containers)

Item No.	Sample Number	Date	Time	Comp	Grab	Matrix	Sample Description, Location	Number of Containers	VOC-8260B	Anions 300.0	376.2 Sulfides	314.0 Perchlorate	Gases (RSK SOP 175) CO2	310.1 Alkalinity	TOC 415.1	Remarks
1	LHSMW04-Feb2007	2/20 07	1530		✓	W	GW, Site 35A	3	✓							
2	LHSMW04-Feb2007	2/20 07	1530		✓	W	GW, Site 35A	3					✓			
3	LHSMW04-Feb2007	2/20 07	1530		✓	W	GW, Site 35A	3							✓	
4	LHSMW04-Feb2007	2/20 07	1530		✓	W	GW, Site 35A	1		✓						
5	LHSMW04-Feb2007	2/20 07	1530		✓	W	GW, Site 35A	1			✓					
6	LHSMW04-Feb2007	2/20 07	1530		✓	W	GW, Site 35A	1						✓		
7	LHSMW04-Feb2007	2/20 07	1530		✓	W	GW, Site 35A	1				✓				
8																
9																
10																

Transfers Relinquished By (Signature)	Date/Time	Transfers Accepted By (Signature)	Date/Time
Sherry McAdoo	2-20-07 1630	Scott Bassin	2-21-07 08:10
Scott Bassin	2-21-07 08:30		
		Laboratory A. Rodriguez	2/22/07 9:50

Special Instructions: UPS

FedEx Airbill No.: 1Z 61V 725 01 9759 8203

Sampler's Signature: Sherry McAdoo

TAT: ____ Standard ____ Rush Due: ____ Seals Intact? ✓ Y ____ N Received Good Condition ✓ Y ____ N ✓ Cold

White - Lab Copy Canary - Field Copy Pink - File Copy

000773942

T16411

Shaw® Shaw Environmental, Inc.

3010 Briarpark Drive, Suite 4N
Houston, TX 77042 (713) 996-4400

CHAIN-OF-CUSTODY

No. 10952

Laboratory Name: Accutest
Address: 10165 Harwin Dr. #150, Houston, TX 77036
Contact: Agnes 713-271-4700

Project Name: Longhorn Army Ammunition Plant
Project Location: Karnack, TX

Project No.: 117591
Project Contact: Kay Everette
Project Telephone No.: 713-996-4421

Point of contact: Diane Meyer
Telephone No.: 713-996-4408
Project Manager/Supervisor: Praveen Srivastav

Analysis and Method Desired (Indicate separate containers)

Item No.	Sample Number	Date	Time	Comp	Grab	Matrix	Sample Description, Location	Number of Containers	Anions: 300.0	37C.2 Sulfides	314.0 Perchlorate	Gases/RSK 02 (SOP 175)	310.1 Alkalinity	TOC 415.1	VOC-8260B	Remarks
10 1	LHSMW18-Feb2007	2/20/07			✓	W	GW-Site 46 SM	6							✓	ms/msD
2	LHSMW18-Feb2007	2/20/07			✓	W	GW Site 46 SM	5				✓				ms/msD
3	LHSMW18-Feb2007	2/20/07			✓	W	GW Site 46 SM	4						✓		ms/msD
4	LHSMW18-Feb2007	2/20/07			✓	W	GW Site 46	3	✓							ms/msD
5	LHSMW18-Feb2007	2/20			✓	W	GW Site 46	3		✓						ms/msD
6	LHSMW18-Feb2007	2/20			✓	W	GW Site 46	3			✓					ms/msD
7	LHSMW18-Feb2007	2/20			✓	W	GW Site 46	3					✓			ms/msD
	QC															
11 9	t.b. - QC-2-22-07															
12 10	⊥ ⊥															

Transfers Relinquished By (Signature)	Date/Time	Transfers Accepted By (Signature)	Date/Time
Sherry McPadoo	2-20-07 1630	Scott Beesinger	2-21-07 08:10
Scott Beesinger	2-21-07 08:30		
		Laboratory A. Rodriguez	2/21/07 9:50

Special Instructions: If ~~need be~~, please lab needs more sample volume for a parameter ~~from~~ VOAs Please take from a voa labeled for an different parameter!

FedEx/UPS Airbill No.: 1Z166V7250192598203

Sampler's Signature: Sherry McPadoo

TAT: ____ Standard ____ Rush Due: ____ Seals Intact? ✓ Y ____ N Received Good Condition ✓ Y ____ N ✓ Cold

White - Lab Copy Canary - Field Copy Pink - File Copy

000079040

ACCUTEST

VARIANCE MEMO
SAMPLE LOG-IN

SAMPLE(S) various DATE 2/22/07
PROJECT LHAAP
FILED BY AR LAB NO. T16411

VARIANCE - Check applicable items(s):

- ____ Insufficient sample sent for proper analysis; received approx. ____
- ____ Sample bottle received broken and/or cap not intact.
- ____ Samples received without paperwork; paperwork received without samples.
- ____ Samples received without proper refrigeration, when it has been deemed necessary. Temperature at receipt: ____
- ____ Illegible sample number or label missing from bottle.
- ____ Numbers on sample not the same as numbers on paper work.
- ____ Incomplete instructions received with sample(s) ie.,no request for analysis, no chain of custody, incomplete billing instructions, no due date, etc. Temperature at reciept: ____
- ____ Samples received in improper container or lacking proper preservation.
- ____ Physical characteristics different than those on sampling sheets; Describe: ____
- ____ Rush samples on hold because of incomplete paperwork.
- ____ Other (specify) Sample numbers 1,4,and 5 were all received exceeding hold times.

CORRECTIVE ACTION TAKEN

Diane M. Person Contacted

- ____ Client informed verbally.
- ✓ Client informed by ~~memo/letter~~. email
- ____ Samples processed as is.
- ____ Samples preserved by lab.
- ____ Client will resample and resubmit.
- ✓ By phone.
- ____ Samples processed for information only and noted on report.
- ____ Samples processed with higher detection limits accepted.
- ____ Samples rejected.

Notes: Proceed w/ Analysis

ROUTING

TITLE	DATE	INITIALS	CORRECTED?
Sample Manager:			
Login:			
Project Manager:	2/22/07	AS	

Comments:

Form: SM006

ACCUTEST.

SAMPLE RECEIPT LOG

JOB #: T11411 DATE/TIME RECEIVED: 2/22/07/09:58

CLIENT: Shaw INITIALS: AR

Condition/Variance (Circle "Y" for yes and "N" for no or NA. If "N" is circled, see variance for explanation):

1. Y N Sample received in undamaged condition.
2. Y N Samples received within temp. range.
3. Y N Sample received with proper pH.
4. Y N Sample received in proper containers.
5. Y N Sample volume sufficient for analysis.
6. Y N Sample received with chain of custody.
7. Y N Chain of Custody matches **sample IDs and analysis** on containers.
8. Y N Samples Headspace acceptable
9. Y N NA Custody seal received intact and tamper not evident on cooler.
10. Y N NA Custody seal received intact and tamper not evident on bottles.

SAMPLE or FIELD ID	BOTTLE #	DATE SAMPLED	MATRIX	VOLUME	LOCATION	PRESERV.	PH
1-9	1-6	2/20	AQ	40 ml.	VREF	1,2,3,4,5,6	U, <2, >12, NA
	7-9			↓	2H	1,2,3,4,5,6	U, <2, >12, NA
	10			P1000		1,2,3,4,5,6	U, <2, >12, NA
	11			P500		1,2,3,4,5,6	U, <2, >12, NA
	12-13			↓	↓	1,2,3,4,5,6	U, <2, >12, NA
2,3	14			A1000	SUB	1,2,3,4,5,6	U, <2, >12, NA
10	1-18			40ml	VREF	1,2,3,4,5,6	U, <2, >12, NA
	19-27			↓	2H	1,2,3,4,5,6	U, <2, >12, NA
	28-30			P1000		1,2,3,4,5,6	U, <2, >12, NA
	31-33			P500		1,2,3,4,5,6	U, <2, >12, NA
	34-39	↓		↓	↓	1,2,3,4,5,6	U, <2, >12, NA
(+b) 11, 12	1-2	N/A	↓	40ml.	VREF	1,2,3,4,5,6	U, <2, >12, NA
		AR 2-22-07				1,2,3,4,5,6	U, <2, >12, NA
						1,2,3,4,5,6	U, <2, >12, NA
						1,2,3,4,5,6	U, <2, >12, NA
						1,2,3,4,5,6	U, <2, >12, NA

LOCATION: WI: Walk-In VR: Volatile Refrig. SUB: Subcontract EF: Encore Freezer

PRESERVATIVES: 1: None 2: HCL 3: HNO3 4: H2SO4 5: NAOH 6: Other

Comments:

pH of waters checked excluding volatiles

pH of soils N/A

Delivery method: Courier: UPS

COOLER TEMP: 2.2 COOLER TEMP: 2.1

COOLER TEMP: 3.6 COOLER TEMP: 5.8

Form: SM012, Rev.07/28/06, QAO

Chain of Custody

NO. 10225

Shaw® Shaw Environmental & Infrastructure, Inc.
3010 Briarpark Drive, Suite 400
Houston, TX 77042
(713) 996-4400

LOTO 9261

Laboratory Name: Kemron
Address: ~~156~~ 156 Starlite Marrietta, Ohio
Contact: Stephanie Mosburgh

Project Name: LONGHORN - PBC
Project Location: LHAAP-46

Project No.: 117591.
Project Contact: ALLEN WILLMORE
Project Telephone No.: (713) 247-9292

Point of Contact: LARRY DUTY
Telephone No.: (713) 996-4547
Project Manager/Supervisor: Praveen Srivastav

Analysis and Method Desired (Indicate separate containers)

Item No.	~~Telephone Number~~ Sample ID	Date	Time	Comp	Grab	Matrix	Sample Description, Location	Number of Containers	TAL metals (HNO3 unfiltered)	TAL metals (to be filtered)	Total Dissolved Solids	Total Suspended Solids				Remarks
1	46WW02-090707	9/7/07	8:30		✓	W	Groundwater, Site 46	4	1	1	1	1				
2	46WW04-090707	9/7/07	10:10		✓	W	Groundwater, Site 46	4	1	1	1	1				
3	LHSMW11-090707	9/7/07	12:20		✓	W	Groundwater, Site 46	4	1	1	1	1				
4	LHSMW14-091007	9/10/07	13:30		✓	W	Groundwater, Site 46	4	1	1	1	1				
5	LHSMW15-091007	9/10/07	1545		✓	W	Groundwater, Site 46	4	1	1	1	1				
6	LHSMW19-091107	9/11/07	0820		✓	W	Groundwater, Site 46	4	1	1	1	1				
7	LHSMW22-091107	9/11/07	09:50		✓	W	Groundwater, Site 46	4	1	1	1	1				Time Sampled = 09:50
8	LHSMW23-091107	9/11/07	~~09:50~~ 13:35		✓	W	Groundwater, Site 46	4	1	1	1	1				Time Sampled = 13:35
9	LHSMW24-091107-FD	9/11/07	15:35		✓	W	Groundwater, Site 46	4	1	1	1	1				Time Sampled = 15:35
10	LHSSMW24-091107	9/11/07	15:35		✓	W	Groundwater, Site 46	4	1	1	1	1				

Transfers Relinquished By (signature)	Date/Time	Transfers Accepted By (signature)	Date/Time
Scott Beesinger	9/7/07 16:00	M. [illegible]	9/7/07 16:00
M. [illegible]	9/12/07 1030		
		Laboratory Ewa Ekler	9-13-07 1100

Special Instructions

FedEx Airbill No.:

Sampler's Signature: M. [illegible]

TAT: ____ Standard ____ Rush Date ____ Seals Intact? ____ Y ____ N Received Good Condition ____ Y ____ N ____ Cold

White - Lab Copy Canary - Field Copy Pink - File Copy

Form Number: 433_1
Rev. 03-19-07

00077946

Shaw® Shaw Environmental, Inc.

3010 Briarpark Drive, Suite 4N
Houston, TX 77042 (713) 996-4400

10709261

CHAIN-OF-CUSTODY

No. 10749

Laboratory Name: Kemron
Address: 156 Starlite Marrietta, Ohio
Contact: Stephanie Mossburg

Project Name: Longhorn-PBC
Project Location: LHAAP-46
Analysis and Method Desired (Indicate separate containers)
Remarks

Project No.: 117591.009C400
Project Contact: Allen Wilcmore
Project Telephone No.: (713) 247-9292

Point of contact: Larry Doty
Telephone No. (713) 996-4547
Project Manager/Supervisor: Praveen Srivastav

Item No.	Sample Number	Date	Time	Comp	Grab	Matrix	Sample Description, Location	Number of Containers	LEAD							Remarks
1	PRSB01 (9-10)	9/5/07	10:35		✓	S	Soil, Pistol Range	1	X							
2	PRSB01 (14-15)	9/5/07	10:50		✓	S	Soil, Pistol Range	1	X							
3	PRSB01 (19-20)	9/5/07	11:15		✓	S	Soil, Pistol Range	1	X							
4																
5																
6																
7																
8																
9																
10																

Transfers Relinquished By (Signature)	Date/Time	Transfers Accepted By (Signature)	Date/Time
M. [illegible]	9/12/07 / 1030		
		Laboratory Erin Elder	9-13-07 1100

Special Instructions

FedEx Airbill No.:

Sampler's Signature: [illegible]

TAT: ____ Standard ____ Rush Due: ___ Seals Intact? ____ Y ____ N Received Good Condition ____ Y ____ N ____ Cold

White - Lab Copy Canary - Field Copy Pink - File Copy

0007947

KEMRON ENVIRONMENTAL SERVICES

Report Number: L0709261
Report Date : September 26, 2007

Sample Number: L0709261-01
Client ID: 46WW02-090707
Matrix: Water
Workgroup Number: WG250152
Collect Date: 09/07/2007 08:30
Sample Tag: 01

PrePrep Method: NONE
Prep Method: 3005A
Analytical Method: 6010B
Analyst: KHR
Dilution: 1
Units: mg/L

Instrument: PE-ICP2
Prep Date: 09/14/2007 06:55
Cal Date: 09/14/2007 09:22
Run Date: 09/14/2007 15:51
File ID: P2.091407.155157

Analyte	CAS. Number	Result	Qual	PQL	SQL	
Aluminum, Total	7429-90-5	0.233		0.100	0.0500	
Beryllium, Total	7440-41-7		U	0.00200	0.000500	
Calcium, Total	7440-70-2	20.3		0.200	0.100	
Cobalt, Total	7440-48-4	0.0165		0.00500	0.00250	
Iron, Total	7439-89-6	1.65		0.100	0.0250	
Potassium, Total	7440-09-7	2.33		1.00	0.250	J,13
Magnesium, Total	7439-95-4	17.0		0.500	0.250	
Sodium, Total	7440-23-5	46.8		0.500	0.250	J,13
Vanadium, Total	7440-62-2		U	0.0100	0.00500	
Zinc, Total	7440-66-6	0.0879		0.0200	0.00500	J,13

U Not detected at or above adjusted sample detection limit

KEMRON ENVIRONMENTAL SERVICES

Report Number: L0709261
Report Date : September 26, 2007

Sample Number: L0709261-02
Client ID: 46WW02-090707
Matrix: Water
Workgroup Number: WG250289
Collect Date: 09/07/2007 08:30
Sample Tag: 01

PrePrep Method: NONE
Prep Method: 3005A
Analytical Method: 6010B
Analyst: KHR
Dilution: 1
Units: mg/L

Instrument: PE-ICP2
Prep Date: 09/17/2007 06:25
Cal Date: 09/18/2007 08:50
Run Date: 09/18/2007 15:07
File ID: P2.091807.150720

Analyte	CAS. Number	Result	Qual	PQL	SQL	
Aluminum, Dissolved	7429-90-5		U	0.100	0.0500	
Beryllium, Dissolved	7440-41-7		U	0.00200	0.000500	
Calcium, Dissolved	7440-70-2	22.3		0.200	0.100	
Cobalt, Dissolved	7440-48-4	0.0152		0.00500	0.00250	
Iron, Dissolved	7439-89-6	0.749		0.100	0.0250	
Potassium, Dissolved	7440-09-7	2.57		1.00	0.250	J,13
Magnesium, Dissolved	7439-95-4	16.4		0.500	0.250	
Sodium, Dissolved	7440-23-5	57.7		0.500	0.250	J,13
Zinc, Dissolved	7440-66-6	0.0443		0.0200	0.00500	J,13

U Not detected at or above adjusted sample detection limit

KEMRON ENVIRONMENTAL SERVICES

Report Number: L0709261
Report Date : September 26, 2007

Sample Number: L0709261-02
Client ID: 46WW02-090707
Matrix: Water
Workgroup Number: WG250289
Collect Date: 09/07/2007 08:30
Sample Tag: DL01

PrePrep Method: NONE
Prep Method: 3005A
Analytical Method: 6010B
Analyst: KRV
Dilution: 5
Units: mg/L

Instrument: PE-ICP2
Prep Date: 09/17/2007 06:25
Cal Date: 09/19/2007 08:57
Run Date: 09/19/2007 13:41
File ID: P2.091907.134135

Analyte	CAS. Number	Result	Qual	PQL	SQL
Vanadium, Dissolved	7440-62-2		U	0.0500	0.0250

U Not detected at or above adjusted sample detection limit

KEMRON ENVIRONMENTAL SERVICES

Report Number: L0709261
Report Date : September 26, 2007

Sample Number: L0709261-03
Client ID: 46WW04-090707
Matrix: Water
Workgroup Number: WG250152
Collect Date: 09/07/2007 10:10
Sample Tag: 01

PrePrep Method: NONE
Prep Method: 3005A
Analytical Method: 6010B
Analyst: KHR
Dilution: 1
Units: mg/L

Instrument: PE-ICP2
Prep Date: 09/14/2007 06:55
Cal Date: 09/14/2007 09:22
Run Date: 09/14/2007 15:35
File ID: P2.091407.153531

Analyte	CAS. Number	Result	Qual	PQL	SQL	
Aluminum, Total	7429-90-5		U	0.100	0.0500	
Beryllium, Total	7440-41-7		U	0.00200	0.000500	
Calcium, Total	7440-70-2	328		0.200	0.100	
Cobalt, Total	7440-48-4	0.0499		0.00500	0.00250	
Iron, Total	7439-89-6	9.82		0.100	0.0250	
Potassium, Total	7440-09-7	3.04		1.00	0.250	J,13 ✓
Magnesium, Total	7439-95-4	165		0.500	0.250	
Vanadium, Total	7440-62-2		U	0.0100	0.00500	
Zinc, Total	7440-66-6	0.00652	J	0.0200	0.00500	J,15,13 ✓

U Not detected at or above adjusted sample detection limit
J The analyte was positively identified, but the quantitation was below the RL

KEMRON ENVIRONMENTAL SERVICES

Report Number: L0709261
Report Date : September 26, 2007

Sample Number: L0709261-03
Client ID: 46WW04-090707
Matrix: Water
Workgroup Number: WG250152
Collect Date: 09/07/2007 10:10
Sample Tag: DL01

PrePrep Method: NONE
Prep Method: 3005A
Analytical Method: 6010B
Analyst: KHR
Dilution: 20
Units: mg/L

Instrument: PE-ICP2
Prep Date: 09/14/2007 06:55
Cal Date: 09/17/2007 08:39
Run Date: 09/17/2007 12:43
File ID: P2.091707.124336

Analyte	CAS. Number	Result	Qual	PQL	SQL
Sodium, Total	7440-23-5	492		10.0	5.00

5,13

KEMRON ENVIRONMENTAL SERVICES

Report Number: L0709261
Report Date : September 26, 2007

Sample Number: L0709261-04
Client ID: 46WW04-090707
Matrix: Water
Workgroup Number: WG250289
Collect Date: 09/07/2007 10:10
Sample Tag: 01

PrePrep Method: NONE
Prep Method: 3005A
Analytical Method: 6010B
Analyst: KHR
Dilution: 1
Units: mg/L

Instrument: PE-ICP2
Prep Date: 09/17/2007 06:25
Cal Date: 09/18/2007 08:50
Run Date: 09/18/2007 14:35
File ID: P2.091807.143515

Analyte	CAS. Number	Result	Qual	PQL	SQL	
Aluminum, Dissolved	7429-90-5		U	0.100	0.0500	
Beryllium, Dissolved	7440-41-7		U	0.00200	0.000500	
Calcium, Dissolved	7440-70-2	357		0.200	0.100	
Cobalt, Dissolved	7440-48-4	0.0556		0.00500	0.00250	
Iron, Dissolved	7439-89-6	3.35		0.100	0.0250	
Potassium, Dissolved	7440-09-7	3.73		1.00	0.250	J, B ✓
Magnesium, Dissolved	7439-95-4	169		0.500	0.250	
Zinc, Dissolved	7440-66-6		U	0.0200	0.00500	UJ, B ✓

U Not detected at or above adjusted sample detection limit

KEMRON ENVIRONMENTAL SERVICES

Report Number: L0709261
Report Date : September 26, 2007

Sample Number: L0709261-04
Client ID: 46WW04-090707
Matrix: Water
Workgroup Number: WG250289
Collect Date: 09/07/2007 10:10
Sample Tag: DL01

PrePrep Method: NONE
Prep Method: 3005A
Analytical Method: 6010B
Analyst: KRV
Dilution: 20
Units: mg/L

Instrument: PE-ICP2
Prep Date: 09/17/2007 06:25
Cal Date: 09/19/2007 08:57
Run Date: 09/19/2007 13:09
File ID: P2.091907.130911

Analyte	CAS. Number	Result	Qual	PQL	SQL
Sodium, Dissolved	7440-23-5	433		10.0	5.00
Vanadium, Dissolved	7440-62-2		U	0.200	0.100

J,13 ✓

U Not detected at or above adjusted sample detection limit

KEMRON ENVIRONMENTAL SERVICES

Report Number: L0709261
Report Date : September 26, 2007

Sample Number: L0709261-05
Client ID: LHSMW11-090707
Matrix: Water
Workgroup Number: WG250152
Collect Date: 09/07/2007 12:20
Sample Tag: 01

PrePrep Method: NONE
Prep Method: 3005A
Analytical Method: 6010B
Analyst: KHR
Dilution: 1
Units: mg/L

Instrument: PE-ICP2
Prep Date: 09/14/2007 06:55
Cal Date: 09/14/2007 09:22
Run Date: 09/14/2007 15:58
File ID: P2.091407.155818

Analyte	CAS. Number	Result	Qual	PQL	SQL	
Aluminum, Total	7429-90-5	0.508		0.100	0.0500	
Beryllium, Total	7440-41-7		U	0.00200	0.000500	
Calcium, Total	7440-70-2	269		0.200	0.100	
Cobalt, Total	7440-48-4	0.0227		0.00500	0.00250	
Iron, Total	7439-89-6	7.88		0.100	0.0250	
Potassium, Total	7440-09-7	1.27		1.00	0.250	J,13 ✓
Magnesium, Total	7439-95-4	119		0.500	0.250	
Vanadium, Total	7440-62-2		U	0.0100	0.00500	
Zinc, Total	7440-66-6	0.00897	J	0.0200	0.00500	J,15,13 ✓

U Not detected at or above adjusted sample detection limit
J The analyte was positively identified, but the quantitation was below the RL

KEMRON ENVIRONMENTAL SERVICES

Report Number: L0709261
Report Date : September 26, 2007

Sample Number: L0709261-05
Client ID: LHSMW11-090707
Matrix: Water
Workgroup Number: WG250152
Collect Date: 09/07/2007 12:20
Sample Tag: DL01

PrePrep Method: NONE
Prep Method: 3005A
Analytical Method: 6010B
Analyst: KHR
Dilution: 20
Units: mg/L

Instrument: PE-ICP2
Prep Date: 09/14/2007 06:55
Cal Date: 09/17/2007 08:39
Run Date: 09/17/2007 13:02
File ID: P2.091707.130230

Analyte	CAS. Number	Result	Qual	PQL	SQL
Sodium, Total	7440-23-5	597		10.0	5.00

5,13 ✓

KEMRON ENVIRONMENTAL SERVICES

Report Number: L0709261
Report Date : September 26, 2007

Sample Number: L0709261-06
Client ID: LHSMW11-090707
Matrix: Water
Workgroup Number: WG250289
Collect Date: 09/07/2007 12:20
Sample Tag: 01

PrePrep Method: NONE
Prep Method: 3005A
Analytical Method: 6010B
Analyst: KHR
Dilution: 1
Units: mg/L

Instrument: PE-ICP2
Prep Date: 09/17/2007 06:25
Cal Date: 09/18/2007 08:50
Run Date: 09/18/2007 14:54
File ID: P2.091807.145435

Analyte	CAS. Number	Result	Qual	PQL	SQL	
Aluminum, Dissolved	7429-90-5		U	0.100	0.0500	
Beryllium, Dissolved	7440-41-7		U	0.00200	0.000500	
Calcium, Dissolved	7440-70-2	277		0.200	0.100	
Cobalt, Dissolved	7440-48-4	0.0205		0.00500	0.00250	
Iron, Dissolved	7439-89-6		U	0.100	0.0250	
Potassium, Dissolved	7440-09-7	1.56		1.00	0.250	J, 13 ✓
Magnesium, Dissolved	7439-95-4	113		0.500	0.250	
Zinc, Dissolved	7440-66-6		U	0.0200	0.00500	UJ, 13 ✓

U Not detected at or above adjusted sample detection limit

KEMRON ENVIRONMENTAL SERVICES

Report Number: L0709261
Report Date : September 26, 2007

Sample Number: L0709261-06
Client ID: LHSMW11-090707
Matrix: Water
Workgroup Number: WG250289
Collect Date: 09/07/2007 12:20
Sample Tag: DL01

PrePrep Method: NONE
Prep Method: 3005A
Analytical Method: 6010B
Analyst: KRV
Dilution: 20
Units: mg/L

Instrument: PE-ICP2
Prep Date: 09/17/2007 06:25
Cal Date: 09/19/2007 08:57
Run Date: 09/19/2007 13:28
File ID: P2.091907.132816

Analyte	CAS. Number	Result	Qual	PQL	SQL
Sodium, Dissolved	7440-23-5	655		10.0	5.00
Vanadium, Dissolved	7440-62-2		U	0.200	0.100

J, 13 ✓

U Not detected at or above adjusted sample detection limit

KEMRON ENVIRONMENTAL SERVICES

Report Number: L0709261
Report Date : September 26, 2007

Sample Number: L0709261-07
Client ID: LHSMW14-090707
Matrix: Water
Workgroup Number: WG250152
Collect Date: 09/10/2007 13:30
Sample Tag: 01

PrePrep Method: NONE
Prep Method: 3005A
Analytical Method: 6010B
Analyst: KHR
Dilution: 1
Units: mg/L

Instrument: PE-ICP2
Prep Date: 09/14/2007 06:55
Cal Date: 09/14/2007 09:22
Run Date: 09/14/2007 17:26
File ID: P2.091407.172623

Analyte	CAS. Number	Result	Qual	PQL	SQL	
Aluminum, Total	7429-90-5	1.36		0.100	0.0500	
Beryllium, Total	7440-41-7		U	0.00200	0.000500	
Calcium, Total	7440-70-2	2.55		0.200	0.100	
Cobalt, Total	7440-48-4		U	0.00500	0.00250	
Iron, Total	7439-89-6	1.61		0.100	0.0250	
Potassium, Total	7440-09-7	0.754	J	1.00	0.250	J,15,13 ✓
Magnesium, Total	7439-95-4	1.81		0.500	0.250	
Sodium, Total	7440-23-5	12.1		0.500	0.250	J,13 ✓
Vanadium, Total	7440-62-2		U	0.0100	0.00500	
Zinc, Total	7440-66-6	0.00714	J	0.0200	0.00500	J,15,13 ✓

U Not detected at or above adjusted sample detection limit
J The analyte was positively identified, but the quantitation was below the RL

KEMRON ENVIRONMENTAL SERVICES

Report Number: L0709261
Report Date : September 26, 2007

Sample Number: L0709261-08
Client ID: LHSMW14-090707
Matrix: Water
Workgroup Number: WG250289
Collect Date: 09/10/2007 13:30
Sample Tag: 01

PrePrep Method: NONE
Prep Method: 3005A
Analytical Method: 6010B
Analyst: KHR
Dilution: 1
Units: mg/L

Instrument: PE-ICP2
Prep Date: 09/17/2007 06:25
Cal Date: 09/18/2007 08:50
Run Date: 09/18/2007 15:00
File ID: P2.091807.150059

Analyte	CAS. Number	Result	Qual	PQL	SQL	
Aluminum, Dissolved	7429-90-5		U	0.100	0.0500	
Beryllium, Dissolved	7440-41-7		U	0.00200	0.000500	
Calcium, Dissolved	7440-70-2	3.64		0.200	0.100	
Cobalt, Dissolved	7440-48-4		U	0.00500	0.00250	
Iron, Dissolved	7439-89-6	0.0493	J	0.100	0.0250	J,15 ✓
Potassium, Dissolved	7440-09-7	0.928	J	1.00	0.250	J,15,13 ✓
Magnesium, Dissolved	7439-95-4	1.80		0.500	0.250	
Sodium, Dissolved	7440-23-5	22.5		0.500	0.250	J,13 ✓
Vanadium, Dissolved	7440-62-2		U	0.0100	0.00500	
Zinc, Dissolved	7440-66-6		U	0.0200	0.00500	UJ,13 ✓

U Not detected at or above adjusted sample detection limit
J The analyte was positively identified, but the quantitation was below the RL

KEMRON ENVIRONMENTAL SERVICES

Report Number: L0709261
Report Date : September 26, 2007

Sample Number: L0709261-09
Client ID: LHSMW15-090707
Matrix: Water
Workgroup Number: WG250152
Collect Date: 09/10/2007 15:45
Sample Tag: 01

PrePrep Method: NONE
Prep Method: 3005A
Analytical Method: 6010B
Analyst: KHR
Dilution: 1
Units: mg/L

Instrument: PE-ICP2
Prep Date: 09/14/2007 06:55
Cal Date: 09/14/2007 09:22
Run Date: 09/14/2007 17:32
File ID: P2.091407.173237

Analyte	CAS. Number	Result	Qual	PQL	SQL
Beryllium, Total	7440-41-7		U	0.00200	0.000500
Cobalt, Total	7440-48-4		U	0.00500	0.00250
Iron, Total	7439-89-6	4.31		0.100	0.0250
Potassium, Total	7440-09-7	5.70		1.00	0.250
Magnesium, Total	7439-95-4	273		0.500	0.250
Vanadium, Total	7440-62-2		U	0.0100	0.00500

J,13 ✓

U Not detected at or above adjusted sample detection limit

Report Number: L0709261
Report Date : September 26, 2007

Sample Number: L0709261-09
Client ID: LHSMW15-090707
Matrix: Water
Workgroup Number: WG250152
Collect Date: 09/10/2007 15:45
Sample Tag: DL01

PrePrep Method: NONE
Prep Method: 3005A
Analytical Method: 6010B
Analyst: KHR
Dilution: 2
Units: mg/L

Instrument: PE-ICP2
Prep Date: 09/14/2007 06:55
Cal Date: 09/17/2007 08:39
Run Date: 09/17/2007 13:22
File ID: P2.091707.132217

Analyte	CAS. Number	Result	Qual	PQL	SQL
Aluminum, Total	7429-90-5		U	0.200	0.100
Calcium, Total	7440-70-2	523		0.400	0.200

U Not detected at or above adjusted sample detection limit

KEMRON ENVIRONMENTAL SERVICES

Report Number: L0709261
Report Date : September 26, 2007

Sample Number: L0709261-09
Client ID: LHSMW15-090707
Matrix: Water
Workgroup Number: WG250152
Collect Date: 09/10/2007 15:45
Sample Tag: DL02

PrePrep Method: NONE
Prep Method: 3005A
Analytical Method: 6010B
Analyst: KHR
Dilution: 20
Units: mg/L

Instrument: PE-ICP2
Prep Date: 09/14/2007 06:55
Cal Date: 09/17/2007 08:39
Run Date: 09/17/2007 13:28
File ID: P2.091707.132841

Analyte	CAS. Number	Result	Qual	PQL	SQL	
Sodium, Total	7440-23-5	2850		10.0	5.00	J, 13
Zinc, Total	7440-66-6	300		0.400	0.100	J, 13

KEMRON ENVIRONMENTAL SERVICES

Report Number: L0709261
Report Date : September 26, 2007

Sample Number: L0709261-10
Client ID: LHSMW15-090707
Matrix: Water
Workgroup Number: WG250289
Collect Date: 09/10/2007 15:45
Sample Tag: 01

PrePrep Method: NONE
Prep Method: 3005A
Analytical Method: 6010B
Analyst: KHR
Dilution: 1
Units: mg/L

Instrument: PE-ICP2
Prep Date: 09/17/2007 06:25
Cal Date: 09/18/2007 08:50
Run Date: 09/18/2007 15:38
File ID: P2.091807.153849

Analyte	CAS. Number	Result	Qual	PQL	SQL
Beryllium, Dissolved	7440-41-7		U	0.00200	0.000500
Cobalt, Dissolved	7440-48-4		U	0.00500	0.00250
Iron, Dissolved	7439-89-6		U	0.100	0.0250
Potassium, Dissolved	7440-09-7	4.14		1.00	0.250
Magnesium, Dissolved	7439-95-4	262		0.500	0.250
Zinc, Dissolved	7440-66-6	0.00807	J	0.0200	0.00500

J, 13 ✓
J, 15, 13 ✓

U Not detected at or above adjusted sample detection limit
J The analyte was positively identified, but the quantitation was below the RL

KEMRON ENVIRONMENTAL SERVICES

Report Number: L0709261
Report Date : September 26, 2007

Sample Number: L0709261-10
Client ID: LHSMW15-090707
Matrix: Water
Workgroup Number: WG250289
Collect Date: 09/10/2007 15:45
Sample Tag: DL02

PrePrep Method: NONE
Prep Method: 3005A
Analytical Method: 6010B
Analyst: KRV
Dilution: 2
Units: mg/L

Instrument: PE-ICP2
Prep Date: 09/17/2007 06:25
Cal Date: 09/19/2007 08:57
Run Date: 09/19/2007 14:07
File ID: P2.091907.140755

Analyte	CAS. Number	Result	Qual	PQL	SQL
Aluminum, Dissolved	7429-90-5		U	0.200	0.100
Calcium, Dissolved	7440-70-2	500		0.400	0.200

U Not detected at or above adjusted sample detection limit

KEMRON ENVIRONMENTAL SERVICES

Report Number: L0709261
Report Date : September 26, 2007

Sample Number: L0709261-10
Client ID: LHSMW15-090707
Matrix: Water
Workgroup Number: WG250289
Collect Date: 09/10/2007 15:45
Sample Tag: DL01

PrePrep Method: NONE
Prep Method: 3005A
Analytical Method: 6010B
Analyst: KRV
Dilution: 20
Units: mg/L

Instrument: PE-ICP2
Prep Date: 09/17/2007 06:25
Cal Date: 09/19/2007 08:57
Run Date: 09/19/2007 14:01
File ID: P2.091907.140121

Analyte	CAS. Number	Result	Qual	PQL	SQL
Sodium, Dissolved	7440-23-5	1020		10.0	5.00
Vanadium, Dissolved	7440-62-2		U	0.200	0.100

J, B ✓

U Not detected at or above adjusted sample detection limit

KEMRON ENVIRONMENTAL SERVICES

Report Number: L0709261
Report Date : September 26, 2007

Sample Number: L0709261-11
Client ID: LHSMW19-090707
Matrix: Water
Workgroup Number: WG250152
Collect Date: 09/11/2007 08:20
Sample Tag: 01

PrePrep Method: NONE
Prep Method: 3005A
Analytical Method: 6010B
Analyst: KHR
Dilution: 1
Units: mg/L

Instrument: PE-ICP2
Prep Date: 09/14/2007 06:55
Cal Date: 09/14/2007 09:22
Run Date: 09/14/2007 17:51
File ID: P2.091407.175133

Analyte	CAS. Number	Result	Qual	PQL	SQL	
Aluminum, Total	7429-90-5	0.251		0.100	0.0500	
Beryllium, Total	7440-41-7		U	0.00200	0.000500	
Calcium, Total	7440-70-2	64.7		0.200	0.100	
Cobalt, Total	7440-48-4		U	0.00500	0.00250	
Iron, Total	7439-89-6	0.529		0.100	0.0250	
Potassium, Total	7440-09-7	2.77		1.00	0.250	J,13 ✓
Magnesium, Total	7439-95-4	44.8		0.500	0.250	
Sodium, Total	7440-23-5	163		0.500	0.250	J,13 ✓
Zinc, Total	7440-66-6	0.0136	J	0.0200	0.00500	J,15,13 ✓

U Not detected at or above adjusted sample detection limit
J The analyte was positively identified, but the quantitation was below the RL

KEMRON ENVIRONMENTAL SERVICES

Report Number: L0709261
Report Date : September 26, 2007

Sample Number: L0709261-11
Client ID: LHSMW19-090707
Matrix: Water
Workgroup Number: WG250152
Collect Date: 09/11/2007 08:20
Sample Tag: DL01

PrePrep Method: NONE
Prep Method: 3005A
Analytical Method: 6010B
Analyst: KHR
Dilution: 5
Units: mg/L

Instrument: PE-ICP2
Prep Date: 09/14/2007 06:55
Cal Date: 09/17/2007 08:39
Run Date: 09/17/2007 13:15
File ID: P2.091707.131554

Analyte	CAS. Number	Result	Qual	PQL	SQL
Vanadium, Total	7440-62-2		U	0.0500	0.0250

U Not detected at or above adjusted sample detection limit

KEMRON ENVIRONMENTAL SERVICES

Report Number: L0709261
Report Date : September 26, 2007

Sample Number: L0709261-12
Client ID: LHSMW19-090707
Matrix: Water
Workgroup Number: WG250289
Collect Date: 09/11/2007 08:20
Sample Tag: 01

PrePrep Method: NONE
Prep Method: 3005A
Analytical Method: 6010B
Analyst: KHR
Dilution: 1
Units: mg/L

Instrument: PE-ICP2
Prep Date: 09/17/2007 06:25
Cal Date: 09/18/2007 08:50
Run Date: 09/18/2007 15:45
File ID: P2.091807.154511

Analyte	CAS. Number	Result	Qual	PQL	SQL	
Aluminum, Dissolved	7429-90-5		U	0.100	0.0500	
Beryllium, Dissolved	7440-41-7		U	0.00200	0.000500	
Calcium, Dissolved	7440-70-2	68.4		0.200	0.100	
Cobalt, Dissolved	7440-48-4		U	0.00500	0.00250	
Iron, Dissolved	7439-89-6		U	0.100	0.0250	
Potassium, Dissolved	7440-09-7	2.57		1.00	0.250	J, 13 ✓
Magnesium, Dissolved	7439-95-4	39.8		0.500	0.250	
Sodium, Dissolved	7440-23-5	172		0.500	0.250	J, 13 ✓
Zinc, Dissolved	7440-66-6		U	0.0200	0.00500	UJ, 13 ✓

U Not detected at or above adjusted sample detection limit

KEMRON ENVIRONMENTAL SERVICES

Report Number: L0709261
Report Date : September 26, 2007

Sample Number: L0709261-12
Client ID: LHSMW19-090707
Matrix: Water
Workgroup Number: WG250289
Collect Date: 09/11/2007 08:20
Sample Tag: DL01

PrePrep Method: NONE
Prep Method: 3005A
Analytical Method: 6010B
Analyst: KRV
Dilution: 20
Units: mg/L

Instrument: PE-ICP2
Prep Date: 09/17/2007 06:25
Cal Date: 09/19/2007 08:57
Run Date: 09/19/2007 13:54
File ID: P2.091907.135453

Analyte	CAS. Number	Result	Qual	PQL	SQL
Vanadium, Dissolved	7440-62-2		U	0.200	0.100

U Not detected at or above adjusted sample detection limit

KEMRON ENVIRONMENTAL SERVICES

Report Number: L0709261
Report Date : September 26, 2007

Sample Number: L0709261-13
Client ID: LHSMW22-090707
Matrix: Water
Workgroup Number: WG250152
Collect Date: 09/11/2007 09:50
Sample Tag: 01

PrePrep Method: NONE
Prep Method: 3005A
Analytical Method: 6010B
Analyst: KHR
Dilution: 1
Units: mg/L

Instrument: PE-ICP2
Prep Date: 09/14/2007 06:55
Cal Date: 09/14/2007 09:22
Run Date: 09/14/2007 17:57
File ID: P2.091407.175757

Analyte	CAS. Number	Result	Qual	PQL	SQL
Beryllium, Total	7440-41-7		U	0.00200	0.000500
Cobalt, Total	7440-48-4	0.0830		0.00500	0.00250
Iron, Total	7439-89-6	2.91		0.100	0.0250
Potassium, Total	7440-09-7	3.26		1.00	0.250
Vanadium, Total	7440-62-2	0.00924	J	0.0100	0.00500
Zinc, Total	7440-66-6	0.0488		0.0200	0.00500

J,13 ✓
J,15 ✓
J,B ✓

U Not detected at or above adjusted sample detection limit
J The analyte was positively identified, but the quantitation was below the RL

KEMRON ENVIRONMENTAL SERVICES

Report Number: L0709261
Report Date : September 26, 2007

Sample Number: L0709261-13
Client ID: LHSMW22-090707
Matrix: Water
Workgroup Number: WG250152
Collect Date: 09/11/2007 09:50
Sample Tag: DL01

PrePrep Method: NONE
Prep Method: 3005A
Analytical Method: 6010B
Analyst: KHR
Dilution: 2
Units: mg/L

Instrument: PE-ICP2
Prep Date: 09/14/2007 06:55
Cal Date: 09/17/2007 08:39
Run Date: 09/17/2007 13:35
File ID: P2.091707.133512

Analyte	CAS. Number	Result	Qual	PQL	SQL
Aluminum, Total	7429-90-5		U	0.200	0.100
Calcium, Total	7440-70-2	562		0.400	0.200
Magnesium, Total	7439-95-4	451		1.00	0.500

U Not detected at or above adjusted sample detection limit

KEMRON ENVIRONMENTAL SERVICES

Report Number: L0709261
Report Date : September 26, 2007

Sample Number: L0709261-13
Client ID: LHSMW22-090707
Matrix: Water
Workgroup Number: WG250152
Collect Date: 09/11/2007 09:50
Sample Tag: DL02

PrePrep Method: NONE
Prep Method: 3005A
Analytical Method: 6010B
Analyst: KHR
Dilution: 20
Units: mg/L

Instrument: PE-ICP2
Prep Date: 09/14/2007 06:55
Cal Date: 09/17/2007 08:39
Run Date: 09/17/2007 13:41
File ID: P2.091707.134143

Analyte	CAS. Number	Result	Qual	PQL	SQL
Sodium, Total	7440-23-5	911		10.0	5.00

J,13 ✓

KEMRON ENVIRONMENTAL SERVICES

Report Number: L0709261
Report Date : September 26, 2007

Sample Number: L0709261-14
Client ID: LHSMW22-090707
Matrix: Water
Workgroup Number: WG250289
Collect Date: 09/11/2007 09:50
Sample Tag: 01

PrePrep Method: NONE
Prep Method: 3005A
Analytical Method: 6010B
Analyst: KHR
Dilution: 1
Units: mg/L

Instrument: PE-ICP2
Prep Date: 09/17/2007 06:25
Cal Date: 09/18/2007 08:50
Run Date: 09/18/2007 15:51
File ID: P2.091807.155130

Analyte	CAS. Number	Result	Qual	PQL	SQL	
Beryllium, Dissolved	7440-41-7		U	0.00200	0.000500	
Cobalt, Dissolved	7440-48-4	0.0929		0.00500	0.00250	
Iron, Dissolved	7439-89-6	2.65		0.100	0.0250	
Potassium, Dissolved	7440-09-7	3.24		1.00	0.250	J,B✓
Vanadium, Dissolved	7440-62-2		U	0.0100	0.00500	
Zinc, Dissolved	7440-66-6	0.0332		0.0200	0.00500	J,B✓

U Not detected at or above adjusted sample detection limit

KEMRON ENVIRONMENTAL SERVICES

Report Number: L0709261
Report Date : September 26, 2007

Sample Number: L0709261-14
Client ID: LHSMW22-090707
Matrix: Water
Workgroup Number: WG250289
Collect Date: 09/11/2007 09:50
Sample Tag: DL01

PrePrep Method: NONE
Prep Method: 3005A
Analytical Method: 6010B
Analyst: KRV
Dilution: 2
Units: mg/L

Instrument: PE-ICP2
Prep Date: 09/17/2007 06:25
Cal Date: 09/19/2007 08:57
Run Date: 09/19/2007 14:52
File ID: P2.091907.145224

Analyte	CAS. Number	Result	Qual	PQL	SQL
Aluminum, Dissolved	7429-90-5		U	0.200	0.100
Calcium, Dissolved	7440-70-2	555		0.400	0.200
Magnesium, Dissolved	7439-95-4	466		1.00	0.500

U Not detected at or above adjusted sample detection limit

KEMRON ENVIRONMENTAL SERVICES

Report Number: L0709261
Report Date : September 26, 2007

Sample Number: L0709261-14
Client ID: LHSMW22-090707
Matrix: Water
Workgroup Number: WG250289
Collect Date: 09/11/2007 09:50
Sample Tag: DL02

PrePrep Method: NONE
Prep Method: 3005A
Analytical Method: 6010B
Analyst: KRV
Dilution: 20
Units: mg/L

Instrument: PE-ICP2
Prep Date: 09/17/2007 06:25
Cal Date: 09/19/2007 08:57
Run Date: 09/19/2007 14:58
File ID: P2.091907.145842

Analyte	CAS. Number	Result	Qual	PQL	SQL
Sodium, Dissolved	7440-23-5	945		10.0	5.00

J, 13 ✓

KEMRON ENVIRONMENTAL SERVICES

Report Number: L0709261
Report Date : September 26, 2007

Sample Number: L0709261-15
Client ID: LHSMW23-090707
Matrix: Water
Workgroup Number: WG250152
Collect Date: 09/11/2007 13:35
Sample Tag: 01

PrePrep Method: NONE
Prep Method: 3005A
Analytical Method: 6010B
Analyst: KHR
Dilution: 1
Units: mg/L

Instrument: PE-ICP2
Prep Date: 09/14/2007 06:55
Cal Date: 09/14/2007 09:22
Run Date: 09/14/2007 18:04
File ID: P2.091407.180426

Analyte	CAS. Number	Result	Qual	PQL	SQL	
Aluminum, Total	7429-90-5		U	0.100	0.0500	
Beryllium, Total	7440-41-7		U	0.00200	0.000500	
Calcium, Total	7440-70-2	330		0.200	0.100	
Cobalt, Total	7440-48-4	0.00437	J	0.00500	0.00250	J,15
Iron, Total	7439-89-6	5.59		0.100	0.0250	
Potassium, Total	7440-09-7	3.07		1.00	0.250	J,13
Magnesium, Total	7439-95-4	237		0.500	0.250	
Vanadium, Total	7440-62-2		U	0.0100	0.00500	
Zinc, Total	7440-66-6	0.0143	J	0.0200	0.00500	J,15,13

U Not detected at or above adjusted sample detection limit
J The analyte was positively identified, but the quantitation was below the RL

KEMRON ENVIRONMENTAL SERVICES

Report Number: L0709261
Report Date : September 26, 2007

Sample Number: L0709261-15
Client ID: LHSMW23-090707
Matrix: Water
Workgroup Number: WG250152
Collect Date: 09/11/2007 13:35
Sample Tag: DL01

PrePrep Method: NONE
Prep Method: 3005A
Analytical Method: 6010B
Analyst: KHR
Dilution: 20
Units: mg/L

Instrument: PE-ICP2
Prep Date: 09/14/2007 06:55
Cal Date: 09/17/2007 08:39
Run Date: 09/17/2007 13:08
File ID: P2.091707.130841

Analyte	CAS. Number	Result	Qual	PQL	SQL
Sodium, Total	7440-23-5	460		10.0	5.00

J, B

KEMRON ENVIRONMENTAL SERVICES

Report Number: L0709261
Report Date : September 26, 2007

Sample Number: L0709261-16
Client ID: LHSMW23-090707
Matrix: Water
Workgroup Number: WG250289
Collect Date: 09/11/2007 13:35
Sample Tag: 01

PrePrep Method: NONE
Prep Method: 3005A
Analytical Method: 6010B
Analyst: KHR
Dilution: 1
Units: mg/L

Instrument: PE-ICP2
Prep Date: 09/17/2007 06:25
Cal Date: 09/18/2007 08:50
Run Date: 09/18/2007 15:57
File ID: P2.091807.155759

Analyte	CAS. Number	Result	Qual	PQL	SQL	
Aluminum, Dissolved	7429-90-5		U	0.100	0.0500	
Beryllium, Dissolved	7440-41-7		U	0.00200	0.000500	
Calcium, Dissolved	7440-70-2	345		0.200	0.100	
Cobalt, Dissolved	7440-48-4	0.00411	J	0.00500	0.00250	J,15✓
Iron, Dissolved	7439-89-6	0.147		0.100	0.0250	J,13✓
Potassium, Dissolved	7440-09-7	3.23		1.00	0.250	
Magnesium, Dissolved	7439-95-4	220		0.500	0.250	
Zinc, Dissolved	7440-66-6		U	0.0200	0.00500	UJ,13✓

U Not detected at or above adjusted sample detection limit
J The analyte was positively identified, but the quantitation was below the RL

KEMRON ENVIRONMENTAL SERVICES

Report Number: L0709261
Report Date : September 26, 2007

Sample Number: L0709261-16
Client ID: LHSMW23-090707
Matrix: Water
Workgroup Number: WG250289
Collect Date: 09/11/2007 13:35
Sample Tag: DL01

PrePrep Method: NONE
Prep Method: 3005A
Analytical Method: 6010B
Analyst: KRV
Dilution: 20
Units: mg/L

Instrument: PE-ICP2
Prep Date: 09/17/2007 06:25
Cal Date: 09/19/2007 08:57
Run Date: 09/19/2007 13:35
File ID: P2.091907.133500

Analyte	CAS. Number	Result	Qual	PQL	SQL
Sodium, Dissolved	7440-23-5	505		10.0	5.00
Vanadium, Dissolved	7440-62-2		U	0.200	0.100

5, 13 ✓

U Not detected at or above adjusted sample detection limit

KEMRON ENVIRONMENTAL SERVICES

Report Number: L0709261
Report Date : September 26, 2007

Sample Number: L0709261-17
Client ID: LHSMW24-090707
Matrix: Water
Workgroup Number: WG250152
Collect Date: 09/11/2007 15:35
Sample Tag: 01

PrePrep Method: NONE
Prep Method: 3005A
Analytical Method: 6010B
Analyst: KHR
Dilution: 1
Units: mg/L

Instrument: PE-ICP2
Prep Date: 09/14/2007 06:55
Cal Date: 09/14/2007 09:22
Run Date: 09/14/2007 18:10
File ID: P2.091407.181047

Analyte	CAS. Number	Result	Qual	PQL	SQL	
Beryllium, Total	7440-41-7		U	0.00200	0.000500	
Cobalt, Total	7440-48-4		U	0.00500	0.00250	
Iron, Total	7439-89-6	0.449		0.100	0.0250	
Potassium, Total	7440-09-7	2.21		1.00	0.250	J, 13 ✓
Magnesium, Total	7439-95-4	393		0.500	0.250	
Vanadium, Total	7440-62-2		U	0.0100	0.00500	
Zinc, Total	7440-66-6	0.00619	J	0.0200	0.00500	J, 15, 13 ✓

U Not detected at or above adjusted sample detection limit
J The analyte was positively identified, but the quantitation was below the RL

KEMRON ENVIRONMENTAL SERVICES

Report Number: L0709261
Report Date : September 26, 2007

Sample Number: L0709261-17
Client ID: LHSMW24-090707
Matrix: Water
Workgroup Number: WG250152
Collect Date: 09/11/2007 15:35
Sample Tag: DL01

PrePrep Method: NONE
Prep Method: 3005A
Analytical Method: 6010B
Analyst: KHR
Dilution: 2
Units: mg/L

Instrument: PE-ICP2
Prep Date: 09/14/2007 06:55
Cal Date: 09/17/2007 08:39
Run Date: 09/17/2007 14:01
File ID: P2.091707.140104

Analyte	CAS. Number	Result	Qual	PQL	SQL
Aluminum, Total	7429-90-5		U	0.200	0.100
Calcium, Total	7440-70-2	610		0.400	0.200

U Not detected at or above adjusted sample detection limit

KEMRON ENVIRONMENTAL SERVICES

Report Number: L0709261
Report Date : September 26, 2007

Sample Number: L0709261-17
Client ID: LHSMW24-090707
Matrix: Water
Workgroup Number: WG250152
Collect Date: 09/11/2007 15:35
Sample Tag: DL02

PrePrep Method: NONE
Prep Method: 3005A
Analytical Method: 6010B
Analyst: KHR
Dilution: 20
Units: mg/L

Instrument: PE-ICP2
Prep Date: 09/14/2007 06:55
Cal Date: 09/17/2007 08:39
Run Date: 09/17/2007 14:07
File ID: P2.091707.140724

Analyte	CAS. Number	Result	Qual	PQL	SQL
Sodium, Total	7440-23-5	1160		10.0	5.00

J,13 ✓

KEMRON ENVIRONMENTAL SERVICES

Report Number: L0709261
Report Date : September 26, 2007

Sample Number: L0709261-18
Client ID: LHSMW24-090707
Matrix: Water
Workgroup Number: WG250289
Collect Date: 09/11/2007 15:35
Sample Tag: 01

PrePrep Method: NONE
Prep Method: 3005A
Analytical Method: 6010B
Analyst: KHR
Dilution: 1
Units: mg/L

Instrument: PE-ICP2
Prep Date: 09/17/2007 06:25
Cal Date: 09/18/2007 08:50
Run Date: 09/18/2007 16:04
File ID: P2.091807.160424

Analyte	CAS. Number	Result	Qual	PQL	SQL	
Beryllium, Dissolved	7440-41-7		U	0.00200	0.000500	
Cobalt, Dissolved	7440-48-4		U	0.00500	0.00250	
Iron, Dissolved	7439-89-6		U	0.100	0.0250	UJ, 17 ✓
Potassium, Dissolved	7440-09-7	2.43		1.00	0.250	J, 13 ✓
Magnesium, Dissolved	7439-95-4	370		0.500	0.250	
Zinc, Dissolved	7440-66-6		U	0.0200	0.00500	UJ, 13 ✓

U Not detected at or above adjusted sample detection limit

KEMRON ENVIRONMENTAL SERVICES

Report Number: L0709261
Report Date : September 26, 2007

Sample Number: L0709261-18
Client ID: LHSMW24-090707
Matrix: Water
Workgroup Number: WG250289
Collect Date: 09/11/2007 15:35
Sample Tag: DL01

PrePrep Method: NONE
Prep Method: 3005A
Analytical Method: 6010B
Analyst: KRV
Dilution: 2
Units: mg/L

Instrument: PE-ICP2
Prep Date: 09/17/2007 06:25
Cal Date: 09/19/2007 08:57
Run Date: 09/19/2007 14:27
File ID: P2.091907.142700

Analyte	CAS. Number	Result	Qual	PQL	SQL
Aluminum, Dissolved	7429-90-5		U	0.200	0.100
Calcium, Dissolved	7440-70-2	612		0.400	0.200

U Not detected at or above adjusted sample detection limit

KEMRON ENVIRONMENTAL SERVICES

Report Number: L0709261
Report Date : September 26, 2007

Sample Number: L0709261-18
Client ID: LHSMW24-090707
Matrix: Water
Workgroup Number: WG250289
Collect Date: 09/11/2007 15:35
Sample Tag: DL02

PrePrep Method: NONE
Prep Method: 3005A
Analytical Method: 6010B
Analyst: KRV
Dilution: 20
Units: mg/L

Instrument: PE-ICP2
Prep Date: 09/17/2007 06:25
Cal Date: 09/19/2007 08:57
Run Date: 09/19/2007 14:33
File ID: P2.091907.143324

Analyte	CAS. Number	Result	Qual	PQL	SQL
Sodium, Dissolved	7440-23-5	1150		10.0	5.00

J, B ✓

KEMRON ENVIRONMENTAL SERVICES

Report Number: L0709261
Report Date : September 26, 2007

Sample Number: L0709261-18
Client ID: LHSMW24-090707
Matrix: Water
Workgroup Number: WG250289
Collect Date: 09/11/2007 15:35
Sample Tag: DL03

PrePrep Method: NONE
Prep Method: 3005A
Analytical Method: 6010B
Analyst: KHR
Dilution: 50
Units: mg/L

Instrument: PE-ICP2
Prep Date: 09/17/2007 06:25
Cal Date: 09/20/2007 08:22
Run Date: 09/20/2007 10:06
File ID: P2.092007.100630

Analyte	CAS. Number	Result	Qual	PQL	SQL
Vanadium, Dissolved	7440-62-2		U	0.500	0.250

U Not detected at or above adjusted sample detection limit

KEMRON ENVIRONMENTAL SERVICES

Report Number: L0709261
Report Date : September 26, 2007

Sample Number: L0709261-19
Client ID: LHSMW24-090707-FD
Matrix: Water
Workgroup Number: WG250152
Collect Date: 09/11/2007 15:35
Sample Tag: 01

PrePrep Method: NONE
Prep Method: 3005A
Analytical Method: 6010B
Analyst: KHR
Dilution: 1
Units: mg/L

Instrument: PE-ICP2
Prep Date: 09/14/2007 06:55
Cal Date: 09/14/2007 09:22
Run Date: 09/14/2007 18:17
File ID: P2.091407.181706

Analyte	CAS. Number	Result	Qual	PQL	SQL	
Beryllium, Total	7440-41-7		U	0.00200	0.000500	
Cobalt, Total	7440-48-4		U	0.00500	0.00250	
Iron, Total	7439-89-6	0.413		0.100	0.0250	
Potassium, Total	7440-09-7	2.25		1.00	0.250	J,13 ✓
Magnesium, Total	7439-95-4	391		0.500	0.250	
Vanadium, Total	7440-62-2		U	0.0100	0.00500	
Zinc, Total	7440-66-6	0.00579	J	0.0200	0.00500	J,15,13 ✓

U Not detected at or above adjusted sample detection limit
J The analyte was positively identified, but the quantitation was below the RL

	NS	FD	
Fe	0.413	0.1 U	= 122% D

KEMRON ENVIRONMENTAL SERVICES

Report Number: L0709261
Report Date : September 26, 2007

Sample Number: L0709261-19
Client ID: LHSMW24-090707-FD
Matrix: Water
Workgroup Number: WG250152
Collect Date: 09/11/2007 15:35
Sample Tag: DL01

PrePrep Method: NONE
Prep Method: 3005A
Analytical Method: 6010B
Analyst: KHR
Dilution: 2
Units: mg/L

Instrument: PE-ICP2
Prep Date: 09/14/2007 06:55
Cal Date: 09/17/2007 08:39
Run Date: 09/17/2007 14:13
File ID: P2.091707.141345

Analyte	CAS. Number	Result	Qual	PQL	SQL
Aluminum, Total	7429-90-5		U	0.200	0.100
Calcium, Total	7440-70-2	581		0.400	0.200

U Not detected at or above adjusted sample detection limit

KEMRON ENVIRONMENTAL SERVICES

Report Number: L0709261
Report Date : September 26, 2007

Sample Number: L0709261-19
Client ID: LHSMW24-090707-FD
Matrix: Water
Workgroup Number: WG250152
Collect Date: 09/11/2007 15:35
Sample Tag: DL02

PrePrep Method: NONE
Prep Method: 3005A
Analytical Method: 6010B
Analyst: KHR
Dilution: 20
Units: mg/L

Instrument: PE-ICP2
Prep Date: 09/14/2007 06:55
Cal Date: 09/17/2007 08:39
Run Date: 09/17/2007 14:20
File ID: P2.091707.142009

Analyte	CAS. Number	Result	Qual	PQL	SQL
Sodium, Total	7440-23-5	1450		10.0	5.00

J, B ✓

KEMRON ENVIRONMENTAL SERVICES

Report Number: L0709261
Report Date : September 26, 2007

Sample Number: L0709261-20
Client ID: LHSMW24-090707-FD
Matrix: Water
Workgroup Number: WG250289
Collect Date: 09/11/2007 15:35
Sample Tag: 01

PrePrep Method: NONE
Prep Method: 3005A
Analytical Method: 6010B
Analyst: KHR
Dilution: 1
Units: mg/L

Instrument: PE-ICP2
Prep Date: 09/17/2007 06:25
Cal Date: 09/18/2007 08:50
Run Date: 09/18/2007 16:10
File ID: P2.091807.161044

Analyte	CAS. Number	Result	Qual	PQL	SQL	
Beryllium, Dissolved	7440-41-7		U	0.00200	0.000500	
Cobalt, Dissolved	7440-48-4		U	0.00500	0.00250	
Iron, Dissolved	7439-89-6		U	0.100	0.0250	
Potassium, Dissolved	7440-09-7	2.42		1.00	0.250	J,13 ✓
Magnesium, Dissolved	7439-95-4	367		0.500	0.250	
Zinc, Dissolved	7440-66-6		U	0.0200	0.00500	UJ,13 ✓

U Not detected at or above adjusted sample detection limit

KEMRON ENVIRONMENTAL SERVICES

Report Number: L0709261
Report Date : September 26, 2007

Sample Number: L0709261-20
Client ID: LHSMW24-090707-FD
Matrix: Water
Workgroup Number: WG250289
Collect Date: 09/11/2007 15:35
Sample Tag: DL01

PrePrep Method: NONE
Prep Method: 3005A
Analytical Method: 6010B
Analyst: KRV
Dilution: 2
Units: mg/L

Instrument: PE-ICP2
Prep Date: 09/17/2007 06:25
Cal Date: 09/19/2007 08:57
Run Date: 09/19/2007 14:39
File ID: P2.091907.143940

Analyte	CAS. Number	Result	Qual	PQL	SQL
Aluminum, Dissolved	7429-90-5		U	0.200	0.100
Calcium, Dissolved	7440-70-2	605		0.400	0.200

U Not detected at or above adjusted sample detection limit

KEMRON ENVIRONMENTAL SERVICES

Report Number: L0709261
Report Date : September 26, 2007

Sample Number: L0709261-20
Client ID: LHSMW24-090707-FD
Matrix: Water
Workgroup Number: WG250289
Collect Date: 09/11/2007 15:35
Sample Tag: DL02

PrePrep Method: NONE
Prep Method: 3005A
Analytical Method: 6010B
Analyst: KRV
Dilution: 20
Units: mg/L

Instrument: PE-ICP2
Prep Date: 09/17/2007 06:25
Cal Date: 09/19/2007 08:57
Run Date: 09/19/2007 14:46
File ID: P2.091907.144601

Analyte	CAS. Number	Result	Qual	PQL	SQL
Sodium, Dissolved	7440-23-5	1150		10.0	5.00

J,13

KEMRON ENVIRONMENTAL SERVICES

Report Number: L0709261
Report Date : September 26, 2007

Sample Number: L0709261-20
Client ID: LHSMW24-090707-FD
Matrix: Water
Workgroup Number: WG250289
Collect Date: 09/11/2007 15:35
Sample Tag: DL03

PrePrep Method: NONE
Prep Method: 3005A
Analytical Method: 6010B
Analyst: KHR
Dilution: 50
Units: mg/L

Instrument: PR-ICP2
Prep Date: 09/17/2007 06:25
Cal Date: 09/20/2007 08:22
Run Date: 09/20/2007 10:12
File ID: P2.092007.101249

Analyte	CAS. Number	Result	Qual	PQL	SQL
Vanadium, Dissolved	7440-62-2		U	0.500	0.250

U Not detected at or above adjusted sample detection limit

KEMRON ENVIRONMENTAL SERVICES

Report Number: L0709261
Report Date : September 26, 2007

Sample Number: L0709261-01
Client ID: 46WW02-090707
Matrix: Water
Workgroup Number: WG250211
Collect Date: 09/07/2007 08:30
Sample Tag: DL01

PrePrep Method: NONE
Prep Method: 3015
Analytical Method: 6020
Analyst: JYH
Dilution: 10
Units: mg/L

Instrument: ELAN-ICP
Prep Date: 09/14/2007 08:30
Cal Date: 09/17/2007 10:39
Run Date: 09/17/2007 12:11
File ID: EL.091707.121144

Analyte	CAS. Number	Result	Qual	PQL	SQL	
Silver, Total	7440-22-4		U	0.0100	0.00250	
Arsenic, Total	7440-38-2		U	0.0100	0.00250	U,13
Barium, Total	7440-39-3	0.0219	J	0.0300	0.00500	J,15
Cadmium, Total	7440-43-9	0.00193	J	0.00500	0.00125	J,15
Chromium, Total	7440-47-3	0.00887	J	0.0200	0.00500	J,13,15
Copper, Total	7440-50-8	0.00550	J	0.0200	0.00500	J,13,15
Lead, Total	7439-92-1		U	0.00500	0.00250	
Manganese, Total	7439-96-5	0.178		0.0200	0.00500	
Nickel, Total	7440-02-0	0.0616		0.0400	0.0100	
Antimony, Total	7440-36-0		U	0.0100	0.00250	
Selenium, Total	7782-49-2		U	0.0100	0.00500	U,13
Thallium, Total	7440-28-0	0.00388		0.00200	0.000500	J,13

U Not detected at or above adjusted sample detection limit
J The analyte was positively identified, but the quantitation was below the RL

KEMRON ENVIRONMENTAL SERVICES

Report Number: L0709261
Report Date : September 26, 2007

Sample Number: L0709261-02
Client ID: 46WW02-090707
Matrix: Water
Workgroup Number: WG250414
Collect Date: 09/07/2007 08:30
Sample Tag: DL01

PrePrep Method: NONE
Prep Method: 3015
Analytical Method: 6020
Analyst: JYH
Dilution: 10
Units: mg/L

Instrument: ELAN-ICP
Prep Date: 09/18/2007 10:00
Cal Date: 09/19/2007 10:07
Run Date: 09/19/2007 11:20
File ID: EL.091907.112027

Analyte	CAS. Number	Result	Qual	PQL	SQL	
Silver, Dissolved	7440-22-4		U	0.0100	0.00250	
Arsenic, Dissolved	7440-38-2		U	0.0100	0.00250	
Barium, Dissolved	7440-39-3	0.0195	J	0.0300	0.00500	J, 13, 15 ✓
Cadmium, Dissolved	7440-43-9		U	0.00500	0.00125	
Chromium, Dissolved	7440-47-3		U	0.0200	0.00500	UJ, 13 ✓
Copper, Dissolved	7440-50-8		U	0.0200	0.00500	
Lead, Dissolved	7439-92-1		U	0.00500	0.00250	
Manganese, Dissolved	7439-96-5	0.148		0.0200	0.00500	J, 13 ✓
Nickel, Dissolved	7440-02-0	0.0586		0.0400	0.0100	J, 13 ✓
Antimony, Dissolved	7440-36-0		U	0.0100	0.00250	
Selenium, Dissolved	7782-49-2		U	0.0100	0.00500	
Thallium, Dissolved	7440-28-0	0.00348		0.00200	0.000500	J, 13 ✓

U Not detected at or above adjusted sample detection limit
J The analyte was positively identified, but the quantitation was below the RL

KEMRON ENVIRONMENTAL SERVICES

Report Number: L0709261
Report Date : September 26, 2007

Sample Number: L0709261-03
Client ID: 46WW04-090707
Matrix: Water
Workgroup Number: WG250211
Collect Date: 09/07/2007 10:10
Sample Tag: DL01

PrePrep Method: NONE
Prep Method: 3015
Analytical Method: 6020
Analyst: JYH
Dilution: 10
Units: mg/L

Instrument: ELAN-ICP
Prep Date: 09/14/2007 08:30
Cal Date: 09/17/2007 10:39
Run Date: 09/17/2007 12:18
File ID: EL.091707.121816

Analyte	CAS. Number	Result	Qual	PQL	SQL	
Silver, Total	7440-22-4		U	0.0100	0.00250	
Arsenic, Total	7440-38-2	0.00287	J	0.0100	0.00250	J,13,15 ✓
Barium, Total	7440-39-3	0.0296	J	0.0300	0.00500	J,15 ✓
Cadmium, Total	7440-43-9		U	0.00500	0.00125	
Chromium, Total	7440-47-3	0.509		0.0200	0.00500	
Copper, Total	7440-50-8	0.0137	J	0.0200	0.00500	J,13,15 ✓
Lead, Total	7439-92-1		U	0.00500	0.00250	
Antimony, Total	7440-36-0		U	0.0100	0.00250	
Selenium, Total	7782-49-2	0.00921	J	0.0100	0.00500	J,13,15 ✓
Thallium, Total	7440-28-0	0.00761		0.00200	0.000500	J,13 ✓

J The analyte was positively identified, but the quantitation was below the RL
U Not detected at or above adjusted sample detection limit

KEMRON ENVIRONMENTAL SERVICES

Report Number: L0709261
Report Date : September 26, 2007

Sample Number: L0709261-03
Client ID: 46WW04-090707
Matrix: Water
Workgroup Number: WG250211
Collect Date: 09/07/2007 10:10
Sample Tag: DL02

PrePrep Method: NONE
Prep Method: 3015
Analytical Method: 6020
Analyst: JYH
Dilution: 100
Units: mg/L

Instrument: ELAN-ICP
Prep Date: 09/14/2007 08:30
Cal Date: 09/17/2007 10:39
Run Date: 09/17/2007 14:36
File ID: EL.091707.143654

Analyte	CAS. Number	Result	Qual	PQL	SQL
Manganese, Total	7439-96-5	3.44		0.200	0.0500
Nickel, Total	7440-02-0	3.04		0.400	0.100

KEMRON ENVIRONMENTAL SERVICES

Report Number: L0709261
Report Date : September 26, 2007

Sample Number: L0709261-04
Client ID: 46WW04-090707
Matrix: Water
Workgroup Number: WG250414
Collect Date: 09/07/2007 10:10
Sample Tag: DL01

PrePrep Method: NONE
Prep Method: 3015
Analytical Method: 6020
Analyst: JYH
Dilution: 10
Units: mg/L

Instrument: ELAN-ICP
Prep Date: 09/18/2007 10:00
Cal Date: 09/19/2007 10:07
Run Date: 09/19/2007 11:40
File ID: EL.091907.114000

Analyte	CAS. Number	Result	Qual	PQL	SQL	
Silver, Dissolved	7440-22-4		U	0.0100	0.00250	
Arsenic, Dissolved	7440-38-2		U	0.0100	0.00250	
Barium, Dissolved	7440-39-3	0.0356		0.0300	0.00500	J13 ✓
Cadmium, Dissolved	7440-43-9		U	0.00500	0.00125	
Chromium, Dissolved	7440-47-3	0.0128	J	0.0200	0.00500	J,13,15 ✓
Copper, Dissolved	7440-50-8		U	0.0200	0.00500	
Lead, Dissolved	7439-92-1		U	0.00500	0.00250	
Antimony, Dissolved	7440-36-0		U	0.0100	0.00250	
Selenium, Dissolved	7782-49-2	0.00561	J	0.0100	0.00500	
Thallium, Dissolved	7440-28-0	0.00905		0.00200	0.000500	J,13 ✓

U Not detected at or above adjusted sample detection limit
J The analyte was positively identified, but the quantitation was below the RL

KEMRON ENVIRONMENTAL SERVICES

Report Number: L0709261
Report Date : September 26, 2007

Sample Number: L0709261-04
Client ID: 46WW04-090707
Matrix: Water
Workgroup Number: WG250414
Collect Date: 09/07/2007 10:10
Sample Tag: DL02

PrePrep Method: NONE
Prep Method: 3015
Analytical Method: 6020
Analyst: JYH
Dilution: 100
Units: mg/L

Instrument: ELAN-ICP
Prep Date: 09/18/2007 10:00
Cal Date: 09/19/2007 10:07
Run Date: 09/19/2007 13:05
File ID: EL.091907.130515

Analyte	CAS. Number	Result	Qual	PQL	SQL
Manganese, Dissolved	7439-96-5	2.95		0.200	0.0500
Nickel, Dissolved	7440-02-0	3.03		0.400	0.100

J, B ✓
J, B ✓

KEMRON ENVIRONMENTAL SERVICES

Report Number: L0709261
Report Date : September 26, 2007

Sample Number: L0709261-05
Client ID: LHSMW11-090707
Matrix: Water
Workgroup Number: WG250211
Collect Date: 09/07/2007 12:20
Sample Tag: DL01

PrePrep Method: NONE
Prep Method: 3015
Analytical Method: 6020
Analyst: JYH
Dilution: 10
Units: mg/L

Instrument: ELAN-ICP
Prep Date: 09/14/2007 08:30
Cal Date: 09/17/2007 10:39
Run Date: 09/17/2007 12:24
File ID: EL.091707.122448

Analyte	CAS. Number	Result	Qual	PQL	SQL	
Silver, Total	7440-22-4		U	0.0100	0.00250	
Arsenic, Total	7440-38-2	0.00531	J	0.0100	0.00250	J, B, S ✓
Barium, Total	7440-39-3	0.0495		0.0300	0.00500	
Cadmium, Total	7440-43-9		U	0.00500	0.00125	
Chromium, Total	7440-47-3	1.02		0.0200	0.00500	
Copper, Total	7440-50-8	0.0287		0.0200	0.00500	J, B ✓
Lead, Total	7439-92-1		U	0.00500	0.00250	
Antimony, Total	7440-36-0		U	0.0100	0.00250	
Selenium, Total	7782-49-2	0.0187		0.0100	0.00500	J, B ✓
Thallium, Total	7440-28-0	0.00854		0.00200	0.000500	J, B ✓

J The analyte was positively identified, but the quantitation was below the RL
U Not detected at or above adjusted sample detection limit

KEMRON ENVIRONMENTAL SERVICES

Report Number: L0709261
Report Date : September 26, 2007

Sample Number: L0709261-05
Client ID: LHSMW11-090707
Matrix: Water
Workgroup Number: WG250211
Collect Date: 09/07/2007 12:20
Sample Tag: DL02

PrePrep Method: NONE
Prep Method: 3015
Analytical Method: 6020
Analyst: JYH
Dilution: 100
Units: mg/L

Instrument: ELAN-ICP
Prep Date: 09/14/2007 08:30
Cal Date: 09/17/2007 10:39
Run Date: 09/17/2007 14:43
File ID: EL.091707.144326

Analyte	CAS. Number	Result	Qual	PQL	SQL
Manganese, Total	7439-96-5	1.38		0.200	0.0500
Nickel, Total	7440-02-0	2.07		0.400	0.100

KEMRON ENVIRONMENTAL SERVICES

Report Number: L0709261
Report Date : September 26, 2007

Sample Number: L0709261-06
Client ID: LHSMW11-090707
Matrix: Water
Workgroup Number: WG250414
Collect Date: 09/07/2007 12:20
Sample Tag: DL01

PrePrep Method: NONE
Prep Method: 3015
Analytical Method: 6020
Analyst: JYH
Dilution: 10
Units: mg/L

Instrument: ELAN-ICP
Prep Date: 09/18/2007 10:00
Cal Date: 09/19/2007 10:07
Run Date: 09/19/2007 11:46
File ID: EL.091907.114632

Analyte	CAS. Number	Result	Qual	PQL	SQL	
Silver, Dissolved	7440-22-4		U	0.0100	0.00250	
Arsenic, Dissolved	7440-38-2	0.00335	J	0.0100	0.00250	
Barium, Dissolved	7440-39-3	0.0514		0.0300	0.00500	J,13
Cadmium, Dissolved	7440-43-9		U	0.00500	0.00125	
Chromium, Dissolved	7440-47-3	0.00949	J	0.0200	0.00500	J,13,15
Copper, Dissolved	7440-50-8	0.00542	J	0.0200	0.00500	
Lead, Dissolved	7439-92-1		U	0.00500	0.00250	
Manganese, Dissolved	7439-96-5	1.06		0.0200	0.00500	J,13
Nickel, Dissolved	7440-02-0	1.67		0.0400	0.0100	J,13
Antimony, Dissolved	7440-36-0		U	0.0100	0.00250	
Selenium, Dissolved	7782-49-2	0.0136		0.0100	0.00500	
Thallium, Dissolved	7440-28-0	0.0101		0.00200	0.000500	J,13

J The analyte was positively identified, but the quantitation was below the RL
U Not detected at or above adjusted sample detection limit

KEMRON ENVIRONMENTAL SERVICES

Report Number: L0709261
Report Date : September 26, 2007

Sample Number: L0709261-07
Client ID: LHSMW14-090707
Matrix: Water
Workgroup Number: WG250211
Collect Date: 09/10/2007 13:30
Sample Tag: DL01

PrePrep Method: NONE
Prep Method: 3015
Analytical Method: 6020
Analyst: JYH
Dilution: 10
Units: mg/L

Instrument: ELAN-ICP
Prep Date: 09/14/2007 08:30
Cal Date: 09/17/2007 10:39
Run Date: 09/17/2007 12:57
File ID: EL.091707.125749

Analyte	CAS. Number	Result	Qual	PQL	SQL	
Silver, Total	7440-22-4		U	0.0100	0.00250	
Arsenic, Total	7440-38-2		U	0.0100	0.00250	UJ,13
Barium, Total	7440-39-3	0.0449		0.0300	0.00500	
Cadmium, Total	7440-43-9		U	0.00500	0.00125	
Chromium, Total	7440-47-3	0.0627		0.0200	0.00500	
Copper, Total	7440-50-8		U	0.0200	0.00500	UJ,13
Lead, Total	7439-92-1		U	0.00500	0.00250	
Manganese, Total	7439-96-5	0.0237		0.0200	0.00500	
Nickel, Total	7440-02-0	0.0135	J	0.0400	0.0100	J,15
Antimony, Total	7440-36-0		U	0.0100	0.00250	
Selenium, Total	7782-49-2		U	0.0100	0.00500	UJ,13
Thallium, Total	7440-28-0		U	0.00200	0.000500	UJ,13

U Not detected at or above adjusted sample detection limit
J The analyte was positively identified, but the quantitation was below the RL

KEMRON ENVIRONMENTAL SERVICES

Report Number: L0709261
Report Date : September 26, 2007

Sample Number: L0709261-08
Client ID: LHSMW14-090707
Matrix: Water
Workgroup Number: WG250414
Collect Date: 09/10/2007 13:30
Sample Tag: DL01

PrePrep Method: NONE
Prep Method: 3015
Analytical Method: 6020
Analyst: JYH
Dilution: 10
Units: mg/L

Instrument: ELAN-ICP
Prep Date: 09/18/2007 10:00
Cal Date: 09/19/2007 10:07
Run Date: 09/19/2007 11:53
File ID: EL.091907.115304

Analyte	CAS. Number	Result	Qual	PQL	SQL	
Silver, Dissolved	7440-22-4		U	0.0100	0.00250	
Arsenic, Dissolved	7440-38-2		U	0.0100	0.00250	
Barium, Dissolved	7440-39-3	0.0114	J	0.0300	0.00500	J,13,15 ✓
Cadmium, Dissolved	7440-43-9		U	0.00500	0.00125	
Chromium, Dissolved	7440-47-3	0.00526	J	0.0200	0.00500	J,13,15 ✓
Copper, Dissolved	7440-50-8		U	0.0200	0.00500	
Lead, Dissolved	7439-92-1		U	0.00500	0.00250	
Manganese, Dissolved	7439-96-5	0.0150	J	0.0200	0.00500	J,13,15 ✓
Nickel, Dissolved	7440-02-0	0.0174	J	0.0400	0.0100	J,13,15 ✓
Antimony, Dissolved	7440-36-0		U	0.0100	0.00250	
Selenium, Dissolved	7782-49-2		U	0.0100	0.00500	
Thallium, Dissolved	7440-28-0	0.00428		0.00200	0.000500	J,13 ✓

U Not detected at or above adjusted sample detection limit
J The analyte was positively identified, but the quantitation was below the RL

KEMRON ENVIRONMENTAL SERVICES

Report Number: L0709261
Report Date : September 26, 2007

Sample Number: L0709261-09
Client ID: LHSMW15-090707
Matrix: Water
Workgroup Number: WG250211
Collect Date: 09/10/2007 15:45
Sample Tag: DL01

PrePrep Method: NONE
Prep Method: 3015
Analytical Method: 6020
Analyst: JYH
Dilution: 10
Units: mg/L

Instrument: ELAN-ICP
Prep Date: 09/14/2007 08:30
Cal Date: 09/17/2007 10:39
Run Date: 09/17/2007 13:04
File ID: EL.091707.130422

Analyte	CAS. Number	Result	Qual	PQL	SQL	
Silver, Total	7440-22-4		U	0.0100	0.00250	
Arsenic, Total	7440-38-2	0.00620	J	0.0100	0.00250	J, 13, 15 ✓
Barium, Total	7440-39-3	0.0174	J	0.0300	0.00500	J, 15 ✓
Cadmium, Total	7440-43-9	0.00193	J	0.00500	0.00125	J, 15 ✓
Chromium, Total	7440-47-3	0.902		0.0200	0.00500	
Copper, Total	7440-50-8	0.0464		0.0200	0.00500	J, 13 ✓
Lead, Total	7439-92-1		U	0.00500	0.00250	
Manganese, Total	7439-96-5	0.186		0.0200	0.00500	
Nickel, Total	7440-02-0	0.626		0.0400	0.0100	
Antimony, Total	7440-36-0		U	0.0100	0.00250	
Selenium, Total	7782-49-2	0.0227		0.0100	0.00500	J, 13 ✓
Thallium, Total	7440-28-0	0.00492		0.00200	0.000500	J, 13 ✓

J The analyte was positively identified, but the quantitation was below the RL
U Not detected at or above adjusted sample detection limit

KEMRON ENVIRONMENTAL SERVICES

Report Number: L0709261
Report Date : September 26, 2007

Sample Number: L0709261-10
Client ID: LHSMW15-090707
Matrix: Water
Workgroup Number: WG250414
Collect Date: 09/10/2007 15:45
Sample Tag: DL01

PrePrep Method: NONE
Prep Method: 3015
Analytical Method: 6020
Analyst: JYH
Dilution: 10
Units: mg/L

Instrument: ELAN-ICP
Prep Date: 09/18/2007 10:00
Cal Date: 09/19/2007 10:07
Run Date: 09/19/2007 12:26
File ID: EL.091907.122605

Analyte	CAS. Number	Result	Qual	PQL	SQL	
Silver, Dissolved	7440-22-4		U	0.0100	0.00250	
Arsenic, Dissolved	7440-38-2	0.00618	J	0.0100	0.00250	J,15
Barium, Dissolved	7440-39-3	0.0267	J	0.0300	0.00500	J,13,15
Cadmium, Dissolved	7440-43-9		U	0.00500	0.00125	
Chromium, Dissolved	7440-47-3	0.0576		0.0200	0.00500	J,15
Copper, Dissolved	7440-50-8	0.0169	J	0.0200	0.00500	
Lead, Dissolved	7439-92-1		U	0.00500	0.00250	
Manganese, Dissolved	7439-96-5	0.0937		0.0200	0.00500	J,13
Nickel, Dissolved	7440-02-0	0.602		0.0400	0.0100	J,13
Antimony, Dissolved	7440-36-0		U	0.0100	0.00250	
Selenium, Dissolved	7782-49-2	0.0208		0.0100	0.00500	
Thallium, Dissolved	7440-28-0	0.00621		0.00200	0.000500	J,13

J The analyte was positively identified, but the quantitation was below the RL
U Not detected at or above adjusted sample detection limit

KEMRON ENVIRONMENTAL SERVICES

Report Number: L0709261
Report Date : September 26, 2007

Sample Number: L0709261-11
Client ID: LHSMW19-090707
Matrix: Water
Workgroup Number: WG250211
Collect Date: 09/11/2007 08:20
Sample Tag: DL01

PrePrep Method: NONE
Prep Method: 3015
Analytical Method: 6020
Analyst: JYH
Dilution: 10
Units: mg/L

Instrument: ELAN-ICP
Prep Date: 09/14/2007 08:30
Cal Date: 09/17/2007 10:39
Run Date: 09/17/2007 13:10
File ID: EL.091707.131054

Analyte	CAS. Number	Result	Qual	PQL	SQL	
Silver, Total	7440-22-4		U	0.0100	0.00250	
Arsenic, Total	7440-38-2		U	0.0100	0.00250	UJ, 13
Barium, Total	7440-39-3	0.0316		0.0300	0.00500	
Cadmium, Total	7440-43-9		U	0.00500	0.00125	
Chromium, Total	7440-47-3	0.0164	J	0.0200	0.00500	J, 15
Copper, Total	7440-50-8		U	0.0200	0.00500	~~J, 13~~ UJ, 13
Lead, Total	7439-92-1		U	0.00500	0.00250	
Manganese, Total	7439-96-5	0.0635		0.0200	0.00500	
Nickel, Total	7440-02-0	0.0758		0.0400	0.0100	
Antimony, Total	7440-36-0		U	0.0100	0.00250	
Selenium, Total	7782-49-2		U	0.0100	0.00500	UJ, 13
Thallium, Total	7440-28-0	0.00194	J	0.00200	0.000500	J, 13, 15

U Not detected at or above adjusted sample detection limit
J The analyte was positively identified, but the quantitation was below the RL

KEMRON ENVIRONMENTAL SERVICES

Report Number: L0709261
Report Date : September 26, 2007

Sample Number: L0709261-12
Client ID: LHSMW19-090707
Matrix: Water
Workgroup Number: WG250414
Collect Date: 09/11/2007 08:20
Sample Tag: DL01

PrePrep Method: NONE
Prep Method: 3015
Analytical Method: 6020
Analyst: JYH
Dilution: 10
Units: mg/L

Instrument: ELAN-ICP
Prep Date: 09/18/2007 10:00
Cal Date: 09/19/2007 10:07
Run Date: 09/19/2007 12:32
File ID: EL.091907.123238

Analyte	CAS. Number	Result	Qual	PQL	SQL	
Silver, Dissolved	7440-22-4		U	0.0100	0.00250	
Arsenic, Dissolved	7440-38-2		U	0.0100	0.00250	
Barium, Dissolved	7440-39-3	0.0301		0.0300	0.00500	J,13✓
Cadmium, Dissolved	7440-43-9		U	0.00500	0.00125	
Chromium, Dissolved	7440-47-3		U	0.0200	0.00500	UJ,13
Copper, Dissolved	7440-50-8		U	0.0200	0.00500	
Lead, Dissolved	7439-92-1		U	0.00500	0.00250	
Manganese, Dissolved	7439-96-5	0.0474		0.0200	0.00500	J,13✓
Nickel, Dissolved	7440-02-0	0.0704		0.0400	0.0100	J,13✓
Antimony, Dissolved	7440-36-0		U	0.0100	0.00250	
Selenium, Dissolved	7782-49-2		U	0.0100	0.00500	
Thallium, Dissolved	7440-28-0	0.00334		0.00200	0.000500	J,13✓

U Not detected at or above adjusted sample detection limit

KEMRON ENVIRONMENTAL SERVICES

Report Number: L0709261
Report Date : September 26, 2007

Sample Number: L0709261-13
Client ID: LHSMW22-090707
Matrix: Water
Workgroup Number: WG250211
Collect Date: 09/11/2007 09:50
Sample Tag: DL01

PrePrep Method: NONE
Prep Method: 3015
Analytical Method: 6020
Analyst: JYH
Dilution: 10
Units: mg/L

Instrument: ELAN-ICP
Prep Date: 09/14/2007 08:30
Cal Date: 09/17/2007 10:39
Run Date: 09/17/2007 13:17
File ID: EL.091707.131725

Analyte	CAS. Number	Result	Qual	PQL	SQL	
Silver, Total	7440-22-4		U	0.0100	0.00250	
Arsenic, Total	7440-38-2	0.00485	J	0.0100	0.00250	J,13,15
Barium, Total	7440-39-3	0.0166	J	0.0300	0.00500	J,15
Cadmium, Total	7440-43-9	0.00391	J	0.00500	0.00125	J,15
Chromium, Total	7440-47-3	0.0316		0.0200	0.00500	
Copper, Total	7440-50-8	0.0462		0.0200	0.00500	J,13
Lead, Total	7439-92-1		U	0.00500	0.00250	
Antimony, Total	7440-36-0		U	0.0100	0.00250	
Selenium, Total	7782-49-2	0.0177		0.0100	0.00500	J,13
Thallium, Total	7440-28-0	0.00561		0.00200	0.000500	J,13

J The analyte was positively identified, but the quantitation was below the RL
U Not detected at or above adjusted sample detection limit

KEMRON ENVIRONMENTAL SERVICES

Report Number: L0709261
Report Date : September 26, 2007

Sample Number: L0709261-13
Client ID: LHSMW22-090707
Matrix: Water
Workgroup Number: WG250211
Collect Date: 09/11/2007 09:50
Sample Tag: DL02

PrePrep Method: NONE
Prep Method: 3015
Analytical Method: 6020
Analyst: JYH
Dilution: 100
Units: mg/L

Instrument: ELAN-ICP
Prep Date: 09/14/2007 08:30
Cal Date: 09/17/2007 10:39
Run Date: 09/17/2007 15:03
File ID: EL.091707.150303

Analyte	CAS. Number	Result	Qual	PQL	SQL
Manganese, Total	7439-96-5	3.79		0.200	0.0500
Nickel, Total	7440-02-0	3.49		0.400	0.100

KEMRON ENVIRONMENTAL SERVICES

Report Number: L0709261
Report Date : September 26, 2007

Sample Number: L0709261-14
Client ID: LHSMW22-090707
Matrix: Water
Workgroup Number: WG250414
Collect Date: 09/11/2007 09:50
Sample Tag: DL01

PrePrep Method: NONE
Prep Method: 3015
Analytical Method: 6020
Analyst: JYH
Dilution: 10
Units: mg/L

Instrument: ELAN-ICP
Prep Date: 09/18/2007 10:00
Cal Date: 09/19/2007 10:07
Run Date: 09/19/2007 12:39
File ID: EL.091907.123910

Analyte	CAS. Number	Result	Qual	PQL	SQL	
Silver, Dissolved	7440-22-4		U	0.0100	0.00250	
Arsenic, Dissolved	7440-38-2	0.00680	J	0.0100	0.00250	J,15 ✓
Barium, Dissolved	7440-39-3	0.0268	J	0.0300	0.00500	J,13,15 ✓
Cadmium, Dissolved	7440-43-9	0.00239	J	0.00500	0.00125	J,15 ✓
Chromium, Dissolved	7440-47-3	0.0122	J	0.0200	0.00500	J,13,15 ✓
Copper, Dissolved	7440-50-8	0.0491		0.0200	0.00500	
Lead, Dissolved	7439-92-1		U	0.00500	0.00250	
Antimony, Dissolved	7440-36-0		U	0.0100	0.00250	
Selenium, Dissolved	7782-49-2	0.0257		0.0100	0.00500	
Thallium, Dissolved	7440-28-0	0.00623		0.00200	0.000500	J,13 ✓

J The analyte was positively identified, but the quantitation was below the RL
U Not detected at or above adjusted sample detection limit

KEMRON ENVIRONMENTAL SERVICES

Report Number: L0709261
Report Date : September 26, 2007

Sample Number: L0709261-14
Client ID: LHSMW22-090707
Matrix: Water
Workgroup Number: WG250414
Collect Date: 09/11/2007 09:50
Sample Tag: DL02

PrePrep Method: NONE
Prep Method: 3015
Analytical Method: 6020
Analyst: JYH
Dilution: 100
Units: mg/L

Instrument: ELAN-ICP
Prep Date: 09/18/2007 10:00
Cal Date: 09/19/2007 10:07
Run Date: 09/19/2007 13:11
File ID: EL.091907.131146

Analyte	CAS. Number	Result	Qual	PQL	SQL	
Manganese, Dissolved	7439-96-5	3.62		0.200	0.0500	J, B
Nickel, Dissolved	7440-02-0	3.67		0.400	0.100	J, B

KEMRON ENVIRONMENTAL SERVICES

Report Number: L0709261
Report Date : September 26, 2007

Sample Number: L0709261-15
Client ID: LHSMW23-090707
Matrix: Water
Workgroup Number: WG250211
Collect Date: 09/11/2007 13:35
Sample Tag: DL01

PrePrep Method: NONE
Prep Method: 3015
Analytical Method: 6020
Analyst: JYH
Dilution: 10
Units: mg/L

Instrument: ELAN-ICP
Prep Date: 09/14/2007 08:30
Cal Date: 09/17/2007 10:39
Run Date: 09/17/2007 13:23
File ID: EL.091707.132356

Analyte	CAS. Number	Result	Qual	PQL	SQL	
Silver, Total	7440-22-4		U	0.0100	0.00250	
Arsenic, Total	7440-38-2	0.00405	J	0.0100	0.00250	J,13,15 ✓
Barium, Total	7440-39-3	0.0229	J	0.0300	0.00500	J,15 ✓
Cadmium, Total	7440-43-9		U	0.00500	0.00125	
Chromium, Total	7440-47-3	0.923		0.0200	0.00500	
Copper, Total	7440-50-8	0.00640	J	0.0200	0.00500	J,13,15 ✓
Lead, Total	7439-92-1		U	0.00500	0.00250	
Manganese, Total	7439-96-5	1.59		0.0200	0.00500	
Nickel, Total	7440-02-0	0.0604		0.0400	0.0100	
Antimony, Total	7440-36-0		U	0.0100	0.00250	
Selenium, Total	7782-49-2	0.0166		0.0100	0.00500	J,13 ✓
Thallium, Total	7440-28-0	0.00504		0.00200	0.000500	J,13 ✓

J The analyte was positively identified, but the quantitation was below the RL
U Not detected at or above adjusted sample detection limit

KEMRON ENVIRONMENTAL SERVICES

Report Number: L0709261
Report Date : September 26, 2007

Sample Number: L0709261-16
Client ID: LHSMW23-090707
Matrix: Water
Workgroup Number: WG250414
Collect Date: 09/11/2007 13:35
Sample Tag: DL01

PrePrep Method: NONE
Prep Method: 3015
Analytical Method: 6020
Analyst: JYH
Dilution: 10
Units: mg/L

Instrument: ELAN-ICP
Prep Date: 09/18/2007 10:00
Cal Date: 09/19/2007 10:07
Run Date: 09/19/2007 12:45
File ID: EL.091907.124541

Analyte	CAS. Number	Result	Qual	PQL	SQL	
Silver, Dissolved	7440-22-4		U	0.0100	0.00250	J,15 ✓
Arsenic, Dissolved	7440-38-2	0.00522	J	0.0100	0.00250	J,13 ✓
Barium, Dissolved	7440-39-3	0.0302		0.0300	0.00500	
Cadmium, Dissolved	7440-43-9		U	0.00500	0.00125	J,13,15 ✓
Chromium, Dissolved	7440-47-3	0.0197	J	0.0200	0.00500	
Copper, Dissolved	7440-50-8		U	0.0200	0.00500	
Lead, Dissolved	7439-92-1		U	0.00500	0.00250	J,13 ✓
Manganese, Dissolved	7439-96-5	1.36		0.0200	0.00500	J,13 ✓
Nickel, Dissolved	7440-02-0	0.0521		0.0400	0.0100	
Antimony, Dissolved	7440-36-0		U	0.0100	0.00250	
Selenium, Dissolved	7782-49-2	0.0223		0.0100	0.00500	J,13 ✓
Thallium, Dissolved	7440-28-0	0.00557		0.00200	0.000500	

J The analyte was positively identified, but the quantitation was below the RL
U Not detected at or above adjusted sample detection limit

KEMRON ENVIRONMENTAL SERVICES

Report Number: L0709261
Report Date : September 26, 2007

Sample Number: L0709261-17
Client ID: LHSMW24-090707
Matrix: Water
Workgroup Number: WG250211
Collect Date: 09/11/2007 15:35
Sample Tag: DL01

PrePrep Method: NONE
Prep Method: 3015
Analytical Method: 6020
Analyst: JYH
Dilution: 10
Units: mg/L

Instrument: ELAN-ICP
Prep Date: 09/14/2007 08:30
Cal Date: 09/17/2007 10:39
Run Date: 09/17/2007 13:30
File ID: EL.091707.133027

Analyte	CAS. Number	Result	Qual	PQL	SQL	
Silver, Total	7440-22-4		U	0.0100	0.00250	
Arsenic, Total	7440-38-2	0.00569	J	0.0100	0.00250	J,13,15✓
Barium, Total	7440-39-3	0.0325		0.0300	0.00500	
Cadmium, Total	7440-43-9		U	0.00500	0.00125	
Chromium, Total	7440-47-3	0.0582		0.0200	0.00500	
Copper, Total	7440-50-8	0.0104	J	0.0200	0.00500	J,13,15✓
Lead, Total	7439-92-1		U	0.00500	0.00250	
Manganese, Total	7439-96-5	0.153		0.0200	0.00500	
Nickel, Total	7440-02-0	0.0644		0.0400	0.0100	
Antimony, Total	7440-36-0		U	0.0100	0.00250	
Selenium, Total	7782-49-2	0.0264		0.0100	0.00500	J,13✓
Thallium, Total	7440-28-0	0.00529		0.00200	0.000500	J,13✓

J The analyte was positively identified, but the quantitation was below the RL
U Not detected at or above adjusted sample detection limit

KEMRON ENVIRONMENTAL SERVICES

Report Number: L0709261
Report Date : September 26, 2007

Sample Number: L0709261-18
Client ID: LHSMW24-090707
Matrix: Water
Workgroup Number: WG250414
Collect Date: 09/11/2007 15:35
Sample Tag: DL01

PrePrep Method: NONE
Prep Method: 3015
Analytical Method: 6020
Analyst: JYH
Dilution: 10
Units: mg/L

Instrument: ELAN-ICP
Prep Date: 09/18/2007 10:00
Cal Date: 09/19/2007 10:07
Run Date: 09/19/2007 12:52
File ID: EL.091907.125212

Analyte	CAS. Number	Result	Qual	PQL	SQL	
Silver, Dissolved	7440-22-4		U	0.0100	0.00250	
Arsenic, Dissolved	7440-38-2	0.00759	J	0.0100	0.00250	J,15✓
Barium, Dissolved	7440-39-3	0.0369		0.0300	0.00500	J,13✓
Cadmium, Dissolved	7440-43-9		U	0.00500	0.00125	
Chromium, Dissolved	7440-47-3	0.0152	J	0.0200	0.00500	J,13,15✓
Copper, Dissolved	7440-50-8	0.00798	J	0.0200	0.00500	J,15✓
Lead, Dissolved	7439-92-1		U	0.00500	0.00250	
Manganese, Dissolved	7439-96-5	0.128		0.0200	0.00500	J,13✓
Nickel, Dissolved	7440-02-0	0.0944		0.0400	0.0100	J,13✓
Antimony, Dissolved	7440-36-0		U	0.0100	0.00250	
Selenium, Dissolved	7782-49-2	0.0270		0.0100	0.00500	
Thallium, Dissolved	7440-28-0	0.00543		0.00200	0.000500	J,13✓

J The analyte was positively identified, but the quantitation was below the RL
U Not detected at or above adjusted sample detection limit

KEMRON ENVIRONMENTAL SERVICES

Report Number: L0709261
Report Date : September 26, 2007

Sample Number: L0709261-19
Client ID: LHSMW24-090707-FD
Matrix: Water
Workgroup Number: WG250211
Collect Date: 09/11/2007 15:35
Sample Tag: DL01

PrePrep Method: NONE
Prep Method: 3015
Analytical Method: 6020
Analyst: JYH
Dilution: 10
Units: mg/L

Instrument: ELAN-ICP
Prep Date: 09/14/2007 08:30
Cal Date: 09/17/2007 10:39
Run Date: 09/17/2007 13:36
File ID: EL.091707.133659

Analyte	CAS. Number	Result	Qual	PQL	SQL	
Silver, Total	7440-22-4		U	0.0100	0.00250	
Arsenic, Total	7440-38-2	0.00871	J	0.0100	0.00250	J,13,15
Barium, Total	7440-39-3	0.0300		0.0300	0.00500	
Cadmium, Total	7440-43-9		U	0.00500	0.00125	
Chromium, Total	7440-47-3	0.0542		0.0200	0.00500	
Copper, Total	7440-50-8	0.00989	J	0.0200	0.00500	J,13,15
Lead, Total	7439-92-1		U	0.00500	0.00250	
Manganese, Total	7439-96-5	0.128		0.0200	0.00500	
Nickel, Total	7440-02-0	0.0584		0.0400	0.0100	
Antimony, Total	7440-36-0		U	0.0100	0.00250	
Selenium, Total	7782-49-2	0.0340		0.0100	0.00500	J,13
Thallium, Total	7440-28-0	0.00522		0.00200	0.000500	U,13

J The analyte was positively identified, but the quantitation was below the RL
U Not detected at or above adjusted sample detection limit

KEMRON ENVIRONMENTAL SERVICES

Report Number: L0709261
Report Date : September 26, 2007

Sample Number: L0709261-20
Client ID: LHSMW24-090707-FD
Matrix: Water
Workgroup Number: WG250414
Collect Date: 09/11/2007 15:35
Sample Tag: DL01

PrePrep Method: NONE
Prep Method: 3015
Analytical Method: 6020
Analyst: JYH
Dilution: 10
Units: mg/L

Instrument: ELAN-ICP
Prep Date: 09/18/2007 10:00
Cal Date: 09/19/2007 10:07
Run Date: 09/19/2007 12:58
File ID: EL.091907.125843

Analyte	CAS. Number	Result	Qual	PQL	SQL	
Silver, Dissolved	7440-22-4		U	0.0100	0.00250	
Arsenic, Dissolved	7440-38-2	0.00608	J	0.0100	0.00250	J,15
Barium, Dissolved	7440-39-3	0.0372		0.0300	0.00500	J,13
Cadmium, Dissolved	7440-43-9		U	0.00500	0.00125	
Chromium, Dissolved	7440-47-3	0.0153	J	0.0200	0.00500	J,13,15
Copper, Dissolved	7440-50-8	0.00727	J	0.0200	0.00500	J,15
Lead, Dissolved	7439-92-1		U	0.00500	0.00250	
Manganese, Dissolved	7439-96-5	0.133		0.0200	0.00500	J,13
Nickel, Dissolved	7440-02-0	0.0690		0.0400	0.0100	J,13
Antimony, Dissolved	7440-36-0		U	0.0100	0.00250	
Selenium, Dissolved	7782-49-2	0.0202		0.0100	0.00500	
Thallium, Dissolved	7440-28-0	0.00518		0.00200	0.000500	J,13

J The analyte was positively identified, but the quantitation was below the RL
U Not detected at or above adjusted sample detection limit

KEMRON ENVIRONMENTAL SERVICES

Report Number: L0709261
Report Date : September 26, 2007

Sample Number: L0709261-21
Client ID: PRSB01 (9-10)
Matrix: Soil
Workgroup Number: WG250151
Collect Date: 09/07/2007 00:00
Sample Tag: 01

PrePrep Method: NONE
Prep Method: 3051
Analytical Method: 6020
Analyst: JYH
Dilution: 1
Units: mg/kg

Instrument: ELAN-ICP
Prep Date: 09/14/2007 09:30
Cal Date: 09/14/2007 10:00
Run Date: 09/14/2007 15:18
File ID: EL.091407.151815
Percent Solid: 72.7

Analyte	CAS. Number	Result	Qual	PQL	SQL
Lead, Total	7439-92-1	11.4		0.275	0.137

KEMRON ENVIRONMENTAL SERVICES

Report Number: L0709261
Report Date : September 26, 2007

Sample Number: L0709261-22
Client ID: PRSB01 (14-15)
Matrix: Soil
Workgroup Number: WG250151
Collect Date: 09/07/2007 00:00
Sample Tag: 01

PrePrep Method: NONE
Prep Method: 3051
Analytical Method: 6020
Analyst: JYH
Dilution: 1
Units: mg/kg

Instrument: ELAN-ICP
Prep Date: 09/14/2007 09:30
Cal Date: 09/14/2007 10:00
Run Date: 09/14/2007 15:24
File ID: EL.091407.152448
Percent Solid: 78.2

Analyte	CAS. Number	Result	Qual	PQL	SQL
Lead, Total	7439-92-1	11.1		0.256	0.128

KEMRON ENVIRONMENTAL SERVICES

Report Number: L0709261
Report Date : September 26, 2007

Sample Number: L0709261-23
Client ID: PRSB01 (19-20)
Matrix: Soil
Workgroup Number: WG250151
Collect Date: 09/07/2007 00:00
Sample Tag: 01

PrePrep Method: NONE
Prep Method: 3051
Analytical Method: 6020
Analyst: JYH
Dilution: 1
Units: mg/kg

Instrument: ELAN-ICP
Prep Date: 09/14/2007 09:30
Cal Date: 09/14/2007 10:00
Run Date: 09/14/2007 15:31
File ID: EL.091407.153121
Percent Solid: 79.1

Analyte	CAS. Number	Result	Qual	PQL	SQL
Lead, Total	7439-92-1	7.59		0.250	0.125

KEMRON ENVIRONMENTAL SERVICES

Report Number: L0709261
Report Date : September 26, 2007

Sample Number: L0709261-01
Client ID: 46WW02-090707
Matrix: Water
Workgroup Number: WG250149
Collect Date: 09/07/2007 08:30
Sample Tag: 01

PrePrep Method: NONE
Prep Method: METHOD
Analytical Method: 7470A
Analyst: ED
Dilution: 1
Units: mg/L

Instrument: HYDRA
Prep Date: 09/14/2007 08:30
Cal Date: 09/17/2007 09:25
Run Date: 09/17/2007 09:49
File ID: HY.091707.094919

Analyte	CAS. Number	Result	Qual	PQL	SQL
Mercury	7439-97-6		U	0.000200	0.000100

U Not detected at or above adjusted sample detection limit

KEMRON ENVIRONMENTAL SERVICES

Report Number: L0709261
Report Date : September 26, 2007

Sample Number: L0709261-02
Client ID: 46WW02-090707
Matrix: Water
Workgroup Number: WG250283
Collect Date: 09/07/2007 08:30
Sample Tag: 01

PrePrep Method: NONE
Prep Method: METHOD
Analytical Method: 7470A
Analyst: ED
Dilution: 1
Units: mg/L

Instrument: HYDRA
Prep Date: 09/17/2007 09:10
Cal Date: 09/18/2007 10:46
Run Date: 09/18/2007 11:04
File ID: HY.091807.110447

Analyte	CAS. Number	Result	Qual	PQL	SQL
Mercury, Dissolved	7439-97-6		U	0.000200	0.000100

U Not detected at or above adjusted sample detection limit

KEMRON ENVIRONMENTAL SERVICES

Report Number: L0709261
Report Date : September 26, 2007

Sample Number: L0709261-03
Client ID: 46WW04-090707
Matrix: Water
Workgroup Number: WG250149
Collect Date: 09/07/2007 10:10
Sample Tag: 01

PrePrep Method: NONE
Prep Method: METHOD
Analytical Method: 7470A
Analyst: ED
Dilution: 1
Units: mg/L

Instrument: HYDRA
Prep Date: 09/14/2007 08:30
Cal Date: 09/17/2007 09:25
Run Date: 09/17/2007 09:52
File ID: HY.091707.095229

Analyte	CAS. Number	Result	Qual	PQL	SQL
Mercury	7439-97-6		U	0.000200	0.000100

U Not detected at or above adjusted sample detection limit

KEMRON ENVIRONMENTAL SERVICES

Report Number: L0709261
Report Date : September 26, 2007

Sample Number: L0709261-04
Client ID: 46WW04-090707
Matrix: Water
Workgroup Number: WG250283
Collect Date: 09/07/2007 10:10
Sample Tag: 01

PrePrep Method: NONE
Prep Method: METHOD
Analytical Method: 7470A
Analyst: ED
Dilution: 1
Units: mg/L

Instrument: HYDRA
Prep Date: 09/17/2007 09:10
Cal Date: 09/18/2007 10:46
Run Date: 09/18/2007 11:10
File ID: HY.091807.111047

Analyte	CAS. Number	Result	Qual	PQL	SQL
Mercury, Dissolved	7439-97-6		U	0.000200	0.000100

U Not detected at or above adjusted sample detection limit

KEMRON ENVIRONMENTAL SERVICES

Report Number: L0709261
Report Date : September 26, 2007

Sample Number: L0709261-05
Client ID: LHSMW11-090707
Matrix: Water
Workgroup Number: WG250149
Collect Date: 09/07/2007 12:20
Sample Tag: 01

PrePrep Method: NONE
Prep Method: METHOD
Analytical Method: 7470A
Analyst: ED
Dilution: 1
Units: mg/L

Instrument: HYDRA
Prep Date: 09/14/2007 08:30
Cal Date: 09/17/2007 09:25
Run Date: 09/17/2007 09:54
File ID: HY.091707.095406

Analyte	CAS. Number	Result	Qual	PQL	SQL
Mercury	7439-97-6		U	0.000200	0.000100

U Not detected at or above adjusted sample detection limit

KEMRON ENVIRONMENTAL SERVICES

Report Number: L0709261
Report Date : September 26, 2007

Sample Number: L0709261-06
Client ID: LHSMW11-090707
Matrix: Water
Workgroup Number: WG250283
Collect Date: 09/07/2007 12:20
Sample Tag: 01

PrePrep Method: NONE
Prep Method: METHOD
Analytical Method: 7470A
Analyst: ED
Dilution: 1
Units: mg/L

Instrument: HYDRA
Prep Date: 09/17/2007 09:10
Cal Date: 09/18/2007 10:46
Run Date: 09/18/2007 11:16
File ID: HY.091807.111645

Analyte	CAS. Number	Result	Qual	PQL	SQL
Mercury, Dissolved	7439-97-6		U	0.000200	0.000100

U Not detected at or above adjusted sample detection limit

KEMRON ENVIRONMENTAL SERVICES

Report Number: L0709261
Report Date : September 26, 2007

Sample Number: L0709261-07
Client ID: LHSMW14-090707
Matrix: Water
Workgroup Number: WG250149
Collect Date: 09/10/2007 13:30
Sample Tag: 01

PrePrep Method: NONE
Prep Method: METHOD
Analytical Method: 7470A
Analyst: ED
Dilution: 1
Units: mg/L

Instrument: HYDRA
Prep Date: 09/14/2007 08:30
Cal Date: 09/17/2007 09:25
Run Date: 09/17/2007 09:55
File ID: HY.091707.095543

Analyte	CAS. Number	Result	Qual	PQL	SQL
Mercury	7439-97-6		U	0.000200	0.000100

U Not detected at or above adjusted sample detection limit

KEMRON ENVIRONMENTAL SERVICES

Report Number: L0709261
Report Date : September 26, 2007

Sample Number: L0709261-08
Client ID: LHSMW14-090707
Matrix: Water
Workgroup Number: WG250283
Collect Date: 09/10/2007 13:30
Sample Tag: 01

PrePrep Method: NONE
Prep Method: METHOD
Analytical Method: 7470A
Analyst: ED
Dilution: 1
Units: mg/L

Instrument: HYDRA
Prep Date: 09/17/2007 09:10
Cal Date: 09/18/2007 10:46
Run Date: 09/18/2007 11:18
File ID: HY.091807.111834

Analyte	CAS. Number	Result	Qual	PQL	SQL
Mercury, Dissolved	7439-97-6		U	0.000200	0.000100

U Not detected at or above adjusted sample detection limit

KEMRON ENVIRONMENTAL SERVICES

Report Number: L0709261
Report Date : September 26, 2007

Sample Number: L0709261-09
Client ID: LHSMW15-090707
Matrix: Water
Workgroup Number: WG250149
Collect Date: 09/10/2007 15:45
Sample Tag: 01

PrePrep Method: NONE
Prep Method: METHOD
Analytical Method: 7470A
Analyst: RD
Dilution: 1
Units: mg/L

Instrument: HYDRA
Prep Date: 09/14/2007 08:30
Cal Date: 09/17/2007 09:25
Run Date: 09/17/2007 09:57
File ID: HY.091707.095732

Analyte	CAS. Number	Result	Qual	PQL	SQL
Mercury	7439-97-6	0.000193	J	0.000200	0.000100

J,15

J The analyte was positively identified, but the quantitation was below the RL

KEMRON ENVIRONMENTAL SERVICES

Report Number: L0709261
Report Date : September 26, 2007

Sample Number: L0709261-10
Client ID: LHSMW15-090707
Matrix: Water
Workgroup Number: WG250283
Collect Date: 09/10/2007 15:45
Sample Tag: 01

PrePrep Method: NONE
Prep Method: METHOD
Analytical Method: 7470A
Analyst: ED
Dilution: 1
Units: mg/L

Instrument: HYDRA
Prep Date: 09/17/2007 09:10
Cal Date: 09/18/2007 10:46
Run Date: 09/18/2007 11:20
File ID: HY.091807.112032

Analyte	CAS. Number	Result	Qual	PQL	SQL
Mercury, Dissolved	7439-97-6	0.000165	J	0.000200	0.000100

0.15 /

J The analyte was positively identified, but the quantitation was below the RL

KEMRON ENVIRONMENTAL SERVICES

Report Number: L0709261
Report Date : September 26, 2007

Sample Number: L0709261-11
Client ID: LHSMW19-090707
Matrix: Water
Workgroup Number: WG250149
Collect Date: 09/11/2007 08:20
Sample Tag: 01

PrePrep Method: NONE
Prep Method: METHOD
Analytical Method: 7470A
Analyst: ED
Dilution: 1
Units: mg/L

Instrument: HYDRA
Prep Date: 09/14/2007 08:30
Cal Date: 09/17/2007 09:25
Run Date: 09/17/2007 09:59
File ID: HY.091707.095928

Analyte	CAS. Number	Result	Qual	PQL	SQL
Mercury	7439-97-6		U	0.000200	0.000100

U Not detected at or above adjusted sample detection limit

KEMRON ENVIRONMENTAL SERVICES

Report Number: L0709261
Report Date : September 26, 2007

Sample Number: L0709261-12
Client ID: LHSMW19-090707
Matrix: Water
Workgroup Number: WG250283
Collect Date: 09/11/2007 08:20
Sample Tag: 01

PrePrep Method: NONE
Prep Method: METHOD
Analytical Method: 7470A
Analyst: ED
Dilution: 1
Units: mg/L

Instrument: HYDRA
Prep Date: 09/17/2007 09:10
Cal Date: 09/18/2007 10:46
Run Date: 09/18/2007 11:27
File ID: HY.091807.112717

Analyte	CAS. Number	Result	Qual	PQL	SQL
Mercury, Dissolved	7439-97-6		U	0.000200	0.000100

U Not detected at or above adjusted sample detection limit

KEMRON ENVIRONMENTAL SERVICES

Report Number: L0709261
Report Date : September 26, 2007

Sample Number: L0709261-13
Client ID: LHSMW22-090707
Matrix: Water
Workgroup Number: WG250149
Collect Date: 09/11/2007 09:50
Sample Tag: 01

PrePrep Method: NONE
Prep Method: METHOD
Analytical Method: 7470A
Analyst: ED
Dilution: 1
Units: mg/L

Instrument: HYDRA
Prep Date: 09/14/2007 08:30
Cal Date: 09/17/2007 09:25
Run Date: 09/17/2007 10:01
File ID: HY.091707.100117

Analyte	CAS. Number	Result	Qual	PQL	SQL
Mercury	7439-97-6		U	0.000200	0.000100

U Not detected at or above adjusted sample detection limit

KEMRON ENVIRONMENTAL SERVICES

Report Number: L0709261
Report Date : September 26, 2007

Sample Number: L0709261-14
Client ID: LHSMW22-090707
Matrix: Water
Workgroup Number: WG250283
Collect Date: 09/11/2007 09:50
Sample Tag: 01

PrePrep Method: NONE
Prep Method: METHOD
Analytical Method: 7470A
Analyst: ED
Dilution: 1
Units: mg/L

Instrument: HYDRA
Prep Date: 09/17/2007 09:10
Cal Date: 09/18/2007 10:46
Run Date: 09/18/2007 11:29
File ID: HY.091807.112910

Analyte	CAS. Number	Result	Qual	PQL	SQL
Mercury, Dissolved	7439-97-6		U	0.000200	0.000100

U Not detected at or above adjusted sample detection limit

KEMRON ENVIRONMENTAL SERVICES

Report Number: L0709261
Report Date : September 26, 2007

Sample Number: L0709261-15
Client ID: LHSMW23-090707
Matrix: Water
Workgroup Number: WG250149
Collect Date: 09/11/2007 13:35
Sample Tag: 01

PrePrep Method: NONE
Prep Method: METHOD
Analytical Method: 7470A
Analyst: ED
Dilution: 1
Units: mg/L

Instrument: HYDRA
Prep Date: 09/14/2007 08:30
Cal Date: 09/17/2007 09:25
Run Date: 09/17/2007 10:06
File ID: HY.091707.100631

Analyte	CAS. Number	Result	Qual	PQL	SQL
Mercury	7439-97-6		U	0.000200	0.000100

U Not detected at or above adjusted sample detection limit

KEMRON ENVIRONMENTAL SERVICES

Report Number: L0709261
Report Date : September 26, 2007

Sample Number: L0709261-16
Client ID: LHSMW23-090707
Matrix: Water
Workgroup Number: WG250283
Collect Date: 09/11/2007 13:35
Sample Tag: 01

PrePrep Method: NONE
Prep Method: METHOD
Analytical Method: 7470A
Analyst: ED
Dilution: 1
Units: mg/L

Instrument: HYDRA
Prep Date: 09/17/2007 09:10
Cal Date: 09/18/2007 10:46
Run Date: 09/18/2007 11:31
File ID: HY.091807.113149

Analyte	CAS. Number	Result	Qual	PQL	SQL
Mercury, Dissolved	7439-97-6		U	0.000200	0.000100

U Not detected at or above adjusted sample detection limit

KEMRON ENVIRONMENTAL SERVICES

Report Number: L0709261
Report Date : September 26, 2007

Sample Number: L0709261-17
Client ID: LHSMW24-090707
Matrix: Water
Workgroup Number: WG250149
Collect Date: 09/11/2007 15:35
Sample Tag: 01

PrePrep Method: NONE
Prep Method: METHOD
Analytical Method: 7470A
Analyst: ED
Dilution: 1
Units: mg/L

Instrument: HYDRA
Prep Date: 09/14/2007 08:30
Cal Date: 09/17/2007 09:25
Run Date: 09/17/2007 10:08
File ID: HY.091707.100808

Analyte	CAS. Number	Result	Qual	PQL	SQL
Mercury	7439-97-6	0.00146		0.000200	0.000100

KEMRON ENVIRONMENTAL SERVICES

Report Number: L0709261
Report Date : September 26, 2007

Sample Number: L0709261-18
Client ID: LHSMW24-090707
Matrix: Water
Workgroup Number: WG250283
Collect Date: 09/11/2007 15:35
Sample Tag: 01

PrePrep Method: NONE
Prep Method: METHOD
Analytical Method: 7470A
Analyst: ED
Dilution: 1
Units: mg/L

Instrument: HYDRA
Prep Date: 09/17/2007 09:10
Cal Date: 09/18/2007 10:46
Run Date: 09/18/2007 11:33
File ID: HY.091807.113326

Analyte	CAS. Number	Result	Qual	PQL	SQL
Mercury, Dissolved	7439-97-6	0.00115		0.000200	0.000100

KEMRON ENVIRONMENTAL SERVICES

Report Number: L0709261
Report Date : September 26, 2007

Sample Number: L0709261-19
Client ID: LHSMW24-090707-FD
Matrix: Water
Workgroup Number: WG250149
Collect Date: 09/11/2007 15:35
Sample Tag: 01

PrePrep Method: NONE
Prep Method: METHOD
Analytical Method: 7470A
Analyst: ED
Dilution: 1
Units: mg/L

Instrument: HYDRA
Prep Date: 09/14/2007 08:30
Cal Date: 09/17/2007 09:25
Run Date: 09/17/2007 10:09
File ID: HY.091707.100957

Analyte	CAS. Number	Result	Qual	PQL	SQL
Mercury	7439-97-6	0.00142		0.000200	0.000100

KEMRON ENVIRONMENTAL SERVICES

Report Number: L0709261
Report Date : September 26, 2007

Sample Number: L0709261-20
Client ID: LHSMW24-090707-FD
Matrix: Water
Workgroup Number: WG250283
Collect Date: 09/11/2007 15:35
Sample Tag: 01

PrePrep Method: NONE
Prep Method: METHOD
Analytical Method: 7470A
Analyst: ED
Dilution: 1
Units: mg/L

Instrument: HYDRA
Prep Date: 09/17/2007 09:10
Cal Date: 09/18/2007 10:46
Run Date: 09/18/2007 11:35
File ID: HY.091807.113515

Analyte	CAS. Number	Result	Qual	PQL	SQL
Mercury, Dissolved	7439-97-6	0.000988		0.000200	0.000100

KEMRON ENVIRONMENTAL SERVICES

Report Number: L0709261
Report Date : September 26, 2007

Sample Number: L0709261-01
Client ID: 46WW02-090707
Matrix: Water
Workgroup Number: WG250079
Collect Date: 09/07/2007 08:30

PrePrep Method: NONE
Prep Method: 160.1
Analytical Method: 160.1
Analyst: TMM
Dilution: 1
Units: mg/L

Instrument: OVEN
Prep Date: 09/14/2007 08:20
Cal Date:
Run Date: 09/14/2007 08:20
File ID: EN.0709140820-04

Analyte	CAS. Number	Result	Qual	PQL	SQL
Total Dissolved Solids		372		20.0	10.0

KEMRON ENVIRONMENTAL SERVICES

Report Number: L0709261
Report Date : September 26, 2007

Sample Number: L0709261-03
Client ID: 46WW04-090707
Matrix: Water
Workgroup Number: WG250079
Collect Date: 09/07/2007 10:10

PrePrep Method: NONE
Prep Method: 160.1
Analytical Method: 160.1
Analyst: TMM
Dilution: 1
Units: mg/L

Instrument: OVEN
Prep Date: 09/14/2007 08:20
Cal Date:
Run Date: 09/14/2007 08:20
File ID: EN.0709140820-10

Analyte	CAS. Number	Result	Qual	PQL	SQL
Total Dissolved Solids		2760		20.0	10.0

KEMRON ENVIRONMENTAL SERVICES

Report Number: L0709261
Report Date : September 26, 2007

Sample Number: L0709261-05
Client ID: LHSMW11-090707
Matrix: Water
Workgroup Number: WG250079
Collect Date: 09/07/2007 12:20

PrePrep Method: NONE
Prep Method: 160.1
Analytical Method: 160.1
Analyst: TMM
Dilution: 1
Units: mg/L

Instrument: OVEN
Prep Date: 09/14/2007 08:20
Cal Date:
Run Date: 09/14/2007 08:20
File ID: EN.0709140820-05

Analyte	CAS. Number	Result	Qual	PQL	SQL
Total Dissolved Solids		2990		20.0	10.0

KEMRON ENVIRONMENTAL SERVICES

Report Number: L0709261
Report Date : September 26, 2007

Sample Number: L0709261-07
Client ID: LHSMW14-090707
Matrix: Water
Workgroup Number: WG250079
Collect Date: 09/10/2007 13:30

PrePrep Method: NONE
Prep Method: 160.1
Analytical Method: 160.1
Analyst: TMM
Dilution: 1
Units: mg/L

Instrument: OVEN
Prep Date: 09/14/2007 08:20
Cal Date:
Run Date: 09/14/2007 08:20
File ID: EN.0709140820-08

Analyte	CAS. Number	Result	Qual	PQL	SQL
Total Dissolved Solids		122		20.0	10.0

KEMRON ENVIRONMENTAL SERVICES

Report Number: L0709261
Report Date : September 26, 2007

Sample Number: L0709261-09
Client ID: LHSMW15-090707
Matrix: Water
Workgroup Number: WG250079
Collect Date: 09/10/2007 15:45

PrePrep Method: NONE
Prep Method: 160.1
Analytical Method: 160.1
Analyst: TMM
Dilution: 1
Units: mg/L

Instrument: OVEN
Prep Date: 09/14/2007 08:20
Cal Date:
Run Date: 09/14/2007 08:20
File ID: EN.0709140820-07

Analyte	CAS. Number	Result	Qual	PQL	SQL
Total Dissolved Solids		3830		20.0	10.0

KEMRON ENVIRONMENTAL SERVICES

Report Number: L0709261
Report Date : September 26, 2007

Sample Number: L0709261-11
Client ID: LHSMW19-090707
Matrix: Water
Workgroup Number: WG250079
Collect Date: 09/11/2007 08:20

PrePrep Method: NONE
Prep Method: 160.1
Analytical Method: 160.1
Analyst: TMM
Dilution: 1
Units: mg/L

Instrument: OVEN
Prep Date: 09/14/2007 08:20
Cal Date:
Run Date: 09/14/2007 08:20
File ID: EN.0709140820-12

Analyte	CAS. Number	Result	Qual	PQL	SQL
Total Dissolved Solids		870		20.0	10.0

KEMRON ENVIRONMENTAL SERVICES

Report Number: L0709261
Report Date : September 26, 2007

Sample Number: L0709261-13
Client ID: LHSMW22-090707
Matrix: Water
Workgroup Number: WG250079
Collect Date: 09/11/2007 09:50

PrePrep Method: NONE
Prep Method: 160.1
Analytical Method: 160.1
Analyst: TMM
Dilution: 1
Units: mg/L

Instrument: OVEN
Prep Date: 09/14/2007 08:20
Cal Date:
Run Date: 09/14/2007 08:20
File ID: EN.0709140820-13

Analyte	CAS. Number	Result	Qual	PQL	SQL
Total Dissolved Solids		3760		20.0	10.0

KEMRON ENVIRONMENTAL SERVICES

Report Number: L0709261
Report Date : September 26, 2007

Sample Number: L0709261-15
Client ID: LHSMW23-090707
Matrix: Water
Workgroup Number: WG250079
Collect Date: 09/11/2007 13:35

PrePrep Method: NONE
Prep Method: 160.1
Analytical Method: 160.1
Analyst: TMM
Dilution: 1
Units: mg/L

Instrument: OVEN
Prep Date: 09/14/2007 08:20
Cal Date:
Run Date: 09/14/2007 08:20
File ID: EN.0709140820-14

Analyte	CAS. Number	Result	Qual	PQL	SQL
Total Dissolved Solids		3280		20.0	10.0

KEMRON ENVIRONMENTAL SERVICES

Report Number: L0709261
Report Date : September 26, 2007

Sample Number: L0709261-17
Client ID: LHSMW24-090707
Matrix: Water
Workgroup Number: WG250079
Collect Date: 09/11/2007 15:35

PrePrep Method: NONE
Prep Method: 160.1
Analytical Method: 160.1
Analyst: TMM
Dilution: 1
Units: mg/L

Instrument: OVEN
Prep Date: 09/14/2007 08:20
Cal Date:
Run Date: 09/14/2007 08:20
File ID: EN.0709140820-15

Analyte	CAS. Number	Result	Qual	PQL	SQL
Total Dissolved Solids		3990		20.0	10.0

KEMRON ENVIRONMENTAL SERVICES

Report Number: L0709261
Report Date : September 26, 2007

Sample Number: L0709261-19
Client ID: LHSMW24-090707-FD
Matrix: Water
Workgroup Number: WG250079
Collect Date: 09/11/2007 15:35

PrePrep Method: NONE
Prep Method: 160.1
Analytical Method: 160.1
Analyst: TMM
Dilution: 1
Units: mg/L

Instrument: OVEN
Prep Date: 09/14/2007 08:20
Cal Date:
Run Date: 09/14/2007 08:20
File ID: EN.0709140820-16

Analyte	CAS. Number	Result	Qual	PQL	SQL
Total Dissolved Solids		3980		20.0	10.0

KEMRON ENVIRONMENTAL SERVICES

Report Number: L0709261
Report Date : September 26, 2007

Sample Number: L0709261-01
Client ID: 46WW02-090707
Matrix: Water
Workgroup Number: WG250078
Collect Date: 09/07/2007 08:30

PrePrep Method: NONE
Prep Method: 160.2
Analytical Method: 160.2
Analyst: TMM
Dilution: 1
Units: mg/L

Instrument: OVEN
Prep Date: 09/14/2007 08:00
Cal Date:
Run Date: 09/14/2007 08:00
File ID: EN.0709140800-04

Analyte	CAS. Number	Result	Qual	PQL	SQL
Total Suspended Solids		4.50	J	5.00	2.50

J,15 ✓

J The analyte was positively identified, but the quantitation was below the RL

KEMRON ENVIRONMENTAL SERVICES

Report Number: L0709261
Report Date : September 26, 2007

Sample Number: L0709261-03
Client ID: 46WW04-090707
Matrix: Water
Workgroup Number: WG250078
Collect Date: 09/07/2007 10:10

PrePrep Method: NONE
Prep Method: 160.2
Analytical Method: 160.2
Analyst: TMM
Dilution: 1
Units: mg/L

Instrument: OVEN
Prep Date: 09/14/2007 08:00
Cal Date:
Run Date: 09/14/2007 08:00
File ID: EN.0709140800-05

Analyte	CAS. Number	Result	Qual	PQL	SQL
Total Suspended Solids		13.0		5.00	2.50

KEMRON ENVIRONMENTAL SERVICES

Report Number: L0709261
Report Date : September 26, 2007

Sample Number: L0709261-05
Client ID: LHSMW11-090707
Matrix: Water
Workgroup Number: WG250078
Collect Date: 09/07/2007 12:20

PrePrep Method: NONE
Prep Method: 160.2
Analytical Method: 160.2
Analyst: TMM
Dilution: 1
Units: mg/L

Instrument: OVEN
Prep Date: 09/14/2007 08:00
Cal Date:
Run Date: 09/14/2007 08:00
File ID: EN.0709140800-06

Analyte	CAS. Number	Result	Qual	PQL	SQL
Total Suspended Solids		25.5		5.00	2.50

KEMRON ENVIRONMENTAL SERVICES

Report Number: L0709261
Report Date : September 26, 2007

Sample Number: L0709261-07
Client ID: LHSMW14-090707
Matrix: Water
Workgroup Number: WG250078
Collect Date: 09/10/2007 13:30

PrePrep Method: NONE
Prep Method: 160.2
Analytical Method: 160.2
Analyst: TMM
Dilution: 1
Units: mg/L

Instrument: OVEN
Prep Date: 09/14/2007 08:00
Cal Date:
Run Date: 09/14/2007 08:00
File ID: EN.0709140800-07

Analyte	CAS. Number	Result	Qual	PQL	SQL
Total Suspended Solids		23.5		5.00	2.50

KEMRON ENVIRONMENTAL SERVICES

Report Number: L0709261
Report Date : September 26, 2007

Sample Number: L0709261-09
Client ID: LHSMW15-090707
Matrix: Water
Workgroup Number: WG250078
Collect Date: 09/10/2007 15:45

PrePrep Method: NONE
Prep Method: 160.2
Analytical Method: 160.2
Analyst: TMM
Dilution: 1
Units: mg/L

Instrument: OVEN
Prep Date: 09/14/2007 08:00
Cal Date:
Run Date: 09/14/2007 08:00
File ID: EN.0709140800-08

Analyte	CAS. Number	Result	Qual	PQL	SQL
Total Suspended Solids		6.50		5.00	2.50

KEMRON ENVIRONMENTAL SERVICES

Report Number: L0709261
Report Date : September 26, 2007

Sample Number: L0709261-11
Client ID: LHSMW19-090707
Matrix: Water
Workgroup Number: WG250078
Collect Date: 09/11/2007 08:20

PrePrep Method: NONE
Prep Method: 160.2
Analytical Method: 160.2
Analyst: TMM
Dilution: 1
Units: mg/L

Instrument: OVEN
Prep Date: 09/14/2007 08:00
Cal Date:
Run Date: 09/14/2007 08:00
File ID: EN.0709140800-09

Analyte	CAS. Number	Result	Qual	PQL	SQL
Total Suspended Solids		9.50		5.00	2.50

KEMRON ENVIRONMENTAL SERVICES

Report Number: L0709261
Report Date : September 26, 2007

Sample Number: L0709261-13
Client ID: LHSMW22-090707
Matrix: Water
Workgroup Number: WG250078
Collect Date: 09/11/2007 09:50

PrePrep Method: NONE
Prep Method: 160.2
Analytical Method: 160.2
Analyst: TMM
Dilution: 1
Units: mg/L

Instrument: OVEN
Prep Date: 09/14/2007 08:00
Cal Date:
Run Date: 09/14/2007 08:00
File ID: EN.0709140800-10

Analyte	CAS. Number	Result	Qual	PQL	SQL
Total Suspended Solids			U	5.00	2.50

U Not detected at or above adjusted sample detection limit

KEMRON ENVIRONMENTAL SERVICES

Report Number: L0709261
Report Date : September 26, 2007

Sample Number: L0709261-15
Client ID: LHSMW23-090707
Matrix: Water
Workgroup Number: WG250078
Collect Date: 09/11/2007 13:35

PrePrep Method: NONE
Prep Method: 160.2
Analytical Method: 160.2
Analyst: TMM
Dilution: 1
Units: mg/L

Instrument: OVEN
Prep Date: 09/14/2007 08:00
Cal Date:
Run Date: 09/14/2007 08:00
File ID: EN.0709140800-11

Analyte	CAS. Number	Result	Qual	PQL	SQL
Total Suspended Solids		13.5		5.00	2.50

KEMRON ENVIRONMENTAL SERVICES

Report Number: L0709261
Report Date : September 26, 2007

Sample Number: L0709261-17
Client ID: LHSMW24-090707
Matrix: Water
Workgroup Number: WG250078
Collect Date: 09/11/2007 15:35

PrePrep Method: NONE
Prep Method: 160.2
Analytical Method: 160.2
Analyst: TMM
Dilution: 1
Units: mg/L

Instrument: OVEN
Prep Date: 09/14/2007 08:00
Cal Date:
Run Date: 09/14/2007 08:00
File ID: EN.0709140800-12

Analyte	CAS. Number	Result	Qual	PQL	SQL
Total Suspended Solids		5.00		5.00	2.50

KEMRON ENVIRONMENTAL SERVICES

Report Number: L0709261
Report Date : September 26, 2007

Sample Number: L0709261-19
Client ID: LHSMW24-090707-FD
Matrix: Water
Workgroup Number: WG250078
Collect Date: 09/11/2007 15:35

PrePrep Method: NONE
Prep Method: 160.2
Analytical Method: 160.2
Analyst: TMM
Dilution: 1
Units: mg/L

Instrument: OVEN
Prep Date: 09/14/2007 08:00
Cal Date:
Run Date: 09/14/2007 08:00
File ID: EN.0709140800-13

Analyte	CAS. Number	Result	Qual	PQL	SQL
Total Suspended Solids		6.00		5.00	2.50

00078063

Shaw™
Shaw E & I, Inc.

Sample Collection Log

117591 - Longhorn Army Ammunition Plant

Manager: Praveen Srivastav

RFA / COC Number: 10914 | 10915

Location Code: 46WW02
Sample Number: 46WW02- FEB 07
Sample Name: 46WW02-GW-46WW02- -REG
Sampling Method: SP
Sample Type: GW *Sample Purpose:* REG
Sampling Equip: QED BLADDER PUMP

Task: MNA_EVENT_FEB07
Collection Date: 2/20/07
Collection Time: 0934
Start Depth: 31.31
End Depth: 31.70
Sample Matrix: WATER
Sample Team: JCB|MM

QC Partners:
(TB) ~~[illegible]~~ TB-02 (ER) N/A (FB) N/A

Containers

Analytical Suite	Flt	Frtn	Qty	Size	Units	Type
VOC-FULL	N	A	3	40	mL	VOA VIAL
ANIONS	N	B	1	~~500~~ 1000	mL	HDPE
PERC	N	C	1	500	mL	HDPE
GASES	N	D	3	40	mL	VOA Vial
ALKALINITY	N	E	1	~~100~~ 500	mL	HDPE
TOC_415	N	F	3	~~100~~ 40	mL	HDPE
DHC	N	G	2	1	L	Amb. Glass
SULFIDES	N	H	1	500	mL	HDPE

ERPIMS Values:
Sacode:
Lot Control#:

Groundwater Information:
Measured Well Depth: 47.29 **Depth To Water:** 31.49

Comments: FERROUS IRON: 1.34
Salinity: 0.37

Sketch Location:

Logged BY / Date: J. Rh 2/20/07 *Reviewed BY / Date:*

Shaw™
Shaw E & I, Inc.

Sample Collection Log

117591 - Longhorn Army Ammunition Plant
Manager: Praveen Srivastav

Location Code: **46WW02**
Sample Number: **46WW02-** FEB 2007

PURGE RECORD:

Initial	Time(24hr)	DepthtoWater (ft)	Eh (mV)	pH (SU)	Conductivity (mS/cm)	Turbidity (NTU)	DissOxygen (ppm)	Temperature (C)	Purge Volume (gal)
Sample:	0959	31.70	2724	4.59	0.750	26	0.97	19.29	12.2

2/20/07 JCB

Logged BY / Date: J. Rue 2/20/07 *Reviewed BY / Date:* _____

00078065

GROUNDWATER SAMPLING FORM

Sheet 1 of 2

Operable Unit/Site ID: Area 46
Project Name/#: Longhorn AAP / 117591
Weather: O/C ≈ 35°-65°F

Sampling location ID: 46 WW02
Sample ID: 46 WW02- FEB 2007
Collection Time/Date: 02-20-07 / 0934

Pump Installation

Pump installation crew: M. Martinez / J. Belcourt
PID/FID reading (well head/background): 0.0
Casing diameter (inches): 4" / Stainless Steel
Total well Depth (ft. BTOC): 47.29
Initial (pre-installation) DTW/time: 31.49' / 1336
Final (after pump priming) DTW/time: 31.55 / 0903
Free product (circle): LNAPL / DNAPL
Volume of water removed during priming (mL): 1000
Discharge tube length (ft.): 50'

Installation date/beginning time: 2/20/07 @ 0844
Installation date/completion time: 02/20/07 0844
Screen Interval (ft. BTOC): 35' to 45'
Pump intake depth (ft BTOC): 40'
Post-installation DTW/time: 31.26 @ 0847
Max. sustainable pump rate (mL/min): 280
Appearance of product: N/A
Discharge tube diameter (3/8" or 1/4"): 1/4"
Inlet reducer used (Y/N): N

Pneumatic Controller Tuning:
Initial air pressure = H (ft.) X 0.43 = 28 psi

	Initial	2	3	4	5	6	7	8	Final
Pressure (psi)	28	30							30
Refill Setting	10	10							10
Discharge Setting	5	6.5							6.5
Flow rate (mL/min)	120	280							280

Purging

Purging/sampling crew: M. Martinez / J. Belcourt
Purge date/beginning time: 02-2007 / 0850
Initial (pre-purging) DTW (ft. BTOC): 31.31
Calculated tubing + pump volume: NA

PID/FID reading (well head/background): 0.0
Purge date/completion time: 2/20/07 @ 1000
Final (post-purging) DTW (ft. BTOC): 31.70
No. of tubing + pump volumes purged: 13.2

Pneumatic Controller Tuning:
Initial air pressure = H (ft.) X 0.43 = 28 psi

	Initial	2	3	4	5	6	7	8	Final
Pressure (psi)	28	30							30
Refill Setting	10	10							10
Discharge Setting	5	6.5							6.5
Flow rate (mL/min)	120	280							280

Water Quality Parameter Measurements

Time	DTW (ft. BTOC)	Purge Rate (mL/min)	Cumulative Volume Purged (L)	Temp. (degree C)	Electrical Conductivity (uMhos/cm)	pH	Eh (mv)	DO (mg/L)	Turbidity (NTU)
0903	31.55	120	-0-	18.59	0.529	4.71	261.0	1.17	2.0
0913	31.61	120	1.2	18.75	0.549	4.60	262.8	0.67	1.1
0918	31.56	120	~~2.4~~ 1.8	18.79	0.560	4.59	263.0	0.55	0.0
0923	31.65	280	~~3.6~~ 2.4	19.10	0.585	4.60	263.2	0.47	0.1
0928	31.67	280	3.8	19.21	0.608	4.59	261.0	0.39	0.2
0933	31.68	280	5.2	19.23	0.618	4.59	261.0	0.38	~~0.3~~ 0.3
0934			Sample time						
			JLB 2-20-07						

00078066

GROUNDWATER SAMPLING FORM

Sheet 2 of 2

Water Quality Parameter Measurements (continued)

Time	DTW (ft. BTOC)	Purge Rate (mL/min)	Cumulative Volume Purged (L)	Temp. (degree C) ±10%	Electrical Conductivity (uMhos/cm) ±3%	pH ±0.1	Eh (mv) ±10	DO (mg/L) ±10%	Turbidity (NTU) ±10%

10-esp 20

DLB 2/20/07

Sampling

Sampling beginning time: 0934 Sampling completion time: 0955

Water Quality Parameter Measurements

Time	DTW (ft. BTOC)	Purge Rate (mL/min)	Cumulative Volume Purged (L)	Temp. (degree C)	Electrical Conductivity (uMhos/cm)	pH	Eh (mv)	DO (mg/L)	Turbidity (NTU)
0959	31.70	280	12.2	19.29	0.750	4.59	272.4	0.97	2.6

Sample Information

Sample ID: 46WW02

Sample collection date/time: 0934 / 2/20/07

Duplicate sample collected (Y/N): N

Duplicate sample ID: N/A

Split sample collected (Y/N): N

Split sample ID: N/A

COC No(s): 10914 / 10915

Requested Analysis	Method	Containers	Requested Analysis	Method	Containers
VOC'S-Full	8260	3 VOAS	Perchlorate	314.0	1-500 mL HDPE
Anions	300	1-1000mL HDPE	Sulfides	376.2	1-500 mL HDPE
Gasses	175	3 VOAS	DHC		2-Liter Amber
Alkalinity	310.1	1-500 mL HDPE			
TOC	415.1	3 VOAS			

Comments: Ferrous Iron - 1.34
Salinity - 0.37

Abbreviations: BTOC - Below top of casing; DTW - Depth to water; H - head above pump intake; mL - milliliter; L - Liter

00078067

Shaw™
Shaw E & I, Inc.

Sample Collection Log

117591 - Longhorn Army Ammunition Plant

Manager: Praveen Srivastav

RFA / COC Number: LHAAP Team 2-01A / LHAAP-Team 2-01B

Location Code: **46WW01**

Sample Number: **46WW01-** FEB 2007

Sample Name: **46WW01-GW-46WW01- -REG**

Sampling Method: **SP**

Sample Type: **GW** *Sample Purpose:* **REG**

Sampling Equip: QED Bladder Pump

Task: **MNA_EVENT_FEB07**

Collection Date: 02-19-07

Collection Time: 1456

Start Depth: (MSW) ~~26.90'~~ 22.00'

End Depth: 23.40'

Sample Matrix: **WATER**

Sample Team: M. Martinez / J. Belcourt

QC Partners:

(TB) N/A (ER) N/A (FB) N/A

ERPIMS Values:

Sacode:

Lot Control#:

Containers

Analytical Suite	Flt	Frtn	Qty	Size	Units	Type
VOC-FULL	N	A	3	40	mL	VOA VIAL
ANIONS	N	B	1	~~500~~ 125	mL	HDPE
PERC	N	C	1	500	mL	HDPE
GASES	N	D	3	40	mL	VOA Vial
ALKALINITY	N	E	1	~~100~~ 500	mL	HDPE
TOC 415	N	F	3	~~100~~ 40	mL	~~HDPE~~ VOA VIAL
DHC	N	G	2	1	L	Amb. Glass
Sulfides	N	H	1	500	mL	HDPE

Groundwater Information:

Measured Well Depth: 26.90' **Depth To Water:** 22.00

Comments: Ferrous Iron 0.02 mg/L
Salinity 0.00

Sketch Location:

Logged BY / Date: M. Martinez / 02-19-07 *Reviewed BY / Date:*

Shaw™
Shaw E & I, Inc.

Sample Collection Log

117591 - Longhorn Army Ammunition Plant

Manager: Praveen Srivastav

Location Code: **46WW01**
Sample Number: **46WW01-** FEB 2007

PURGE RECORD:

Initial	Time(24hr)	DepthtoWater (ft)	Eh (mV)	pH (SU)	Conductivity (mS/cm)	Turbidity (NTU)	DissOxygen (ppm)	Temperature (C)	Purge Volume (gal)
Sample:	1545	23.40	371.4	5.27 ~~5.26~~ MW	0.138 ~~0.141~~ AC	15.0	1.87	19.30	3.5

MW 2-19-07

Logged BY / Date: M. Martinez / 02-19-07 *Reviewed BY / Date:* _____

00078069

GROUNDWATER SAMPLING FORM

Sheet 1 of 2

Operable Unit/Site ID: Area 46
Project Name/#: Longhorn AAP / 117591
Weather: O/C ≈ 71°F

Sampling location ID: Site 46 MW01
Sample ID: 46GW01
Collection Time/Date: 02-19-07 / 1450

Pump Installation

Pump installation crew: M. Martinez / J. Belcourt
PID/FID reading (well head/background): 0.0
Casing diameter (inches): 4" / Stainless Steel
Total well Depth (ft. BTOC): 26.90
Initial (pre-installation) DTW/time: 22.66 / 1253
Final (after pump priming) DTW/time: 22.81 / 1400
Free product (circle): LNAPL / DNAPL
Volume of water removed during priming (mL): 1000
Discharge tube length (ft.): 35'

Installation date/beginning time: 02/19/07 / 1334
Installation date/completion time: 02/19/07 / 1335
Screen Interval (ft. BTOC): 14' to 24'
Pump intake depth (ft BTOC): 25.90'
Post-installation DTW/time: 22.68' / ~~1255~~ 1335
Max. sustainable pump rate (mL/min): 120
Appearance of product: N/A
Discharge tube diameter (3/8" or 1/4"): 1/4"
Inlet reducer used (Y/N): N

Pneumatic Controller Tuning:
Initial air pressure = H (ft.) X 0.43 = 18 psi

	Initial	2	3	4	5	6	7	8	Final
Pressure (psi)	18								
Refill Setting	10								
Discharge Setting	5								
Flow rate (mL/min)	120								

Purging

Purging/sampling crew: M. Martinez / J. Belcourt
Purge date/beginning time: 02/19/07 / 1352
Initial (pre-purging) DTW (ft. BTOC): 22.62
Calculated tubing + pump volume: NA

PID/FID reading (well head/background): 0.0
Purge date/completion time: 02/19/07 1545
Final (post-purging) DTW (ft. BTOC): 23.40
No. of tubing + pump volumes purged: 13.6 Liters

Pneumatic Controller Tuning:
Initial air pressure = H (ft.) X 0.43 = 18 psi

	Initial	2	3	4	5	6	7	8	Final
Pressure (psi)	18								18
Refill Setting	10								10
Discharge Setting	5								5
Flow rate (mL/min)	120								120

Water Quality Parameter Measurements

Time	DTW (ft. BTOC)	Purge Rate (mL/min)	Cumulative Volume Purged (L)	Temp. (degree C)	Electrical Conductivity (uMhos/cm)	pH	Eh (mv)	DO (mg/L)	Turbidity (NTU)
1400	22.81	120	0	20.66	0.147	5.47	346.9	3.94	103.0
1405	22.85	120	.6	20.98	0.145	5.36	355.6	3.62	82.0
1410	22.88	120	1.2	20.77	0.144	5.33	359.6	3.42	57.4
1415	22.92	120	1.8	20.56	0.144	5.33	360.4	3.25	57.8
1420	22.94	120	2.4	20.44	0.143	5.35	359.7	3.02	41.0
1425	22.98	120	3.0	20.36	0.143	5.19	370.0	2.95	38.4
1430	22.98	120	3.6	20.09	0.143	5.18	374.2	2.91	35.8
1435	23.00	120	4.2	19.58	0.142	5.10	382.0	2.89	31.9

00078070

GROUNDWATER SAMPLING FORM

Sheet 2 of 2

46WW01

Water Quality Parameter Measurements (continued)

Time	DTW (ft. BTOC)	Purge Rate (mL/min)	Cumulative Volume Purged (L)	Temp. (degree C) ±10%	Electrical Conductivity (uMhos/cm) ±3%	pH ±0.1	Eh (mv) ±10	DO (mg/L) ±10%	Turbidity (NTU) ±10%
1440	23.03	120	4.8	19.29	0.141	5.12	382.2	2.79	29.0
1445	23.05	120	5.4	19.28	0.141	5.15	379.9	2.77	27.3
1450	23.50	120	6.0	19.52	0.141	5.25	371.4	2.71	27.0
1455	23.50	120	6.6	19.54	0.141	5.26	371.4	2.67	25.2
1456	Sample								

10-esp 20

Sampling

Sampling beginning time: 1456 Sampling completion time: 1544

Water Quality Parameter Measurements

Time	DTW (ft. BTOC)	Purge Rate (mL/min)	Cumulative Volume Purged (L)	Temp. (degree C)	Electrical Conductivity (uMhos/cm)	pH	Eh (mv)	DO (mg/L)	Turbidity (NTU)
1545	23.40	120	12.6	19.30	0.138	5.27	352.0	1.87	15.0

Sample Information

Sample ID: 46WW01-FEB 2007

Sample collection date/time: 02-19-07/1456

Duplicate sample collected (Y/N): N

Duplicate sample ID: N/A

Split sample collected (Y/N): N

Split sample ID: N/A

COC No(s): LHAAP-Team2-01A & 01B

Requested Analysis	Method	Containers	Requested Analysis	Method	Containers
VOC-Full	SW8260B	3 VOAs	Sulfides	376.2	1-500mL HDPE
Gases	RSK SOP 175	3 VOAs	Anions	300.0	1-1000mL HDPE
TOC	415.1	3 VOAs	Dehalococcoides		2-1Liter Ambers
Perchlorate	314.0	1-500mL HDPE			
Alkalinity	310.1	1-500mL HDPE			

Comments: Ferrous Iron 0.02 mg/L

Salinity 0.06

Abbreviations: BTOC - Below top of casing; DTW - Depth to water; H - head above pump intake; mL - milliliter; L - Liter

00078071

Shaw™
Shaw E & I, Inc.

Sample Collection Log

117591 - Longhorn Army Ammunition Plant

Manager: Praveen Srivastav

RFA / COC Number: LHAAP-Team1-01A

Location Code: 46WW04

Sample Number: 46WW04-Feb2007

Sample Name: 46WW04-GW-46WW04- -REG

Sampling Method: SP

Sample Type: GW *Sample Purpose:* REG

Sampling Equip: Stainless Steel Bladder Pump

QC Partners:

(TB) (ER) (FB)

Task: MNA_EVENT_FEB07

Collection Date: 2-19-07

Collection Time: 1405

Start Depth: 21.31

End Depth: 21.24

Sample Matrix: WATER

Sample Team: Willemore / McAdoo

ERPIMS Values:

Sacode:

Lot Control#:

Containers

Analytical Suite	Flt	Frtn	Qty	Size	Units	Type
VOC-FULL	N	A	3	40	mL	VOA VIAL
ANIONS	N	B	1	500	mL	HDPE
PERC	N	C	1	500	mL	HDPE
GASES	N	D	2	40	mL	VOA Vial
ALKALINITY	N	E	1	100	mL	HDPE
TOC 415	N	F	1	100	mL	HDPE
DHC	N	G	1	1	L	Amb. Glass

Groundwater Information:

Measured Well Depth: 26.91 **Depth To Water:** 21.31

Comments:

Sketch Location:

Logged BY / Date: _____ *Reviewed BY / Date:* _____

Shaw™
Shaw E & I, Inc.

Sample Collection Log

117591 - Longhorn Army Ammunition Plant

Manager: Praveen Srivastav

Location Code: **46WW04**
Sample Number: **46WW04-Feb 2007**

PURGE RECORD:

Initial	Time(24hr)	DepthtoWater (ft)	Eh (mV)	pH (SU)	Conductivity (mS/cm)	Turbidity (NTU)	DissOxygen (ppm)	Temperature (C)	Purge Volume (gal)
Sample:	1405	21.24	191.4	6.20	5.105	11.1	0.56	1918	125

Logged BY / Date: _____ *Reviewed BY / Date:* _____

00078073

Shaw®

GROUNDWATER SAMPLING FORM

Sheet 1 of 2

Operable Unit/Site ID: LHAAP-46
Project Name/#: Longhorn Army A.P.
Weather: Sunny 70°

Sampling location ID: Site 46
Sample ID: 46WW04Feb2007
Collection Time/Date: 1405 / 2-19-07

Pump Installation

Pump installation crew: A. Willemore / S. McAd
PID/FID reading (well head/background): 0.0 / LeLo.0 (LEL)
Casing diameter (inches): 4"
Total well Depth (ft. BTOC): 26.91 / 1310
Initial (pre-installation) DTW/time: 21.31 / 1310
Final (after pump priming) DTW/time: 21.24
Free product (circle): LNAPL / DNAPL
Volume of water removed during priming (mL): —
Discharge tube length (ft.): 28'

Installation date/beginning time: 2-19-07 / 1315
Installation date/completion time: 2-19-07 / 1325
Screen Interval (ft. BTOC): 17 to 27
Pump intake depth (ft BTOC): 25'
Post-installation DTW/time: NA
Max. sustainable pump rate (mL/min): 125
Appearance of product: NA
Discharge tube diameter (3/8" or 1/4"): —
Inlet reducer used (Y/N): NA

Pneumatic Controller Tuning:
Initial air pressure = H (ft.) X 0.43 = _____ psi

	Initial	2	3	4	5	6	7	8	Final
Pressure (psi)									
Refill Setting									
Discharge Setting									
Flow rate (mL/min)									

Purging

Purging/sampling crew: A. Willemore / S. McAd
Purge date/beginning time: 2-19-07 / 1330
Initial (pre-purging) DTW (ft. BTOC): ~~25~~ 21.24
Calculated tubing + pump volume: NA

PID/FID reading (well head/background): 0.0 / 0.0
Purge date/completion time: 2-19-07 / 1405
Final (post-purging) DTW (ft. BTOC): 21.24
No. of tubing + pump volumes purged: —

Pneumatic Controller Tuning:
Initial air pressure = H (ft.) X 0.43 = NR psi

	Initial	2	3	4 (SM)	5	6	7	8	Final
Pressure (psi)	20	20	20	20	20	20	20		
Refill Setting	10	10	10	10	10	10	10		
Discharge Setting	5	5	5	5	5	5	5		
Flow rate (mL/min)	125	125	125	125	125	125	125		

Water Quality Parameter Measurements

Time	DTW (ft. BTOC)	Purge Rate (mL/min)	Cumulative Volume Purged (L)	Temp. (degree C)	Electrical Conductivity (uMhos/cm)	pH	Eh (mv)	DO (mg/L)	Turbidity (NTU)
1335	21.24	125	~~0.625~~ 0	19.60	5.172	6.2	141.2	0.89	101.1
1340	21.24	125	~~1.250~~ 0.625	19.47	5.154	6.21	149.4	0.54	75.4
1345	21.24	125	~~1.875~~ 1.250	19.47	5.134	6.20	142.1	0.48	62.7
1350	21.24	125	~~2.500~~ 1.875	19.46	5.125	6.20	134.7	0.46	52.1
1355	21.24	125	~~3.125~~ 2.500	19.50	5.125	6.20	178.7	0.45	11.7
1400	21.24	125	3.125	19.22	5.110	6.20	182.9	0.46	18.4
1405	21.24	125	3.875	19.18	5.105	6.20	191.4	0.56	11.1

SM

00078074

Shaw®

GROUNDWATER SAMPLING FORM

Sheet ___ of ___

Water Quality Parameter Measurements (continued)

Time	DTW (ft. BTOC)	Purge Rate (mL/min)	Cumulative Volume Purged (L)	Temp. (degree C) ± 10%	±3% Electrical Conductivity (uMhos/cm)	pH ± 0.1	Eh (mv) ± 10	DO (mg/L) ± 10%	Turbidity (NTU) ± 10% 10/20

Sampling

Sampling beginning time: 1405

Sampling completion time: 1405

Water Quality Parameter Measurements

Time	DTW (ft. BTOC)	Purge Rate (mL/min)	Cumulative Volume Purged (L)	Temp. (degree C)	Electrical Conductivity (uMhos/cm)	pH	Eh (mv)	DO (mg/L)	Turbidity (NTU)
1405	21.24	125	875	19.18	5.105	6.20	191.4	0.56	11.1

Sample Information

Sample ID: 46WW04

Sample collection date/time: 2-19-07

Duplicate sample collected (Y/N): ~~\~~

Duplicate sample ID: ~~\~~

Split sample collected (Y/N): ~~\~~

Split sample ID: ~~\~~

COC No(s): ~~\~~

Requested Analysis	Method	Containers	Requested Analysis	Method	Containers
VOCs	8260B		ALKALINITY		
ANIONS	300.0		TOC		
Sulfides	376.2				
Perchlorate	314.0				
GASES	SOP175				

Comments: Water is tan

Abbreviations: BTOC - Below top of casing; DTW - Depth to water; H - head above pump intake; mL - milliliter; L - Liter

Shaw™
Shaw E & I, Inc.

Sample Collection Log

117591 - Longhorn Army Ammunition Plant

Manager: Praveen Srivastav

RFA / COC Number: 10952

Location Code: LHSMW18
Sample Number: LHSMW18-Feb2007
Sample Name: LHSMW18-GW-LHSMW18- -REG
Sampling Method: SP
Sample Type: GW *Sample Purpose:* REG
Sampling Equip: Stainless Steel Bladder Pump

Task: MNA_EVENT_FEB07
Collection Date: 2-20-07
Collection Time: 1240/1630
Start Depth: 27.85'
End Depth: 23.32
Sample Matrix: WATER
Sample Team: Willemore/McAdoo

QC Partners:
(TB) (ER) (FB)

ERPIMS Values:
Sacode:
Lot Control#:

Containers

Analytical Suite	Flt	Frtn	Qty	Size	Units	Type
VOC-FULL	N	A	3	40	mL	VOA VIAL
ANIONS	N	B	1	500	mL	HDPE
PERC	N	C	1	500	mL	HDPE
GASES	N	D	2	40	mL	VOA Vial
ALKALINITY	N	E	1	100	mL	HDPE
TOC_415	N	F	1	100	mL	HDPE
DHC	N	G	1	1	L	Amb. Glass

Groundwater Information:
Measured Well Depth: 27.85' **Depth To Water:** 23.47'

Comments: Took MS + MSD

Sketch Location:

Logged BY / Date: Sherry McAdoo 2-20-07 *Reviewed BY / Date:*

Shaw™
Shaw E & I, Inc.

Sample Collection Log

117591 - Longhorn Army Ammunition Plant

Manager: Praveen Srivastav

Location Code: **LHSMW18**
Sample Number: **LHSMW18-** Feb 2007

PURGE RECORD:

Initial	Time(24hr)	DepthtoWater (ft)	Eh (mV)	pH (SU)	Conductivity (mS/cm)	Turbidity (NTU)	DissOxygen (ppm)	Temperature (C)	Purge Volume (gal)
Sample:	1240	23.32	342.8	6.02	2.980	20.1	3.49	19.57	100

Logged BY / Date: Sherry McAdoo 2-20-07

Reviewed BY / Date: _____

00078077

Shaw®

GROUNDWATER SAMPLING FORM

Sheet 1 of 2

Operable Unit/Site ID: Site 46 LHAAP
Project Name/#: Longhorn AAP
Weather: Cloudy

Sampling location ID: LHSMW 18
Sample ID: LHSMW18-Feb 2007
Collection Time/Date: 2-20-07/1240 & 1630

Pump Installation

Pump installation crew: Willemore/McFadoo
PID/FID reading (well head/background): 0.0/0.0
Casing diameter (inches): 4"
Total well Depth (ft. BTOC): 27.85'
Initial (pre-installation) DTW/time: 22.47'
Final (after pump priming) DTW/time: 2202
Free product (circle): LNAPL / DNAPL
Volume of water removed during priming (mL): NA
Discharge tube length (ft.): —

Installation date/beginning time: 2-20-07/1155
Installation date/completion time: 2-20-07/1157
Screen Interval (ft. BTOC): 17.85 to 27.85
Pump intake depth (ft BTOC): 24
Post-installation DTW/time: —
Max. sustainable pump rate (mL/min): 100
Appearance of product: NA
Discharge tube diameter (3/8" or 1/4"): NA
Inlet reducer used (Y/N): N

Pneumatic Controller Tuning:
Initial air pressure = H (ft.) X 0.43 = _____ psi

	Initial	2	3	4	5	6	7	8	Final
Pressure (psi)					SKIP				
Refill Setting									
Discharge Setting									
Flow rate (mL/min)									

Purging

Purging/sampling crew: Willemore/McFadoo
Purge date/beginning time: 2-20-07/1205
Initial (pre-purging) DTW (ft. BTOC): 22.02
Calculated tubing + pump volume: NA

PID/FID reading (well head/background): 0.0
Purge date/completion time: 2-20-07
Final (post-purging) DTW (ft. BTOC): 23.32
No. of tubing + pump volumes purged: —

Pneumatic Controller Tuning:
Initial air pressure = H (ft.) X 0.43 = NR psi

	Initial	2	3	4	5	6	7	8	Final
Pressure (psi)	18	18	18	18	18				
Refill Setting	10	10	10	10	10				
Discharge Setting	5	5	5	5	5				
Flow rate (mL/min)	100	100	100	100	100				

Water Quality Parameter Measurements

Time	DTW (ft. BTOC)	Purge Rate (mL/min)	Cumulative Volume Purged (L)	Temp. (degree C)	Electrical Conductivity (uMhos/cm)	pH	Eh (mv)	DO (mg/L)	Turbidity (NTU)
1205	22.02	100	~~10.0~~ 0	19.55	3.058	6.02	329.5	3.86	27.4
1210	23.32	100	~~25~~ 0.5	19.58	3.072	6.02	324	3.65	26.0
1215	23.32	100	~~500~~ 1.0	19.61	3.040	6.01	335.2	3.46	21.7
1220	23.32	100	~~750~~ 1.5	19.59	3.037	6.02	339.8	3.59	20.5
1225	23.32	100	~~500~~ 3.0	19.57	2.980	6.02	342.8	3.49	20.1

00078078

Shaw®

GROUNDWATER SAMPLING FORM

Sheet 2 of 2

LHSMW 18

Water Quality Parameter Measurements (continued)

Time	DTW (ft. BTOC)	Purge Rate (mL/min)	Cumulative Volume Purged (L)	Temp. (degree C) ± 10%	±3% Electrical Conductivity (uMhos/cm)	pH ± 0.1	Eh (mv) ± 10	DO (mg/L) ± 10%	Turbidity (NTU) ± 10% 10/20

SKMS

Sampling

Sampling beginning time:_____ Sampling completion time:_____

Water Quality Parameter Measurements

Time	DTW (ft. BTOC)	Purge Rate (mL/min)	Cumulative Volume Purged (L)	Temp. (degree C)	Electrical Conductivity (uMhos/cm)	pH	Eh (mv)	DO (mg/L)	Turbidity (NTU)
1240/ 1630	23.32	100	—	19.57	2.980	6.02	342.8	3.49	20.1

SKMS

Sample Information

Sample ID: LHSMW18-Feb 2007

Sample collection date/time: 2-20-07 1240/1630

Duplicate sample collected (Y/N): N

Duplicate sample ID: N

Split sample collected (Y/N): N

Split sample ID: N

COC No(s): 10952

Requested Analysis	Method	Containers	Requested Analysis	Method	Containers
Anions	300.0	6	TOC	415.1	4
Sulfides	376.2	3	VOC	8260B	6
Perchlorate	314.0	3			
Gases-CO2	SOP175	5			
Alkalinity	310.1	3			

Comments: Water had blackish-grayish Hue
Took MSDs.
Returned to complete sampling 1630 after water build up

Abbreviations: BTOC - Below top of casing; DTW - Depth to water; H - head above pump intake; mL - milliliter; L - Liter

MS/MSD

00078079

Shaw™
Shaw E & I, Inc.

Sample Collection Log

117591 - Longhorn Army Ammunition Plant

Manager: Praveen Srivastav

RFA / COC Number: 10949

Location Code: LHSMW19
Sample Number: LHSMW19- Feb 2007
Sample Name: LHSMW19-GW-LHSMW19- -REG
Sampling Method: SP
Sample Type: GW *Sample Purpose:* REG
Sampling Equip: Stainless Steel Bladder Pump

Task: MNA_EVENT_FEB07
Collection Date: 2-20-07
Collection Time: 0950
Start Depth: 30'
End Depth:
Sample Matrix: WATER
Sample Team:

QC Partners:
(TB) (ER) (FB)

ERPIMS Values:
Sacode:
Lot Control#:

Containers

Analytical Suite	Flt	Frtn	Qty	Size	Units	Type
VOC-FULL	N	A	3	40	mL	VOA VIAL
ANIONS	N	B	1	500	mL	HDPE
PERC	N	C	1	500	mL	HDPE
GASES	N	D	2	40	mL	VOA Vial
ALKALINITY	N	E	1	100	mL	HDPE
TOC_415	N	F	1	100	mL	HDPE
DHC	N	G	1	1	L	Amb. Glass

Groundwater Information:
Measured Well Depth: 30' **Depth To Water:** 20.90'

Comments:

Sketch Location:

Logged BY / Date: S Berry / M McAdoo 2-20-07

Reviewed BY / Date:

Shaw™
Shaw E & I, Inc.

Sample Collection Log

117591 - Longhorn Army Ammunition Plant

Manager: Praveen Srivastav

Site 46

Location Code: **LHSMW19**

Sample Number: **LHSMW19-Feb 2007**

PURGE RECORD:

Initial	Time(24hr)	DepthtoWater (ft)	Eh (mV)	pH (SU)	Conductivity (mS/cm)	Turbidity (NTU)	DissOxygen (ppm)	Temperature (C)	Purge Volume (gal)
Sample:	0950	25'	310.7	6.41	1.485	7.9	0.78	19.72	100

Logged BY / Date: Sherry McPadon 2-20-07 *Reviewed BY / Date:* _____

00078081

Shaw®

GROUNDWATER SAMPLING FORM

Sheet 1 of 2

Operable Unit/Site ID: Longhorn
Project Name/#: Longhorn AAP
Weather: CLOUDY

Sampling location ID: LHSMW19-Site46
Sample ID: LHSMW19-Feb 2007
Collection Time/Date: 2-20-07 / 0950

Pump Installation

Pump installation crew: Willemore / McAdoo
PID/FID reading (well head/background): 0.0 / 0.0
Casing diameter (inches): 4"
Total well Depth (ft. BTOC): 30.'
Initial (pre-installation) DTW/time: 20.90'
Final (after pump priming) DTW/time: 20.94
Free product (circle): LNAPL / DNAPL
Volume of water removed during priming (mL): —
Discharge tube length (ft.): 28'

Installation date/beginning time: 2-20-07 / 0950
Installation date/completion time: 2-20-07 0925
Screen Interval (ft. BTOC): 20 to 30
Pump intake depth (ft BTOC): 25'
Post-installation DTW/time: 20.71'
Max. sustainable pump rate (mL/min): 100
Appearance of product: None
Discharge tube diameter (3/8" or 1/4"): 3/8"
Inlet reducer used (Y/N): N

Pneumatic Controller Tuning:
Initial air pressure = H (ft.) X 0.43 = _____ psi

	Initial	2	3	4	5	6	7	8	Final
Pressure (psi)									
Refill Setting					SKMS				
Discharge Setting									
Flow rate (mL/min)									

Purging

Purging/sampling crew: Willemore / McAdoo
Purge date/beginning time: 2-20-07
Initial (pre-purging) DTW (ft. BTOC): ~~25'~~ 20.94
Calculated tubing + pump volume: NA

PID/FID reading (well head/background): 0.0 / 0.0
Purge date/completion time: 2-20-07 / 1020
Final (post-purging) DTW (ft. BTOC): 20.94
No. of tubing + pump volumes purged: —

Pneumatic Controller Tuning:
Initial air pressure = H (ft.) X 0.43 = NR psi

	Initial	2	3	4	5	6	7	8	Final
Pressure (psi)	20	20	20	20	20	20	20		
Refill Setting	10	10	10	10	10	10	10		
Discharge Setting	5	5	5	5	5	5	5		
Flow rate (mL/min)	100	100	100	100	100	100	100		

Water Quality Parameter Measurements

Time	DTW (ft. BTOC)	Purge Rate (mL/min)	Cumulative Volume Purged (L)	Temp. (degree C)	Electrical Conductivity (uMhos/cm)	pH	Eh (mv)	DO (mg/L)	Turbidity (NTU)
0920	20.94	100	~~7.0~~ 0	19.55	1.489	6.47	294.4	0.89	23.7
0925	20.94	100	~~2.5~~ 0.5	19.51	1.491	6.46	298.1	0.78	12.4
0930	20.94	100	~~3.0~~ 1.0	19.51	1.491	6.46	300.3	0.75	14.7
0935	20.94	100	~~4.0~~ 1.5	19.54	1.490	6.45	302.2	0.75	11.1
0940	20.94	100	~~5.0~~ 2.0	19.59	1.489	6.43	303.7	0.75	10.1
0945	20.94	100	~~6.0~~ 2.5	19.66	1.487	6.42	305.4	0.75	9.7

00078082

GROUNDWATER SAMPLING FORM

Sheet 2 of 2

LHSMW19

Water Quality Parameter Measurements (continued)

Time	DTW (ft. BTOC)	Purge Rate (mL/min)	Cumulative Volume Purged (L)	Temp. (degree C) ± 10%	±3% Electrical Conductivity (uMhos/cm)	pH ± 0.1	Eh (mv) ± 10	DO (mg/L) ± 10%	Turbidity (NTU) ± 10% 10/20

SKMS

Sampling

Sampling beginning time: 0950 Sampling completion time: 0950

Water Quality Parameter Measurements

Time	DTW (ft. BTOC)	Purge Rate (mL/min)	Cumulative Volume Purged (L)	Temp. (degree C)	Electrical Conductivity (uMhos/cm)	pH	Eh (mv)	DO (mg/L)	Turbidity (NTU)
0945	20.94	100	~~500~~ 2.5	19.66	1.487	6.42	305.4	0.75	9.7
1020	20.94	100	~~750~~ 3.0	19.72	1.485	6.41	310.7	0.78	7.9

Sample Information

Sample ID: LHSMW19-Feb 2007 Sample collection date/time: 2-20-07

Duplicate sample collected (Y/N): N Duplicate sample ID: N

Split sample collected (Y/N): N Split sample ID: N

COC No(s): 10949

Requested Analysis	Method	Containers	Requested Analysis	Method	Containers
VOC	8260B	3	ALKALINITY	310.1	1
ANIONS	300.0	1	TOC	415.1	3
Sulfides	376.2	1			
Perchlorate	314.0	1			
Gases-CO2	SOP 175	3			

Comments:

Abbreviations: BTOC - Below top of casing; DTW - Depth to water; H - head above pump intake; mL - milliliter; L - Liter

00078083

Shaw™
Shaw E & I, Inc.

Sample Collection Log

117591 - Longhorn Army Ammunition Plant

Manager: Praveen Srivastav

RFA / COC Number: 10934/10931

Location Code: LHSMW22
Sample Number: LHSMW22- Feb 2007
Sample Name: LHSMW22-GW-LHSMW22- -REG
Sampling Method: SP
Sample Type: GW *Sample Purpose:* REG
Sampling Equip: Bladder Pump - had to use bailer

Task: MNA_EVENT_FEB07
Collection Date: 2/19/07
Collection Time: 8:50
Start Depth: 25.21
End Depth: ~~2~~ NA
Sample Matrix: WATER
Sample Team: Allen/Wenzel

QC Partners:
(TB) (ER) (FB)

Containers

Analytical Suite	Flt	Frtn	Qty	Size	Units	Type
VOC-FULL	N	A	3	40	mL	VOA VIAL
ANIONS	N	B	3	500	mL	~~HDPE~~ VOA VIAL
PERC	N	C	1	500	mL	HDPE
GASES	N	D	3	40	mL	VOA Vial
ALKALINITY	N	E	1	~~100~~ 1000	mL	HDPE
TOC_415	N	F	3	100	mL	~~HDPE~~ VOA VIAL
DHC	N	G	2	1	L	Amb. Glass

ERPIMS Values:
Sacode:
Lot Control#:

Groundwater Information:
Measured Well Depth: 28.94 **Depth To Water:** 25.21

Comments:

Sketch Location:

Logged BY / Date: [signature]

Reviewed BY / Date:

Shaw™
Shaw E & I, Inc.

Sample Collection Log

117591 - Longhorn Army Ammunition Plant

Manager: Praveen Srivastav

Location Code: **LHSMW22**
Sample Number: **LHSMW22-**

PURGE RECORD:

Initial	Time(24hr)	DepthtoWater (ft)	Eh (mV)	pH (SU)	Conductivity (mS/cm)	Turbidity (NTU)	DissOxygen (ppm)	Temperature (C)	Purge Volume (gal)
Sample:									

Logged BY / Date: 2/20/07 *Reviewed BY / Date:* _____

00078085

GROUNDWATER SAMPLING FORM

Sheet 1 of 2

Operable Unit/Site ID:
Project Name/#: 117591
Weather: Partly cloudy 65-70°, windy

Sampling location ID: ~~LHS LH2K~~ LHSMW22
Sample ID:
Collection Time/Date: 2/19/07 12:55

Pump Installation

Pump installation crew: Alla / N Langer
PID/FID reading (well head/background): 0.0 (.1 - 2/20/07)
Casing diameter (inches): 4"
Total well Depth (ft. BTOC): 28.94 25.3
Initial (pre-installation) DTW/time: ~~25.30 25.21~~ Alla 02/19/07
Final (after pump priming) DTW/time:
Free product (circle): LNAPL / DNAPL
Volume of water removed during priming (mL): —
Discharge tube length (ft.): NA

Installation date/beginning time: 2/19/07 15:00
Installation date/completion time: 2/19/07
Screen Interval (ft. BTOC): 18.94 to 28.94
Pump intake depth (ft BTOC): 27.94
Post-installation DTW/time: 25.21
Max. sustainable pump rate (mL/min): 100
Appearance of product: Clear
Discharge tube diameter (3/8" or 1/4"): 1/4"
Inlet reducer used (Y/N): N

Pneumatic Controller Tuning:
Initial air pressure = H (ft.) X 0.43 = 20 psi

	Initial	2	3	4	5	6	7	8	Final
Pressure (psi)	20								
Refill Setting	11								
Discharge Setting	4								
Flow rate (mL/min)	160								

Purging

Purging/sampling crew: Alla / N Langer
Purge date/beginning time: 2/19/07 13:07
Initial (pre-purging) DTW (ft. BTOC): 25.21
Calculated tubing + pump volume: NA

PID/FID reading (well head/background): 0.0
Purge date/completion time: 2/19/07
Final (post-purging) DTW (ft. BTOC): Ø
No. of tubing + pump volumes purged: —

Pneumatic Controller Tuning:
Initial air pressure = H (ft.) X 0.43 = _____ psi

	Initial	2	3	4	5	6	7	8	Final
Pressure (psi)	20	20							
Refill Setting	11	12.5							
Discharge Setting	4	2.5							
Flow rate (mL/min)	160	100							

Water Quality Parameter Measurements

Time	DTW (ft. BTOC)	Purge Rate (mL/min)	Cumulative Volume Purged (L)	Temp. (degree C)	Electrical Conductivity (uMhos/cm)	pH	Eh (mv)	DO (mg/L)	Turbidity (NTU)
15:15	25.53	160	~~0.0~~ 0.0	19.43	~~8.768~~ 8.76	6.00	42.8	11.8	6.6
15:20		160	0.800	19.40	8.778	6.00	50.4	0.86	-4.6
15:25	25.85	100	1.300	19.32	8.776	6.01	60.2	1.13	-5.0
15:30	25.91	160	1.800	19.27	8.774	6.03	71.5	1.47	-5.7

Shaw®

GROUNDWATER SAMPLING FORM

LHSMW22

Water Quality Parameter Measurements (continued)

Time	DTW (ft. BTOC)	Purge Rate (mL/min)	Cumulative Volume Purged (L)	Temp. (degree C) ± 10%	±3% Electrical Conductivity (uMhos/cm)	pH ± 0.1	Eh (mv) ± 10	DO (mg/L) ± 10%	Turbidity (NTU) ± 10%

10/20

2/20/07

Sampling

Sampling beginning time: _____ Sampling completion time: _____

Water Quality Parameter Measurements

Time	DTW (ft. BTOC)	Purge Rate (mL/min)	Cumulative Volume Purged (L)	Temp. (degree C)	Electrical Conductivity (uMhos/cm)	pH	Eh (mv)	DO (mg/L)	Turbidity (NTU)
8:50	—	—	—	19.33	8.643	5.84	57.8	3.22	30.2

Sample Information

Sample ID: LHSMW22-Feb

Sample collection date/time: 8:50 02/20/07

Duplicate sample collected (Y/N): N

Duplicate sample ID: —

Split sample collected (Y/N): N

Split sample ID: —

COC No(s): _____

Requested Analysis	Method	Containers	Requested Analysis	Method	Containers
VOC	8260	3 - 40ml VOA	Sulfides	376.2	1 - 500ml
Perchlorate	EPA 314.1	1 - 500ml	Gases	RSK	3 - 40ml
TOC	415.1	3 - 40ml VOA	Dehalococoidies		2 - 1L Amber
Alkalinity	310.1	1 - 1000ml			
NO2 NO3 Cl FI	300	1 - 50ml			

Comments: - well went almost dry - water level dropped lower than 2 ft at 100 ml per minute. Bailed dry and returned to sample on 2/20/07. WL at start of bailing 26.65

Abbreviations: BTOC - Below top of casing; DTW - Depth to water; H - head above pump intake; mL - milliliter; L - Liter

FI - 3.3

Sal - 4.84

00078087

Shaw™
Shaw E & I, Inc.

Sample Collection Log

117591 - Longhorn Army Ammunition Plant

Manager: Praveen Srivastav

RFA / COC Number: LHAAP TEAM3-01A LHAAP TEAM-01B

Location Code: **LHSMW23**

Sample Number: **LHSMW23-** Feb 2007

Sample Name: **LHSMW23-GW-LHSMW23- -REG**

Sampling Method: **SP**

Sample Type: **GW** *Sample Purpose:* **REG**

Sampling Equip: Bladder Pump

QC Partners:
(TB) N/A (ER) N/A (FB) N/A

Task: **MNA_EVENT_FEB07**

Collection Date: 2/19/07

Collection Time: 13:50

Start Depth: 26.55

End Depth: 26.65

Sample Matrix: **WATER**

Sample Team: Allen/Wenger

ERPIMS Values:
Sacode:
Lot Control#:

Containers

Analytical Suite	Flt	Frtn	Qty	Size	Units	Type
VOC-FULL	N	A	3	40	mL	VOA VIAL
ANIONS	N	B	1	~~500~~ 1000	mL	HDPE
PERC	N	C	1	500	mL	HDPE
GASES	N	D	~~2~~ 3	40	mL	VOA Vial
ALKALINITY	N	E	1	~~100~~ 500	mL	HDPE
TOC_415	N	F	~~2~~ 3	100	mL	~~HDPE~~ VOA VIAL
DHC	N	G	~~2~~ 2	1	L	Amb. Glass
Sulfides	N	H	1	500		HDPE

Groundwater Information:

Measured Well Depth: 42.18 **Depth To Water:** 26.55

Comments: Ferrous Iron - 2.49
Salinity - 2.95

Sketch Location:

Logged BY / Date: Allen 2/19/07 *Reviewed BY / Date:*

Shaw™
Shaw E & I, Inc.

Sample Collection Log

117591 - Longhorn Army Ammunition Plant

Manager: Praveen Srivastav

Location Code: **LHSMW23**
Sample Number: **LHSMW23-**

PURGE RECORD:

Initial	Time(24hr)	DepthtoWater (ft)	Eh (mV)	pH (SU)	Conductivity (mS/cm)	Turbidity (NTU)	DissOxygen (ppm)	Temperature (C)	Purge Volume (gal)
Sample:	13:50	26.65	57.7	5.67	5.427	12.6	.44	19.75	4830

Logged BY / Date: Alh 02/19/07 *Reviewed BY / Date:* _____

00078089

Shaw®

GROUNDWATER SAMPLING FORM

Sheet 1 of 2

Operable Unit/Site ID: LHAAP-46 ~~LH2~~ LHSMW23 Sampling location ID: LHSMW23
Project Name/#: 117591 Sample ID: LHSMW23
Weather: Cool, Clear Collection Time/Date: 2/19/07 12:50

Pump Installation

Pump installation crew: Allen/Wenger
Installation date/beginning time: 2/19/07 13:00
PID/FID reading (well head/background): 0.8
Installation date/completion time: 2/19/07
Casing diameter (inches): 4"
Screen Interval (ft. BTOC): 32.18 to 42.18
Total well Depth (ft. BTOC): 42.18
Pump intake depth (ft BTOC): 37.18
Initial (pre-installation) DTW/time: 26.55
Post-installation DTW/time: 26.55
Final (after pump priming) DTW/time:
Max. sustainable pump rate (mL/min): 230
Free product (circle): LNAPL / DNAPL
Appearance of product: None
Volume of water removed during priming (mL):
Discharge tube diameter (3/8" or 1/4"): 1/4
Discharge tube length (ft.): —
Inlet reducer used (Y/N): N

Pneumatic Controller Tuning:
Initial air pressure = H (ft.) X 0.43 = 25 psi

	Initial	2	3	4	5	6	7	8	Final
Pressure (psi)	25								
Refill Setting	10								
Discharge Setting	4								
Flow rate (mL/min)	230								

Purging

Purging/sampling crew: Allen/Wenger
PID/FID reading (well head/background): 0.0
Purge date/beginning time: 2/19/07 13:20
Purge date/completion time: 02/19/07
Initial (pre-purging) DTW (ft. BTOC): 26.55
Final (post-purging) DTW (ft. BTOC): 26.65
Calculated tubing + pump volume: NA
No. of tubing + pump volumes purged: —

Pneumatic Controller Tuning:
Initial air pressure = H (ft.) X 0.43 = 25 psi

	Initial	2	3	4	5	6	7	8	Final
Pressure (psi)	25	25							
Refill Setting	10 Dec	11							
Discharge Setting	5 Dec	4							
Flow rate (mL/min)	230	230							

Water Quality Parameter Measurements

Time	DTW (ft. BTOC)	Purge Rate (mL/min)	Cumulative Volume Purged (L)	Temp. (degree C)	Electrical Conductivity (uMhos/cm)	pH	Eh (mv)	DO (mg/L)	Turbidity (NTU)
13:25	26.66	230	230	19.55	5.459	5.83	36.3	.77	23.1
13:30	26.66	230	1.150	19.81	5.452	5.75	44.1	.52	20.5
13:35	26.66	230	2.30	19.80	5.460	5.72	47.5	.49	19.0
13:40	26.66	230	3.450	19.78	5.459	5.67	54.5	.49	16.9
13:45	26.66	230	4.60	19.77	5.428	5.68	57.7	.44	12.7
13:50	26.66	230	5.750	19.75	5.427	5.67	57.7	.44	12.6
			5.75						

00078090

GROUNDWATER SAMPLING FORM

Sheet 2 of 2

LHSMW23

Water Quality Parameter Measurements (continued)

Time	DTW (ft. BTOC)	Purge Rate (mL/min)	Cumulative Volume Purged (L)	Temp. (degree C) ± 10%	±3% Electrical Conductivity (uMhos/cm)	pH ± 0.1	Eh (mv) ± 10	DO (mg/L) ± 10%	Turbidity (NTU) ± 10% 10/20

02/19/07

Sampling

Sampling beginning time: 13:50 Sampling completion time: 14:30

Water Quality Parameter Measurements

Time	DTW (ft. BTOC)	Purge Rate (mL/min)	Cumulative Volume Purged (L)	Temp. (degree C)	Electrical Conductivity (uMhos/cm)	pH	Eh (mv)	DO (mg/L)	Turbidity (NTU)
13:50	26.65	200		19.75	5.427	5.67	57.7	.44	12.6

Sample Information

Sample ID: LHSMW23

Sample collection date/time: 13:50 2/19/07

Duplicate sample collected (Y/N): N

Duplicate sample ID: NA

Split sample collected (Y/N): N

Split sample ID: NA

COC No(s):

Requested Analysis	Method	Containers	Requested Analysis	Method	Containers
VOC	8260	3 X 40ml	NO_2/NO_3/Cl/	300	1 - 500ml
Perchlorate	EPA 314.1	1 - 500 ml	Sulfates		
TOC	415.1	3 X 40ml	Sulfides	376.2	1 - 500ml
Alkalinity	310.1	1 X 500ml	Dehalococcoides	Shaw	2 1L amber
Methane/Ethane/	RSK				

Comments: Ethane/CO_2

Abbreviations: BTOC - Below top of casing; DTW - Depth to water; H - head above pump intake; mL - milliliter; L - Liter

00078091

WELL DEVELOPMENT RECORD

WELL/PIEZOMETER ID 46WW02
SHEET 1 of 1

PROJECT NAME: Longhorn PROJECT NO.: 117591 DATE: 10/19/08

LOCATION: Karnack, Tx DATE INSTALLED: Redevelopment

TOTAL DEPTH (FTOC) 47.39 CASING DIAMETER 4"

METHODS OF DEVELOPMENT

☐ Swabbing ☐ Bailing ☑ Pumping ☐ Describe

Equipment decontaminated prior to development ☐ Yes ☐ NO

Describe 3-part rinse; potable water, alconox + H_2O, DI water

EQUIPMENT NUMBERS:

pH Meter YSI 6280 EC Meter YSI 6280 Turbidity Meter YSI 6280 Thermometer YSI 6280

CASING VOLUME INFORMATION:

Casing ID (inch)	1.0	1.5	2.0	2.2	3.0	4.0	4.3	5.0	6.0	7.0	8.0
Unit Casing Volume (A) (gal/ft)	0.04	0.09	0.16	0.2	0.37	0.65	0.75	1.0	1.5	2.0	2.6

PURGING INFORMATION:

Measured Well Depth (B) 47.39 ft.

Measured Water Level Depth (C) 33.46 ft.

Length of Static Water Colume (D) 47.39 (B) - 33.46 (C) = 13.93 ft.

Casing Water Volume (E) = 0.65 (A) x 13.93 (D) = 9.05 gal

Total Purge Volume = 45 (gal)

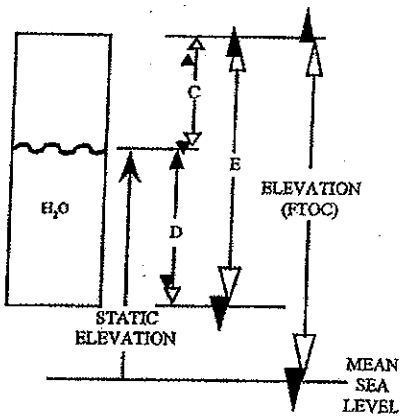

Date	Time	Water Level (FTOC)	Volume Removed (gal)	pH	EC	Temperature F or C	Turbidity/ Sand (ppm)	Comments
10/19/02	11:20	NR	10	4.81	0.506	20.06	6.2	Clear
10/19/02	11:35	NR	20	4.81	0.506	20.03	6.1	clear
10/19/02	11:47	NR	30	4.78	0.509	20.04	3.2	clear
10/19/02	12:01	NR	40	4.79	0.509	20.10	3.1	clear

10/19/08

FIGURE 5

Shaw®

GROUNDWATER SAMPLING FORM

Operable Unit/Site ID: LHAAP-46
Project Name/#: Longhorn 117591
Weather: clear, 70s

Sampling location ID: 46WW02
Sample ID: 46WW02-102808
Collection Time/Date: 13:55 10-28-08

Pump Installation

Pump installation crew: A. Willmon / R. Wagner
PID/FID reading (well head/background): 0.0
Casing diameter (inches): 4"
Total well Depth (ft. BTOC): 47.39
Initial (pre-installation) DTW/time: 33.47
Final (after pump priming) DTW/time: NA
Free product (circle): LNAPL / DNAPL
Volume of water removed during priming (mL): NA
Discharge tube length (ft.): 45

Installation date/beginning time: 10-28-08 13:15
Installation date/completion time: 10-28-08 13:18
Screen Interval (ft. BTOC): 37 to 47
Pump intake depth (ft BTOC): 42
Post-installation DTW/time: 33.48
Max. sustainable pump rate (mL/min): 100
Appearance of product: None
Discharge tube diameter (3/8" or 1/4"): 1/4"
Inlet reducer used (Y/N): N

Pneumatic Controller Tuning:
Initial air pressure = H (ft.) X 0.43 = NA psi

	Initial	2	3	4	5	6	7	8	Final
Pressure (psi)									
Refill Setting									
Discharge Setting									
Flow rate (mL/min)									

Purging

Purging/sampling crew: A. Willmon / R. Wagner
Purge date/beginning time: 10-28-08 13:37
Initial (pre-purging) DTW (ft. BTOC): 33.48
Calculated tubing + pump volume: NA

PID/FID reading (well head/background): 0.0
Purge date/completion time: 10/28/08 14:11
Final (post-purging) DTW (ft. BTOC): 33.54
No. of tubing + pump volumes purged: NA

Pneumatic Controller Tuning:
Initial air pressure = H (ft.) X 0.43 = NR psi

	Initial	2	3	4	5	6	7	8	Final
Pressure (psi)	34								34
Refill Setting	10								10
Discharge Setting	5								5
Flow rate (mL/min)	160								100

Water Quality Parameter Measurements

Time	DTW (ft. BTOC)	Purge Rate (mL/min)	Cumulative Volume Purged (L)	Temp. (degree C)	Electrical Conductivity (uMhos/cm)	pH	Eh (mv)	DO (mg/L)	Turbidity (NTU)
13:36	33.54	100	0.5	19.17	0.512	5.31	184.3	2.35	11.3
13:41	33.54	100	1.0	19.28	0.510	4.80	237.3	1.58	6.3
13:46	33.54	100	1.5	19.31	0.509	4.80	NR	1.54	NR
13:51	33.54	100	2.0	19.30	0.508	4.80	240.7	1.50	5.2

Shaw®

GROUNDWATER SAMPLING FORM

Sheet 2 of 2

46WW02

Water Quality Parameter Measurements (continued)

Time	DTW (ft. BTOC)	Purge Rate (mL/min)	Cumulative Volume Purged (L)	Temp. (degree C)	Electrical Conductivity (uMhos/cm)	pH	Eh (mv)	DO (mg/L)	Turbidity (NTU)

N.A. 10/29/08

Sampling

Sampling beginning time: 13:55 Sampling completion time: 14:05

Water Quality Parameter Measurements

Time	DTW (ft. BTOC)	Purge Rate (mL/min)	Cumulative Volume Purged (L)	Temp. (degree C)	Electrical Conductivity (uMhos/cm)	pH	Eh (mv)	DO (mg/L)	Turbidity (NTU)
14:11	33.54	100	4.0	19.34	0.501	4.80	239.9	1.63	4.0

Sample Information

Sample ID: 46WW02-102808 Sample collection date/time: 13:55 10.28.08

Duplicate sample collected (Y/N): N Duplicate sample ID: NA

Split sample collected (Y/N): N Split sample ID: NA

COC No(s): NR

Requested Analysis	Method	Containers	Requested Analysis	Method	Containers
VOCs		3- 40 mL Voa vials			

Comments: Purged & Sampled w/ bladder pump

Abbreviations: BTOC - Below top of casing; DTW - Depth to water; H - head above pump intake; mL - milliliter; L - Liter

WELL DEVELOPMENT RECORD

WELL/PIEZOMETER ID 46WW04
SHEET 1 of 1

PROJECT NAME: Longhorn PROJECT NO.: 117591 DATE: 10/17/08

LOCATION: Karnack, Tx DATE INSTALLED: Redevelopment

TOTAL DEPTH (FTOC) 26.68 CASING DIAMETER 4"

METHODS OF DEVELOPMENT

☐ Swabbing ☑ Bailing ☐ Pumping ☐ Describe

Equipment decontaminated prior to development ☐ Yes ☐ NO

Describe 3-part rinse; potable water, alconox + H_2O, DI Water

EQUIPMENT NUMBERS:

pH Meter YSI 6280 EC Meter YSI 6280 Turbidity Meter YSI 6280 Thermometer YSI 6280

CASING VOLUME INFORMATION:

Casing ID (inch)	1.0	1.5	2.0	2.2	3.0	4.0	4.3	5.0	6.0	7.0	8.0
Unit Casing Volume (A) (gal/ft)	0.04	0.09	0.16	0.2	0.37	0.65	0.75	1.0	1.5	2.0	2.6

PURGING INFORMATION:

Measured Well Depth (B) ~27' ft.

Measured Water Level Depth (C) 24.53 ft.

Length of Static Water Colume (D) 27 (B) - 24.53 (C) = 2.47 ft.

Casing Water Volume (E) = 0.65 (A) x 2.47 (D) = 1.61 gal

Total Purge Volume = 2 (gal)

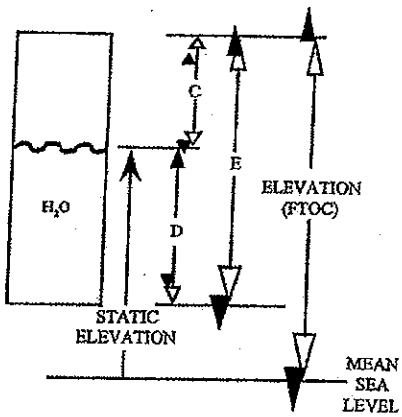

Date	Time	Water Level (FTOC)	Volume Removed (gal)	pH	EC	Temperature F or C	Turbidity/ Sand (ppm)	Comments
10/17/08	08:15	NR	2	6.27	5.219	19.19	518	murky
			DRY					

10/17/08

FIGURE 5

00078095

GROUNDWATER SAMPLING FORM

Sheet 1 of 2

46WW04

Operable Unit/Site ID: LHAAP-46
Project Name/#: Longhorn / 117591
Weather: clear, 50s

Sampling location ID: 46WW04
Sample ID: 46WW04-102708
Collection Time/Date: 14:35 10.27.08

Pump Installation

Pump installation crew: A. Willmore / R. Wagner
PID/FID reading (well head/background): 0.2
Casing diameter (inches): 4"
Total well Depth (ft. BTOC): 26.08
Initial (pre-installation) DTW/time: 24.51
Final (after pump priming) DTW/time:
Free product (circle): LNAPL / DNAPL
Volume of water removed during priming (mL):
Discharge tube length (ft.): 30

Installation date/beginning time: 10.27.08
Installation date/completion time: 10.27.08
Screen Interval (ft. BTOC): 16.5 to 26.5
Pump intake depth (ft BTOC): 25.9
Post-installation DTW/time: ~~26.58~~ 24.57
Max. sustainable pump rate (mL/min): 100'
Appearance of product: None
Discharge tube diameter (3/8" or 1/4"): 1/4"
Inlet reducer used (Y/N): N

Pneumatic Controller Tuning:
Initial air pressure = H (ft.) X 0.43 = NA psi

	Initial	2	3	4	5	6	7	8	Final
Pressure (psi)									
Refill Setting									
Discharge Setting									
Flow rate (mL/min)									

NA

Purging

Purging/sampling crew: A. Willmore / R. Wagner
Purge date/beginning time: 10.27.08 14:05
Initial (pre-purging) DTW (ft. BTOC): 24.51
Calculated tubing + pump volume: NA

PID/FID reading (well head/background): 0.2
Purge date/completion time: 10.27.08
Final (post-purging) DTW (ft. BTOC): 25.09
No. of tubing + pump volumes purged: NA

Pneumatic Controller Tuning:
Initial air pressure = H (ft.) X 0.43 = NA psi

	Initial	2	3	4	5	6	7	8	Final
Pressure (psi)									
Refill Setting									
Discharge Setting									
Flow rate (mL/min)	100								100

NA

Water Quality Parameter Measurements

Time	DTW (ft. BTOC)	Purge Rate (mL/min)	Cumulative Volume Purged (L)	Temp. (degree C)	Electrical Conductivity (uMhos/cm)	pH	Eh (mv)	DO (mg/L)	Turbidity (NTU)
14:10	25.01	100	0.5	19.08	5.259	6.23	64.8	5.93	423
14:15	25.51	100	1.0	19.08	5.29	6.23	65.0	5.71	424.1
14:20	25.86	100	1.5	19.08	5.259	6.22	65.3	5.19	433.3

00078096

Sheet 2 of 2

GROUNDWATER SAMPLING FORM

46WW04

Water Quality Parameter Measurements (continued)

Time	DTW (ft. BTOC)	Purge Rate (mL/min)	Cumulative Volume Purged (L)	Temp. (degree C) ±10%	Electrical Conductivity (uMhos/cm) ±3%	pH ±0.1	Eh (mv) ±10	DO (mg/L) ±10%	Turbidity (NTU) ±10%

10-20

10/27/08

Sampling

Sampling beginning time: 14:35

Sampling completion time: 14:45

Water Quality Parameter Measurements

Time	DTW (ft. BTOC)	Purge Rate (mL/min)	Cumulative Volume Purged (L)	Temp. (degree C)	Electrical Conductivity (uMhos/cm)	pH	Eh (mv)	DO (mg/L)	Turbidity (NTU)
14:50	25.88	100	4.5	19.08	5,248	6.24	69.2	4.70	429.5

Sample Information

Sample ID: 46WW04-102708

Sample collection date/time: 10-27-08 14:35

Duplicate sample collected (Y/N): N

Duplicate sample ID: NA

Split sample collected (Y/N): N

Split sample ID: NA

COC No(s):

Requested Analysis	Method	Containers	Requested Analysis	Method	Containers
TAL Metals		1-500mL HDPE			

Comments: Water level would not stabilize. Well nearly pumped dry. Slow recharge. Sampled & purged with peristaltic. Sample filtered in field

Abbreviations: BTOC - Below top of casing; DTW - Depth to water; H - head above pump intake; mL - milliliter; L - Liter

00078097

WELL DEVELOPMENT RECORD

LHAAP-46

WELL/PIEZOMETER ID LHSMW11

SHEET 1 of 1

PROJECT NAME: Longhorn PROJECT NO.: 117591 DATE: 10/18/08

LOCATION: Karnack, Tx DATE INSTALLED: Redevelopment

TOTAL DEPTH (FTOC) 26.90 CASING DIAMETER 4"

METHODS OF DEVELOPMENT

☐ Swabbing ☒ Bailing ☐ Pumping ☐ Describe

Equipment decontaminated prior to development ☐ Yes ☐ NO

Describe 3-part rinse; potable water, alconox + H_2O, DI water

EQUIPMENT NUMBERS:

pH Meter YSI 6280 EC Meter YSI 6280 Turbidity Meter YSI 6280 Thermometer YSI 6280

CASING VOLUME INFORMATION:

Casing ID (inch)	1.0	1.5	2.0	2.2	3.0	4.0	4.3	5.0	6.0	7.0	8.0
Unit Casing Volume (A) (gal/ft)	0.04	0.09	0.16	0.2	0.37	0.65	0.75	1.0	1.5	2.0	2.6

PURGING INFORMATION:

Measured Well Depth (B) 26.90 ft.

Measured Water Level Depth (C) 23.97 ft.

Length of Static Water Colume (D) 26.90 (B) - 23.97 (C) = 2.93 ft.

Casing Water Volume (E) + 0.65 (A) x 2.93 (D) = 1.90 gal

Total Purge Volume = 2.4 (gal)

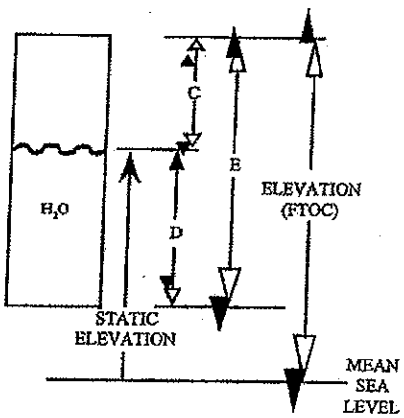

Date	Time	Water Level (FTOC)	Volume Removed (gal)	pH	EC	Temperature F or C	Turbidity/ Sand (ppm)	Comments
10/18/08	13:30	MR	2.4	6.31	5.251	18.17	308.1	murky

10/18/08

FIGURE 5

00078098

GROUNDWATER SAMPLING FORM

Sheet 1 of 2

LHSMW-11

Operable Unit/Site ID: LHAAP-46
Project Name/#: Longhorn
Weather: clear, 40s

Sampling location ID: ~~LHAW~~ LHSMW-11
Sample ID: LHSMW11 - 102708
Collection Time/Date: 12:15 10-27-08

Pump Installation

Pump installation crew: A. Willmore / R. Wagner
PID/FID reading (well head/background): 0.0
Casing diameter (inches): 4"
Total well Depth (ft. BTOC): ~~24.90~~ 26.90
Initial (pre-installation) DTW/time: 23.93
Final (after pump priming) DTW/time: NA
Free product (circle): LNAPL / DNAPL
Volume of water removed during priming (mL): NA
Discharge tube length (ft.): 28'

Installation date/beginning time: 10-27-08 11:00
Installation date/completion time: 10-27-08 11:02
Screen Interval (ft. BTOC): 16.5 ~~18.5~~ to ~~28.5~~ 26.5
Pump intake depth (ft BTOC): 25'
Post-installation DTW/time: 23.93
Max. sustainable pump rate (mL/min): 100
Appearance of product: None
Discharge tube diameter (3/8" or 1/4"): 1/4
Inlet reducer used (Y/N): N

Pneumatic Controller Tuning:
Initial air pressure = H (ft.) X 0.43 = NR psi

	Initial	2	3	4	5	6	7	8	Final
Pressure (psi)									
Refill Setting				NA					
Discharge Setting									
Flow rate (mL/min)									

Purging

Purging/sampling crew: A. Willmore / R. Wagner
Purge date/beginning time: 10-27-08 11:07
Initial (pre-purging) DTW (ft. BTOC): 23.93
Calculated tubing + pump volume: NA

PID/FID reading (well head/background): 0.0
Purge date/completion time: 10-27-08
Final (post-purging) DTW (ft. BTOC): 23.65
No. of tubing + pump volumes purged: NA

Pneumatic Controller Tuning:
Initial air pressure = H (ft.) X 0.43 = NA psi

	Initial	2	3	4	5	6	7	8	Final
Pressure (psi)									
Refill Setting	NA								NA
Discharge Setting									
Flow rate (mL/min)	100								100

Water Quality Parameter Measurements

Time	DTW (ft. BTOC)	Purge Rate (mL/min)	Cumulative Volume Purged (L)	Temp. (degree C)	Electrical Conductivity (uMhos/cm)	pH	Eh (mv)	DO (mg/L)	Turbidity (NTU)
11:12	23.65	100	0.5	18.20	5.204	6.30	20.9	4.14	246.7
11:17		100	1.0	18.53	5.235	6.28	56.7	4.48	167.6
11:22		100	1.5	18.74	5.247	6.28	82.2	4.44	153.7
11:27		100	2.0	17.86	5.249	6.30	117.6	6.82	135.9
11:37		100	3.0	17.11	5.250	6.24	121.2	6.66	116.2
11:47		100	4.0	16.34	5.251 5.252	6.32	118.9	7.88	96.9
11:57		100	5.0	15.87	~~5.252~~	6.32	115.6	7.76	84.8
12:07		100	6.0	15.51	5.252	6.32	111.2	7.76	75.3

GROUNDWATER SAMPLING FORM

00078099

LHSMW-11

Water Quality Parameter Measurements (continued)

Time	DTW (ft. BTOC)	Purge Rate (mL/min)	Cumulative Volume Purged (L)	Temp. (degree C) ±10%	Electrical Conductivity (uMhos/cm) ±3%	pH ±0.1	Eh (mv) ±10	DO (mg/L) ±10%	Turbidity (NTU) ±10%

10/27/08

10-20

Sampling

Sampling beginning time: 12:15

Sampling completion time: 12:25

Water Quality Parameter Measurements

Time	DTW (ft. BTOC)	Purge Rate (mL/min)	Cumulative Volume Purged (L)	Temp. (degree C)	Electrical Conductivity (uMhos/cm)	pH	Eh (mv)	DO (mg/L)	Turbidity (NTU)
12:32	23.65	100	8.5	15.49	5.253	6.32	110.8	7.76	65.3

Sample Information

Sample ID: LHSMW11-102708

Sample collection date/time: 10-27-08 12:15

Duplicate sample collected (Y/N): N

Duplicate sample ID: NA

Split sample collected (Y/N): N

Split sample ID: NA

COC No(s):

Requested Analysis	Method	Containers	Requested Analysis	Method	Containers
TAL METALS		1-500 mL HDPE			

Comments: Purged & Sampled w/ peristaltic pump
Used Filter (10 µ) to sample

Abbreviations: BTOC - Below top of casing; DTW - Depth to water; H - head above pump intake; mL - milliliter; L - Liter

00078100

WELL DEVELOPMENT RECORD

LHAAP-46

WELL/PIEZOMETER ID LHSMW12
SHEET 1 of 1

PROJECT NAME: Longhorn PROJECT NO.: 117591 DATE: 10/18/08

LOCATION: Karnack, Tx DATE INSTALLED: Redevelopment

TOTAL DEPTH (FTOC) 16.8 CASING DIAMETER 4"

METHODS OF DEVELOPMENT

☐ Swabbing ☑ Bailing ☐ Pumping ☐ Describe

Equipment decontaminated prior to development ☐ Yes ☐ NO

Describe 3-part rinse: potable water, alconox + H_2O, DI Water

EQUIPMENT NUMBERS:

pH Meter YSI 6280 EC Meter YSI 6280 Turbidity Meter YSI 6280 Thermometer YSI 6280

CASING VOLUME INFORMATION:

Casing ID (inch)	1.0	1.5	2.0	2.2	3.0	4.0	4.3	5.0	6.0	7.0	8.0
Unit Casing Volume (A) (gal/ft)	0.04	0.09	0.16	0.2	0.37	0.65	0.75	1.0	1.5	2.0	2.6

PURGING INFORMATION:

Measured Well Depth (B) 16.8 ft.

Measured Water Level Depth (C) NA ft.

Length of Static Water Colume (D) (B) - (C) = ____ ft.

Casing Water Volume (E) = 0.65 (A) x ____ (D) = ____ gal

Total Purge Volume = ____ (gal)

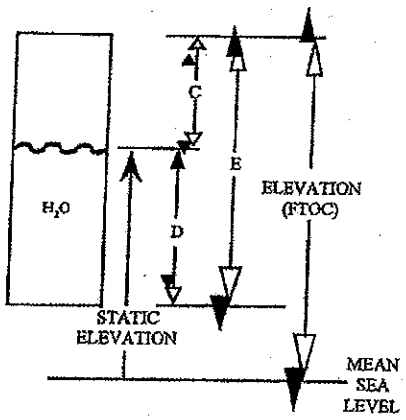

Date	Time	Water Level (FTOC)	Volume Removed (gal)	pH	EC	Temperature F or C	Turbidity/ Sand (ppm)	Comments

DRY

10/18/08

FIGURE 5

00078101

GROUNDWATER SAMPLING FORM

Sheet 1 of 2

Operable Unit/Site ID: LHAAP-46
Project Name/#: Longhorn / 117591
Weather: clear, 60s

Sampling location ID: LHSMW12
Sample ID: NA
Collection Time/Date: 10-27-08

Pump Installation

Pump installation crew: A. Willmore / P. Wagner
PID/FID reading (well head/background): NA
Casing diameter (inches): 4"
Total well Depth (ft. BTOC): 16.8
Initial (pre-installation) DTW/time:
Final (after pump priming) DTW/time:
Free product (circle): LNAPL / DNAPL
Volume of water removed during priming (mL):
Discharge tube length (ft.):

Installation date/beginning time: NA
Installation date/completion time:
Screen Interval (ft. BTOC): 4.5 to 16.5
Pump intake depth (ft BTOC):
Post-installation DTW/time:
Max. sustainable pump rate (mL/min):
Appearance of product:
Discharge tube diameter (3/8" or 1/4"):
Inlet reducer used (Y/N):

Pneumatic Controller Tuning:
Initial air pressure = H (ft.) X 0.43 = _____ psi

	Initial	2	3	4	5	6	7	8	Final
Pressure (psi)									
Refill Setting									
Discharge Setting									
Flow rate (mL/min)									

Purging

Purging/sampling crew:
Purge date/beginning time:
Initial (pre-purging) DTW (ft. BTOC):
Calculated tubing + pump volume: NA

PID/FID reading (well head/background):
Purge date/completion time:
Final (post-purging) DTW (ft. BTOC):
No. of tubing + pump volumes purged:

DRY

Pneumatic Controller Tuning:
Initial air pressure = H (ft.) X 0.43 = _____ psi

	Initial	2	3	4	5	6	7	8	Final
Pressure (psi)									
Refill Setting									
Discharge Setting									
Flow rate (mL/min)									

DRY

Water Quality Parameter Measurements

Time	DTW (ft. BTOC)	Purge Rate (mL/min)	Cumulative Volume Purged (L)	Temp. (degree C)	Electrical Conductivity (uMhos/cm)	pH	Eh (mv)	DO (mg/L)	Turbidity (NTU)

DRY

GROUNDWATER SAMPLING FORM

00078102

Sheet 2 of 2

LHSMW-12

Water Quality Parameter Measurements (continued)

Time	DTW (ft. BTOC)	Purge Rate (mL/min)	Cumulative Volume Purged (L)	Temp. (degree C) ±10%	Electrical Conductivity (uMhos/cm) ±3%	pH ±0.1	Eh (mv) ±10	DO (mg/L) ±10%	Turbidity (NTU) ±10%

10-20

DRY

Sampling

Sampling beginning time:_____ Sampling completion time:_____

Water Quality Parameter Measurements

Time	DTW (ft. BTOC)	Purge Rate (mL/min)	Cumulative Volume Purged (L)	Temp. (degree C)	Electrical Conductivity (uMhos/cm)	pH	Eh (mv)	DO (mg/L)	Turbidity (NTU)

DRY

Sample Information

Sample ID: LHSMW12

Sample collection date/time: NA

Duplicate sample collected (Y/N):_____

Duplicate sample ID:_____

Split sample collected (Y/N):_____

Split sample ID:_____

COC No(s):_____

Requested Analysis	Method	Containers	Requested Analysis	Method	Containers

DRY

Comments:

10·27·08 Dry well.

Abbreviations: BTOC - Below top of casing; DTW - Depth to water; H - head above pump intake; mL - milliliter; L - Liter

WELL DEVELOPMENT RECORD LHAAP-46

WELL/PIEZOMETER ID LHSMW15
SHEET 1 of 1

PROJECT NAME: Longhorn PROJECT NO.: 117591 DATE: 10/18/08
LOCATION: Karnack, Tx DATE INSTALLED: Redevelopment
TOTAL DEPTH (FTOC) 24.88 CASING DIAMETER 4"

METHODS OF DEVELOPMENT

☐ Swabbing ☑ Bailing ☐ Pumping ☐ Describe

Equipment decontaminated prior to development ☐ Yes ☐ NO

Describe 3-part rinse; potable water, alconox + H_2O, DI Water

EQUIPMENT NUMBERS:

pH Meter YSI 6280 EC Meter YSI 6280 Turbidity Meter YSI 6280 Thermometer YSI 6280

CASING VOLUME INFORMATION:

Casing ID (inch)	1.0	1.5	2.0	2.2	3.0	4.0	4.3	5.0	6.0	7.0	8.0
Unit Casing Volume (A) (gal/ft)	0.04	0.09	0.16	0.2	0.37	0.65	0.75	1.0	1.5	2.0	2.6

PURGING INFORMATION:

Measured Well Depth (B) 24.88 ft.

Measured Water Level Depth (C) 22.25 ft.

Length of Static Water Colume (D) = 24.88 (B) - 22.25 (C) = 2.63 ft.

Casing Water Volume (E) = 0.65 (A) x 2.63 (D) = 1.71 gal

Total Purge Volume = 2 (gal)

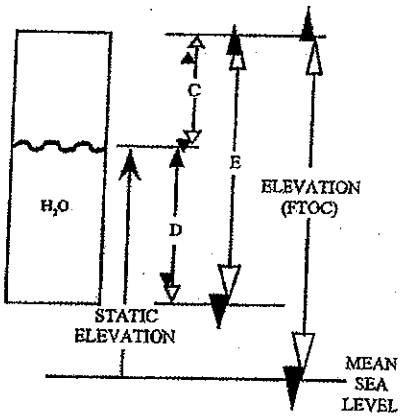

Date	Time	Water Level (FTOC)	Volume Removed (gal)	pH	EC	Temperature F or C	Turbidity/ Sand (ppm)	Comments
10/18/08	09:17	NR	2	6.10	5.071	20.61	1301.0	very silty water

10/18/08

FIGURE 5

00078104

GROUNDWATER SAMPLING FORM

Sheet 1 of 2

LHSMW15-102708

Operable Unit/Site ID: LHAAP-46
Project Name/#: Longhorn / 11
Weather: Clear, 60s

Sampling location ID:
Sample ID: LHSMW15 - 102708
Collection Time/Date: 13:50 10.27.08

Pump Installation

Pump installation crew: A. Willmore / R. Wagner
PID/FID reading (well head/background): 0.0
Casing diameter (inches): 4"
Total well Depth (ft. BTOC): 24.88
Initial (pre-installation) DTW/time: 22.28
Final (after pump priming) DTW/time: N/A
Free product (circle): LNAPL / DNAPL
Volume of water removed during priming (mL): N/A
Discharge tube length (ft.): 27'

Installation date/beginning time: 10/27/08 13:16
Installation date/completion time: 10/27/08 13:22
Screen Interval (ft. BTOC): 14.5 to 24.5
Pump intake depth (ft BTOC): 24'
Post-installation DTW/time: 22.27
Max. sustainable pump rate (mL/min): 100
Appearance of product: None
Discharge tube diameter (3/8" or 1/4"): 1/4"
Inlet reducer used (Y/N): N

Pneumatic Controller Tuning:
Initial air pressure = H (ft.) X 0.43 = NA psi

	Initial	2	3	4	5	6	7	8	Final
Pressure (psi)									
Refill Setting				NA					
Discharge Setting									
Flow rate (mL/min)									

Purging

Purging/sampling crew: A. Willmore / R. Wagner
Purge date/beginning time: 10.27.08 13:16
Initial (pre-purging) DTW (ft. BTOC): 22.27
Calculated tubing + pump volume: NA

PID/FID reading (well head/background): 0.0
Purge date/completion time: 10.27.08 14:05 ~~13:45~~
Final (post-purging) DTW (ft. BTOC): NA
No. of tubing + pump volumes purged: NA

Pneumatic Controller Tuning:
Initial air pressure = H (ft.) X 0.43 = _____ psi

	Initial	2	3	4	5	6	7	8	Final
Pressure (psi)									
Refill Setting	NA			NA					
Discharge Setting									
Flow rate (mL/min)	100								100

Water Quality Parameter Measurements

Time	DTW (ft. BTOC)	Purge Rate (mL/min)	Cumulative Volume Purged (L)	Temp. (degree C)	Electrical Conductivity (uMhos/cm)	pH	Eh (mv)	DO (mg/L)	Turbidity (NTU)
13:20	22.47	100	0.5	20.41	5.175	6.52	213.2	7.4	1286.9
13:30	23.00	100	1.0	20.42	5.076	6.23	196.4	6.31	1291.2
13:40	23.51	100	1.5	20.48	5.073	6.12	96.3	5.13	1273.4

00078105

Sheet 2 of 2

GROUNDWATER SAMPLING FORM

LHAAP-46 LHSMW15

Water Quality Parameter Measurements (continued)

Time	DTW (ft. BTOC)	Purge Rate (mL/min)	Cumulative Volume Purged (L)	Temp. (degree C) ±10%	Electrical Conductivity (uMhos/cm) ±3%	pH ±0.1	Eh (mv) ±10	DO (mg/L) ±10%	Turbidity (NTU) ±10%

10-20

10/24/08

Sampling

Sampling beginning time: 13:50 Sampling completion time: 14:00

Water Quality Parameter Measurements

Time	DTW (ft. BTOC)	Purge Rate (mL/min)	Cumulative Volume Purged (L)	Temp. (degree C)	Electrical Conductivity (uMhos/cm)	pH	Eh (mv)	DO (mg/L)	Turbidity (NTU)
14:05	24.52	100	4.0	20.42	5.074	6.14	115.4	5.02	1280.5

Sample Information

Sample ID: LHSMW15-102708

Sample collection date/time: 10.27.08 13:50

Duplicate sample collected (Y/N): N

Duplicate sample ID: NA

Split sample collected (Y/N): N

Split sample ID: NA

COC No(s):

Requested Analysis	Method	Containers	Requested Analysis	Method	Containers
VOCs		3- 40 mL Voa vials			
TAL METALS		1- 500 mL HDPE			

Comments: *Water level would not stabilize. Sampled w/ peristaltic and 10 µ filte

Abbreviations: BTOC - Below top of casing; DTW - Depth to water; H - head above pump intake; mL - milliliter; L - Liter

WELL DEVELOPMENT RECORD

LHAAP-46

WELL/PIEZOMETER ID LHSMW17
SHEET 1 of 1

PROJECT NAME: Longhorn PROJECT NO.: 117591 DATE: 10/18/08

LOCATION: Karnack, Tx DATE INSTALLED: Redevelopment

TOTAL DEPTH (FTOC) 26.75 CASING DIAMETER 4"

METHODS OF DEVELOPMENT

☐ Swabbing ☒ Bailing ☐ Pumping ☐ Describe

Equipment decontaminated prior to development ☐ Yes ☐ NO

Describe 3-part rinse; potable water, alconox + H_2O, DI water

EQUIPMENT NUMBERS:

pH Meter YSI 6280 EC Meter YSI 6280 Turbidity Meter YSI 6280 Thermometer YSI 6280

CASING VOLUME INFORMATION:

Casing ID (inch)	1.0	1.5	2.0	2.2	3.0	4.0	4.3	5.0	6.0	7.0	8.0
Unit Casing Volume (A) (gal/ft)	0.04	0.09	0.16	0.2	0.37	0.65	0.75	1.0	1.5	2.0	2.6

PURGING INFORMATION:

Measured Well Depth (B) 26.75 ft.

Measured Water Level Depth (C) 26.02 ft.

Length of Static Water Column (D) 26.75 (B) - 26.02 (C) = 0.73 ft.

Casing Water Volume (E) = 0.65 (A) x 0.73 (D) = 0.47 gal

Total Purge Volume = 0.5 (gal)

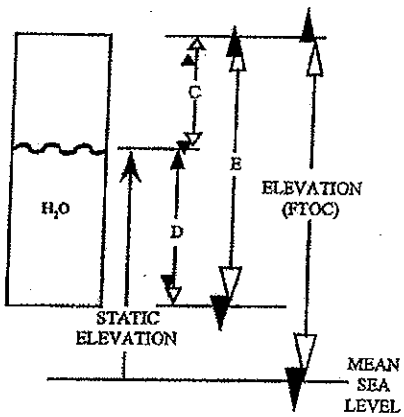

Date	Time	Water Level (FTOC)	Volume Removed (gal)	pH	EC	Temperature F or C	Turbidity/ Sand (ppm)	Comments
				DRY				
		No Recordings, Insufficient H_2O						
					10/18/08			

FIGURE 5

00078107

GROUNDWATER SAMPLING FORM

Sheet 1 of 2

Operable Unit/Site ID: Longhorn – LHAAP-46
Project Name/#: 117591
Weather: clear, cool

Sampling location ID: LHSMW17
Sample ID: NA
Collection Time/Date: 10.27.06

Pump Installation

Pump installation crew: A. Willmore / R. Wagner
PID/FID reading (well head/background): 0.0
Casing diameter (inches): 4"
Total well Depth (ft. BTOC): 26.75
Initial (pre-installation) DTW/time: 26.05
Final (after pump priming) DTW/time: NA
Free product (circle): LNAPL / DNAPL
Volume of water removed during priming (mL):
Discharge tube length (ft.): NA

Installation date/beginning time: DRY
Installation date/completion time:
Screen Interval (ft. BTOC): to
Pump intake depth (ft BTOC):
Post-installation DTW/time:
Max. sustainable pump rate (mL/min):
Appearance of product:
Discharge tube diameter (3/8" or 1/4"):
Inlet reducer used (Y/N):

Pneumatic Controller Tuning:
Initial air pressure = H (ft.) X 0.43 = NA psi

	Initial	2	3	4	5	6	7	8	Final
Pressure (psi)									
Refill Setting									
Discharge Setting									
Flow rate (mL/min)									

DRY

Purging

Purging/sampling crew:
Purge date/beginning time: NA
Initial (pre-purging) DTW (ft. BTOC):
Calculated tubing + pump volume: NA

PID/FID reading (well head/background):
Purge date/completion time: NA
Final (post-purging) DTW (ft. BTOC):
No. of tubing + pump volumes purged:

Pneumatic Controller Tuning:
Initial air pressure = H (ft.) X 0.43 = psi

	Initial	2	3	4	5	6	7	8	Final
Pressure (psi)									
Refill Setting									
Discharge Setting									
Flow rate (mL/min)									

DRY

Water Quality Parameter Measurements

Time	DTW (ft. BTOC)	Purge Rate (mL/min)	Cumulative Volume Purged (L)	Temp. (degree C)	Electrical Conductivity (µMhos/cm)	pH	Eh (mv)	DO (mg/L)	Turbidity (NTU)

DRY

00078108

Sheet 2 of 2

GROUNDWATER SAMPLING FORM

LHSMW-17

Water Quality Parameter Measurements (continued)

Time	DTW (ft. BTOC)	Purge Rate (mL/min)	Cumulative Volume Purged (L)	Temp. (degree C) ±10%	Electrical Conductivity (uMhos/cm) ±3%	pH ±0.1	Eh (mv) ±10	DO (mg/L) ±10%	Turbidity (NTU) ±10%

DRY

10-20

Sampling

Sampling beginning time: NA

Sampling completion time: NA

Water Quality Parameter Measurements

Time	DTW (ft. BTOC)	Purge Rate (mL/min)	Cumulative Volume Purged (L)	Temp. (degree C)	Electrical Conductivity (uMhos/cm)	pH	Eh (mv)	DO (mg/L)	Turbidity (NTU)

DRY

Sample Information

Sample ID: LHSMW17

Sample collection date/time: NA

Duplicate sample collected (Y/N):

Duplicate sample ID:

Split sample collected (Y/N):

Split sample ID:

COC No(s):

Requested Analysis	Method	Containers	Requested Analysis	Method	Containers

DRY

Comments: Not a significant amount of water in well. Insuffient Water to sample 10.27.08

Abbreviations: BTOC - Below top of casing; DTW - Depth to water; H - head above pump intake; mL - milliliter; L - Liter

00078109

WELL DEVELOPMENT RECORD

LHAAP-46

WELL/PIEZOMETER ID LHSMW20
SHEET 1 of 1

PROJECT NAME: Longhorn PROJECT NO.: 117591 DATE: 10/18/08

LOCATION: Karnack, Tx DATE INSTALLED: Redevelopment

TOTAL DEPTH (FTOC) 24.81 CASING DIAMETER 4"

METHODS OF DEVELOPMENT

☐ Swabbing ☑ Bailing ☐ Pumping ☐ Describe

Equipment decontaminated prior to development ☐ Yes ☐ NO

Describe 3-part rinse; potable water, alconox + H_2O, DI Water

EQUIPMENT NUMBERS:

pH Meter YSI 6280 EC Meter YSI 6280 Turbidity Meter YSI 6280 Thermometer YSI 6280

CASING VOLUME INFORMATION:

Casing ID (inch)	1.0	1.5	2.0	2.2	3.0	4.0	4.3	5.0	6.0	7.0	8.0
Unit Casing Volume (A) (gal/ft)	0.04	0.09	0.16	0.2	0.37	0.65	0.75	1.0	1.5	2.0	2.6

PURGING INFORMATION:

Measured Well Depth (B) 24.81 ft.

Measured Water Level Depth (C) 22.67 ft.

Length of Static Water Colume (D) 24.81 (B) - 22.67 (C) = 2.14 ft.

Casing Water Volume (E) = 0.65 (A) x 2.14 (D) = 1.39 gal

Total Purge Volume = 1.5 (gal)

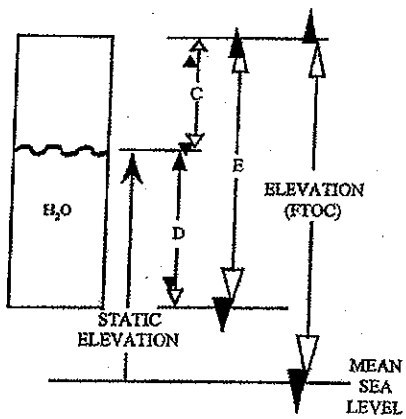

Date	Time	Water Level (FTOC)	Volume Removed (gal)	pH	EC	Temperature F or C	Turbidity/ Sand (ppm)	Comments
10/18/08	11:31	NR	1.5	6.16	7.733	19.01	10.7	clear

10/18/08

FIGURE 5

00078110

GROUNDWATER SAMPLING FORM

Sheet 1 of 2

LHSMW20

Operable Unit/Site ID: LHAAP-46
Project Name/#: Longhorn / 117591
Weather: clear - 40's

Sampling location ID: ~~LHSMW-20~~ LHSMW-20
Sample ID: LHSMW20 - 102708
Collection Time/Date: 10.27.08 15:20

Pump Installation

Pump installation crew: A. Willmore / R. Wagner
PID/FID reading (well head/background): 0.0
Casing diameter (inches): 4"
Total well Depth (ft. BTOC): ~~24.82~~ AW 24.81
Initial (pre-installation) DTW/time: ~~22.28~~ P 22.71
Final (after pump priming) DTW/time: NA
Free product (circle): LNAPL / DNAPL
Volume of water removed during priming (mL): NA
Discharge tube length (ft.): 27'

Installation date/beginning time: 10.27.08 15:00
Installation date/completion time: 10.27.08 15:02
Screen Interval (ft. BTOC): 14.8 to 24.5
Pump intake depth (ft BTOC): 24'
Post-installation DTW/time: 22.71
Max. sustainable pump rate (mL/min): 100
Appearance of product: None
Discharge tube diameter (3/8" or 1/4"): 1/4
Inlet reducer used (Y/N): N

Pneumatic Controller Tuning:
Initial air pressure = H (ft.) X 0.43 = NR psi

	Initial	2	3	4	5	6	7	8	Final
Pressure (psi)									
Refill Setting				NA					
Discharge Setting									
Flow rate (mL/min)									

Purging

Purging/sampling crew: A. Willmore / R. Wagner
Purge date/beginning time: 10.27.08
Initial (pre-purging) DTW (ft. BTOC): 22.71
Calculated tubing + pump volume: NA

PID/FID reading (well head/background): 0.0
Purge date/completion time: 10.27.08
Final (post-purging) DTW (ft. BTOC): 24.32
No. of tubing + pump volumes purged: NA

Pneumatic Controller Tuning:
Initial air pressure = H (ft.) X 0.43 = NR psi

	Initial	2	3	4	5	6	7	8	Final
Pressure (psi)									
Refill Setting	NA								
Discharge Setting									NA
Flow rate (mL/min)	100								100

Water Quality Parameter Measurements

Time	DTW (ft. BTOC)	Purge Rate (mL/min)	Cumulative Volume Purged (L)	Temp. (degree C)	Electrical Conductivity (uMhos/cm)	pH	Eh (mv)	DO (mg/L)	Turbidity (NTU)
15:07	23.16	100	0.5	18.42	7.733	6.19	114.0	4.27	0.9
15:12	23.56	100	1.0	18.41	7.734	6.19	113.9	4.21	0.6
15:17	24.32	100	1.5	18.40	7.734	6.19	113.7	4.27	0.5

GROUNDWATER SAMPLING FORM

00078111
Sheet 2 of 2

LHSMW20

Water Quality Parameter Measurements (continued)

Time	DTW (ft. BTOC)	Purge Rate (mL/min)	Cumulative Volume Purged (L)	Temp. (degree C) ±10%	Electrical Conductivity (uMhos/cm) ±3%	pH ±0.1	Eh (mv) ±10	DO (mg/L) ±10%	Turbidity (NTU) ±10%

10/25/08

10-20

Sampling

Sampling beginning time: 15:20 Sampling completion time: 15:30

Water Quality Parameter Measurements

Time	DTW (ft. BTOC)	Purge Rate (mL/min)	Cumulative Volume Purged (L)	Temp. (degree C)	Electrical Conductivity (uMhos/cm)	pH	Eh (mv)	DO (mg/L)	Turbidity (NTU)
15:32 ~~15:27~~	24.32	100	4.0	18.58	7.704	6.21	113.5	4.42	0.6

Sample Information

Sample ID: LHSMW20-102708
Sample collection date/time: 10.27.08 15:20
Duplicate sample collected (Y/N): N
Duplicate sample ID: NA
Split sample collected (Y/N): N
Split sample ID: NA
COC No(s):

Requested Analysis	Method	Containers	Requested Analysis	Method	Containers
VOCs		3 40mL voa vials			

Comments: * Nearly purged dry. Used peristaltic pump to purge & sample-
No ~~[illegible]~~ 10µ filter during sampling. Water level never stabilized

Abbreviations: BTOC - Below top of casing; DTW - Depth to water; H - head above pump intake; mL - milliliter; L - Liter

No filter used

00078112

WELL DEVELOPMENT RECORD

LHPP-46

WELL/PIEZOMETER ID LHSMW23
SHEET 1 of 1

PROJECT NAME: Longhorn PROJECT NO.: 117591 DATE: 10/19/08

LOCATION: Karnack, Tx DATE INSTALLED: Redevelopment

TOTAL DEPTH (FTOC) 41.95 CASING DIAMETER 4"

METHODS OF DEVELOPMENT

☐ Swabbing ☐ Bailing ☑ Pumping ☐ Describe

Equipment decontaminated prior to development ☐ Yes ☐ NO

Describe 3-part rinse; potable water, alconox + H_2O, DI Water

EQUIPMENT NUMBERS:

pH Meter YSI 6280 EC Meter YSI 6280 Turbidity Meter YSI 6280 Thermometer YSI 6280

CASING VOLUME INFORMATION:

Casing ID (inch)	1.0	1.5	2.0	2.2	3.0	4.0	4.3	5.0	6.0	7.0	8.0
Unit Casing Volume (A) (gal/ft)	0.04	0.09	0.16	0.2	0.37	0.65	0.75	1.0	1.5	2.0	2.6

PURGING INFORMATION:

Measured Well Depth (B) 41.95 ft.

Measured Water Level Depth (C) 28.28 ft.

Length of Static Water Colume (D) 41.95 (B) - 28.28 (C) = 13.67 ft.

Casing Water Volume (E) = 0.65 (A) x 13.67 (D) = 8.89 gal

Total Purge Volume = 45 (gal)

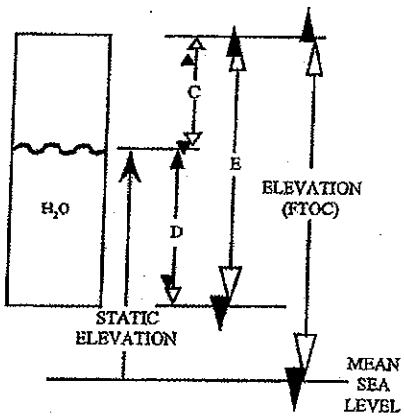

Date	Time	Water Level (FTOC)	Volume Removed (gal)	pH	EC	Temperature F or C	Turbidity/ Sand (ppm)	Comments
10/19/08	13:10	NR	10	6.11	5.103	19.45	171.3	silty
10/19/08	13:42	NR	20	6.11	5.108	19.46	189.4	silty
10/19/08	14:07	NR	30	6.08	5.101	19.53	191.2	silty
10/19/08	14:31	NR	40	6.06	5.103	19.61	293.6	silty

10/19/08

FIGURE 5

Shaw®

GROUNDWATER SAMPLING FORM

Sheet 1 of 2

Operable Unit/Site ID: LHAAP-46
Project Name/#: Longhorn / 117591
Weather: clear, Low 50s

Sampling location ID: LHSMW-23
Sample ID: LHSMW23-102808
Collection Time/Date: 11:40 10-28-08

Pump Installation

Pump installation crew: A. Willmore / R. Wagner
PID/FID reading (well head/background): 0.2
Casing diameter (inches): 4"
Total well Depth (ft. BTOC): 41.95
Initial (pre-installation) DTW/time: 28.28
Final (after pump priming) DTW/time: NA
Free product (circle): LNAPL / DNAPL
Volume of water removed during priming (mL): NA
Discharge tube length (ft.): 39'

Installation date/beginning time: 10-28-08 10:21
Installation date/completion time: 10-28-08 10:24
Screen Interval (ft. BTOC): 31.5 to 41.5
Pump intake depth (ft BTOC): 36'
Post-installation DTW/time: 28.28
Max. sustainable pump rate (mL/min): 100
Appearance of product: None
Discharge tube diameter (3/8" or 1/4"): 1/4"
Inlet reducer used (Y/N): N

Pneumatic Controller Tuning:
Initial air pressure = H (ft.) X 0.43 = NA psi

	Initial	2	3	4	5	6	7	8	Final
Pressure (psi)									
Refill Setting				NA					
Discharge Setting									
Flow rate (mL/min)									

Purging

Purging/sampling crew: A. Willmore / R. Wagner
Purge date/beginning time: 10/28/08 10:32
Initial (pre-purging) DTW (ft. BTOC): 28.08
Calculated tubing + pump volume: NA

PID/FID reading (well head/background): 0.2
Purge date/completion time: 10-28-08
Final (post-purging) DTW (ft. BTOC): 28.89
No. of tubing + pump volumes purged: NA

Pneumatic Controller Tuning:
Initial air pressure = H (ft.) X 0.43 = NA psi

	Initial	2	3	4	5	6	7	8	Final
Pressure (psi)									
Refill Setting	NA								NA
Discharge Setting									
Flow rate (mL/min)	100								100

Water Quality Parameter Measurements

Time	DTW (ft. BTOC)	Purge Rate (mL/min)	Cumulative Volume Purged (L)	Temp. (degree C)	Electrical Conductivity (uMhos/cm)	pH	Eh (mv)	DO (mg/L)	Turbidity (NTU)
10:37	28.35	100	0.5	15.87	5.232	6.22	24.2	3.07	175.6
10:42	28.39	100	1.0	16.10	5.152	6.12	44.0	4.61	169.5
10:47	~~28.39~~ 28.39	100	1.5	16.71	5.154	6.10	54.2	4.92	161.7
10:52	~~28.39~~ 28.39	100	2.0	16.79	5.144	6.10	57.1	4.84	164.4
10:57	28.89	100	2.5	17.24	5.122	6.09	63.6	4.80	152.2
11:02	28.89	100	3.0	17.47	5.097	6.09	69.3	4.48	135.0
11:12	28.89	100	4.0	17.62	5.105	6.08	68.3	4.49	121.3
11:22	28.89	100	5.0	17.61	5.106	6.09	67.4	4.47	101.6

Shaw®

GROUNDWATER SAMPLING FORM

LHSMW23

Water Quality Parameter Measurements (continued)

Time	DTW (ft. BTOC)	Purge Rate (mL/min)	Cumulative Volume Purged (L)	Temp. (degree C)	Electrical Conductivity (uMhos/cm)	pH	Eh (mv)	DO (mg/L)	Turbidity (NTU)
11:32	28.89	100	6.0	17.66	5.107	6.09	63.1	4.49	86.3

10/28/08

Sampling

Sampling beginning time: 11:40 Sampling completion time: 11:50

Water Quality Parameter Measurements

Time	DTW (ft. BTOC)	Purge Rate (mL/min)	Cumulative Volume Purged (L)	Temp. (degree C)	Electrical Conductivity (uMhos/cm)	pH	Eh (mv)	DO (mg/L)	Turbidity (NTU)
11:57	28.89	100	8.5	17.61	5.108	6.09	62.4	4.48	84.1

Sample Information

Sample ID: LHSMW23-102808

Sample collection date/time: 10.28.08 11:40

Duplicate sample collected (Y/N): N

Duplicate sample ID: NA

Split sample collected (Y/N): N

Split sample ID: NA

COC No(s):

Requested Analysis	Method	Containers	Requested Analysis	Method	Containers
		3-40 mL VOA vial			
		1-500 mL HDPE			

Comments: Purged and sampled w/ peristaltic pump
Used 10µ filter during sampling

Abbreviations: BTOC - Below top of casing; DTW - Depth to water; H - head above pump intake; mL - milliliter; L - Liter

00078115

WELL DEVELOPMENT RECORD

LHAPP-46

WELL/PIEZOMETER ID LHSMW25
SHEET 1 of 1

PROJECT NAME: Longhorn PROJECT NO.: 117591 DATE: 10/19/08

LOCATION: Karnack, Tx DATE INSTALLED: Redevelopment

TOTAL DEPTH (FTOC) 42.40 CASING DIAMETER 4"

METHODS OF DEVELOPMENT

☐ Swabbing ☐ Bailing ☑ Pumping ☐ Describe

Equipment decontaminated prior to development ☐ Yes ☐ NO

Describe 3-part rinse; potable water, alconox + H_2O, DI Water

EQUIPMENT NUMBERS:

pH Meter YSI 6280 EC Meter YSI 6280 Turbidity Meter YSI 6280 Thermometer YSI 6280

CASING VOLUME INFORMATION:

Casing ID (inch)	1.0	1.5	2.0	2.2	3.0	4.0	4.3	5.0	6.0	7.0	8.0
Unit Casing Volume (A) (gal/ft)	0.04	0.09	0.16	0.2	0.37	0.65	0.75	1.0	1.5	2.0	2.6

PURGING INFORMATION:

Measured Well Depth (B) 42.40 ft.

Measured Water Level Depth (C) 26.47 ft.

Length of Static Water Column (D) 42.40 (B) - 26.47 (C) = 15.93 ft.

Casing Water Volume (E) = 0.65 (A) x 15.93 (D) = 10.35 gal

Total Purge Volume = 47 (gal)

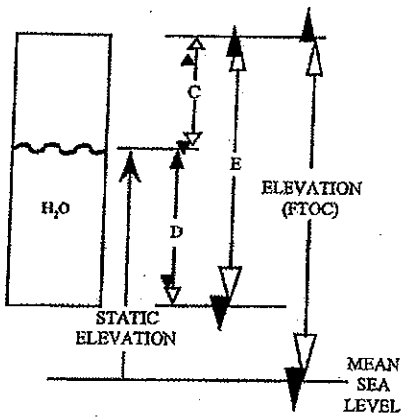

Date	Time	Water Level (FTOC)	Volume Removed (gal)	pH	EC	Temperature F or C	Turbidity/ Sand (ppm)	Comments
10/19/08	15:00	NR	10	6.61	4.139	19.87	61.3	Clear
10/19/08	15:25	NR	20	6.62	4.136	20.19	42.3	
10/19/08	15:30	NR	30	6.60	4.132	20.14	101.3	
10/19/08	15:59	NR	40	6.63	4.133	20.19	201.4	silty
			DRY @ 47 gallon					
						10/19/08		

FIGURE 5

00078116

Shaw®

GROUNDWATER SAMPLING FORM

Sheet 1 of 2

LHSMW 25

Operable Unit/Site ID: LHAAP-46
Project Name/#: Longhorn / 117591
Weather: clear, 60s

Sampling location ID: LHSMW25
Sample ID: LHSMW24
Collection Time/Date: 12:50 10-28-08

Pump Installation

Pump installation crew: A. Willmore / R. Wagner
PID/FID reading (well head/background): 0.0
Casing diameter (inches): 4"
Total well Depth (ft. BTOC): 42.40
Initial (pre-installation) DTW/time: 26.50
Final (after pump priming) DTW/time: NA
Free product (circle): LNAPL / DNAPL
Volume of water removed during priming (mL): NA
Discharge tube length (ft.): 46'

Installation date/beginning time: 10-28-08 12:18
Installation date/completion time: 10-28-08 12:28
Screen Interval (ft. BTOC): 32 to 42
Pump intake depth (ft BTOC): 37
Post-installation DTW/time: 26.50
Max. sustainable pump rate (mL/min): 100
Appearance of product: None
Discharge tube diameter (3/8" or 1/4"): 1/4"
Inlet reducer used (Y/N): N

Pneumatic Controller Tuning:
Initial air pressure = H (ft.) X 0.43 = NA psi

	Initial	2	3	4	5	6	7	8	Final
Pressure (psi)									
Refill Setting				NA					
Discharge Setting									
Flow rate (mL/min)									

Purging

Purging/sampling crew: A. Willmore / R. Wagner
Purge date/beginning time: 10/28/08 12:23
Initial (pre-purging) DTW (ft. BTOC): 26.50
Calculated tubing + pump volume: NA

PID/FID reading (well head/background): 0.0
Purge date/completion time: 10/28/08
Final (post-purging) DTW (ft. BTOC): 26.52
No. of tubing + pump volumes purged: NA

Pneumatic Controller Tuning:
Initial air pressure = H (ft.) X 0.43 = NA psi

	Initial	2	3	4	5	6	7	8	Final
Pressure (psi)									
Refill Setting	NA								NA
Discharge Setting									
Flow rate (mL/min)	100								100

Water Quality Parameter Measurements

Time	DTW (ft. BTOC)	Purge Rate (mL/min)	Cumulative Volume Purged (L)	Temp. (degree C)	Electrical Conductivity (uMhos/cm)	pH	Eh (mv)	DO (mg/L)	Turbidity (NTU)
12:28	26.52	100	0.5	19.53	4.136	6.63	22.6	3.42	66.2
12:33	26.52	100	1.0	19.53	4.128	6.62	18.8	3.15	64.4
12:38	26.50	100	1.5	19.53	4.113	6.61	17.5	3.12	50.1
12:43	26.50	100	2.0	19.31	4.117	6.60	16.1	3.10	53.6

Shaw®

GROUNDWATER SAMPLING FORM

LHSMW25

Water Quality Parameter Measurements (continued)

Time	DTW (ft. BTOC)	Purge Rate (mL/min)	Cumulative Volume Purged (L)	Temp. (degree C)	Electrical Conductivity (uMhos/cm)	pH	Eh (mv)	DO (mg/L)	Turbidity (NTU)

10/28/08

Sampling

Sampling beginning time: 12:50 Sampling completion time: 13:00

Water Quality Parameter Measurements

Time	DTW (ft. BTOC)	Purge Rate (mL/min)	Cumulative Volume Purged (L)	Temp. (degree C)	Electrical Conductivity (uMhos/cm)	pH	Eh (mv)	DO (mg/L)	Turbidity (NTU)
13:08	26.57	100	4.5	19.30	4,120	6.61	14.3	3.09	24.1

Sample Information

Sample ID: LHSMW25-102808

Sample collection date/time: 10-28-08 12:50

Duplicate sample collected (Y/N): Y

Duplicate sample ID: LHSMW25-102808-QA

Split sample collected (Y/N): N

Split sample ID: NA

COC No(s):

Requested Analysis	Method	Containers	Requested Analysis	Method	Containers
VOCs		9x 40mL Hcl vials			

Comments: Purged & Sampled w/ peristaltic pump No filter used VOCs
Took MS/MSD + F.D (2 bottles each)

Abbreviations: BTOC - Below top of casing; DTW - Depth to water; H - head above pump intake; mL - milliliter; L - Liter

Shaw®

GROUNDWATER SAMPLING FORM

Operable Unit/Site ID: LHAAP
Project Name/#: 117591.0009B830
Weather: Sunny 72°F

Sampling location ID: Site 46
Sample ID: LHSMW09-031508
Collection Time/Date: 11:30 3/15/08

Pump Installation

Pump installation crew: Beesinger
PID/FID reading (well head/background)
Casing diameter (inches): 4"
Total well Depth (ft. BTOC): 26.25
Initial (pre-installation) DTW/time: 19.30
Final (after pump priming) DTW/time: 19.64
Free product (circle): LNAPL / DNAPL
Volume of water removed during priming (mL): —
Discharge tube length (ft.):

Installation date/beginning time: 3/15/08 9:50
Installation date/completion time: 3/15/08 10:05
Screen Interval (ft. BTOC): 16.25 to 26.25
Pump intake depth (ft BTOC): 23.00
Post-installation DTW/time: 19.20
Max. sustainable pump rate (mL/min): 100
Appearance of product: NA
Discharge tube diameter (3/8" or 1/4"): NA
Inlet reducer used (Y/N): N

Pneumatic Controller Tuning:
Initial air pressure = H (ft.) X 0.43 = _____ psi

	Initial	2	3	4	5	6	7	8	Final
Pressure (psi)									
Refill Setting									
Discharge Setting									
Flow rate (mL/min)									

Purging

Purging/sampling crew: Beesinger
Purge date/beginning time: 3/15/08 10:05
Initial (pre-purging) DTW (ft. BTOC): 19.20
Calculated tubing + pump volume: NA

PID/FID reading (well head/background):
Purge date/completion time: 3/15/08 11:30
Final (post-purging) DTW (ft. BTOC): 19.64
No. of tubing + pump volumes purged:

Pneumatic Controller Tuning:
Initial air pressure = H (ft.) X 0.43 = _____ psi

	Initial	2	3	4	5	6	7	8	Final
Pressure (psi)	15								
Refill Setting	12								
Discharge Setting	15								
Flow rate (mL/min)	100								

Water Quality Parameter Measurements

Time	DTW (ft. BTOC)	Purge Rate (mL/min)	Cumulative Volume Purged (L)	Temp. (degree C)	Electrical Conductivity (uMhos/cm)	pH	Eh (mv)	DO (mg/L)	Turbidity (NTU)
10:10	19.45	100	.500	18.79	0.092	5.81	188.1	7.45	35.4
10:15	19.48	100	1000	18.87	0.147	5.67	187.6	5.69	29.2
10:20	19.53	100	1500	19.16	0.146	5.64	190.0	5.88	21.4
10:25	19.57	100	2000	19.24	0.146	5.64	190.7	6.07	18.5
10:30	19.60	100	2500	19.36	0.146	5.61	193.7	4.84	17.4
10:35	19.62	100	3000	19.52	0.145	5.63	194.8	4.13	16.3
10:40	19.62	100	3500	19.48	0.145	5.62	196.8	4.03	16.5
10:45	19.63	100	4000	19.44	0.145	5.60	199.2	4.02	17.7

00078119

Shaw

GROUNDWATER SAMPLING FORM

Sheet 2 of 2

LHSMW09

Water Quality Parameter Measurements (continued)

Time	DTW (ft. BTOC)	Purge Rate (mL/min)	Cumulative Volume Purged (L)	Temp. (degree C) ± 10%	±3% Electrical Conductivity (uMhos/cm)	pH ± 0.1	Eh (mv) ± 10	DO (mg/L) ± 10%	Turbidity (NTU) ± 10%
10:50	19.63	100	4500	19.20	0.144	5.59	201.5	4.39	16.0
10:55	19.63	100	5000	19.10	0.144	5.58	203.7	4.06	15.5
11:00	19.64	100	5500	19.00	0.144	5.57	205.4	3.96	16.1
11:05	19.64	100	6000	18.92	0.144	5.56	207.2	3.59	15.0
11:10	19.64	100	6500	18.86	0.144	5.56	208.6	3.82	14.0
11:15	19.64	100	7000	18.83	0.144	5.55	210.1	4.06	13.1
11:20	19.64	100	7500	18.87	0.144	5.55	211.5	4.05	11.9
11:25	19.64	100	8000	18.88	0.144	5.54	212.3	4.03	10.0
11:30	19.64	100	8500	18.87	0.143	5.54	213.6	4.04	9.1

Sampling

Sampling beginning time: 11:30 Sampling completion time: 11:32

Water Quality Parameter Measurements

Time	DTW (ft. BTOC)	Purge Rate (mL/min)	Cumulative Volume Purged (L)	Temp. (degree C)	Electrical Conductivity (uMhos/cm)	pH	Eh (mv)	DO (mg/L)	Turbidity (NTU)
11:32	19.64	100	8700	18.87	0.143	5.54	214.0	4.05	8.8

Sample Information

Sample ID: LHSMW09-031508

Sample collection date/time: 3/15/08 11:30

Duplicate sample collected (Y/N):

Duplicate sample ID:

Split sample collected (Y/N):

Split sample ID:

COC No(s):

Requested Analysis	Method	Containers	Requested Analysis	Method	Containers
VOA		2-40ml glass			

Comments:

Abbreviations: BTOC - Below top of casing; DTW - Depth to water; H - head above pump intake; mL - milliliter; L - Liter

Shaw®

GROUNDWATER SAMPLING FORM

Sheet 1 of 2

Operable Unit/Site ID: LHAAP
Project Name/#: 117591.0009B830
Weather: Clear 65°F

Sampling location ID: Site 46
Sample ID: LHSMW11-031508
Collection Time/Date: 9:30 3/15/08

Pump Installation

Pump installation crew: Beesinger
PID/FID reading (well head/background):
Casing diameter (inches): 4"
Total well Depth (ft. BTOC): 26.90
Initial (pre-installation) DTW/time: 23.35
Final (after pump priming) DTW/time: 23.72
Free product (circle): LNAPL / DNAPL
Volume of water removed during priming (mL): —
Discharge tube length (ft.): —

Installation date/beginning time: 3/15/08 7:50
Installation date/completion time: 3/15/08 8:00
Screen Interval (ft. BTOC): 16.90 to 26.90
Pump intake depth (ft BTOC): 25.00
Post-installation DTW/time: 23.20
Max. sustainable pump rate (mL/min): 100
Appearance of product: NA
Discharge tube diameter (3/8" or 1/4"): —
Inlet reducer used (Y/N): N

Pneumatic Controller Tuning:
Initial air pressure = H (ft.) X 0.43 = _____ psi

	Initial	2	3	4	5	6	7	8	Final
Pressure (psi)									
Refill Setting									
Discharge Setting									
Flow rate (mL/min)									

Purging

Purging/sampling crew: Beesinger
Purge date/beginning time: 3/15/08 8:00
Initial (pre-purging) DTW (ft. BTOC): 23.20
Calculated tubing + pump volume: NA

PID/FID reading (well head/background):
Purge date/completion time: 3/15/08 9:30
Final (post-purging) DTW (ft. BTOC): 23.72
No. of tubing + pump volumes purged:

Pneumatic Controller Tuning:
Initial air pressure = H (ft.) X 0.43 = _____ psi

	Initial	2	3	4	5	6	7	8	Final
Pressure (psi)	18								
Refill Setting	15								
Discharge Setting	18								
Flow rate (mL/min)	100								

Water Quality Parameter Measurements

Time	DTW (ft. BTOC)	Purge Rate (mL/min)	Cumulative Volume Purged (L)	Temp. (degree C)	Electrical Conductivity (uMhos/cm)	pH	Eh (mv)	DO (mg/L)	Turbidity (NTU)
8:10	23.50	100	1.000	18.46	5.297	6.40	129.2	0.01	90.7
8:15	23.55	100	1.500	18.35	5.321	6.37	133.4	0.04	74.7
8:20	23.60	100	2.000	18.27	5.334	6.35	133.7	0.23	63.2
8:25	23.65	100	2.500	18.24	5.338	6.34	128.5	0.65	63.7
8:30	23.68	100	3.000	18.24	5.339	6.33	124.4	0.86	58.5
8:35	23.70	100	3.500	18.24	5.339	6.33	121.2	0.99	53.1
8:40	23.71	100	4.000	18.20	5.341	6.33	119.4	0.98	48.5
8:45	23.72	100	4.500	18.20	5.341	6.32	119.8	0.98	47.1

00078121

GROUNDWATER SAMPLING FORM

Sheet 2 of 2

LHSMW11

Water Quality Parameter Measurements (continued)

Time	DTW (ft. BTOC)	Purge Rate (mL/min)	Cumulative Volume Purged (L)	Temp. (degree C) ±10%	Electrical Conductivity (uMhos/cm) ±3%	pH ±0.1	Eh (mv) ±10	DO (mg/L) ±10%	Turbidity (NTU) ±10%
8:50	23.72	100	5000	18.18	5.341	6.32	121.6	1.03	43.7
8:55	23.72	100	5500	18.18	5.340	6.32	124.1	1.04	41.1
9:00	23.72	100	6000	18.20	5.341	6.31	127.4	1.09	38.5
9:05	23.72	100	6500	18.22	5.342	6.31	129.8	1.10	35.3
9:10	23.72	100	7000	18.23	5.342	6.31	131.2	1.11	33.9
9:15	23.72	100	7500	18.26	5.342	6.31	131.4	1.12	26.7
9:20	23.72	100	8000	18.27	5.343	6.31	131.2	1.13	20.1
9:25	23.72	100	8500	18.27	5.341	6.31	131.3	1.14	17.0
9:30	23.72	100	9000	18.28	5.342	6.32	132.6	1.13	12.3

10/20

Sampling

Sampling beginning time: 9:30 Sampling completion time: 9:32

Water Quality Parameter Measurements

Time	DTW (ft. BTOC)	Purge Rate (mL/min)	Cumulative Volume Purged (L)	Temp (degree C)	Electrical Conductivity (uMhos/cm)	pH	Eh (mv)	DO (mg/L)	Turbidity (NTU)
9:32	23.72	100	9200	18.28	5.342	6.32	132.0	1.13	11.5

Sample Information

Sample ID: LHSMW11-031508

Sample collection date/time: 3/15/08 9:30

Duplicate sample collected (Y/N):

Duplicate sample ID:

Split sample collected (Y/N):

Split sample ID:

COC No(s):

Requested Analysis	Method	Containers	Requested Analysis	Method	Containers
VOA		2-40 ml glass			

Comments:

Abbreviations: BTOC - Below top of casing; DTW - Depth to water; H - head above pump intake; mL - milliliter; L - Liter

Sampling
3/15/08

23

[illegible] - Setup on LHS11W11
[illegible] a bladder pump.
[illegible] sampling all equipment
[illegible] decomned and disposable
[illegible] were used. Sample
[illegible]-031508 was collected
at 8:30 for VOCs.

[illegible] - Setup on LHS11W09
with a bladder pump.
Decomned equipment before
sampling and used disposable
gloves. Sample LHS11W09-031508
was collected at 11:30 for
VOCs.

Scott Berger

Chain of Custody

NO. 10250

Shaw® Shaw Environmental & Infrastructure, Inc.
3010 Briarpark Drive, Suite 400
Houston, TX 77042
(713) 996-4400

Laboratory Name: KSMRON Address: 151 STARLITE DR. MARIETTA, OH Contact: STEPHANE HUSSBURG

Project Name: LHAAP Project Location: KARNACK, TX

Project No.: 117591.0009BE30 Project Contact: Kay EVERETT Project Telephone No.: 713-996-4421

Point of Contact: Kay EVERETT Telephone No.: 713-996-4421

Project Manager/Supervisor: PRAVEEN SRINASIN

Analysis and Method Desired (Indicate separate containers): VOA

Item No.	Sample Telephone Number	Date	Time	Comp	Grab	Matrix	Sample Description, Location	Number of Containers	VOA	Remarks
1	LHSMW11-031506	3/15/06	9:30		✓	W	Groundwater Site 46	2	2	
2	LHSMW09-031506	3/15/06	11:30		✓	W	Groundwater Site 46	2	2	
3	TRIP BLANK				✓	W		2	2	
4										
5										
6										
7										
8										
9										
10										

Transfers Relinquished By (signature)	Date/Time	Transfers Accepted By (signature)	Date/Time
Stephane Hussburg	3/15/06 12:30		
		Laboratory	

Special Instructions: 7 DAY TAT

FedEx Airbill No.:

Sampler's Signature: Stephane Hussburg

TAT: ____ Standard ____ Rush Date ____ Seals Intact? ____ Y ____ N Received Good Condition ____ Y ____ N ____ Cold

White - Lab Copy Canary - Field Copy Pink - File Copy

Form Number: 433_1
Rev. 03-19-07

00078123

00078124

Shaw®

GROUNDWATER SAMPLING FORM

Sheet 1 of 2

Operable Unit/Site ID: 46WW02 Site46
Project Name/#: 117591.
Weather: Clear / 75°F

Sampling location ID: Site46
Sample ID: 46WW02
Collection Time/Date: 8:30 9/7/07

Pump Installation

Pump installation crew: Beesinger
PID/FID reading (well head/background):
Casing diameter (inches): 4"
Total well Depth (ft. BTOC): 47.75
Initial (pre-installation) DTW/time: 31.89
Final (after pump priming) DTW/time: —
Free product (circle): LNAPL / DNAPL
Volume of water removed during priming (mL): —
Discharge tube length (ft.): —

Installation date/beginning time: 9/7/07 7:30
Installation date/completion time: 9/7/07 7:45
Screen Interval (ft. BTOC): 37.75 to 47.75
Pump intake depth (ft BTOC): 42.75
Post-installation DTW/time: 31.77
Max. sustainable pump rate (mL/min): —
Appearance of product: NA
Discharge tube diameter (3/8" or 1/4"): —
Inlet reducer used (Y/N): N

Pneumatic Controller Tuning:
Initial air pressure = H (ft.) X 0.43 = _____ psi

	Initial	2	3	4	5	6	7	8	Final
Pressure (psi)									
Refill Setting									
Discharge Setting									
Flow rate (mL/min)									

Purging

Purging/sampling crew: Beesinger
Purge date/beginning time: ~~31.77~~ 9/7/07 8:47
Initial (pre-purging) DTW (ft. BTOC): 31.77
Calculated tubing + pump volume: NA

PID/FID reading (well head/background): —
Purge date/completion time: 9/7/07 8:30
Final (post-purging) DTW (ft. BTOC):
No. of tubing + pump volumes purged:

Pneumatic Controller Tuning:
Initial air pressure = H (ft.) X 0.43 = _____ psi

	Initial	2	3	4	5	6	7	8	Final
Pressure (psi)	40								
Refill Setting	40								
Discharge Setting	37								
Flow rate (mL/min)	150								

Water Quality Parameter Measurements

Time	DTW (ft. BTOC)	Purge Rate (mL/min)	Cumulative Volume Purged (L)	Temp. (degree C)	Electrical Conductivity (uMhos/cm)	pH	Eh (mv)	DO (mg/L)	Turbidity (NTU)
8:55	31.95	150	~~.750~~	22.12	.500	6.02	98.3	3.97	5.5
8:00	32.03	150	~~.300~~ .375	21.35	.493	5.20	76.4	2.12	4.9
8:05	32.05	150	1.500	20.98	.493	5.03	67.2	1.95	4.4
8:10	32.06	150	2.250	20.93	.502	4.96	64.5	1.80	5.6
8:15	32.07	150	3.000	20.90	.505	4.94	64.2	1.88	5.9
8:20	32.09	150	3.75	20.88	.509	4.93	63.5	1.90	5.7
8:25	32.10	150	4.500	20.91	.509	4.92	63.1	1.91	5.5
8:30	32.10	150	5.250	20.91	.509	4.92	63.4	1.92	5.4

GROUNDWATER SAMPLING FORM

Water Quality Parameter Measurements (continued)

Time	DTW (ft. BTOC)	Purge Rate (mL/min)	Cumulative Volume Purged (L)	Temp. (degree C) ± 10%	±3% Electrical Conductivity (uMhos/cm)	pH ± 0.1	Eh (mv) ± 10	DO (mg/L) ± 10%	Turbidity (NTU) ± 10% 10/20

Sampling

Sampling beginning time: 8:30 Sampling completion time: 8:45

Water Quality Parameter Measurements

Time	DTW (ft. BTOC)	Purge Rate (mL/min)	Cumulative Volume Purged (L)	Temp. (degree C)	Electrical Conductivity (uMhos/cm)	pH	Eh (mv)	DO (mg/L)	Turbidity (NTU)
830	32.10	150	5.25	20.91	0.509	4.92	63.4	1.92	5.4

Sample Information

Sample ID: 46WW02 Sample collection date/time: 9/7/07 8:30

Duplicate sample collected (Y/N): N Duplicate sample ID: \

Split sample collected (Y/N): N Split sample ID:

COC No(s):

Requested Analysis	Method	Containers	Requested Analysis	Method	Containers
TAL Metals filtered		1-500 ml plastic			
TAL Metals unfiltered		" " "			
Total Dissolved Solids		" " "			
Total Suspended Solids		" " "			

Comments:

Abbreviations: BTOC - Below top of casing; DTW - Depth to water; H - head above pump intake; mL - milliliter; L - Liter

00078126

Shaw®

GROUNDWATER SAMPLING FORM

Sheet 1 of 2

Operable Unit/Site ID: 46WW04 Site 46
Project Name/#: 117591.
Weather: Sunny / 82°F

Sampling location ID: Site 46
Sample ID: 46WW04
Collection Time/Date: 9/7/07 10:10

Pump Installation

Pump installation crew: Bleiger
PID/FID reading (well head/background):
Casing diameter (inches): 4"
Total well Depth (ft. BTOC): 27.00
Initial (pre-installation) DTW/time: 21.05
Final (after pump priming) DTW/time:
Free product (circle): LNAPL / DNAPL
Volume of water removed during priming (mL): —
Discharge tube length (ft.): —

Installation date/beginning time: 9/7/07 9:05
Installation date/completion time: 9/7/07 9:15
Screen Interval (ft. BTOC): 17.00 to 27.00
Pump intake depth (ft BTOC): 24.00
Post-installation DTW/time: 20.94
Max. sustainable pump rate (mL/min): 100
Appearance of product: None
Discharge tube diameter (3/8" or 1/4"): —
Inlet reducer used (Y/N): N

Pneumatic Controller Tuning:
Initial air pressure = H (ft.) X 0.43 = _____ psi

	Initial	2	3	4	5	6	7	8	Final
Pressure (psi)									
Refill Setting									
Discharge Setting									
Flow rate (mL/min)									

Purging

Purging/sampling crew: Bleiger
Purge date/beginning time: 9/7/07 9:20
Initial (pre-purging) DTW (ft. BTOC): 20.94
Calculated tubing + pump volume: NA

PID/FID reading (well head/background):
Purge date/completion time: 9/7/07 10:10
Final (post-purging) DTW (ft. BTOC):
No. of tubing + pump volumes purged:

Pneumatic Controller Tuning:
Initial air pressure = H (ft.) X 0.43 = _____ psi

	Initial	2	3	4	5	6	7	8	Final
Pressure (psi)	38								
Refill Setting	38								
Discharge Setting	34								
Flow rate (mL/min)	100								

Water Quality Parameter Measurements

Time	DTW (ft. BTOC)	Purge Rate (mL/min)	Cumulative Volume Purged (L)	Temp. (degree C)	Electrical Conductivity (uMhos/cm)	pH	Eh (mv)	DO (mg/L)	Turbidity (NTU)
9:25	21.05	100	~~0.0~~ 0.	23.22	2.45	5.90	24.5	3.89	63.0
9:30	21.11	100	~~0.5~~ 0.5	22.27	4.69	6.01	21.8	1.42	54.4
9:35	21.20	100	~~1.0~~ 1.0	22.16	4.71	6.06	22.7	1.02	53.1
9:40	21.30	100	~~1.5~~ 1.5	22.40	4.71	6.08	24.3	.93	42.2
9:45	21.35	100	~~2.0~~ 2.0	21.93	4.74	6.09	25.6	.72	35.7
9:50	21.39	100	~~2.5~~ 2.5	21.48	4.71	6.08	25.7	.63	21.4
9:55	21.45	100	~~3.0~~ 3.0	21.38	4.70	6.08	25.4	.58	9.8
10:00	21.48	100	~~3.5~~ 3.5	21.37	4.69	6.09	25.0	.55	8.0

00078127

GROUNDWATER SAMPLING FORM

Sheet 2 of 2

46WW04

Water Quality Parameter Measurements (continued)

Time	DTW (ft. BTOC)	Purge Rate (mL/min)	Cumulative Volume Purged (L)	Temp. (degree C) ± 10%	±3% Electrical Conductivity (uMhos/cm)	pH ± 0.1	Eh (mv) ± 10	DO (mg/L) ± 10%	Turbidity (NTU) ± 10%
10:05	21.53	100	19.0	21.35	4.68	6.10	25.1	.53	7.5
10:10	21.57	100	20	21.37	4.68	6.10	24.9	.52	7.2

10/20

Sampling

Sampling beginning time: 10:10

Sampling completion time: 10:30

Water Quality Parameter Measurements

Time	DTW (ft. BTOC)	Purge Rate (mL/min)	Cumulative Volume Purged (L)	Temp. (degree C)	Electrical Conductivity (uMhos/cm)	pH	Eh (mv)	DO (mg/L)	Turbidity (NTU)
10:10	21.57	100	20	21.37	4.68	6.10	24.9	.52	7.2

Sample Information

Sample ID: 46WW04

Sample collection date/time: 9/7/07 10:10

Duplicate sample collected (Y/N): N

Duplicate sample ID: —

Split sample collected (Y/N): N

Split sample ID: —

COC No(s):

Requested Analysis	Method	Containers	Requested Analysis	Method	Containers
TAL Metals filtered		1-500ml plastic			
TAL metals unfiltered		" " "			
Total Dissolved Solids		" " "			
Total Suspended Solids		" " "			

Comments:

Abbreviations: BTOC - Below top of casing; DTW - Depth to water; H - head above pump intake; mL - milliliter; L - Liter

00078128

Shaw®

GROUNDWATER SAMPLING FORM

Sheet 1 of 2

Operable Unit/Site ID: LHSMW11 Site 46
Project Name/#: 117591
Weather: SUNNY / 85°F

Sampling location ID: Site 46
Sample ID: LHSMW11
Collection Time/Date: 9/7/07 12:20

Pump Installation

Pump installation crew: Bee Singer
PID/FID reading (well head/background):
Casing diameter (inches): 4"
Total well Depth (ft. BTOC): 27.75
Initial (pre-installation) DTW/time: 22.75
Final (after pump priming) DTW/time:
Free product (circle): LNAPL / DNAPL
Volume of water removed during priming (mL): —
Discharge tube length (ft.): —

Installation date/beginning time: 9/7/07 10:35
Installation date/completion time: 9/7/07 10:50
Screen Interval (ft. BTOC): 17.75 to 27.75
Pump intake depth (ft BTOC): 25.25
Post-installation DTW/time: 22.63
Max. sustainable pump rate (mL/min): 100
Appearance of product: N
Discharge tube diameter (3/8" or 1/4"): —
Inlet reducer used (Y/N): N

Pneumatic Controller Tuning:
Initial air pressure = H (ft.) X 0.43 = _____ psi

	Initial	2	3	4	5	6	7	8	Final
Pressure (psi)									
Refill Setting									
Discharge Setting									
Flow rate (mL/min)									

Purging

Purging/sampling crew: Bee Singer
Purge date/beginning time: ~~10:50~~ 9/7/07 10:50
Initial (pre-purging) DTW (ft. BTOC):
Calculated tubing + pump volume: NA

PID/FID reading (well head/background): —
Purge date/completion time: 9/9/07 12:20
Final (post-purging) DTW (ft. BTOC): 23.55
No. of tubing + pump volumes purged: —

Pneumatic Controller Tuning:
Initial air pressure = H (ft.) X 0.43 = _____ psi

	Initial	2	3	4	5	6	7	8	Final
Pressure (psi)	30								
Refill Setting	30								
Discharge Setting	25								
Flow rate (mL/min)	100								

Water Quality Parameter Measurements

Time	DTW (ft. BTOC)	Purge Rate (mL/min)	Cumulative Volume Purged (L)	Temp. (degree C)	Electrical Conductivity (uMhos/cm)	pH	Eh (mv)	DO (mg/L)	Turbidity (NTU)
11:00	22.83	100	~~100~~ 0	24.24	5.36	6.26	14.9	3.27	240.8
11:05	22.95	100	~~200~~ 0.5	23.23	5.36	6.25	12.8	1.00	184.9
11:10	23.07	100	~~300~~ 1.0	22.91	5.36	6.28	19.3	.71	137.3
11:15	23.15	100	~~400~~ 1.5	22.89	5.37	6.29	22.6	.70	123.2
11:20	23.21	100	~~500~~ 2.0	22.84	5.36	6.29	25.0	.73	83.1
11:25	23.28	100	~~600~~ 2.5	22.52	5.37	6.30	27.2	.75	80.6
11:30	23.30	100	~~700~~ 3.0	22.70	5.36	6.30	26.9	.87	75.2
11:35	23.33	100	~~800~~ 3.5	22.90	5.37	6.33	25.4	.93	72.1

00078129

Shaw

GROUNDWATER SAMPLING FORM

LHSMW 11

Water Quality Parameter Measurements (continued)

Time	DTW (ft. BTOC)	Purge Rate (mL/min)	Cumulative Volume Purged (L)	Temp. (degree C) ± 10%	±3% Electrical Conductivity (uMhos/cm)	pH ± 0.1	Eh (mv) ± 10	DO (mg/L) ± 10%	Turbidity (NTU) ± 10% 10/20
11:40	23.35	100	4.0	23.10	5.40	6.34	24.2	1.63	70.5
11:45	23.38	100	4.5	23.21	5.42	6.36	23.9	2.06	68.3
11:50	23.40	100	5.0	23.25	5.41	6.33	19.9	2.15	65.2
11:55	23.42	100	5.5	23.28	5.41	6.32	19.4	2.69	40.3
12:00	23.45	100	6.0	23.28	5.40	6.32	19.8	2.74	35.6
12:05	23.47	100	6.5	23.30	5.39	6.32	21.1	2.66	17.6
12:10	23.49	100	7.0	23.32	5.39	6.31	21.7	2.64	17.5
12:15	23.53	100	7.5	23.33	5.40	6.31	21.5	2.67	17.1
12:20	23.55	100	8.0	23.33	5.41	6.31	21.8	2.69	17.0

Sampling

Sampling beginning time: 12:20 Sampling completion time: 12:40

Water Quality Parameter Measurements

Time	DTW (ft. BTOC)	Purge Rate (mL/min)	Cumulative Volume Purged (L)	Temp. (degree C)	Electrical Conductivity (uMhos/cm)	pH	Eh (mv)	DO (mg/L)	Turbidity (NTU)
1220	23.53	100		23.33	5.41	6.31	21.8	2.69	17.0

Sample Information

Sample ID: LHSmw11-090709 Sample collection date/time: 9/7/07 12:20

Duplicate sample collected (Y/N): N Duplicate sample ID: —

Split sample collected (Y/N): N Split sample ID: —

COC No(s):

Requested Analysis	Method	Containers	Requested Analysis	Method	Containers
TAL metals filtered		1-500 ml plastic			
TAL metals unfiltered		" " "			
Total Dissolved Solids		" " "			
Total Suspended Solids		" " "			

Comments:

Abbreviations: BTOC - Below top of casing; DTW - Depth to water; H - head above pump intake; mL - milliliter; L - Liter

00078130

Shaw®

GROUNDWATER SAMPLING FORM

Sheet 1 of 2

Operable Unit/Site ID: Longhorn AAP LHAAP-46
Project Name/#: LHAAP
Weather: rain, pty. cloudy 70s

Sampling location ID: LHSMW-14
Sample ID: LHSMW~~14~~ 091007
Collection Time/Date: 13:38 9/10/07

Pump Installation

Pump installation crew: A. Willmore / M. Martinez
PID/FID reading (well head/background): 0.0
Casing diameter (inches): 4"
Total well Depth (ft. BTOC): 20.39
Initial (pre-installation) DTW/time: 13.43
Final (after pump priming) DTW/time: NA
Free product (circle): LNAPL / DNAPL
Volume of water removed during priming (mL):
Discharge tube length (ft.): 20'

Installation date/beginning time: 9/10/07 12:20
Installation date/completion time: 9/10/07 12:25
Screen Interval (ft. BTOC): 10.39 to 20.39
Pump intake depth (ft BTOC): ~15
Post-installation DTW/time: 13.39
Max. sustainable pump rate (mL/min): 200
Appearance of product: None
Discharge tube diameter (3/8" or 1/4"): 1/4"
Inlet reducer used (Y/N): No

Pneumatic Controller Tuning:
Initial air pressure = H (ft.) X 0.43 = NR psi

	Initial	2	3	4	5	6	7	8	Final
Pressure (psi)									
Refill Setting									
Discharge Setting									
Flow rate (mL/min)									

9/10/2007

Purging

Purging/sampling crew: A. Willmore, M. Martinez
Purge date/beginning time: 9/10/07 12:40
Initial (pre-purging) DTW (ft. BTOC): 13.39
Calculated tubing + pump volume: NA

PID/FID reading (well head/background): 0.0
Purge date/completion time: 9/10/07
Final (post-purging) DTW (ft. BTOC): 13.89
No. of tubing + pump volumes purged:

Pneumatic Controller Tuning:
Initial air pressure = H (ft.) X 0.43 = NR psi

	Initial	2	3	4	5	6	7	8	Final
Pressure (psi)	20								20
Refill Setting	13								13
Discharge Setting	3								3
Flow rate (mL/min)	200								200

Water Quality Parameter Measurements

Time	DTW (ft. BTOC)	Purge Rate (mL/min)	Cumulative Volume Purged (L)	Temp. (degree C)	Electrical Conductivity (uMhos/cm)	pH	Eh (mv)	DO (mg/L)	Turbidity (NTU)
12:40	13.86	200	1	21.00	0.104	5.34	~~0.106~~ 101.7	0.91	27.0
12:45	13.86	200	2	21.00	0.106	5.33	~~0.106~~ 101.5	0.87	24.9
12:50	13.86	200	3	21.03	0.105	5.34	101.1	0.88	23.10
12:55	13.86	200	4	21.03	0.105	5.36	100.8	0.89	20.00
13:00	13.86	200	5	20.01	0.104	5.36	99.9	0.96	15.1
13:05	13.86	200	6	20.96	0.104	5.38	99.4	1.0[illegible]	11.2
13:10	13.86	200	7	20.94	0.103	5.39	94.4	1.03	9.6
13:15	13.86	200	8	21.11	0.102	5.44	94.8	1.05	8.7

LHS00078131 091007

GROUNDWATER SAMPLING FORM

Sheet 2 of 2

Water Quality Parameter Measurements (continued)

Time	DTW (ft. BTOC)	Purge Rate (mL/min)	Cumulative Volume Purged (L)	Temp. (degree C) ± 10%	±3% Electrical Conductivity (uMhos/cm)	pH ± 0.1	Eh (mv) ± 10	DO (mg/L) ± 10%	Turbidity (NTU) ± 10% 10/20
13:20	13.86	200	9	20.96	1.09	5.43	94.0	1.09	7.8
				~~22.60~~					

Sampling

Sampling beginning time: 13:30 Sampling completion time: 13:50

Water Quality Parameter Measurements

Time	DTW (ft. BTOC)	Purge Rate (mL/min)	Cumulative Volume Purged (L)	Temp. (degree C)	Electrical Conductivity (uMhos/cm)	pH	Eh (mv)	DO (mg/L)	Turbidity (NTU)
13:50	13.86	200	15	21.69	0.980	5.51	89.2	1.54	9.3

Sample Information

Sample ID: LHSMW14-091007 Sample collection date/time: 9/10/07

Duplicate sample collected (Y/N): NO Duplicate sample ID: None

Split sample collected (Y/N): No Split sample ID: None

COC No(s):

Requested Analysis	Method	Containers	Requested Analysis	Method	Containers
TAL METALS - FILT.	6020B	1-500 mL plastic			
TAL METALS - UNFILT.	6020B	1-500 mL plastic			
TDS		1-500 mL plastic			
TSS		1-500 mL plastic			

Comments:

Abbreviations: BTOC - Below top of casing; DTW - Depth to water; H - head above pump intake; mL - milliliter; L - Liter

00078132

Shaw®

GROUNDWATER SAMPLING FORM

Sheet 1 of 2

Operable Unit/Site ID: Longhorn AAP LHAAP-46
Project Name/#: LHAAP
Weather: rain, pctly cloudy 70s

Sampling location ID: LHSMW-15
Sample ID: LHSMW07 091007
Collection Time/Date: 13:30 9/10/07

Pump Installation

Pump installation crew: A. Willmore / M. Martinez
PID/FID reading (well head/background): 0.0
Casing diameter (inches): 4"
Total well Depth (ft. BTOC): 25.15
Initial (pre-installation) DTW/time: 21.43
Final (after pump priming) DTW/time: ~~21.38~~ NA
Free product (circle): LNAPL / DNAPL
Volume of water removed during priming (mL): NA
Discharge tube length (ft.): 17'

Installation date/beginning time: 9/10/07 14:48
Installation date/completion time: 9/10/07 1458
Screen Interval (ft. BTOC): 15.15 to 25.15
Pump intake depth (ft BTOC): ~24'
Post-installation DTW/time: 21.31
Max. sustainable pump rate (mL/min): 100
Appearance of product: None
Discharge tube diameter (3/8" or 1/4"): 1/4"
Inlet reducer used (Y/N): No

Pneumatic Controller Tuning:
Initial air pressure = H (ft.) X 0.43 = NR psi

	Initial	2	3	4	5	6	7	8	Final
Pressure (psi)									
Refill Setting									
Discharge Setting									
Flow rate (mL/min)									

Purging

Purging/sampling crew: A. Willmore / M. Martinez
Purge date/beginning time: 9/10/07 14:55
Initial (pre-purging) DTW (ft. BTOC): 21.31
Calculated tubing + pump volume: NA

PID/FID reading (well head/background): 0.0
Purge date/completion time: 9/10/07
Final (post-purging) DTW (ft. BTOC): 22.20
No. of tubing + pump volumes purged: NR

Pneumatic Controller Tuning:
Initial air pressure = H (ft.) X 0.43 = NR psi

	Initial	2	3	4	5	6	7	8	Final
Pressure (psi)	17								17
Refill Setting	14								14
Discharge Setting	2.6								2.6
Flow rate (mL/min)	160								100

Water Quality Parameter Measurements

Time	DTW (ft. BTOC)	Purge Rate (mL/min)	Cumulative Volume Purged (L)	Temp. (degree C)	Electrical Conductivity (uMhos/cm)	pH	Eh (mv)	DO (mg/L)	Turbidity (NTU)
1500	21.75	~~200~~	0.0	21.88	0.125	5.87	93.5	0.77	198.9
1505	22.11	150	1.75	MISSED READINGS					
1510	22.22	100	2.25	21.45	7.502	5.93	100.0	0.66	78.6
15:15	22.22	100	2.75	21.56	7.502	5.94	100.9	0.67	82.2
15:20	22.20	100	3.25	22.03	7.516	5.97	102.6	0.64	76.7
15:25	22.20	100	3.75	22.56	7.527	5.95	100.2	0.62	70.8
15:30	22.20	100	4.25	22.87	7.532	5.94	99.2	0.61	66.6
15:35	22.20	100	4.75	23.38	7.544	5.95	103.7	0.59	60.0

LH 00078133007

GROUNDWATER SAMPLING FORM

Sheet 2 of 2

Water Quality Parameter Measurements (continued)

Time	DTW (ft. BTOC)	Purge Rate (mL/min)	Cumulative Volume Purged (L)	Temp. (degree C) ± 10%	±3% Electrical Conductivity (uMhos/cm)	pH ± 0.1	Eh (mv) ± 10	DO (mg/L) ± 10%	Turbidity (NTU) ± 10% 10/20

9/10/07

Sampling

Sampling beginning time: 15:45 Sampling completion time: 16:05

Water Quality Parameter Measurements

Time	DTW (ft. BTOC)	Purge Rate (mL/min)	Cumulative Volume Purged (L)	Temp. (degree C)	Electrical Conductivity (uMhos/cm)	pH	Eh (mv)	DO (mg/L)	Turbidity (NTU)
16:15	22.20	100	~102 (Ka)	23.01	7.658	6.29	105.7	0.60	39.9

Sample Information

Sample ID: LHSMW15-

Sample collection date/time: 15:45 9/10/07

Duplicate sample collected (Y/N): No

Duplicate sample ID: No

Split sample collected (Y/N): No

Split sample ID: No

COC No(s):

Requested Analysis	Method	Containers	Requested Analysis	Method	Containers
TAL METALS-FIH	6020 B	1-500 mL plastic			
TAL METALS-UNFIL	6020 B	1-500 mL plastic			
TDS		1-500 mL plastic			
TSS		1-500 mL plastic			

Comments: TURBIDITY NOT DROPPING SIGNIFICANTLY

Abbreviations: BTOC - Below top of casing; DTW - Depth to water; H - head above pump intake; mL - milliliter; L - Liter

00078134

Shaw®

GROUNDWATER SAMPLING FORM

Sheet 1 of 2

Operable Unit/Site ID: LHSMW-19
Project Name/#: 117591. LHNAP
Weather: cloudy / 70s

Sampling location ID: SITE 46
Sample ID: LHSMW19-091107
Collection Time/Date: 0820 09/11/07

Pump Installation

Pump installation crew: A. Willmore / M. Martinez
PID/FID reading (well head/background): 0.0
Casing diameter (inches): 4"
Total well Depth (ft. BTOC): 30.00
Initial (pre-installation) DTW/time: 21.28
Final (after pump priming) DTW/time: NA
Free product (circle): LNAPL / DNAPL
Volume of water removed during priming (mL): NA
Discharge tube length (ft.): 28'

Installation date/beginning time: 9/11/07 7:36
Installation date/completion time: 9/11/07 7:38
Screen Interval (ft. BTOC): 20 to 30
Pump intake depth (ft BTOC): 25'
Post-installation DTW/time: 21.38
Max. sustainable pump rate (mL/min): 120
Appearance of product: None
Discharge tube diameter (3/8" or 1/4"): 1/4
Inlet reducer used (Y/N): No

Pneumatic Controller Tuning:
Initial air pressure = H (ft.) X 0.43 = NR psi

	Initial	2	3	4	5	6	7	8	Final
Pressure (psi)									
Refill Setting									
Discharge Setting									
Flow rate (mL/min)						9/11/07			

Purging

Purging/sampling crew: A. Willmore / M. Martinez
Purge date/beginning time: 9/11/07 0740
Initial (pre-purging) DTW (ft. BTOC): 21.38
Calculated tubing + pump volume: NA

PID/FID reading (well head/background): 0.0
Purge date/completion time: 9/11/07
Final (post-purging) DTW (ft. BTOC): '
No. of tubing + pump volumes purged: NR

Pneumatic Controller Tuning:
Initial air pressure = H (ft.) X 0.43 = NR psi

	Initial	2	3	4	5	6	7	8	Final
Pressure (psi)	29								29
Refill Setting	12								12
Discharge Setting	3								3
Flow rate (mL/min)	120								120

Water Quality Parameter Measurements

Time	DTW (ft. BTOC)	Purge Rate (mL/min)	Cumulative Volume Purged (L)	Temp. (degree C)	Electrical Conductivity (uMhos/cm)	pH	Eh (mv)	DO (mg/L)	Turbidity (NTU)
0750	21.63	120	~~0.72~~ 0	21.50	1.605	7.06	96.5	1.40	1.3
0800	21.63	120	~~1.44~~ 1.2	21.30	1.514	6.42	96.6	0.75	0.0
0805	21.63	120	~~2.16~~ 1.8	21.32	1.508	6.32	95.8	0.60	0.0
0810	21.63	120	~~4.68~~ 2.4	21.30	1.496	6.22	96.1	0.56	0.0
0815	21.63	120	~~6.76~~ 3.0	21.29	1.494	6.19	96.0	0.54	0.0

LH 00078135
091107

GROUNDWATER SAMPLING FORM

Sheet 2 of 2

Shaw®

Water Quality Parameter Measurements (continued)

Time	DTW (ft. BTOC)	Purge Rate (mL/min)	Cumulative Volume Purged (L)	Temp. (degree C) ± 10%	Electrical Conductivity (uMhos/cm) ±3%	pH ± 0.1	Eh (mv) ± 10	DO (mg/L) ± 10%	Turbidity (NTU) ± 10% 10/20

9/11/07

Sampling

Sampling beginning time: 0820 Sampling completion time: 0830

Water Quality Parameter Measurements

Time	DTW (ft. BTOC)	Purge Rate (mL/min)	Cumulative Volume Purged (L)	Temp. (degree C)	Electrical Conductivity (uMhos/cm)	pH	Eh (mv)	DO (mg/L)	Turbidity (NTU)
0836	21.69	120	~~162.2~~ 162	21.47	1.480	6.13	95.2	2.55	0.0

Sample Information

Sample ID: LHSMW9-091107 Sample collection date/time: 9/11/0

Duplicate sample collected (Y/N): No Duplicate sample ID: No

Split sample collected (Y/N): No Split sample ID: No

COC No(s):

Requested Analysis	Method	Containers	Requested Analysis	Method	Containers
TAL METALS - FILT	6020 B	1 - 500 mL plastic			
TAL METAL - UNFILT	6020 B	1 - 500 mL plastic			
TSS		1 - 500 mL plastic			
TDS		1 - 500 mL plastic			

Comments:

Abbreviations: BTOC - Below top of casing; DTW - Depth to water; H - head above pump intake; mL - milliliter; L - Liter

00078136

GROUNDWATER SAMPLING FORM

Sheet 1 of 3

Operable Unit/Site ID: LHAAP-41
Project Name/#: 117591 LHAAP
Weather: Cloudy 70s

Sampling location ID: LHSMW-22
Sample ID: LHSMW22-091107
Collection Time/Date:

Pump Installation

Pump installation crew: Alex Willmore / M. Martinez
PID/FID reading (well head/background): 0.0
Casing diameter (inches): 4"
Total well Depth (ft. BTOC): 28.97
Initial (pre-installation) DTW/time: 25.54
Final (after pump priming) DTW/time: NA
Free product (circle): LNAPL / DNAPL
Volume of water removed during priming (mL): NA
Discharge tube length (ft.): NA

Installation date/beginning time: 9/11/07 9:07
Installation date/completion time: 9/11/07 9:09
Screen Interval (ft. BTOC): 19 to 29
Pump intake depth (ft BTOC): ~28'
Post-installation DTW/time: 25.41
Max. sustainable pump rate (mL/min): 100
Appearance of product: None
Discharge tube diameter (3/8" or 1/4"): 1/4"
Inlet reducer used (Y/N): No

Pneumatic Controller Tuning:
Initial air pressure = H (ft.) X 0.43 = NA psi

	Initial	2	3	4	5	6	7	8	Final
Pressure (psi)									
Refill Setting									
Discharge Setting									
Flow rate (mL/min)									

Purging

Purging/sampling crew: A. Willmore / M. Martinez
Purge date/beginning time: 9/11/07 0914
Initial (pre-purging) DTW (ft. BTOC): 25.41
Calculated tubing + pump volume: NA

PID/FID reading (well head/background): 0.0
Purge date/completion time: 9/11/07
Final (post-purging) DTW (ft. BTOC): NA
No. of tubing + pump volumes purged: NA

Pneumatic Controller Tuning:
Initial air pressure = H (ft.) X 0.43 = NA psi

	Initial	2	3	4	5	6	7	8	Final
Pressure (psi)	20								20
Refill Setting	14								14
Discharge Setting	3								3
Flow rate (mL/min)	100								100

Water Quality Parameter Measurements

Time	DTW (ft. BTOC)	Purge Rate (mL/min)	Cumulative Volume Purged (L)	Temp. (degree C)	Electrical Conductivity (uMhos/cm)	pH	Eh (mv)	DO (mg/L)	Turbidity (NTU)
09:19									
~~25.55~~ 25.56	25.56	100	~~0.5~~ 0	21.64	8.528	5.81	96.2	12.1	21.6
09:24	25.58	100	~~1~~ 0.5	20.90	8.699	5.72	96.5	0.41	10.5
09:29	25.58	100	~~1.5~~ 1.0	20.78	8.697	5.72	96.6	0.40	10.1
09:34	25.58	100	~~2.0~~ 1.5	20.80	8.716	5.70	98.2	0.35	7.6
09:39	25.58	100	~~2.5~~ 2.0	20.79	8.715	5.70	98.3	0.35	5.7
09:44	25.58	100	~~3.0~~ 2.5	20.70	8.725	5.70	99.3	0.32	6.1

LH S00078137
091107

GROUNDWATER SAMPLING FORM

Sheet 2 of 2

Water Quality Parameter Measurements (continued)

Time	DTW (ft. BTOC)	Purge Rate (mL/min)	Cumulative Volume Purged (L)	Temp. (degree C) ± 10%	±3% Electrical Conductivity (uMhos/cm)	pH ± 0.1	Eh (mv) ± 10	DO (mg/L) ± 10%	Turbidity (NTU) ± 10% 10/20

9/11/07

Sampling

Sampling beginning time: 0950 Sampling completion time: 10:10

Water Quality Parameter Measurements

Time	DTW (ft. BTOC)	Purge Rate (mL/min)	Cumulative Volume Purged (L)	Temp. (degree C)	Electrical Conductivity (uMhos/cm)	pH	Eh (mv)	DO (mg/L)	Turbidity (NTU)
10:22	25.58	100	~~10~~ 2	20.87	8.765	5.73	100.4	0.35	0.0

Sample Information

Sample ID: LHSMW22-091107
Sample collection date/time: 9/11/07 0950
Duplicate sample collected (Y/N): No
Duplicate sample ID: NA
Split sample collected (Y/N): No
Split sample ID: NA
COC No(s):

Requested Analysis	Method	Containers	Requested Analysis	Method	Containers
TAL METALS-FILT	6020B	1-500 mL plastic			
TAL METALS-UNFILT	6020B	1-500 mL plastic			
TDS		1-500 mL plastic			
TSS		1-500 mL plastic			

Comments:

Abbreviations: BTOC - Below top of casing; DTW - Depth to water; H - head above pump intake; mL - milliliter; L - Liter

00078138

Shaw®

GROUNDWATER SAMPLING FORM

Sheet 1 of 2

Operable Unit/Site ID: LHAAP-46
Project Name/#: LHAAP / 117591
Weather: cloudy, 70s

Sampling location ID: LHSMW23
Sample ID: LHSMW23-091107
Collection Time/Date: 1335 9/11/07

Pump Installation

Pump installation crew: A. Willmore / M. Martinez
PID/FID reading (well head/background): 0.0
Casing diameter (inches): 4"
Total well Depth (ft. BTOC): 42.20
Initial (pre-installation) DTW/time: 27.09
Final (after pump priming) DTW/time: NA
Free product (circle): LNAPL / DNAPL
Volume of water removed during priming (mL): NA
Discharge tube length (ft.): 40'

Installation date/beginning time: 9/11/07
Installation date/completion time: 9/11/07
Screen Interval (ft. BTOC): 32.2 to 42.2
Pump intake depth (ft BTOC): 37'
Post-installation DTW/time: 27.04
Max. sustainable pump rate (mL/min): 160
Appearance of product: No
Discharge tube diameter (3/8" or 1/4"): 1/4"
Inlet reducer used (Y/N): No

Pneumatic Controller Tuning:
Initial air pressure = H (ft.) X 0.43 = NR psi

	Initial	2	3	4	5	6	7	8	Final
Pressure (psi)									
Refill Setting									
Discharge Setting									
Flow rate (mL/min)									

M. Willmore 9/11/07

Purging

Purging/sampling crew: A. Willmore / M. Martinez
Purge date/beginning time: 9/11/07
Initial (pre-purging) DTW (ft. BTOC): 27.04
Calculated tubing + pump volume: NA

PID/FID reading (well head/background): 0.0
Purge date/completion time: 9/11/07
Final (post-purging) DTW (ft. BTOC): 27.13
No. of tubing + pump volumes purged: NA

Pneumatic Controller Tuning:
Initial air pressure = H (ft.) X 0.43 = NR psi

	Initial	2	3	4	5	6	7	8	Final
Pressure (psi)	30								30
Refill Setting	10								10
Discharge Setting	5								5
Flow rate (mL/min)	160								160

Water Quality Parameter Measurements

Time	DTW (ft. BTOC)	Purge Rate (mL/min)	Cumulative Volume Purged (L)	Temp. (degree C)	Electrical Conductivity (uMhos/cm)	pH	Eh (mv)	DO (mg/L)	Turbidity (NTU)
12:12	27.13	160	~~0.8~~ 0	20.50	5.463	5.94	96.1	0.93	110.3
12:17	27.13	160	~~1.6~~ 0.8	20.38	5.424	5.87	97.3	0.60	125.0
12:22	27.13	160	~~2.4~~ 1.6	20.36	5.408	5.88	98.6	0.38	166.4
12:32	27.13	160	3.2	20.36	5.3628	5.93	100.1	0.25	151.3
1237	27.13	160	4.0	20.33	5.362	5.94	100.1	0.24	126.1
1242	27.13	160	4.8	20.27	5.348	5.94	101.1	0.34	107.6
1247	27.13	160	5.6	20.29	5.341	5.94	100.8	0.23	159.4
12:53	27.13	160	6.4	20.35	5.339	5.94	100.7	0.42	95.1

~~000781139~~
091107

GROUNDWATER SAMPLING FORM

Sheet 1 of 2

Water Quality Parameter Measurements (continued)

Time	DTW (ft. BTOC)	Purge Rate (mL/min)	Cumulative Volume Purged (L)	Temp. (degree C) ± 10%	±3% Electrical Conductivity (uMhos/cm)	pH ± 0.1	Eh (mv) ± 10	DO (mg/L) ± 10%	Turbidity (NTU) ± 10% 10/20
12:58	27.13	160	7.2	20.42	5.334	5.93	100.8	0.29	83.2
13:03	27.13	160	8.0	20.44	5.334	5.93	100.7	0.23	74.9
13:08	27.13	160	8.8	20.45	5.330	5.93	100.8	0.21	71.7
13:13	27.13	160	9.6	20.45	5.326	5.93	101.1	0.21	70.2
13:18	27.13	160	10.4	20.40	5.326	5.93	101.1	0.20	66.4
13:28	27.13	160	12.0	20.43	5.324	5.93	101.6	0.19	55.7

9/11/07

Sampling

Sampling beginning time: 13:35 Sampling completion time: 13:50

Water Quality Parameter Measurements

Time	DTW (ft. BTOC)	Purge Rate (mL/min)	Cumulative Volume Purged (L)	Temp. (degree C)	Electrical Conductivity (uMhos/cm)	pH	Eh (mv)	DO (mg/L)	Turbidity (NTU)
13:55	27.13	160	~~16.0~~ 2.4	20.39	5.341	6.16	102.1	0.22	44.6

Sample Information

Sample ID: LHSMW23-091107
Sample collection date/time: 9/11/07
Duplicate sample collected (Y/N): No
Duplicate sample ID: NA
Split sample collected (Y/N): No
Split sample ID: NA
COC No(s): NR

Requested Analysis	Method	Containers	Requested Analysis	Method	Containers
TAL METALS - Unfilt	6020B	1 - 500 mL plastic			
TAL METALS - Filtered	6020B	1 - 500 mL plastic			
TDS		1 - 500 mL plastic			
TSS		1 - 500 mL plastic			

Comments:

Abbreviations: BTOC - Below top of casing; DTW - Depth to water; H - head above pump intake; mL - milliliter; L - Liter

GROUNDWATER SAMPLING FORM

Sheet 1 of 2

Operable Unit/Site ID: LHAAP-46
Project Name/#: LHAAP/117591
Weather: cloudy, 80s

Sampling location ID: LHSMW24
Sample ID: LHSMW24-091107
Collection Time/Date: 15:35 9/11/07

Pump Installation

Pump installation crew: A. Willmore / M. Martinez
PID/FID reading (well head/background): 0.0
Casing diameter (inches): 4"
Total well Depth (ft. BTOC): ~~42'~~ 28.85
Initial (pre-installation) DTW/time: 22.79
Final (after pump priming) DTW/time: NR
Free product (circle): LNAPL / DNAPL
Volume of water removed during priming (mL): NR
Discharge tube length (ft.): 29

Installation date/beginning time: 9/11/07 15:01
Installation date/completion time: 9/11/07 15:03
Screen Interval (ft. BTOC): 19 to 29
Pump intake depth (ft BTOC): ~26'
Post-installation DTW/time: 22.69
Max. sustainable pump rate (mL/min): 100
Appearance of product: None
Discharge tube diameter (3/8" or 1/4"): 1/4"
Inlet reducer used (Y/N): No

Pneumatic Controller Tuning:
Initial air pressure = H (ft.) X 0.43 = NR psi

	Initial	2	3	4	5	6	7	8	Final
Pressure (psi)									
Refill Setting									
Discharge Setting						9/11/07			
Flow rate (mL/min)									

Purging

Purging/sampling crew: A. Willmore / M. Martinez
Purge date/beginning time: 9/11/07 15:07
Initial (pre-purging) DTW (ft. BTOC): 22.69
Calculated tubing + pump volume: NA

PID/FID reading (well head/background): 0.0
Purge date/completion time: 9/11/07 15:29
Final (post-purging) DTW (ft. BTOC): 22.82
No. of tubing + pump volumes purged: NA

Pneumatic Controller Tuning:
Initial air pressure = H (ft.) X 0.43 = NR psi

	Initial	2	3	4	5	6	7	8	Final
Pressure (psi)	16								16
Refill Setting	10								10
Discharge Setting	5								5
Flow rate (mL/min)	100								100

Water Quality Parameter Measurements

Time	DTW (ft. BTOC)	Purge Rate (mL/min)	Cumulative Volume Purged (L)	Temp. (degree C)	Electrical Conductivity (uMhos/cm)	pH	Eh (mv)	DO (mg/L)	Turbidity (NTU)
15:14	22.82	100	0.5	22.52	9.868	6.52	90.1	1.02	0.0
15:19	22.82	100	1	21.97	9.866	6.48	89.9	0.67	0.0
15:24	22.82	100	1.5	21.96	9.857	6.47	92.1	0.66	0.0
15:29	22.82	100	2.0	22.00	9.862	6.48	94.1	0.63	0.0

000781421H-
091107

GROUNDWATER SAMPLING FORM

Sheet 2 of 2

Water Quality Parameter Measurements (continued)

Time	DTW (ft. BTOC)	Purge Rate (mL/min)	Cumulative Volume Purged (L)	Temp. (degree C) ± 10%	±3% Electrical Conductivity (uMhos/cm)	pH ± 0.1	Eh (mv) ± 10	DO (mg/L) ± 10%	Turbidity (NTU) ± 10%

9/11/07

10/20

Sampling

Sampling beginning time: 15:35 Sampling completion time: 16:05

Water Quality Parameter Measurements

Time	DTW (ft. BTOC)	Purge Rate (mL/min)	Cumulative Volume Purged (L)	Temp. (degree C)	Electrical Conductivity (uMhos/cm)	pH	Eh (mv)	DO (mg/L)	Turbidity (NTU)
16:10	22.82	100	8	22.76	9.973	6.53	163.6	1.63	0.0

Sample Information

Sample ID: LHSMW24-091107
Duplicate sample collected (Y/N): Yes
Split sample collected (Y/N): No
COC No(s):

Sample collection date/time: 15:35 9/11/07
Duplicate sample ID: LHSMW24-091107-FD
Split sample ID: NA

Requested Analysis	Method	Containers	Requested Analysis	Method	Containers
TAL METALS-FILT.	6020B	2 - 500 mL Plastic			
TAL METALS-UNFILT.	6020B	2 - 500 mL plastic			
TDS		2 - 500 mL plastic			
TSS		2 - 500 mL plastic			

Comments:

Abbreviations: BTOC - Below top of casing; DTW - Depth to water; H - head above pump intake; mL - milliliter; L - Liter

Chain of Custody

Shaw® Shaw Environmental & Infrastructure, Inc.
3010 Briarpark Drive, Suite 400
Houston, TX 77042
(713) 996-4900

LO70 9261
Due 9/27/07

NO. 10225

Laboratory Name: Kemron
Address: ~~156~~ 156 Starlite Marrietta, Ohio
Contact: Stephanie Mosburgh

Project Name: LONGHORN - PBC
Project Location: LHAAP-46
Project No.: 117591.
Project Contact: ALLEN WILMORE
Project Telephone No.: (713) 247-9292
Point of Contact: LARRY DUTY
Telephone No.: (713) 996-4547
Project Manager/Supervisor: Praveen Srivastav

Item No.	Sample ID ~~Telephone Number~~	Date	Time	Comp	Grab	Matrix	Sample Description, Location	Number of Containers	TAL metals (HNO3 unfiltered)	TAL metals (to be filtered)	TOTAL Dissolved Solids	TOTAL Suspended Solids				Remarks
1	46WW02-090707	9/7/07	8:30		✓	W	Groundwater, Site 46	4	1	1	1	1				
2	46WW04-090707	9/7/07	10:10		✓	W	Groundwater, Site 46	4	1	1	1	1				
3	LHSMW11-090707	9/7/07	12:20		✓	W	Groundwater, Site 46	4	1	1	1	1				
4	LHSMW14-091007	9/10/07	13:30		✓	W	Groundwater, Site 46	4	1	1	1	1				
5	LHSMW15-091007	9/10/07	1545		✓	W	Groundwater, Site 46	4	1	1	1	1				
6	LHSMW19-091107	9/11/07	0820		✓	W	Groundwater, Site 46	4	1	1	1	1				
7	LHSMW22-091107	9/11/07	09:50		✓	W	Groundwater, Site 46	4	1	1	1	1				
8	LHSMW23-091107	9/11/07	~~09:50~~ 13:35		✓	W	Groundwater, Site 46	4	1	1	1	1				Time Sampled = 09:50
9	LHSMW24-091107-FD	9/11/07	1535		✓	W	Groundwater, Site 46	4	1	1	1	1				Time Sampled = 13:35
10	LHSSMW24-091107	9/11/07	1535		✓	W	Groundwater, Site 46	4	1	1	1	1				Time Sampled = 15:35

Transfers Relinquished By (signature)	Date/Time	Transfers Accepted By (signature)	Date/Time
Scott Beesinger	9/7/07 1600	M. [illegible]	9/7/07 1600
M. [illegible]	9/12/07 1030		
		Laboratory Ann Elder	9-13-07 1100

Special Instructions:

FedEx Airbill No.:

Sampler's Signature: M. [illegible]

TAT: ____ Standard ____ Rush Date ____ Seals Intact? ____ Y ____ N Received Good Condition ____ Y ____ N ____ Cold

White - Lab Copy Canary - Field Copy Pink - File Copy

Form Number: 433_1
Rev. 03-19-07

00078142

WELL COMPLETION FORM (Stickup or Above Grade Completion Well)

FIELD REPRESENTATIVE: Allen Willmore

DRILLING CONTRACTOR: ETL

DRILLING TECHNIQUE: HSA

AUGER SIZE AND TYPE: 10"

BOREHOLE IDENTIFICATION: 46WW05

BOREHOLE DIAMETER: 10"

WELL IDENTIFICATION: 46WW05

WELL CONSTRUCTION START DATE: 9/26/08

WELL CONSTRUCTION COMPLETE DATE: 10/1/08

SCREEN MATERIAL: sch. 40 PVC

SCREEN DIAMETER: 4"

STRATUM-SCREENED INTERVAL (FT): 10

CASING MATERIAL: sch 40 PVC

CASING DIAMETER: 4"

TYPE OF FILTER PACK: 20/40 silica sand

GRADIATION: 20/40

AMOUNT OF FILTER PACK USED: 9 bags

TYPE OF BENTONITE: bentonite pellets

AMOUNT BENTONITE USED: 1-50lb bucket

TYPE OF CEMENT: Portland cement

AMOUNT CEMENT USED: ~5-6 96 lb bags

GROUT MATERIALS USED: grout

DIMENSIONS OF SECURITY CASING: 6"x6"

TYPE OF WELL CAP: plugging cap

TYPE OF END CAP: PVC

COMMENTS:

SPECIAL CONDITIONS
(describe and draw)

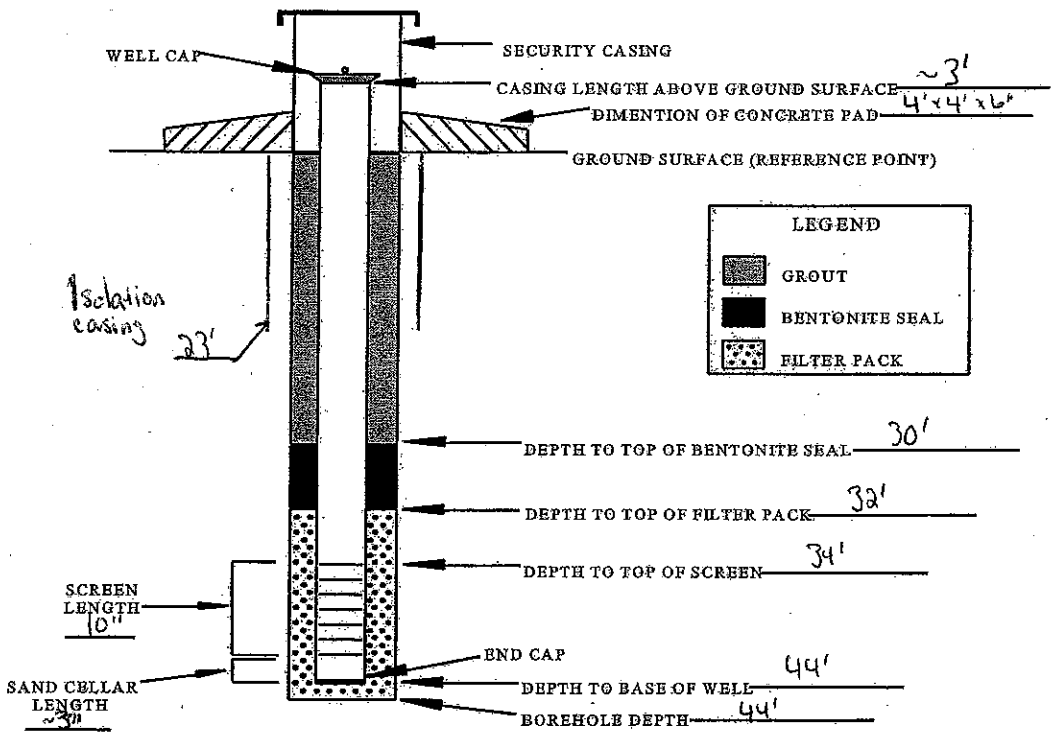

NOT TO SCALE

INSTALLED BY: Tommy Cook

INSTALLATION OBSERVED BY: Allen Willmore

DISCREPANCIES: none

00078144

HOLE NO. 46WW05

DRILLING LOG	DIVISION Federal	INSTALLATION LONGHORN AAP LHAAP - 46	SHEET 1 OF 3 SHEETS

1. PROJECT LHAAP	10. SIZE AND TYPE OF BIT 10" HSA, 19" Tri-con roller
2. LOCATION (Coordinates or Station) Karnack, Tx	11. DATUM FOR ELEVATION SHOWN (TBM or MSL) MSL
3. DRILLING AGENCY ETTL	12. MANUFACTURER'S DESIGNATION OF DRILL Foremost 5500 / Mayhew 500
4. HOLE NO. (As shown on drawing title and file number) 46WW05 —	13. OVERBURDEN SAMPLES DISTURBED — UNDISTURBED —
5. NAME OF DRILLER D. Hinds / T. Cook	14. TOTAL NUMBER CORE BOXES —
6. DIRECTION OF HOLE ☑ VERTICAL ☐ INCLINED 0° DEG. FROM VERT.	15. ELEVATION GROUND WATER TOC = 208.24
7. THICKNESS OF OVERBURDEN 44'	16. DATE HOLE STARTED 9/26/08 COMPLETED 10/1/08
8. DEPTH DRILLED INTO ROCK .0	17. ELEVATION TOP OF HOLE NA
9. TOTAL DEPTH OF HOLE 44'	18. TOTAL CORE RECOVERY FOR BORING 100 %
	A. Willmore INSPECTOR

ELEVATION a	DEPTH b	LEGEND c	CLASSIFICATION OF MATERIALS (Description) d	% CORE RECOVERY e	BOX OR SAMPLE NO. f	REMARKS (Drilling time, water loss, depth of weathering, etc., if significant) g
0.0			CLAY, SANDY, NO PLASTICITY, STIFF, BROWN, MOTTLING, DRY NO ODOR			11:25 - Began drilling 9/26/08 w/ HSA
0.0						13:00 - Decided to set casing @ 23' bgs
0.0						8:05 - Decided to set well @ 44' bgs
0.0	5					
0.0						
0.0			- LESS MOTTLING			
0.0	10		- BECOME VERY SANDY; MOIST			
0.0						

DRILLING LOG (Cont Sheet)	ELEVATION TOP OF HOLE TOC = 208.24 (Landmark PT 615)	Hole No. 46WW05
PROJECT LHAAP-46	INSTALLATION LHAAP	SHEET 2 OF 3 SHEETS

PID ~~ELEVATION~~ a	DEPTH b	LEGEND c	CLASSIFICATION OF MATERIALS (Description) d	% CORE RECOVERY e	BOX OR SAMPLE NO. f	REMARKS (Drilling time, water loss, depth of weathering, etc., if significant) g
0.0			Same as above			
	15					
0.0						
0.0						
0.0						
	20		SAND, very clayey, dense, poorly sorted, moist, no odor			
0.0		SC				
0.0			CLAY, SANDY, LOW PLASTICITY, STIFF, ORGANIC, DARK GRAY, DRY			
0.0		CL				
	25					
0.0						
0.0						

ENG FORM 1836—APREVIOUS EDITIONS ARE OBSOLETE.
MAR 71

PROJECT LHAAP | HOLE NO. 46WW05

DRILLING LOG (Cont Sheet)	ELEVATION TOP OF HOLE TOC= 208.24	Hole No. 46WW05
PROJECT LHAAP-46	INSTALLATION LHAAP	SHEET 3 OF 3 SHEETS

ELEVATION PID a	DEPTH b	LEGEND c	CLASSIFICATION OF MATERIALS (Description) d	% CORE RECOVERY e	BOX OR SAMPLE NO. f	REMARKS (Drilling time, water loss, depth of weathering, etc., if significant) g
0.0			Same as above			
	30					
0.0		CL				
0.0						
0.0						
	35		SAND, CLAYEY, Dense, Poorly-Sorted, Gray, Moist to wet, No odor			
0.0		SC				
0.0						
0.0	40					
0.0						
			CLAY, SILTY, ORGANIC, HARD, LOW PLAST. DRY, No odor			
0.0						
	45		END OF BORING @ 44' bgs			

ENG FORM 1836—APREVIOUS EDITIONS ARE OBSOLETE.
MAR 71

PROJECT LHAAP | HOLE NO. 46WW05

WELL COMPLETION FORM (Stickup or Above Grade Completion Well)

FIELD REPRESENTATIVE: Allen Willmore
DRILLING CONTRACTOR: ETL
DRILLING TECHNIQUE: HSA
AUGER SIZE AND TYPE: 10"
BOREHOLE IDENTIFICATION: 46 WW06
BOREHOLE DIAMETER: 10"
WELL IDENTIFICATION: 46 WW06
WELL CONSTRUCTION START DATE: 9/27/08
WELL CONSTRUCTION COMPLETE DATE: 10/2/08
SCREEN MATERIAL: sch. 40 PVC
SCREEN DIAMETER: 4"
STRATUM-SCREENED INTERVAL (FT): 10
CASING MATERIAL: sch 40 PVC
CASING DIAMETER: 4"

TYPE OF FILTER PACK: 20/40 silica sand
GRADIATION: 20/40
AMOUNT OF FILTER PACK USED: 9 bags
TYPE OF BENTONITE: bentonite pellets
AMOUNT BENTONITE USED: 1-50lb bucket
TYPE OF CEMENT: Portland cement
AMOUNT CEMENT USED: ~5-6 96 lb bags
GROUT MATERIALS USED: grout
DIMENSIONS OF SECURITY CASING: 6"x6"
TYPE OF WELL CAP: plugging cap
TYPE OF END CAP: PVC
COMMENTS:

SPECIAL CONDITIONS
(describe and draw)

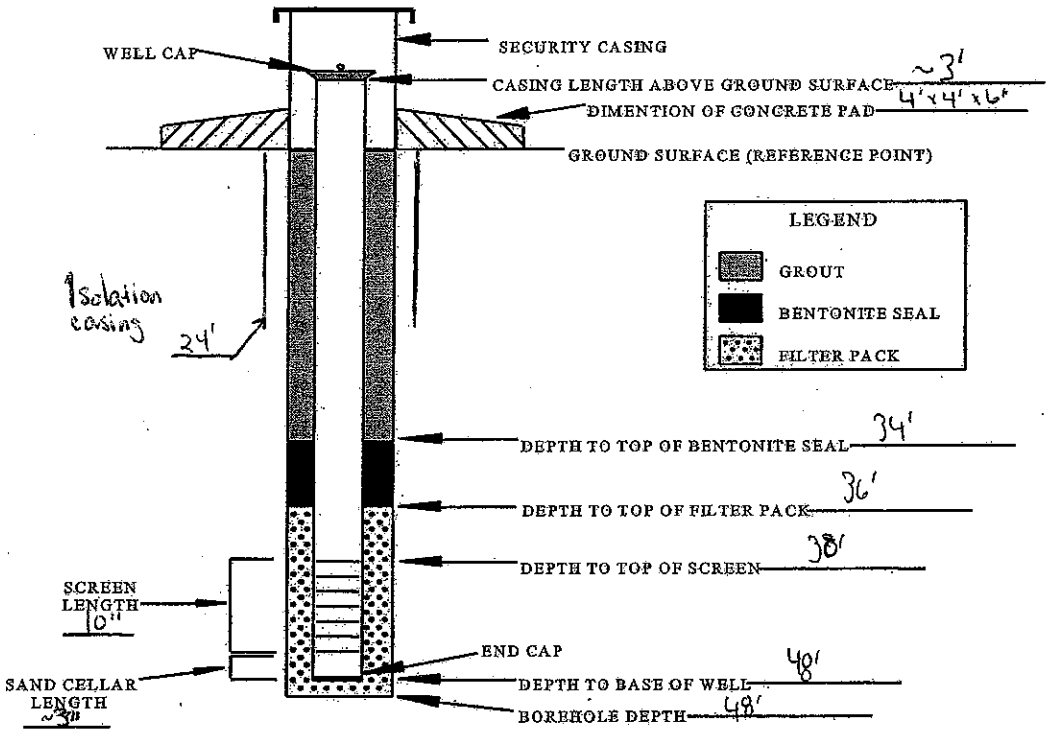

NOT TO SCALE

INSTALLED BY: Tommy Cook
INSTALLATION OBSERVED BY: Allen Willmore
DISCREPANCIES: None

HOLE NO. 46WW06 00078148

BORING LOG	DIVISION Federal	INSTALLATION LHAAP	SHEET 1 OF 2 SHEETS

1. PROJECT Longhorn	9. DATUM FOR ELEVATION SHOWN (TBM or MSL) MS
2. LOCATION Karnack, Tx LHAAP-46	10. MANUFACTURER'S DESIGNATION OF DRILL Mayhew 5500 / Foremost 5500
3. DRILLING AGENCY ETTL	11. OVERBURDEN SAMPLES: DISTURBED — — / UNDISTURBED — —
4. HOLE NO. (As shown on drawing title and file number) 46WW06	12. TOTAL NUMBER CORE BOXES: NR
	13. ELEVATION GROUND WATER NR
5. NAME OF DRILLER Tommy Cook / Doug Hind	14. DATE HOLE: STARTED 9/27/08 COMPLETED 10/2/08
6. DIRECTION OF HOLE ☒ VERTICAL ☐ INCLINED 0° DEG. FROM VERT.	15. ELEVATION TOP OF HOLE TOC = 213.84
7. TOTAL DEPTH OF HOLE 40'	16. TOTAL CORE RECOVERY FOR BORING 100 %
8. SIZE AND TYPE OF BIT 19" tri-cone roller / 10" H.S.A.	17. LOGGED BY Allen Willmore QC RL

PID (ppm) a	DEPTH b	USCS c	CLASSIFICATION OF MATERIALS (Description) d	% CORE RECOVERY e	SAMPLE f	REMARKS (Drilling time, water loss, depth of weathering, etc., if significant) g
0.0			0'-24' bgs (same lithology as 46WW04)	0%		
	25		CLAY, SAND, GRAY, moist, LOW PLASTICITY, MODERATELY STIFF			
0.0			-Becomes DRY	100%		
0.0				100%		
		SC	SAND, CLAYEY, poorly-sorted, dense, moist, no odor			
	30			100%		
0.0						
				100%		
0.0		SC/SP				
			-Becomes SILTY, WET	100%		
0.0	35					
				100%		

DRILLING LOG (Cont Sheet)	ELEVATION TOP OF HOLE TOC = 213.84	Hole No. 46WW06
PROJECT Longhorn	INSTALLATION LHAAP	SHEET 2 OF 2 SHEETS

ELEVATION a	DEPTH b	LEGEND c	CLASSIFICATION OF MATERIALS (Description) d	% CORE RECOVERY e	BOX OR SAMPLE NO. f	REMARKS (Drilling time, water loss, depth of weathering, etc., if significant) g
			SAME AS ABOVE	100%		
				100%		
	40	SC/SP		100%		
				100%		
				100%		
	46			100%		
		CL	CLAY, SILTY,			
	48		END OF BORING			

ENG FORM 1836—APREVIOUS EDITIONS ARE OBSOLETE.
MAR 71

PROJECT LHAAP-46 HOLE NO. 46WW06

February 2007 Groundwater Data - LHAAP-46

		LOCATION_CODE	46WW01					46WW02					46WW04					LHSMW18				
		SAMPLE_NO	46WW01-FEB2007					46WW02-FEB2007					46WW04-FEB2007					LHSMW18-FEB2007				
		SAMPLE_DATE	19-Feb-07					20-Feb-07					19-Feb-07					20-Feb-07				
		SAMPLE_PURPOSE	REG					REG					REG					REG				
Test Group	Parameter	Units	Result	Qual	ValQual	RC	DF	Result	Qual	ValQual	RC	DF	Result	Qual	ValQual	RC	DF	Result	Qual	ValQual	RC	DF
DHE	Dehalococcoides	cells/ml	10	U	U		5.2	8000				2.7	10	U	U		1	10	U	U		1.7
GASES	Ethane	ug/L	0.6	U	U		1	0.6	U	U		1	0.6	U	U		1	0.6	U	U		1
GASES	Ethylene	ug/L	0.8	U	U		1	0.8	U	U		1	0.8	U	U		1	0.8	U	U		1
GASES	Methane	ug/L	0.52				1	0.42	J	J	15	1	1.27				1	0.3	U	U		1
GEN CHEMISTRY	Carbon Dioxide	mg/L	96				1	175				1	280				1	100				1
GEN CHEMISTRY	Chloride	mg/L	2.6				1	30				1	782				1	410				1
GEN CHEMISTRY	Nitrate	mg/L	0.005	U	U		1	0.19				1	0.005	U	U		1	0.19				1
GEN CHEMISTRY	Nitrate / Nitrite	mg/L	0.05				1	0.2				1	0.02	B	J	15	1	0.2				1
GEN CHEMISTRY	Nitrite	mg/L	0.02	B	J	15	1	0.01	B	J	15	1	0.02	B	J	15	1	0.01	B	J	15	1
GEN CHEMISTRY	Perchlorate	ug/L	4	U	U		1	4	U	U		1	4	U	U		1	4	U	U		1
GEN CHEMISTRY	pH	STD UNIT	5.9				1	4.9				1	6.4				1	6.5				1
GEN CHEMISTRY	Specific Conductivity	uS/cm	113				1	558				1	4230				1	3300				1
GEN CHEMISTRY	Sulfate	mg/L	48				2	238				2	1110				4	1260				10
GEN CHEMISTRY	Sulfide	mg/L	0.2	U	U		1	0.2	U	U		1	0.2	U	U		1	0.2	U	U		1
GEN CHEMISTRY	Total Alkalinity	mg/L	38				1	7				1	356				1	158				1
GEN CHEMISTRY	Total Organic Carbon	mg/L	3				1	9				1	3				1	18				1
VOLATILES	1,1,1-Trichloroethane	ug/L	0.37	U	U		1	0.37	U	U		1	0.37	U	U		1	0.37	U	U		1
VOLATILES	1,1,2,2-Tetrachloroethane	ug/L	0.46	U	U		1	0.46	U	U		1	0.46	U	U		1	0.46	U	U		1
VOLATILES	1,1,2-Trichloroethane	ug/L	0.66	U	U		1	0.66	U	U		1	0.66	U	U		1	0.66	U	U		1
VOLATILES	1,1-Dichloroethane	ug/L	0.52	U	U		1	0.52	U	U		1	0.52	U	U		1	0.52	U	U		1
VOLATILES	1,1-Dichloroethene	ug/L	0.68	U	U		1	1.3	J	J	15	1	0.68	U	U		1	0.68	U	U		1
VOLATILES	1,2-Dichloroethane	ug/L	0.53	U	U		1	0.53	U	U		1	0.53	U	U		1	0.53	U	U		1
VOLATILES	1,2-Dichloropropane	ug/L	0.59	U	U		1	0.59	U	U		1	0.59	U	U		1	0.59	U	U		1
VOLATILES	2-Butanone	ug/L	3	U	U		1	3	U	U		1	3	U	U		1	3	U	U		1
VOLATILES	2-Hexanone	ug/L	1.9	U	U		1	1.9	U	U		1	1.9	U	U		1	1.9	U	U		1
VOLATILES	Acetone	ug/L	2.8	U	U		1	2.8	U	U		1	2.8	U	U		1	2.8	U	U		1
VOLATILES	Benzene	ug/L	0.23	U	U		1	0.23	U	U		1	0.23	U	U		1	0.23	U	U		1
VOLATILES	Bromodichloromethane	ug/L	0.33	U	U		1	0.33	U	U		1	0.33	U	U		1	0.33	U	U		1
VOLATILES	Bromoform	ug/L	0.65	U	U		1	0.65	U	U		1	0.65	U	U		1	0.65	U	U		1
VOLATILES	Bromomethane	ug/L	0.47	U	U		1	0.47	U	U		1	0.47	U	U		1	0.47	U	U		1
VOLATILES	Carbon disulfide	ug/L	0.62	U	U		1	0.62	U	U		1	0.62	U	U		1	0.62	U	U		1
VOLATILES	Carbon tetrachloride	ug/L	0.52	U	U		1	0.52	U	U		1	0.52	U	U		1	0.52	U	U		1
VOLATILES	Chlorobenzene	ug/L	0.54	U	U		1	0.54	U	U		1	0.54	U	U		1	0.54	U	U		1
VOLATILES	Chloroethane	ug/L	0.46	U	U		1	0.46	U	U		1	0.46	U	U		1	0.46	U	U		1
VOLATILES	Chloroform	ug/L	0.66	U	U		1	0.66	U	U		1	0.66	U	U		1	0.66	U	U		1
VOLATILES	Chloromethane	ug/L	0.6	U	U		1	0.6	U	U		1	0.6	U	U		1	0.6	U	U		1
VOLATILES	cis-1,2-Dichloroethene	ug/L	0.83	U	U		1	1.4	J	J	15	1	0.83	U	U		1	1.5	J	J	15	1
VOLATILES	cis-1,3-Dichloropropene	ug/L	0.59	U	U		1	0.59	U	U		1	0.59	U	U		1	0.59	U	U		1
VOLATILES	Dibromochloromethane	ug/L	0.68	U	U		1	0.68	U	U		1	0.68	U	U		1	0.68	U	U		1
VOLATILES	Ethylbenzene	ug/L	0.48	U	U		1	0.48	U	U		1	0.48	U	U		1	0.48	U	U		1
VOLATILES	Methyl isobutyl ketone	ug/L	7.3	U	U		1	7.3	U	U		1	7.3	U	U		1	7.3	U	U		1
VOLATILES	Methylene chloride	ug/L	0.67	U	U		1	0.67	U	U		1	0.67	U	U		1	0.67	U	U		1
VOLATILES	Styrene	ug/L	0.5	U	U		1	0.5	U	U		1	0.5	U	U		1	0.5	U	UJL	08A	1
VOLATILES	Tetrachloroethene	ug/L	0.74	U	U		1	0.74	U	U		1	0.74	U	U		1	0.74	U	U		1
VOLATILES	Toluene	ug/L	0.54	U	U		1	0.54	U	U		1	0.54	U	U		1	0.54	U	U		1
VOLATILES	trans-1,2-Dichloroethene	ug/L	0.75	U	U		1	0.75	U	U		1	0.75	U	U		1	0.75	U	U		1
VOLATILES	trans-1,3-Dichloropropene	ug/L	0.61	U	U		1	0.61	U	U		1	0.61	U	U		1	0.61	U	U		1
VOLATILES	Trichloroethene	ug/L	0.63	U	U		1	28.9				1	0.63	U	U		1	4.8				1
VOLATILES	Vinyl chloride	ug/L	0.32	U	U		1	0.32	U	U		1	0.32	U	U		1	0.32	U	U		1
VOLATILES	Xylenes, Total	ug/L	1.1	U	U		1	1.1	U	U		1	1.1	U	U		1	1.1	U	U		1

February 2007 Groundwater Data - LHAAP-46

		LOCATION_CODE	LHSMW19					LHSMW22					LHSMW23				
		SAMPLE_NO	LHSMW19-FEB2007					LHSMW22-FEB2007					LHSMW23-FEB2007				
		SAMPLE_DATE	20-Feb-07					19-Feb-07					19-Feb-07				
		SAMPLE_PURPOSE	REG					REG					REG				
Test Group	Parameter	Units	Result	Qual	ValQual	RC	DF	Result	Qual	ValQual	RC	DF	Result	Qual	ValQual	RC	DF
DHE	Dehalococcoides	cells/ml	30				1	10	U	U		1	15				1
GASES	Ethane	ug/L	0.6	U	U		1	0.6	U	U		1	0.6	U	U		1
GASES	Ethylene	ug/L	0.8	U	U		1	0.8	U	U		1	0.8	U	U		1
GASES	Methane	ug/L	0.3	U	U		1	2.56				1	9.65				1
GEN CHEMISTRY	Carbon Dioxide	mg/L	110				1	1380				1	840				1
GEN CHEMISTRY	Chloride	mg/L	161				1	1530				1	1180				1
GEN CHEMISTRY	Nitrate	mg/L	0.005	U	U		1	0.35				1	0.005	U*<	U		1
GEN CHEMISTRY	Nitrate / Nitrite	mg/L	0.01	B	J	15	1	0.4				1	0.005	U	U		1
GEN CHEMISTRY	Nitrite	mg/L	0.01	B	J	15	1	0.05				1	0.02	B	J	15	1
GEN CHEMISTRY	Perchlorate	ug/L	4	U	U		1	4	U	U		1	4	U	U		1
GEN CHEMISTRY	pH	STD UNIT	6.4				1	5.5				1	5.7				1
GEN CHEMISTRY	Specific Conductivity	uS/cm	1360				1	7580				1	5040				1
GEN CHEMISTRY	Sulfate	mg/L	309				4	3020				10	902				4
GEN CHEMISTRY	Sulfide	mg/L	0.2	U	U		1	0.2	U	U		1	0.2	U	U		1
GEN CHEMISTRY	Total Alkalinity	mg/L	138				1	218				1	211				1
GEN CHEMISTRY	Total Organic Carbon	mg/L	5				1	13				1	8				1
VOLATILES	1,1,1-Trichloroethane	ug/L	0.37	U	U		1	0.37	U	U		1	0.37	U	U		1
VOLATILES	1,1,2,2-Tetrachloroethane	ug/L	0.46	U	U		1	0.46	U	U		1	0.46	U	U		1
VOLATILES	1,1,2-Trichloroethane	ug/L	0.66	U	U		1	0.66	U	U		1	0.66	U	U		1
VOLATILES	1,1-Dichloroethane	ug/L	0.52	U	U		1	0.52	U	U		1	0.52	U	U		1
VOLATILES	1,1-Dichloroethene	ug/L	0.68	U	U		1	0.68	U	U		1	0.68	U	U		1
VOLATILES	1,2-Dichloroethane	ug/L	0.53	U	U		1	0.53	U	U		1	0.53	U	U		1
VOLATILES	1,2-Dichloropropane	ug/L	0.59	U	U		1	0.59	U	U		1	0.59	U	U		1
VOLATILES	2-Butanone	ug/L	3	U	U		1	3	U	U		1	3	U	U		1
VOLATILES	2-Hexanone	ug/L	1.9	U	U		1	1.9	U	U		1	1.9	U	U		1
VOLATILES	Acetone	ug/L	2.8	U	U		1	4.3	J	J	15	1	2.8	U	U		1
VOLATILES	Benzene	ug/L	0.23	U	U		1	0.23	U	U		1	0.23	U	U		1
VOLATILES	Bromodichloromethane	ug/L	0.33	U	U		1	0.33	U	U		1	0.33	U	U		1
VOLATILES	Bromoform	ug/L	0.65	U	U		1	0.65	U	U		1	0.65	U	U		1
VOLATILES	Bromomethane	ug/L	0.47	U	U		1	0.47	U	U		1	0.47	U	U		1
VOLATILES	Carbon disulfide	ug/L	0.62	U	U		1	0.62	U	U		1	0.62	U	U		1
VOLATILES	Carbon tetrachloride	ug/L	0.52	U	U		1	0.52	U	U		1	0.52	U	U		1
VOLATILES	Chlorobenzene	ug/L	0.54	U	U		1	0.54	U	U		1	0.54	U	U		1
VOLATILES	Chloroethane	ug/L	0.46	U	U		1	0.46	U	U		1	0.46	U	U		1
VOLATILES	Chloroform	ug/L	0.66	U	U		1	0.66	U	U		1	0.66	U	U		1
VOLATILES	Chloromethane	ug/L	0.6	U	U		1	0.6	U	U		1	0.6	U	U		1
VOLATILES	cis-1,2-Dichloroethene	ug/L	0.83	U	U		1	0.83	U	U		1	0.83	U	U		1
VOLATILES	cis-1,3-Dichloropropene	ug/L	0.59	U	U		1	0.59	U	U		1	0.59	U	U		1
VOLATILES	Dibromochloromethane	ug/L	0.68	U	U		1	0.68	U	U		1	0.68	U	U		1
VOLATILES	Ethylbenzene	ug/L	0.48	U	U		1	0.48	U	U		1	0.48	U	U		1
VOLATILES	Methyl isobutyl ketone	ug/L	7.3	U	U		1	7.3	U	U		1	7.3	U	U		1
VOLATILES	Methylene chloride	ug/L	0.67	U	U		1	0.67	U	U		1	0.67	U	U		1
VOLATILES	Styrene	ug/L	0.5	U	U		1	0.5	U	U		1	0.5	U	U		1
VOLATILES	Tetrachloroethene	ug/L	0.74	U	U		1	0.74	U	U		1	0.74	U	U		1
VOLATILES	Toluene	ug/L	0.54	U	U		1	0.54	U	U		1	0.54	U	U		1
VOLATILES	trans-1,2-Dichloroethene	ug/L	0.75	U	U		1	0.75	U	U		1	0.75	U	U		1
VOLATILES	trans-1,3-Dichloropropene	ug/L	0.61	U	U		1	0.61	U	U		1	0.61	U	U		1
VOLATILES	Trichloroethene	ug/L	85.5				1	0.63	U	U		1	1.4	J	J	15	1
VOLATILES	Vinyl chloride	ug/L	0.32	U	U		1	0.32	U	U		1	0.32	U	U		1
VOLATILES	Xylenes, Total	ug/L	1.1	U	U		1	1.1	U	U		1	1.1	U	U		1

Notes and Abbreviations:

B - The concentration reported was detected in the associated method blank, trip blank, or equipment blank within 5X/10X the blank concentration.

DF - dilution factor

J - The analyte was positively identified; the reported value is the estimated concentration of the constituent detected in the sample analyzed.

L - Result may be biased low. Details are provided in the validation report.

mg/L - milligrams per liter

ml - milliliter

RC - reason code

U - Not detected. The analyte was anlyzed for, but not detected above the associated reporiing limit.

ug/L - micrograms per liter

uS/cm - microsiemens per centimeter

September 2007 Groundwater Data - LHAAP-46

		LOCATION_CODE	46WW02					46WW04					LHSMW11					LHSMW14					LHSMW15					LHSMW19				
		SAMPLE_NO	46WW02-090707					46WW04-090707					LHSMW11-090707					LHSMW14-090707					LHSMW15-090707					LHSMW19-090707				
		SAMPLE_DATE	7-Sep-07					7-Sep-07					7-Sep-07					10-Sep-07					10-Sep-07					11-Sep-07				
		SAMPLE_PURPOSE	REG					REG					REG					REG					REG					REG				
Test Group	Parameter	Units	Result	Qual	ValQual	RC	DF	Result	Qual	ValQual	RC	DF	Result	Qual	ValQual	RC	DF	Result	Qual	ValQual	RC	DF	Result	Qual	ValQual	RC	DF	Result	Qual	ValQual	RC	DF
GEN CHEMISTRY	TOTAL DISSOLVED SOLIDS	mg/L	372				1	2760				1	2990				1	122				1	3830				1	870				1
GEN CHEMISTRY	TOTAL SUSPENDED SOLIDS	mg/L	4.5	J	J	13	1	13				1	25.5				1	23.5				1	6.5				1	9.5				1
METALS	Aluminum	mg/L	0.233				1	0.05	U	U		1	0.508				1	1.36				1	0.1	U	U		2	0.251				1
METALS	Antimony	mg/L	0.0025	U	U		10	0.0025	U	U		10	0.0025	U	U		10	0.0025	U	U		10	0.0025	U	U		10	0.0025	U	U		10
METALS	Arsenic	mg/L	0.0025	U	UJ	13	10	0.00287	J	J	13, 15	10	0.00531	J	J	13, 15	10	0.0025	U	UJ	13	10	0.0062	J	J	13, 15	10	0.0025	U	UJ	13	10
METALS	Barium	mg/L	0.0219	J	J	15	10	0.0296	J	J	15	10	0.0495				10	0.0449				10	0.0174	J	J	15	10	0.0316				10
METALS	Beryllium	mg/L	0.0005	U	U		1	0.0005	U	U		1	0.0005	U	U		1	0.0005	U	U		1	0.0005	U	U		1	0.0005	U	U		1
METALS	Cadmium	mg/L	0.00193	J	J	15	10	0.00125	U	U		10	0.00125	U	U		10	0.00125	U	U		10	0.00193	J	J	15	10	0.00125	U	U		10
METALS	Calcium	mg/L	20.3				1	328				1	269				1	2.55				1	523				2	64.7				1
METALS	Chromium	mg/L	0.00887	J	J	15	10	0.509			13, 15	10	1.02				10	0.0627				10	0.902				10	0.0164	J	J	15	10
METALS	Cobalt	mg/L	0.0165				1	0.0499				1	0.0227				1	0.0025	U	U		1	0.0025	U	U		1	0.0025	U	U		1
METALS	Copper	mg/L	0.0055	J	J	13, 15	10	0.0137	J	J	15	10	0.0287		J	13	10	0.005	U	UJ	13	10	0.0464		J	13	10	0.005	U	UJ	13	10
METALS	Iron	mg/L	1.65				1	9.82				1	7.88				1	1.61				1	4.31				1	0.529				1
METALS	Lead	mg/L	0.0025	U	U		10	0.0025	U	U		10	0.0025	U	U		10	0.0025	U	U		10	0.0025	U	U		10	0.0025	U	U		10
METALS	Magnesium	mg/L	17				1	165				1	119				1	1.81				1	273				1	44.8				1
METALS	Manganese	mg/L	0.178				10	3.44				100	1.38				100	0.0237				10	0.186				10	0.0635				10
METALS	Mercury	mg/L	0.0001	U	U		1	0.0001	U	U		1	0.0001	U	U		1	0.0001	U	U		1	0.000193	J	J	15	1	0.0001	U	U		1
METALS	Nickel	mg/L	0.0616				10	3.04				100	2.07				100	0.0135	J	J	15	10	0.626				10	0.0758				10
METALS	Potassium	mg/L	2.33		J	13	1	3.04		J	13	1	1.27		J	13	1	0.754	J	J	13, 15	1	5.7		J	13	1	2.77		J	13	1
METALS	Selenium	mg/L	0.005	U	UJ	13	10	0.00921	J	J	13, 15	10	0.0187		J	13	10	0.005	U	UJ	13	10	0.0227		J	13	10	0.005	U	UJ	13	10
METALS	Silver	mg/L	0.0025	U	U		10	0.0025	U	U		10	0.0025	U	U		10	0.0025	U	U		10	0.0025	U	U		10	0.0025	U	U		10
METALS	Sodium	mg/L	46.8		J	13	1	492		J	13	20	597		J	13	20	12.1		J	13	1	2850		J	13	20	163		J	13	1
METALS	Thallium	mg/L	0.00388		J	13	10	0.00761		J	13	10	0.00854		J	13	10	0.0005	U	UJ	13	10	0.00492		J	13	10	0.00194	J	J	13, 15	10
METALS	Vanadium	mg/L	0.005	U	U		1	0.005	U	U		1	0.005	U	U		1	0.005	U	U		1	0.005	U	U		1	0.025	U	U		5
METALS	Zinc	mg/L	0.0879		J	13	1	0.00652	J	J	13, 15	1	0.00897	J	J	13, 15	1	0.00714	J	J	13, 15	1	300		J	13	20	0.0136	J	J	13, 15	1
METALS-DISS	Aluminum	mg/L	0.05	U	U		1	0.05	U	U		1	0.05	U	U		1	0.05	U	U		1	0.1	U	U		2	0.05	U	U		1
METALS-DISS	Antimony	mg/L	0.0025	U	U		10	0.0025	U	U		10	0.0025	U	U		10	0.0025	U	U		10	0.0025	U	U		10	0.0025	U	U		10
METALS-DISS	Arsenic	mg/L	0.0025	U	U		10	0.0025	U	U		10	0.00335	J			10	0.0025	U	U		10	0.00618	J	J	13	10	0.0025	U	U		10
METALS-DISS	Barium	mg/L	0.0195	J	J	13, 15	10	0.0356		J	13	10	0.0514		J	13	10	0.0114	J	J	13, 15	10	0.0267	J	J	13, 15	10	0.0301		J	13	10
METALS-DISS	Beryllium	mg/L	0.0005	U	U		1	0.0005	U	U		1	0.0005	U	U		1	0.0005	U	U		1	0.0005	U	U		1	0.0005	U	U		1
METALS-DISS	Cadmium	mg/L	0.00125	U	U		10	0.00125	U	U		10	0.00125	U	U		10	0.00125	U	U		10	0.00125	U	U		10	0.00125	U	U		10
METALS-DISS	Calcium	mg/L	22.3				1	357				1	277				1	3.64				1	500				2	68.4				1
METALS-DISS	Chromium	mg/L	0.005	U	U	13	10	0.0128	J	J	13, 15	10	0.00949	J	J	13, 15	10	0.00526	J	J	13, 15	10	0.0576		J	13	10	0.005	U	UJ	13	10
METALS-DISS	Cobalt	mg/L	0.0152				1	0.0556				1	0.0205				1	0.0025	U	U		1	0.0025	U	U		1	0.0025	U	U		1
METALS-DISS	Copper	mg/L	0.005	U	UJ		10	0.005	U	U		10	0.00542	J	J	15	10	0.005	U	U		10	0.0169	J			10	0.005	U	U		10
METALS-DISS	Iron	mg/L	0.749				1	3.35				1	0.025	U	U		1	0.0493	J	J	15	1	0.025	U	U		1	0.025	U	U		1
METALS-DISS	Lead	mg/L	0.0025	U	U		10	0.0025	U	U		10	0.0025	U	U		10	0.0025	U	U		10	0.0025	U	U		10	0.0025	U	U		10
METALS-DISS	Magnesium	mg/L	16.4				1	169				1	113				1	1.8				1	262				1	39.8				1
METALS-DISS	Manganese	mg/L	0.148		J	13	10	2.95		J	13	100	1.06		J	13	10	0.015	J	J	13, 15	10	0.0937		J	13	10	0.0474		J	13	10
METALS-DISS	Mercury	mg/L	0.0001	U	U		1	0.0001	U	U		1	0.0001	U	U		1	0.0001	U	U		1	0.000165	J	J	15	1	0.0001	U	U		1
METALS-DISS	Nickel	mg/L	0.0586		J	13	10	3.03		J	13	100	1.67		J	13	10	0.0174	J	J	13, 15	10	0.602		J	13	10	0.0704		J	13	10
METALS-DISS	Potassium	mg/L	2.57		J	13	1	3.73		J	13	1	1.56		J	13	1	0.928	J	J	13, 15	1	4.14		J	13	1	2.57		J	13	1
METALS-DISS	Selenium	mg/L	0.005	U	U		10	0.00561	J	J	15	10	0.0136				10	0.005	U	U		10	0.0208				10	0.005	U	U		10
METALS-DISS	Silver	mg/L	0.0025	U	U		10	0.0025	U	U		10	0.0025	U	U		10	0.0025	U	U		10	0.0025	U	U		10	0.0025	U	U		10
METALS-DISS	Sodium	mg/L	57.7		J	13	1	433		J	13	20	655		J	13	20	22.5		J	13	1	1020		J	13	20	172		J	13	1
METALS-DISS	Thallium	mg/L	0.00348		J	13	10	0.00905		J	13	10	0.0101		J	13	10	0.00428		J	13	10	0.00621		J	13	10	0.00334		J	13	10
METALS-DISS	Vanadium	mg/L	0.025	U	U		5	0.1	U	U		20	0.1	U	U		20	0.005	U	U		1	0.1	U	U		20	0.1	U	U		20
METALS-DISS	Zinc	mg/L	0.0443		J	13	1	0.005	U	UJ	13	1	0.005	U	UJ	13	1	0.005	U	UJ	13	1	0.00807	J	J	13, 15	1	0.005	U	UJ	13	1

September 2007 Groundwater Data - LHAAP-46

		LOCATION_CODE	LHSMW22					LHSMW23					LHSMW24					LHSMW24				
		SAMPLE_NO	LHSMW22-090707					LHSMW23-090707					LHSMW24-090707					LHSMW24-090707-FD				
		SAMPLE_DATE	11-Sep-07					11-Sep-07					11-Sep-07					11-Sep-07				
		SAMPLE_PURPOSE	REG					REG					REG					FD				
Test Group	Parameter	Units	Result	Qual	ValQual	RC	DF	Result	Qual	ValQual	RC	DF	Result	Qual	ValQual	RC	DF	Result	Qual	ValQual	RC	DF
GEN CHEMISTRY	TOTAL DISSOLVED SOLIDS	mg/L	3760				1	3280				1	3990				1	3980				1
GEN CHEMISTRY	TOTAL SUSPENDED SOLIDS	mg/L	2.5	U	U		1	13.5				1	5				1	6				1
METALS	Aluminum	mg/L	0.1	U	U		2	0.05	U	U		1	0.1	U	U		2	0.1	U	U		2
METALS	Antimony	mg/L	0.0025	U	U		10	0.0025	U	U		10	0.0025	U	U		10	0.0025	U	U		10
METALS	Arsenic	mg/L	0.00485	J	J	13, 15	10	0.00405	J	J	13, 15	10	0.00569	J	J	13, 15	10	0.00871	J	J	13, 15	10
METALS	Barium	mg/L	0.0166	J	J	15	10	0.0229	J	J	15	10	0.0325				10	0.03				10
METALS	Beryllium	mg/L	0.0005	U	U		1	0.0005	U	U		1	0.0005	U	U		1	0.0005	U	U		1
METALS	Cadmium	mg/L	0.00391	J	J	15	10	0.00125	U	U		10	0.00125	U	U		10	0.00125	U	U		10
METALS	Calcium	mg/L	562				2	330				1	610				2	581				2
METALS	Chromium	mg/L	0.0316				10	0.923				10	0.0582				10	0.0542				10
METALS	Cobalt	mg/L	0.083				1	0.00437	J	J	15	1	0.0025	U	U		1	0.0025	U	U		1
METALS	Copper	mg/L	0.0462		J	13	10	0.0064	J	J	13, 15	10	0.0104	J	J	13, 15	10	0.00989	J	J	13, 15	10
METALS	Iron	mg/L	2.91				1	5.59				1	0.449				1	0.413				1
METALS	Lead	mg/L	0.0025	U	U		10	0.0025	U	U		10	0.0025	U	U		10	0.0025	U	U		10
METALS	Magnesium	mg/L	451				2	237				1	393				1	391				1
METALS	Manganese	mg/L	3.79				100	1.59				10	0.153				10	0.128				10
METALS	Mercury	mg/L	0.0001	U	U		1	0.0001	U	U		1	0.00146				1	0.00142				1
METALS	Nickel	mg/L	3.49				100	0.0604				10	0.0644				10	0.0584				10
METALS	Potassium	mg/L	3.26		J	13	1	3.07		J	13	1	2.21		J	13	1	2.25		J	13	1
METALS	Selenium	mg/L	0.0177		J	13	10	0.0166		J	13	10	0.0264		J	13	10	0.034		J	13	10
METALS	Silver	mg/L	0.0025	U	U		10	0.0025	U	U		10	0.0025	U	U		10	0.0025	U	U		10
METALS	Sodium	mg/L	911		J	13	20	460		J	13	20	1160		J	13	20	1450		J	13	20
METALS	Thallium	mg/L	0.00561		J	13	10	0.00504		J	13	10	0.00529		J	13	10	0.00522		J	13	10
METALS	Vanadium	mg/L	0.00924	J	J	13, 15	1	0.005	U	U		1	0.005	U	U		1	0.005	U	U		1
METALS	Zinc	mg/L	0.0488		J	13	1	0.0143	J	J	13, 15	1	0.00619	J	J	13, 15	1	0.00579	J	J	13, 15	1
METALS-DISS	Aluminum	mg/L	0.1	U	U		2	0.05	U	U		1	0.1	U	U		2	0.1	U	U		2
METALS-DISS	Antimony	mg/L	0.0025	U	U		10	0.0025	U	U		10	0.0025	U	U		10	0.0025	U	U		10
METALS-DISS	Arsenic	mg/L	0.0068	J	J	15	10	0.00522	J	J	15	10	0.00759	J	J	15	10	0.00608	J	J	15	10
METALS-DISS	Barium	mg/L	0.0268	J	J	13, 15	10	0.0302		J	13	10	0.0369		J	13	10	0.0372		J	13	10
METALS-DISS	Beryllium	mg/L	0.0005	U	U		1	0.0005	U	U		1	0.0005	U	U		1	0.0005	U	U		1
METALS-DISS	Cadmium	mg/L	0.00239	J	J	15	10	0.00125	U	U		10	0.00125	U	U		10	0.00125	U	U		10
METALS-DISS	Calcium	mg/L	555				2	345				1	612				2	605				2
METALS-DISS	Chromium	mg/L	0.0122	J	J	13, 15	10	0.0197	J	J	13, 15	10	0.0152	J	J	13, 15	10	0.0153	J	J	13, 15	10
METALS-DISS	Cobalt	mg/L	0.0929				1	0.00411	J	J	15	1	0.0025	U	U		1	0.0025	U	U		1
METALS-DISS	Copper	mg/L	0.0491				10	0.005	U	U		10	0.00798	J	J	15	10	0.00727	J	J	15	10
METALS-DISS	Iron	mg/L	2.65				1	0.147				1	0.025	U	UJ	17	1	0.025	U	U		1
METALS-DISS	Lead	mg/L	0.0025	U	U		10	0.0025	U	U		10	0.0025	U	U		10	0.0025	U	U		10
METALS-DISS	Magnesium	mg/L	466				2	220				1	370				1	367				1
METALS-DISS	Manganese	mg/L	3.62		J	13	100	1.36		J	13	10	0.128		J	13	10	0.133		J	13	10
METALS-DISS	Mercury	mg/L	0.0001	U	U		1	0.0001	U	U		1	0.00115				1	0.000988				1
METALS-DISS	Nickel	mg/L	3.67		J	13	100	0.0521		J	13	10	0.0944		J	13	10	0.069		J	13	10
METALS-DISS	Potassium	mg/L	3.24		J	13	1	3.23		J	13	1	2.43		J	13	1	2.42		J	13	1
METALS-DISS	Selenium	mg/L	0.0257				10	0.0223				10	0.027				10	0.0202				10
METALS-DISS	Silver	mg/L	0.0025	U	U		10	0.0025	U	U		10	0.0025	U	U		10	0.0025	U	U		10
METALS-DISS	Sodium	mg/L	945		J	13	20	505		J	13	20	1150		J	13	20	1150		J	13	20
METALS-DISS	Thallium	mg/L	0.00623		J	13	10	0.00557		J	13	10	0.00543		J	13	10	0.00518		J	13	10
METALS-DISS	Vanadium	mg/L	0.005	U	U		1	0.1	U	U		20	0.25	U	U		50	0.25	U	U		50
METALS-DISS	Zinc	mg/L	0.0332		J	13	1	0.005	U	UJ	13	1	0.005	U	UJ	13	1	0.005	U	UJ	13	1

Notes and Abbreviations:

DF - dilution factor

J - The analyte was positively identified; the reported value is the estimated concentration of the constituent detected in the sample analyzed.

mg/L - milligrams per liter

RC - reason code

U - Not detected. The analyte was anlyzed for, but not detected above the associated reporiing limit.

13 - serial dilution

15 - quantitation

17 - field duplicate RPD criteria is exceeded

March 2008 Groundwater Data, LHAAP-46

		LOCATION_CODE	LHSMW09					LHSMW11				
		SAMPLE_NO	LHSMW09-031508					LHSMW11-031508				
		SAMPLE_DATE	15-Mar-08					15-Mar-08				
		SAMPLE_TYPE	GW					GW				
Test Group	Parameter	Units	Result	Qual	ValQual	RC	DF	Result	Qual	ValQual	RC	DF
VOLATILES	1,1,1,2-Tetrachloroethane	µg/L	0.25	U	U	---	1	0.25	U	U	---	1
VOLATILES	1,1,1-Trichloroethane	µg/L	0.25	U	U	---	1	0.25	U	U	---	1
VOLATILES	1,1,2,2-Tetrachloroethane	µg/L	0.125	U	U	---	1	0.125	U	U	---	1
VOLATILES	1,1,2-Trichloroethane	µg/L	0.25	U	U	---	1	0.25	U	U	---	1
VOLATILES	1,1-Dichloroethane	µg/L	0.125	U	U	---	1	0.125	U	U	---	1
VOLATILES	1,1-Dichloroethene	µg/L	0.5	U	U	---	1	0.5	U	U	---	1
VOLATILES	1,1-Dichloropropene	µg/L	0.25	U	U	---	1	0.25	U	U	---	1
VOLATILES	1,2,3-Trichlorobenzene	µg/L	0.125	U	U	---	1	0.125	U	U	---	1
VOLATILES	1,2,3-Trichloropropane	µg/L	0.5	U	U	---	1	0.5	U	U	---	1
VOLATILES	1,2,4-Trichlorobenzene	µg/L	0.2	U	U	---	1	0.2	U	U	---	1
VOLATILES	1,2,4-Trimethylbenzene	µg/L	0.25	U	U	---	1	0.25	U	U	---	1
VOLATILES	1,2-Dibromo-3-chloropropane	µg/L	1	U	U	---	1	1	U	U	---	1
VOLATILES	1,2-Dibromoethane	µg/L	0.25	U	U	---	1	0.25	U	U	---	1
VOLATILES	1,2-Dichlorobenzene	µg/L	0.125	U	U	---	1	0.125	U	U	---	1
VOLATILES	1,2-Dichloroethane	µg/L	0.25	U	U	---	1	0.25	U	U	---	1
VOLATILES	1,2-Dichloropropane	µg/L	0.2	U	U	---	1	0.2	U	U	---	1
VOLATILES	1,2-Dimethylbenzene (o-Xylene)	µg/L	0.25	U	U	---	1	0.25	U	U	---	1
VOLATILES	1,3,5-Trimethylbenzene	µg/L	0.25	U	U	---	1	0.25	U	U	---	1
VOLATILES	1,3-Dichlorobenzene	µg/L	0.25	U	U	---	1	0.25	U	U	---	1
VOLATILES	1,3-Dichloropropane	µg/L	0.2	U	U	---	1	0.2	U	U	---	1
VOLATILES	1,4-Dichlorobenzene	µg/L	0.125	U	U	---	1	0.125	U	U	---	1
VOLATILES	2,2-Dichloropropane	µg/L	0.25	U	U	---	1	0.25	U	U	---	1
VOLATILES	2-Butanone	µg/L	2.5	U	U	---	1	2.5	U	U	---	1
VOLATILES	2-Chloroethyl vinyl ether	µg/L	2	U	UJ	05B	1	2	U	U	---	1
VOLATILES	2-Chlorotoluene	µg/L	0.125	U	U	---	1	0.125	U	U	---	1
VOLATILES	2-Hexanone	µg/L	2.5	U	U	---	1	2.5	U	U	---	1
VOLATILES	4-Chlorotoluene	µg/L	0.25	U	U	---	1	0.25	U	U	---	1
VOLATILES	Acetone	µg/L	2.5	U	U	---	1	2.5	U	U	---	1
VOLATILES	Benzene	µg/L	0.125	U	U	---	1	0.125	U	U	---	1
VOLATILES	Bromobenzene	µg/L	0.125	U	U	---	1	0.125	U	U	---	1
VOLATILES	Bromochloromethane	µg/L	0.2	U	U	---	1	0.2	U	U	---	1
VOLATILES	Bromodichloromethane	µg/L	0.25	U	U	---	1	0.25	U	U	---	1
VOLATILES	Bromoform	µg/L	0.5	U	U	---	1	0.5	U	U	---	1
VOLATILES	Bromomethane	µg/L	0.5	U	U	---	1	0.5	U	U	---	1
VOLATILES	Carbon disulfide	µg/L	0.5	U	U	---	1	0.5	U	U	---	1
VOLATILES	Carbon tetrachloride	µg/L	0.25	U	U	---	1	0.25	U	U	---	1
VOLATILES	Chlorobenzene	µg/L	0.125	U	U	---	1	0.125	U	U	---	1
VOLATILES	Chloroethane	µg/L	0.5	U	U	---	1	0.5	U	U	---	1
VOLATILES	Chloroform	µg/L	0.125	U	U	---	1	0.125	U	U	---	1
VOLATILES	Chloromethane	µg/L	0.25	U	U	---	1	0.25	U	U	---	1
VOLATILES	cis-1,2-Dichloroethene	µg/L	0.25	U	U	---	1	0.25	U	U	---	1
VOLATILES	cis-1,3-Dichloropropene	µg/L	0.25	U	U	---	1	0.25	U	U	---	1

March 2008 Groundwater Data, LHAAP-46

		LOCATION_CODE	LHSMW09					LHSMW11				
		SAMPLE_NO	LHSMW09-031508					LHSMW11-031508				
		SAMPLE_DATE	15-Mar-08					15-Mar-08				
		SAMPLE_TYPE	GW					GW				
Test Group	Parameter	Units	Result	Qual	ValQual	RC	DF	Result	Qual	ValQual	RC	DF
VOLATILES	Dibromochloromethane	µg/L	0.25	U	U	---	1	0.25	U	U	---	1
VOLATILES	Dibromomethane	µg/L	0.25	U	U	---	1	0.25	U	U	---	1
VOLATILES	Dichlorodifluoromethane	µg/L	0.387	J	JL	15, 07	1	0.25	U	U	---	1
VOLATILES	Ethylbenzene	µg/L	0.25	U	U	---	1	0.25	U	U	---	1
VOLATILES	Hexachlorobutadiene	µg/L	0.25	U	U	---	1	0.25	U	U	---	1
VOLATILES	Isopropylbenzene	µg/L	0.25	U	U	---	1	0.25	U	U	---	1
VOLATILES	m,p-Xylenes	µg/L	0.5	U	U	---	1	0.5	U	U	---	1
VOLATILES	Methyl isobutyl ketone	µg/L	2.5	U	U	---	1	2.5	U	U	---	1
VOLATILES	Methylene chloride	µg/L	0.25	U	U	---	1	0.25	U	U	---	1
VOLATILES	Naphthalene	µg/L	0.2	U	U	---	1	0.2	U	U	---	1
VOLATILES	n-BUTYLBENZENE	µg/L	0.25	U	U	---	1	0.25	U	U	---	1
VOLATILES	n-PROPYLBENZENE	µg/L	0.125	U	U	---	1	0.125	U	U	---	1
VOLATILES	p-ISOPROPYLTOLUENE	µg/L	0.25	U	U	---	1	0.25	U	U	---	1
VOLATILES	sec-BUTYLBENZENE	µg/L	0.25	U	U	---	1	0.25	U	U	---	1
VOLATILES	Styrene	µg/L	0.125	U	U	---	1	0.125	U	U	---	1
VOLATILES	tert-BUTYLBENZENE	µg/L	0.25	U	U	---	1	0.25	U	U	---	1
VOLATILES	Tetrachloroethene	µg/L	0.25	U	U	---	1	0.25	U	U	---	1
VOLATILES	Toluene	µg/L	0.25	U	U	---	1	0.25	U	U	---	1
VOLATILES	trans-1,2-Dichloroethene	µg/L	0.25	U	U	---	1	0.25	U	U	---	1
VOLATILES	trans-1,3-Dichloropropene	µg/L	0.5	U	U	---	1	0.5	U	U	---	1
VOLATILES	Trichloroethene	µg/L	0.25	U	U	---	1	0.25	U	U	---	1
VOLATILES	Trichlorofluoromethane	µg/L	0.25	U	U	---	1	0.25	U	U	---	1
VOLATILES	Vinyl acetate	µg/L	2.5	U	UJ	05B	1	2.5	U	U	---	1
VOLATILES	Vinyl chloride	µg/L	0.25	U	U	---	1	0.25	U	U	---	1

Notes and Abbreviations:

05B - Compound % deviation QC criteria not met.
07 - Surrogate recoveries outside control limits.
15 - quantitation
µg/L - micrograms per Liter
DF - dilution factor
J - The analyte was positively identified; the reported value is the estimated concentration of the constituent detected in the sample analyzed.
L - Result may be biased low. Details are provided in the validation report.
RC - reason code
U - Not detected. The analyte was analyzed for, but not detected above the associated reporting limit.
UJ - The analyte was analyzed for, but not detected above the established reporting limit. However, review and evaluation of supporting QC data have indicated that the "non-detect" may be inaccurate or imprecise. The non-detect result should be estimatec

October 2008 Groundwater Data, LHAAP-46

		LOCATION_CODE	46WW02					46WW04					46WW05					46WW06				
		SAMPLE_NO	46WW02-102808					46WW04-102708					46WW05-100908					46WW06-100908				
		SAMPLE_DATE	28-Oct-08					27-Oct-08					9-Oct-08					9-Oct-08				
		SAMPLE_PURPOSE	REG					REG					REG					REG				
Test Group	Parameter	Units	Result	Qual	ValQual	DF	RC	Result	Qual	ValQual	DF	RC	Result	Qual	ValQual	DF	RC	Result	Qual	ValQual	DF	RC
METALS	Aluminum	mg/L						0.05	U	U	1											
METALS	Antimony	mg/L						0.00025	U	U	1											
METALS	Arsenic	mg/L						0.00449			1											
METALS	Barium	mg/L						0.0253			1											
METALS	Beryllium	mg/L						0.00051	J	J	1	15										
METALS	Cadmium	mg/L						0.00093			1											
METALS	Calcium	mg/L						436			10											
METALS	Chromium	mg/L						0.0909			1											
METALS	Cobalt	mg/L						0.0269			1											
METALS	Copper	mg/L						0.0115			1											
METALS	Iron	mg/L						2.23			1											
METALS	Lead	mg/L						0.00025	U	U	1											
METALS	Magnesium	mg/L						225			1											
METALS	Manganese	mg/L						1.1			50											
METALS	Mercury	mg/L						0.0001	U	U	1											
METALS	Nickel	mg/L						2.11			50											
METALS	Potassium	mg/L						2.97			1											
METALS	Selenium	mg/L						0.021			1											
METALS	Silver	mg/L						0.00025	U	U	1											
METALS	Sodium	mg/L						460			10											
METALS	Thallium	mg/L						0.00005	U	U	1											
METALS	Vanadium	mg/L						0.05	U	U	10											
METALS	Zinc	mg/L						0.0219			1											
VOLATILES	1,1,1,2-Tetrachloroethane	ug/L	0.25	U	U	1							0.25	U	U	1		0.25	U	U	1	
VOLATILES	1,1,1-Trichloroethane	ug/L	0.25	U	U	1							0.25	U	U	1		0.25	U	U	1	
VOLATILES	1,1,2,2-Tetrachloroethane	ug/L	0.125	U	U	1							0.125	U	U	1		0.125	U	U	1	
VOLATILES	1,1,2-Trichloroethane	ug/L	0.25	U	U	1							0.25	U	U	1		0.25	U	U	1	
VOLATILES	1,1-Dichloroethane	ug/L	0.125	U	U	1							0.125	U	U	1		0.125	U	U	1	
VOLATILES	1,1-Dichloroethene	ug/L	1.47			1							0.5	U	U	1		0.5	U	U	1	
VOLATILES	1,1-Dichloropropene	ug/L	0.25	U	U	1							0.25	U	U	1		0.25	U	U	1	
VOLATILES	1,2,3-Trichlorobenzene	ug/L	0.15	U	U	1							0.15	U	U	1		0.15	U	U	1	
VOLATILES	1,2,3-Trichloropropane	ug/L	0.5	U	U	1							0.5	U	U	1		0.5	U	U	1	
VOLATILES	1,2,4-Trichlorobenzene	ug/L	0.2	U	U	1							0.2	U	U	1		0.2	U	U	1	
VOLATILES	1,2,4-Trimethylbenzene	ug/L	0.25	U	U	1							0.25	U	U	1		0.25	U	U	1	
VOLATILES	1,2-Dibromo-3-chloropropane	ug/L	1	U	U	1							1	U	U	1		1	U	U	1	
VOLATILES	1,2-Dibromoethane	ug/L	0.25	U	U	1							0.25	U	U	1		0.25	U	U	1	
VOLATILES	1,2-Dichlorobenzene	ug/L	0.125	U	U	1							0.125	U	U	1		0.125	U	U	1	
VOLATILES	1,2-Dichloroethane	ug/L	0.25	U	U	1							0.25	U	U	1		0.25	U	U	1	
VOLATILES	1,2-Dichloropropane	ug/L	0.2	U	U	1							0.2	U	U	1		0.2	U	U	1	
VOLATILES	1,2-Dimethylbenzene (o-Xylene)	ug/L	0.25	U	U	1							0.25	U	U	1		0.25	U	U	1	
VOLATILES	1,3,5-Trimethylbenzene	ug/L	0.25	U	U	1							0.25	U	U	1		0.25	U	U	1	
VOLATILES	1,3-Dichlorobenzene	ug/L	0.25	U	U	1							0.25	U	U	1		0.25	U	U	1	
VOLATILES	1,3-Dichloropropane	ug/L	0.2	U	U	1							0.2	U	U	1		0.2	U	U	1	
VOLATILES	1,4-Dichlorobenzene	ug/L	0.125	U	U	1							0.125	U	U	1		0.125	U	U	1	
VOLATILES	2,2-Dichloropropane	ug/L	0.25	U	U	1							0.25	U	U	1		0.25	U	U	1	
VOLATILES	2-Butanone	ug/L	2.5	U	U	1							2.5	U	U	1		2.5	U	U	1	
VOLATILES	2-Chloroethyl vinyl ether	ug/L	2	U	U	1							2	U	U	1		2	U	U	1	
VOLATILES	2-Chlorotoluene	ug/L	0.125	U	U	1							0.125	U	U	1		0.125	U	U	1	
VOLATILES	2-Hexanone	ug/L	2.5	U	U	1							2.5	U	U	1		2.5	U	U	1	
VOLATILES	4-Chlorotoluene	ug/L	0.25	U	U	1							0.25	U	U	1		0.25	U	U	1	
VOLATILES	Acetone	ug/L	2.5	U	U	1							14.1			1		6.74	J	J	1	15
VOLATILES	Benzene	ug/L	0.125	U	U	1							0.125	U	U	1		0.125	U	U	1	
VOLATILES	Bromobenzene	ug/L	0.125	U	U	1							0.125	U	U	1		0.125	U	U	1	

October 2008 Groundwater Data, LHAAP-46

		LOCATION_CODE	46WW02					46WW04					46WW05					46WW06				
		SAMPLE_NO	46WW02-102808					46WW04-102708					46WW05-100908					46WW06-100908				
		SAMPLE_DATE	28-Oct-08					27-Oct-08					9-Oct-08					9-Oct-08				
		SAMPLE_PURPOSE	REG					REG					REG					REG				
Test Group	Parameter	Units	Result	Qual	ValQual	DF	RC	Result	Qual	ValQual	DF	RC	Result	Qual	ValQual	DF	RC	Result	Qual	ValQual	DF	RC
VOLATILES	Bromochloromethane	ug/L	0.2	U	U	1							0.2	U	U	1		0.2	U	U	1	
VOLATILES	Bromodichloromethane	ug/L	0.25	U	U	1							0.25	U	U	1		0.25	U	U	1	
VOLATILES	Bromoform	ug/L	0.5	U	U	1							0.5	U	U	1		0.5	U	U	1	
VOLATILES	Bromomethane	ug/L	0.5	U	U	1							0.5	U	U	1		0.5	U	U	1	
VOLATILES	Carbon disulfide	ug/L	0.5	U	U	1							0.5	U	U	1		0.5	U	U	1	
VOLATILES	Carbon tetrachloride	ug/L	0.25	U	U	1							0.25	U	U	1		0.25	U	U	1	
VOLATILES	Chlorobenzene	ug/L	0.125	U	U	1							0.125	U	U	1		0.125	U	U	1	
VOLATILES	Chloroethane	ug/L	0.5	U	U	1							0.5	U	U	1		0.5	U	U	1	
VOLATILES	Chloroform	ug/L	0.125	U	U	1							0.125	U	U	1		0.558	J	J,B	1	15, 06D
VOLATILES	Chloromethane	ug/L	0.25	U	U	1							1.75	B	J,B	1	06A, 06D, 11B	1.77	B	J,B	1	06A, 06D, 11B
VOLATILES	cis-1,2-Dichloroethene	ug/L	1.45			1							1.72			1		0.25	U	U	1	
VOLATILES	cis-1,3-Dichloropropene	ug/L	0.25	U	U	1							0.25	U	U	1		0.25	U	U	1	
VOLATILES	Dibromochloromethane	ug/L	0.25	U	U	1							0.25	U	U	1		0.25	U	U	1	
VOLATILES	Dibromomethane	ug/L	0.25	U	U	1							0.25	U	U	1		0.25	U	U	1	
VOLATILES	Dichlorodifluoromethane	ug/L	0.25	U	U	1							0.25	U	U	1		0.25	U	U	1	
VOLATILES	Ethylbenzene	ug/L	0.25	U	U	1							0.25	U	U	1		0.25	U	U	1	
VOLATILES	Hexachlorobutadiene	ug/L	0.25	U	U	1							0.25	U	U	1		0.25	U	U	1	
VOLATILES	Isopropylbenzene	ug/L	0.25	U	U	1							0.25	U	U	1		0.25	U	U	1	
VOLATILES	m,p-Xylenes	ug/L	0.5	U	U	1							0.5	U	U	1		0.5	U	U	1	
VOLATILES	Methyl isobutyl ketone	ug/L	2.5	U	U	1							2.5	U	U	1		2.5	U	U	1	
VOLATILES	Methylene chloride	ug/L	0.25	U	U	1							0.25	U	U	1		0.25	U	U	1	
VOLATILES	Naphthalene	ug/L	0.2	U	U	1							0.2	U	U	1		0.2	U	U	1	
VOLATILES	n-BUTYLBENZENE	ug/L	0.25	U	U	1							0.25	U	U	1		0.25	U	U	1	
VOLATILES	n-PROPYLBENZENE	ug/L	0.125	U	U	1							0.125	U	U	1		0.125	U	U	1	
VOLATILES	p-ISOPROPYLTOLUENE	ug/L	0.25	U	U	1							0.25	U	U	1		0.25	U	U	1	
VOLATILES	sec-BUTYLBENZENE	ug/L	0.25	U	U	1							0.25	U	U	1		0.25	U	U	1	
VOLATILES	Styrene	ug/L	0.125	U	U	1							0.125	U	U	1		0.125	U	U	1	
VOLATILES	tert-BUTYLBENZENE	ug/L	0.25	U	U	1							0.25	U	U	1		0.25	U	U	1	
VOLATILES	Tetrachloroethene	ug/L	0.25	U	U	1							0.25	U	U	1		0.25	U	U	1	
VOLATILES	Toluene	ug/L	0.25	U	U	1							0.25	U	U	1		0.25	U	U	1	
VOLATILES	trans-1,2-Dichloroethene	ug/L	0.25	U	U	1							0.25	U	U	1		0.25	U	U	1	
VOLATILES	trans-1,3-Dichloropropene	ug/L	0.5	U	U	1							0.5	U	U	1		0.5	U	U	1	
VOLATILES	Trichloroethene	ug/L	31.2			1							5.9			1		0.25	U	U	1	
VOLATILES	Trichlorofluoromethane	ug/L	0.25	U	U	1							0.25	U	U	1		0.25	U	U	1	
VOLATILES	Vinyl acetate	ug/L	2.5	U	U	1							2.5	U	U	1		2.5	U	U	1	
VOLATILES	Vinyl chloride	ug/L	0.25	U	U	1							0.25	U	U	1		0.25	U	U	1	

Notes and Abbreviations:

05B - Compound % deviation QC criteria not met.

07 - Surrogate recoveries outside control limits.

15 - quantitation

µg/L - micrograms per Liter

DF - dilution factor

J - The analyte was positively identified; the reported value is the estimated concentration of the constituent detected in the sample analyzed.

L - Result may be biased low. Details are provided in the validation report.

RC - reason code

U - Not detected. The analyte was analyzed for, but not detected above the associated reporting limit.

may be inaccurate or imprecise. The non-detect result should be estimated.

October 2008 Groundwater Data, LHAAP-46

		LOCATION_CODE	LHSMW11					LHSMW15					LHSMW20					LHSMW23				
		SAMPLE_NO	LHSMW11-102708					LHSMW15-102708					LHSMW20-102708					LHSMW23-102808				
		SAMPLE_DATE	27-Oct-08					27-Oct-08					27-Oct-08					28-Oct-08				
		SAMPLE_PURPOSE	REG					REG					REG					REG				
Test Group	Parameter	Units	Result	Qual	ValQual	DF	RC	Result	Qual	ValQual	DF	RC	Result	Qual	ValQual	DF	RC	Result	Qual	ValQual	DF	RC
METALS	Aluminum	mg/L	0.05	U	U	1		0.05	U	U	1							0.05	U	U	1	
METALS	Antimony	mg/L	0.00025	U	U	1		0.00025	U	U	1							0.00025	U	U	1	
METALS	Arsenic	mg/L	0.0072			1		0.00566			1							0.005			1	
METALS	Barium	mg/L	0.0512			1		0.0162			1							0.0216			1	
METALS	Beryllium	mg/L	0.0005	U	U	1		0.0005	U	U	1							0.0005	U	U	1	
METALS	Cadmium	mg/L	0.000391	J	J	1	15	0.00125			1							0.000496	J	J	1	15
METALS	Calcium	mg/L	281			1		509			100							324			1	
METALS	Chromium	mg/L	0.0316			1		0.226			1							0.0257			1	
METALS	Cobalt	mg/L	0.0334			1		0.0025	U	U	1							0.00486	J	J	1	15
METALS	Copper	mg/L	0.0814			1		0.0204			1							0.00333			1	
METALS	Iron	mg/L	0.815			1		0.025	U	U	1							0.654			1	
METALS	Lead	mg/L	0.00025	U	U	1		0.00025	U	U	1							0.00025	U	U	1	
METALS	Magnesium	mg/L	120			1		276			1							215			1	
METALS	Manganese	mg/L	0.743			50		0.0332			1							1.27			50	
METALS	Mercury	mg/L	0.0001	U	U	1		0.00029			1							0.0001	U	U	1	
METALS	Nickel	mg/L	3.59			50		0.975			50							0.0646			1	
METALS	Potassium	mg/L	0.265	J	J	1	15	2.65			1							2.04			1	
METALS	Selenium	mg/L	0.0321			1		0.0245			1							0.0228			1	
METALS	Silver	mg/L	0.00025	U	U	1		0.00025	U	U	1							0.00025	U	U	1	
METALS	Sodium	mg/L	630			10		1070			100							507			100	
METALS	Thallium	mg/L	0.0000545	J	J	1	15	9.38E-05	J	J	1	15						0.000143	J	J	1	15
METALS	Vanadium	mg/L	0.05	U	U	10		0.005	U	U	1							0.005	U	U	1	
METALS	Zinc	mg/L	0.0195	J	J	1	15	0.0501			1							0.025			1	
VOLATILES	1,1,1,2-Tetrachloroethane	ug/L						0.25	U	U	1		0.25	U	U	1		0.25	U	U	1	
VOLATILES	1,1,1-Trichloroethane	ug/L						0.25	U	U	1		0.25	U	U	1		0.25	U	U	1	
VOLATILES	1,1,2,2-Tetrachloroethane	ug/L						0.125	U	U	1		0.125	U	U	1		0.125	U	U	1	
VOLATILES	1,1,2-Trichloroethane	ug/L						0.25	U	U	1		0.25	U	U	1		0.25	U	U	1	
VOLATILES	1,1-Dichloroethane	ug/L						0.125	U	U	1		0.125	U	U	1		0.125	U	U	1	
VOLATILES	1,1-Dichloroethene	ug/L						0.5	U	U	1		0.5	U	U	1		0.789	J	J	1	15
VOLATILES	1,1-Dichloropropene	ug/L						0.25	U	U	1		0.25	U	U	1		0.25	U	U	1	
VOLATILES	1,2,3-Trichlorobenzene	ug/L						0.15	U	U	1		0.15	U	U	1		0.15	U	U	1	
VOLATILES	1,2,3-Trichloropropane	ug/L						0.5	U	U	1		0.5	U	U	1		0.5	U	U	1	
VOLATILES	1,2,4-Trichlorobenzene	ug/L						0.2	U	U	1		0.2	U	U	1		0.2	U	U	1	
VOLATILES	1,2,4-Trimethylbenzene	ug/L						0.25	U	U	1		0.25	U	U	1		0.25	U	U	1	
VOLATILES	1,2-Dibromo-3-chloropropane	ug/L						1	U	U	1		1	U	U	1		1	U	U	1	
VOLATILES	1,2-Dibromoethane	ug/L						0.25	U	U	1		0.25	U	U	1		0.25	U	U	1	
VOLATILES	1,2-Dichlorobenzene	ug/L						0.125	U	U	1		0.125	U	U	1		0.125	U	U	1	
VOLATILES	1,2-Dichloroethane	ug/L						0.25	U	U	1		0.25	U	U	1		0.25	U	U	1	
VOLATILES	1,2-Dichloropropane	ug/L						0.2	U	U	1		0.2	U	U	1		0.2	U	U	1	
VOLATILES	1,2-Dimethylbenzene (o-Xylene)	ug/L						0.25	U	U	1		0.25	U	U	1		0.25	U	U	1	
VOLATILES	1,3,5-Trimethylbenzene	ug/L						0.25	U	U	1		0.25	U	U	1		0.25	U	U	1	
VOLATILES	1,3-Dichlorobenzene	ug/L						0.25	U	U	1		0.25	U	U	1		0.25	U	U	1	
VOLATILES	1,3-Dichloropropane	ug/L						0.2	U	U	1		0.2	U	U	1		0.2	U	U	1	
VOLATILES	1,4-Dichlorobenzene	ug/L						0.125	U	U	1		0.125	U	U	1		0.125	U	U	1	
VOLATILES	2,2-Dichloropropane	ug/L						0.25	U	U	1		0.25	U	U	1		0.25	U	U	1	
VOLATILES	2-Butanone	ug/L						2.5	U	U	1		2.5	U	U	1		2.5	U	U	1	
VOLATILES	2-Chloroethyl vinyl ether	ug/L						2	U	U	1		2	U	U	1		2	U	U	1	
VOLATILES	2-Chlorotoluene	ug/L						0.125	U	U	1		0.125	U	U	1		0.125	U	U	1	
VOLATILES	2-Hexanone	ug/L						2.5	U	U	1		2.5	U	U	1		2.5	U	U	1	
VOLATILES	4-Chlorotoluene	ug/L						0.25	U	U	1		0.25	U	U	1		0.25	U	U	1	
VOLATILES	Acetone	ug/L						2.5	U	U	1		2.5	U	U	1		2.5	U	U	1	
VOLATILES	Benzene	ug/L						0.125	U	U	1		0.125	U	U	1		0.125	U	U	1	
VOLATILES	Bromobenzene	ug/L						0.125	U	U	1		0.125	U	U	1		0.125	U	U	1	

October 2008 Groundwater Data, LHAAP-46

		LOCATION_CODE	LHSMW11					LHSMW15					LHSMW20					LHSMW23				
		SAMPLE_NO	LHSMW11-102708					LHSMW15-102708					LHSMW20-102708					LHSMW23-102808				
		SAMPLE_DATE	27-Oct-08					27-Oct-08					27-Oct-08					28-Oct-08				
		SAMPLE_PURPOSE	REG					REG					REG					REG				
Test Group	Parameter	Units	Result	Qual	ValQual	DF	RC	Result	Qual	ValQual	DF	RC	Result	Qual	ValQual	DF	RC	Result	Qual	ValQual	DF	RC
VOLATILES	Bromochloromethane	ug/L						0.2	U	U	1		0.2	U	U	1		0.2	U	U	1	
VOLATILES	Bromodichloromethane	ug/L						0.25	U	U	1		0.25	U	U	1		0.25	U	U	1	
VOLATILES	Bromoform	ug/L						0.5	U	U	1		0.5	U	U	1		0.5	U	U	1	
VOLATILES	Bromomethane	ug/L						0.5	U	U	1		0.5	U	U	1		0.5	U	U	1	
VOLATILES	Carbon disulfide	ug/L						0.5	U	U	1		0.5	U	U	1		0.5	U	U	1	
VOLATILES	Carbon tetrachloride	ug/L						0.25	U	U	1		0.25	U	U	1		0.25	U	U	1	
VOLATILES	Chlorobenzene	ug/L						0.125	U	U	1		0.125	U	U	1		0.125	U	U	1	
VOLATILES	Chloroethane	ug/L						0.5	U	U	1		0.5	U	U	1		0.5	U	U	1	
VOLATILES	Chloroform	ug/L						0.125	U	U	1		0.125	U	U	1		0.125	U	U	1	
VOLATILES	Chloromethane	ug/L						0.25	U	U	1		0.25	U	U	1		0.25	U	U	1	
VOLATILES	cis-1,2-Dichloroethene	ug/L						0.25	U	U	1		0.25	U	U	1		0.614	J	J	1	15
VOLATILES	cis-1,3-Dichloropropene	ug/L						0.25	U	U	1		0.25	U	U	1		0.25	U	U	1	
VOLATILES	Dibromochloromethane	ug/L						0.25	U	U	1		0.25	U	U	1		0.25	U	U	1	
VOLATILES	Dibromomethane	ug/L						0.25	U	U	1		0.25	U	U	1		0.25	U	U	1	
VOLATILES	Dichlorodifluoromethane	ug/L						0.25	U	U	1		0.25	U	U	1		0.25	U	U	1	
VOLATILES	Ethylbenzene	ug/L						0.25	U	U	1		0.25	U	U	1		0.25	U	U	1	
VOLATILES	Hexachlorobutadiene	ug/L						0.25	U	U	1		0.25	U	U	1		0.25	U	U	1	
VOLATILES	Isopropylbenzene	ug/L						0.25	U	U	1		0.25	U	U	1		0.25	U	U	1	
VOLATILES	m,p-Xylenes	ug/L						0.5	U	U	1		0.5	U	U	1		0.5	U	U	1	
VOLATILES	Methyl isobutyl ketone	ug/L						2.5	U	U	1		2.5	U	U	1		2.5	U	U	1	
VOLATILES	Methylene chloride	ug/L						0.25	U	U	1		0.25	U	U	1		0.25	U	U	1	
VOLATILES	Naphthalene	ug/L						0.2	U	U	1		0.2	U	U	1		0.2	U	U	1	
VOLATILES	n-BUTYLBENZENE	ug/L						0.25	U	U	1		0.25	U	U	1		0.25	U	U	1	
VOLATILES	n-PROPYLBENZENE	ug/L						0.125	U	U	1		0.125	U	U	1		0.125	U	U	1	
VOLATILES	p-ISOPROPYLTOLUENE	ug/L						0.25	U	U	1		0.25	U	U	1		0.25	U	U	1	
VOLATILES	sec-BUTYLBENZENE	ug/L						0.25	U	U	1		0.25	U	U	1		0.25	U	U	1	
VOLATILES	Styrene	ug/L						0.125	U	U	1		0.125	U	U	1		0.125	U	U	1	
VOLATILES	tert-BUTYLBENZENE	ug/L						0.25	U	U	1		0.25	U	U	1		0.25	U	U	1	
VOLATILES	Tetrachloroethene	ug/L						0.25	U	U	1		0.25	U	U	1		0.25	U	U	1	
VOLATILES	Toluene	ug/L						0.25	U	U	1		0.25	U	U	1		0.25	U	U	1	
VOLATILES	trans-1,2-Dichloroethene	ug/L						0.25	U	U	1		0.25	U	U	1		1.02			1	
VOLATILES	trans-1,3-Dichloropropene	ug/L						0.5	U	U	1		0.5	U	U	1		0.5	U	U	1	
VOLATILES	Trichloroethene	ug/L						0.25	U	U	1		0.25	U	U	1		2.51			1	
VOLATILES	Trichlorofluoromethane	ug/L						0.25	U	U	1		0.25	U	U	1		0.25	U	U	1	
VOLATILES	Vinyl acetate	ug/L						2.5	U	U	1		2.5	U	U	1		2.5	U	U	1	
VOLATILES	Vinyl chloride	ug/L						0.25	U	U	1		0.25	U	U	1		0.412	J	J,H	1	15, 11A

Notes and Abbreviations:

05B - Compound % deviation QC criteria not met.

07 - Surrogate recoveries outside control limits.

15 - quantitation

µg/L - micrograms per Liter

DF - dilution factor

J - The analyte was positively identified; the reported value is the estimated conc

L - Result may be biased low. Details are provided in the validation report.

RC - reason code

U - Not detected. The analyte was analyzed for, but not detected above the asso

may be inaccurate or imprecise. The non-detect result should be estimated.

October 2008 Groundwater Data, LHAAP-46

		LOCATION_CODE	LHSMW25					LHSMW25				
		SAMPLE_NO	LHSMW25-102808					LHSMW25-102808-QA				
		SAMPLE_DATE	28-Oct-08					28-Oct-08				
		SAMPLE_PURPOSE	REG					FD				
Test Group	Parameter	Units	Result	Qual	ValQual	DF	RC	Result	Qual	ValQual	DF	RC
METALS	Aluminum	mg/L										
METALS	Antimony	mg/L										
METALS	Arsenic	mg/L										
METALS	Barium	mg/L										
METALS	Beryllium	mg/L										
METALS	Cadmium	mg/L										
METALS	Calcium	mg/L										
METALS	Chromium	mg/L										
METALS	Cobalt	mg/L										
METALS	Copper	mg/L										
METALS	Iron	mg/L										
METALS	Lead	mg/L										
METALS	Magnesium	mg/L										
METALS	Manganese	mg/L										
METALS	Mercury	mg/L										
METALS	Nickel	mg/L										
METALS	Potassium	mg/L										
METALS	Selenium	mg/L										
METALS	Silver	mg/L										
METALS	Sodium	mg/L										
METALS	Thallium	mg/L										
METALS	Vanadium	mg/L										
METALS	Zinc	mg/L										
VOLATILES	1,1,1,2-Tetrachloroethane	ug/L	0.25	U	U	1		0.25	U	U	1	
VOLATILES	1,1,1-Trichloroethane	ug/L	0.25	U	U	1		0.25	U	U	1	
VOLATILES	1,1,2,2-Tetrachloroethane	ug/L	0.125	U	U	1		0.125	U	U	1	
VOLATILES	1,1,2-Trichloroethane	ug/L	0.25	U	U	1		0.25	U	U	1	
VOLATILES	1,1-Dichloroethane	ug/L	0.125	U	U	1		0.125	U	U	1	
VOLATILES	1,1-Dichloroethene	ug/L	0.5	U	U	1		0.5	U	U	1	
VOLATILES	1,1-Dichloropropene	ug/L	0.25	U	U	1		0.25	U	U	1	
VOLATILES	1,2,3-Trichlorobenzene	ug/L	0.15	U	U	1		0.15	U	U	1	
VOLATILES	1,2,3-Trichloropropane	ug/L	0.5	U	U	1		0.5	U	U	1	
VOLATILES	1,2,4-Trichlorobenzene	ug/L	0.2	U	U	1		0.2	U	U	1	
VOLATILES	1,2,4-Trimethylbenzene	ug/L	0.25	U	U	1		0.25	U	U	1	
VOLATILES	1,2-Dibromo-3-chloropropane	ug/L	1	U	U	1		1	U	U	1	
VOLATILES	1,2-Dibromoethane	ug/L	0.25	U	U	1		0.25	U	U	1	
VOLATILES	1,2-Dichlorobenzene	ug/L	0.125	U	U	1		0.125	U	U	1	
VOLATILES	1,2-Dichloroethane	ug/L	0.25	U	UJ,H	1	08A	0.25	U	U	1	
VOLATILES	1,2-Dichloropropane	ug/L	0.2	U	U	1		0.2	U	U	1	
VOLATILES	1,2-Dimethylbenzene (o-Xylene)	ug/L	0.25	U	U	1		0.25	U	U	1	
VOLATILES	1,3,5-Trimethylbenzene	ug/L	0.25	U	U	1		0.25	U	U	1	
VOLATILES	1,3-Dichlorobenzene	ug/L	0.25	U	U	1		0.25	U	U	1	
VOLATILES	1,3-Dichloropropane	ug/L	0.2	U	U	1		0.2	U	U	1	
VOLATILES	1,4-Dichlorobenzene	ug/L	0.125	U	U	1		0.125	U	U	1	
VOLATILES	2,2-Dichloropropane	ug/L	0.25	U	U	1		0.25	U	U	1	
VOLATILES	2-Butanone	ug/L	2.5	U	U	1		2.5	U	U	1	
VOLATILES	2-Chloroethyl vinyl ether	ug/L	2	U	U	1		2	U	U	1	
VOLATILES	2-Chlorotoluene	ug/L	0.125	U	U	1		0.125	U	U	1	
VOLATILES	2-Hexanone	ug/L	2.5	U	U	1		2.5	U	U	1	
VOLATILES	4-Chlorotoluene	ug/L	0.25	U	U	1		0.25	U	U	1	
VOLATILES	Acetone	ug/L	2.5	U	UJ,H	1	08A	2.5	U	U	1	
VOLATILES	Benzene	ug/L	0.125	U	U	1		0.125	U	U	1	
VOLATILES	Bromobenzene	ug/L	0.125	U	U	1		0.125	U	U	1	

October 2008 Groundwater Data, LHAAP-46

		LOCATION_CODE	LHSMW25					LHSMW25				
		SAMPLE_NO	LHSMW25-102808					LHSMW25-102808-QA				
		SAMPLE_DATE	28-Oct-08					28-Oct-08				
		SAMPLE_PURPOSE	REG					FD				
Test Group	Parameter	Units	Result	Qual	ValQual	DF	RC	Result	Qual	ValQual	DF	RC
VOLATILES	Bromochloromethane	ug/L	0.2	U	U	1		0.2	U	U	1	
VOLATILES	Bromodichloromethane	ug/L	0.25	U	UJ,H	1	08A	0.25	U	U	1	
VOLATILES	Bromoform	ug/L	0.5	U	U	1		0.5	U	U	1	
VOLATILES	Bromomethane	ug/L	0.5	U	U	1		0.5	U	U	1	
VOLATILES	Carbon disulfide	ug/L	0.5	U	UJ,L	1	08A	0.5	U	U	1	
VOLATILES	Carbon tetrachloride	ug/L	0.25	U	U	1		0.25	U	U	1	
VOLATILES	Chlorobenzene	ug/L	0.125	U	U	1		0.125	U	U	1	
VOLATILES	Chloroethane	ug/L	0.5	U	U	1		0.5	U	U	1	
VOLATILES	Chloroform	ug/L	0.125	U	UJ,H	1	08A	0.125	U	U	1	
VOLATILES	Chloromethane	ug/L	0.25	U	U	1		0.25	U	U	1	
VOLATILES	cis-1,2-Dichloroethene	ug/L	0.25	U	U	1		0.25	U	U	1	
VOLATILES	cis-1,3-Dichloropropene	ug/L	0.25	U	U	1		0.25	U	U	1	
VOLATILES	Dibromochloromethane	ug/L	0.25	U	U	1		0.25	U	U	1	
VOLATILES	Dibromomethane	ug/L	0.25	U	UJ,H	1	08A	0.25	U	U	1	
VOLATILES	Dichlorodifluoromethane	ug/L	0.25	U	UJ,H	1	08A	0.25	U	U	1	
VOLATILES	Ethylbenzene	ug/L	0.25	U	U	1		0.25	U	U	1	
VOLATILES	Hexachlorobutadiene	ug/L	0.25	U	U	1		0.25	U	U	1	
VOLATILES	Isopropylbenzene	ug/L	0.25	U	U	1		0.25	U	U	1	
VOLATILES	m,p-Xylenes	ug/L	0.5	U	U	1		0.5	U	U	1	
VOLATILES	Methyl isobutyl ketone	ug/L	2.5	U	U	1		2.5	U	U	1	
VOLATILES	Methylene chloride	ug/L	0.25	U	U	1		0.25	U	U	1	
VOLATILES	Naphthalene	ug/L	0.2	U	U	1		0.2	U	U	1	
VOLATILES	n-BUTYLBENZENE	ug/L	0.25	U	U	1		0.25	U	U	1	
VOLATILES	n-PROPYLBENZENE	ug/L	0.125	U	U	1		0.125	U	U	1	
VOLATILES	p-ISOPROPYLTOLUENE	ug/L	0.25	U	U	1		0.25	U	U	1	
VOLATILES	sec-BUTYLBENZENE	ug/L	0.25	U	U	1		0.25	U	U	1	
VOLATILES	Styrene	ug/L	0.125	U	U	1		0.125	U	U	1	
VOLATILES	tert-BUTYLBENZENE	ug/L	0.25	U	U	1		0.25	U	U	1	
VOLATILES	Tetrachloroethene	ug/L	0.25	U	U	1		0.25	U	U	1	
VOLATILES	Toluene	ug/L	0.25	U	U	1		0.25	U	U	1	
VOLATILES	trans-1,2-Dichloroethene	ug/L	0.25	U	U	1		0.25	U	U	1	
VOLATILES	trans-1,3-Dichloropropene	ug/L	0.5	U	U	1		0.5	U	U	1	
VOLATILES	Trichloroethene	ug/L	0.25	U	U	1		0.25	U	U	1	
VOLATILES	Trichlorofluoromethane	ug/L	0.25	U	U	1		0.25	U	U	1	
VOLATILES	Vinyl acetate	ug/L	2.5	U	U	1		2.5	U	U	1	
VOLATILES	Vinyl chloride	ug/L	0.25	U	UJ,H	1	08A	0.25	U	U	1	

Notes and Abbreviations:

05B - Compound % deviation QC criteria not met.

07 - Surrogate recoveries outside control limits.

15 - quantitation

µg/L - micrograms per Liter

DF - dilution factor

J - The analyte was positively identified; the reported value is the estimated conc

L - Result may be biased low. Details are provided in the validation report.

RC - reason code

U - Not detected. The analyte was analyzed for, but not detected above the asso

may be inaccurate or imprecise. The non-detect result should be estimated.

Longhorn Groundwater Elevations
2007
(Shallow Zone)

SITE	LOCATION	TOC_ELEV	DTW	Date	GW Elev	EAST	NORTH
LHAAP-04	04WW01	212.51	11.20	12/3/07	201.31	3305911.786	6958971.173
LHAAP-04	04WW02	216.70	11.26	12/3/07	205.44	3305973.89	6959284.718
LHAAP-04	04WW03	215.93	19.75	12/3/07	196.18	3306189.503	6959561.995
LHAAP-08	08WW01	199.31	17.49	12/2/07	181.82	3310498.194	6958043.017
LHAAP-08	08WW02	200.29	dry	12/2/07	NA	3310710.324	6957877.092
LHAAP-29	114	244.47	30.19	12/3/07	214.28	3304340.31	6954927.63
LHAAP-29	115	225.16	35.41	12/3/07	189.75	3306408.88	6955339.37
LHAAP-29	116	216.43	28.59	12/3/07	187.84	3307307.73	6956570.57
LHAAP-29	117	214.19	27.27	12/3/07	186.92	3307818.16	6955986.92
LHAAP-29	118	219.67	28.98	12/3/07	190.69	3306827.1	6954936.48
LHAAP-29	119	222.93	dry	12/3/07	NA	3305405.48	6953564.81
LHAAP-29	29WW01	242.27	29.67	12/3/07	212.60	3304360	6954745
LHAAP-29	29WW02	235.77	38.25	12/3/07	197.52	3305379	6954799
LHAAP-29	29WW03	237.79	28.02	12/3/07	209.77	3304748	6954593
LHAAP-29	29WW05	208.95	19.39	12/3/07	189.56	3307350.28	6956448.88
LHAAP-29	29WW06	210.34	31.04	12/3/07	179.30	3306918	6956475
LHAAP-29	29WW07	212.24	27.92	12/3/07	184.32	3306827.53	6956143.96
LHAAP-29	29WW09	211.02	28.90	12/3/07	182.12	3307426	6956263
LHAAP-29	29WW10	204.95	27.29	12/3/07	177.66	3307649.67	6956781.91
LHAAP-29	29WW11	205.68	27.40	12/3/07	178.28	3307273.12	6957154.41
LHAAP-29	29WW12	223.27	dry	12/3/07	NA	3306593	6956902
LHAAP-29	29WW15	232.98	dry	12/3/07	NA	3306147.35	6955848.18
LHAAP-29	29WW17	230.48	30.63	12/3/07	199.85	3306214.01	6956008.92
LHAAP-29	29WW18	231.18	27.12	12/3/07	204.06	3306009.92	6956001.59
LHAAP-29	29WW19	220.69	25.18	12/3/07	195.51	3306313.23	6955615.89
LHAAP-29	29WW20	235.70	dry	12/3/07	NA	3305796.91	6955633.6
LHAAP-29	29WW22	236.10	31.15	12/3/07	204.95	3305672.39	6955679.06
LHAAP-29	29WW23	226.63	28.25	12/3/07	198.38	3305947.46	6955278.42
LHAAP-29	29WW25	227.37	29.92	12/3/07	197.45	3305755.14	6955024.95
LHAAP-29	29WW26	237.21	32.10	12/3/07	205.11	3305525.92	6955380.31
LHAAP-29	29WW27	238.02	29.31	12/3/07	208.71	3305338.36	6955350.88
LHAAP-29	29WW29	242.91	34.16	12/3/07	208.75	3305155.2	6954826.84
LHAAP-29	29WW30	241.47	30.94	12/3/07	210.53	3304987.91	6955034.55
LHAAP-29	29WW32	229.09	29.61	12/3/07	199.48	3305093.85	6954345.88
LHAAP-29	29WW36	234.02	29.83	12/3/07	204.19	3305879.737	6956665.96
LHAAP-29	29WW38	220.99	31.91	12/3/07	189.08	3307030.402	6955376.315
LHAAP-35A	35AWW03	219.66	dry	12/2/07	NA	3305010.72	6960396.75
LHAAP-35A	35AWW04	220.66	dry	12/3/07	NA	3304656.3	6959446.59
LHAAP-35A	LHSMW01	214.43	9.87	12/3/07	204.56	3306087.69	6959159.79
LHAAP-35A	LHSMW03	217.26	25.80	12/2/07	191.46	3305514.36	6959937.72
LHAAP-35A	LHSMW04	216.95	25.09	12/3/07	191.86	3305398.12	6960185.99
LHAAP-35A	LHSMW05	217.59	dry	12/2/07	NA	3305078.951	6960157.789
LHAAP-35A	LHSMW07	221.27	17.89	12/2/07	203.38	3304408.12	6959841.17
LHAAP-35B	35BWW01	202.88	18.24	12/1/07	184.64	3307815.51	6958331
LHAAP-35B	35BWW02	203.95	dry	12/1/07	NA	3308367.35	6958110.46
LHAAP-35B	35BWW04	202.11	20.07	12/1/07	182.04	3308166.14	6958058.09
LHAAP-35B	35BWW05	202.57	20.35	12/1/07	182.22	3308006.58	6958213.49
LHAAP-35B	35BWW07	203.53	22.84	12/1/07	180.69	3308800.14	6958244.99
LHAAP-35B	35BWW08	204.12	21.59	12/1/07	182.53	3307873.99	6958133.10
LHAAP-35B	LHSMW58	203.56	22.41	12/1/07	181.15	3308108.48	6958036.44
LHAAP-46	46WW01	212.82	dry	12/2/07	NA	3306046.3	6962839.74

Longhorn Groundwater Elevations
2007
(Shallow Zone)

SITE	LOCATION	TOC_ELEV	DTW	Date	GW Elev	EAST	NORTH
LHAAP-46	46WW04	215.39	22.68	12/2/07	192.71	3305584.77	6962709.27
LHAAP-46	LHSMW09	210.68	21.50	12/2/07	189.18	3306348.65	6961074.99
LHAAP-46	LHSMW11	212.91	23.10	12/2/07	189.81	3305792.93	6961100.93
LHAAP-46	LHSMW12	209.02	dry	12/2/07	NA	3306021.93	6961387.04
LHAAP-46	LHSMW13	209.50	dry	12/2/07	NA	3306005.55	6961754.85
LHAAP-46	LHSMW14	244.78	13.94	12/2/07	230.84	3303935.98	6962600.77
LHAAP-46	LHSMW15	226.65	dry	12/2/07	NA	3304451.98	6962630.67
LHAAP-46	LHSMW16	232.19	17.00	12/2/07	215.19	3304181.02	6962728.61
LHAAP-46	LHSMW17	214.58	26.49	12/2/07	188.09	3305920.58	6962318.35
LHAAP-46	LHSMW18	215.35	22.97	12/2/07	192.38	3305918.42	6962572.94
LHAAP-46	LHSMW19	212.96	dry	12/2/07	NA	3305863.42	6962939.93
LHAAP-46	LHSMW20	209.29	22.17	12/2/07	187.12	3306305.05	6963272.98
LHAAP-46	LHSMW21	207.67	19.74	12/2/07	187.93	3306499.52	6963621.13
LHAAP-46	LHSMW22	209.60	25.83	12/2/07	183.77	3306377.68	6962766.71
LHAAP-46	LHSMW24	203.84	23.00	12/2/07	180.84	3307057.41	6963099.29
LHAAP-46	LHSMW26	204.72	26.37	12/2/07	178.35	3307440.02	6962398.18
LHAAP-46	LHSMW27	202.10	dry	12/1/07	NA	3307262.99	6962173.9
LHAAP-47	105	199.41	20.25	12/2/07	179.16	3310068.4	6960331.5
LHAAP-47	47WW01	194.40	19.12	11/30/07	175.28	3310000.12	6961843.18
LHAAP-47	47WW02	197.23	19.76	12/1/07	177.47	3309378.17	6961934.03
LHAAP-47	47WW03	195.24	20.15	12/1/07	175.09	3310493.93	6961546.93
LHAAP-47	47WW04	190.90	15.80	11/30/07	175.10	3310838.47	6960690.1
LHAAP-47	47WW05	198.55	20.78	11/30/07	177.77	3309848.45	6960821.11
LHAAP-47	47WW08	199.45	dry	11/29/07	NA	3309353.97	6961102.58
LHAAP-47	47WW11	199.14	21.95	11/30/07	177.19	3310298.06	6959699.09
LHAAP-47	47WW12	202.27	dry	11/30/07	NA	3309114.13	6960442.63
LHAAP-47	47WW13	204.97	11.83	11/29/07	193.14	3308809.1	6959590.22
LHAAP-47	47WW16	203.73	dry	12/1/07	NA	3308477.27	6959895.12
LHAAP-47	47WW17	201.76	dry	12/1/07	NA	3309316.44	6959040.27
LHAAP-47	47WW18	199.69	21.86	11/30/07	177.83	3310398.27	6959236.15
LHAAP-47	47WW21	187.59	14.75	12/1/07	172.84	3311452.33	6959832.47
LHAAP-47	47WW22	195.62	21.83	11/29/07	173.79	3311719.32	6959044.08
LHAAP-47	47WW23	197.86	12.61	12/1/07	185.25	3311242.96	6958503.8
LHAAP-47	47WW24	207.90	dry	12/1/07	NA	3307965.291	6959433.332
LHAAP-47	47WW25	208.53	26.94	12/1/07	181.59	3307856.194	6959089.921
LHAAP-47	47WW26	203.99	dry	12/1/07	NA	3309317.473	6958409.003
LHAAP-47	47WW27	200.97	20.24	12/1/07	180.73	3309015.213	6957917.773
LHAAP-47	47WW28	194.43	19.00	12/1/07	175.43	3310852.66	6960058.22
LHAAP-47	47WW30	197.12	21.50	11/30/07	175.62	3310472.40	6961047.19
LHAAP-47	47WW32	193.82	21.75	11/30/07	172.07	3311345.92	6961495.38
LHAAP-47	LHSMW28	205.52	dry	12/1/07	NA	3307687.68	6960929.52
LHAAP-47	LHSMW29	203.24	dry	12/1/07	NA	3308072.27	6960870.26
LHAAP-47	LHSMW30	203.74	dry	12/1/07	NA	3308292.41	6960875.45
LHAAP-47	LHSMW31	201.03	22.37	12/1/07	178.66	3308967.29	6961159.76
LHAAP-47	LHSMW32	200.18	dry	12/1/07	NA	3308982.12	6961386.69
LHAAP-47	LHSMW33	199.39	dry	12/1/07	NA	3309334.56	6961289.52
LHAAP-47	LHSMW34	198.59	21.25	12/1/07	177.34	3309336.51	6961492.68
LHAAP-47	LHSMW35	198.37	21.31	12/1/07	177.06	3309372.86	6961685.43
LHAAP-47	LHSMW36	196.53	20.26	12/1/07	176.27	3309579.44	6961872.42
LHAAP-47	LHSMW37	195.18	19.63	12/1/07	175.55	3309709.41	6962063.52
LHAAP-47	LHSMW38	200.84	22.50	12/1/07	178.34	3308183.93	6961505.71

Longhorn Groundwater Elevations
2007
(Shallow Zone)

SITE	LOCATION	TOC_ELEV	DTW	Date	GW Elev	EAST	NORTH
LHAAP-47	LHSMW39	198.71	dry	11/30/07	NA	3309910.17	6960715.16
LHAAP-47	LHSMW40	199.99	dry	11/30/07	NA	3309952.76	6960415.08
LHAAP-47	LHSMW41	199.85	21.50	11/30/07	178.35	3309724.81	6960514.8
LHAAP-47	LHSMW42	200.29	21.23	11/30/07	179.06	3309660.32	6960354.74
LHAAP-47	LHSMW43	200.26	20.73	12/1/07	179.53	3309632.51	6960009.65
LHAAP-47	LHSMW44	200.36	20.85	11/30/07	179.51	3309302.29	6960305.01
LHAAP-47	LHSMW45	201.39	21.34	12/1/07	180.05	3309140.91	6960145.58
LHAAP-47	LHSMW46	201.72	dry	12/1/07	NA	3309392.38	6959763.44
LHAAP-47	LHSMW47	200.54	dry	12/1/07	NA	3309339.52	6959602.92
LHAAP-47	LHSMW48	202.06	dry	12/1/07	NA	3309435.63	6959322.73
LHAAP-47	LHSMW49	201.74	dry	12/1/07	NA	3309024.61	6959475.7
LHAAP-47	LHSMW50	205.17	23.46	12/1/07	181.71	3308464.11	6959084.87
LHAAP-47	LHSMW51	208.50	dry	12/1/07	NA	3307496.83	6959185.29
LHAAP-47	LHSMW52	205.91	24.46	12/1/07	181.45	3308621.6	6958448.8
LHAAP-47	LHSMW53	197.61	dry	12/1/07	NA	3309903.12	6958096.73
LHAAP-47	LHSMW55	199.76	dry	11/30/07	NA	3310174.99	6959043.13
LHAAP-47	LHSMW56	198.59	21.30	11/30/07	177.29	3310570.56	6959009.13
LHAAP-47	LHSMW57	200.53	dry	11/30/07	NA	3310398.96	6959436.18
LHAAP-47	LHSMW60	199.28	19.01	12/1/07	180.27	3309451.7	6957945.07
LHAAP-49	49WW01	232.01	27.56	12/3/07	204.45	3304439.76	6957833.57
LHAAP-49	49WW02	232.92	dry	12/3/07	NA	3303973.53	6957381.31
LHAAP-49	49WW03	232.09	24.09	12/3/07	208.00	3304181.87	6957653.35
LHAAP-50	50WW01	198.50	18.14	12/1/07	180.36	3309311	6957599.96
LHAAP-50	50WW02	200.74	20.69	12/1/07	180.05	3309569.44	6957436.64
LHAAP-50	50WW03	202.94	21.57	12/1/07	181.37	3309376.1	6957162.82
LHAAP-50	50WW05	197.68	18.67	12/1/07	179.01	3309709.686	6957581.445
LHAAP-58	LHSMW06	223.18	18.66	12/2/07	204.52	3304628.53	6960079.99
LHAAP-67	67WW01	200.89	23.96	12/2/07	176.93	3311444.82	6956911.4
LHAAP-67	67WW02	199.79	22.61	12/2/07	177.18	3311390.65	6957060.76
LHAAP-67	67WW03	200.19	23.28	12/2/07	176.91	3311534.45	6957010.74
LHAAP-67	67WW04	203.76	dry	12/2/07	NA	3311590.753	6956536.519
LHAAP-67	67WW05	201.00	23.23	12/2/07	177.77	3311095.986	6957105.216
LHAAP-67	67WW07	200.84	23.97	12/2/07	176.87	3311722.975	6956894.798

Longhorn Groundwater Elevations
2007
(Intermediate Zone)

GROUP	LOCATION	TOC_ELEV	DTW	Date	GW Elev	EAST	NORTH
AREA 29	29WW13	222.92	37.07	12/3/07	185.85	3306603.000	6956912.000
AREA 29	29WW14	220.31	33.40	12/3/07	186.91	3306818.250	6956121.600
AREA 29	29WW16	231.53	45.00	12/3/07	186.53	3306135.480	6955854.850
AREA 29	29WW21	235.17	47.85	12/3/07	187.32	3305660.660	6955666.330
AREA 29	29WW24	226.14	36.60	12/3/07	189.54	3305951.530	6955289.190
AREA 29	29WW28	235.38	45.33	12/3/07	190.05	3305391.000	6954799.000
AREA 29	29WW31	240.97	30.99	12/3/07	209.98	3304989.850	6955019.220
AREA 29	29WW33	237.67	28.37	12/3/07	209.30	3304759.000	6954608.000
AREA 35A	35AWW01	218.03	37.08	12/2/07	180.95	3305092.610	6960170.970
AREA 46	46WW02	212.21	32.10	12/2/07	180.11	3306068.170	6962842.600
AREA 46	LHSMW08	207.85	25.61	12/2/07	182.24	3306617.020	6961325.200
AREA 46	LHSMW23	208.82	27.33	12/2/07	181.49	3306469.070	6962446.760
AREA 46	LHSMW25	201.97	25.41	12/2/07	176.56	3307259.520	6963255.590
AREA 47	47WW06	199.02	21.27	11/30/07	177.75	3309845.610	6960826.260
AREA 47	47WW09	201.04	21.37	11/29/07	179.67	3309623.610	6960006.040
AREA 47	47WW14	205.00	23.75	12/1/07	181.25	3308802.090	6959587.310
AREA 47	47WW19	198.93	21.31	11/30/07	177.62	3310406.270	6959241.120
AREA 47	LHSMW54	193.71	16.30	12/1/07	177.41	3310541.190	6958535.210
AREA 67	67WW06	200.81	23.96	12/2/07	176.85	3311715.866	6956893.377

Appendix E

Basis of Estimate for LHAAP-46 Remediation

Alternative 2
MNA with LUC
Present Value

COMPANY NAME: **SHAW E & I**
PROJECT LOCATION: **KARNACK, TEXAS** **DATE:** **October 2009**

Year	FY	Capital Costs	O & M Costs				Present Value (NPV)		
			MNA	Monitoring		Total	Discount Rate	Capital	O & M
							2.8%		
1	2010	60,513	55,833			55,833	NPV	60,514	460,689
2	2011	0	55,833			55,833			
3	2012	0		31,185		31,185		Total NPV	$ 521,203
4	2013	0		26,811		26,811			
5	2014	0		69,336		69,336			
6	2015	0		16,674		16,674			
7	2016	0		16,674		16,674			
8	2017	0		16,674		16,674			
9	2018	0		16,674		16,674			
10	2019	0		59,199		59,199			
11	2020	0				0			
12	2021	0				0			
13	2022	0				0			
14	2023	0				0			
15	2024	0		59,199		59,199			
16	2025	0				0			
17	2026	0				0			
18	2027	0				0			
19	2028	0				0			
20	2029	0		59,199		59,199			
21	2030	0				0			
22	2031	0				0			
23	2032	0				0			
24	2033	0				0			
25	2034	0		59,199		59,199			
26	2035	0				0			
27	2036	0				0			
28	2037	0				0			
29	2038	0				0			
30	2039	0		59,199		59,199			
		60,513	111,666	490,018		601,684			

Alternative 2
MNA/LUC

COMPANY NAME: SHAW E & I
PROJECT LOCATION: KARNACK, TEXAS
DATE: October 2009

Item NO	DESCRIPTION	QTY	UNIT	LABOR UNIT MH	LABOR TOTAL MH	LABOR CRAFT	LABOR $/MH	LABOR $ VALUE	MATERIAL $/UNIT	MATERIAL $ VALUE	EQUIPMENT $/UNIT	EQUIPMENT $ VALUE	SUBCONTRACT $/UNIT	SUBCONTRACT $ VALUE	TOTAL ($)
	Year 1 - Capital Costs														
	Capital costs														
1	Allowance for Legal Fees, Administration Controls, and Documentation	1	lot										15,000	15,000	15,000
2	Establish initial database, licenses, work plans	1	ea	300	300	eng	81.60	24,480	5,000	5,000			5,000	5,000	34,480
	Capital Costs Subtotal							**24,480**		**5,000**		**0**		**20,000**	**49,480**
	Taxes @ 6.5 %									325					325
	Subtotal														**49,805**
	Indirects @ 21.5%														10,708
	Year 1 total Capitol costs														**$ 60,513**
	Years 1 and 2 MNA Monitoring (under O&M costs) - 9 wells														
1	Collect and prepare samples quarterly (GW)	36	ea	16	576	tech	34.30	19,760	110	3,960	36	1,296			25,016
2	Sample analysis (VOCs, MNA)	36	ea										425	15,300	15,300
3	Annual report	1	ea	64	64	eng	81.60	5,220	150	150					5,370
	Subtotal							**24,980**		**4,110**		**1,296**		**15,300**	**45,686**
	Taxes @ 6.5 %									267					267
	Subtotal														**45,953**
	Indirects @ 21.5%														9,880
	Annual O&M Cost														**$ 55,833**
	Years 1 and 2 Total Cost														**111,666**
	Year 3 Monitoring - 9 wells														
1	Collect and prepare samples semiannually	18	ea	16	288	tech	34.30	9,880	110	1,980	36	648			12,508
2	Sample analysis (VOCs, MNA)	18	ea										425	7,650	7,650
3	Annual report	1	ea	64	64	eng	81.60	5,220	150	150					5,370
	Subtotal							**15,100**		**2,130**		**648**		**7,650**	**25,528**
	Taxes @ 6.5 %									138					138
	Subtotal														**25,666**
	Indirects @ 21.5%														5,518
	Year 3 Total Cost														**$ 31,185**

Alternative 2
MNA/LUC

COMPANY NAME: SHAW E & I
PROJECT LOCATION: KARNACK, TEXAS
DATE: October 2009

Item NO	DESCRIPTION	QTY	UNIT	LABOR UNIT MH	LABOR TOTAL MH	LABOR CRAFT	LABOR $/MH	LABOR $ VALUE	MATERIAL $/UNIT	MATERIAL $ VALUE	EQUIPMENT $/UNIT	EQUIPMENT $ VALUE	SUBCONTRACT $/UNIT	SUBCONTRACT $ VALUE	TOTAL ($)
	Years 4 and 5 Monitoring - 9 wells														
1	Collect and prepare samples semiannually	18	ea	16	288	tech	34.30	9,880	110	1,980	36	648			12,508
2	Sample analysis (VOCs)	18	ea										225	4,050	4,050
3	Annual report	1	ea	64	64	eng	81.60	5,220	150	150					5,370
	Subtotal							**15,100**		**2,130**		**648**		**4,050**	**21,928**
	Taxes @ 6.5 %									138					138
	Subtotal														**22,066**
	Indirects @ 21.5%														4,744
	Annual O&M Cost														**$ 26,811**
	Years 4 and 5 Total Cost														**53,621**
	Five Year Report/Inspection														
1	Five Year report/inspections	1	ea										35,000	35,000	35,000
	Subtotal							**0**		**0**		**0**		**35,000**	**35,000**
	Taxes @ 6.5 %									0					0
	Subtotal														**35,000**
	Indirects @ 21.5%														7,525
	Total for 1 Event														**$ 42,525**
	Total for 6 Events - years 5, 10, 15, 20, 25, and 30														**255,150**
	Years 6 through 10 Monitoring - 9 wells														
1	Collect and prepare samples Annually	9	ea	16	144	tech	34.30	4,940	110	990	36	324			6,254
2	Sample analysis (VOCs)	9	ea										225	2,025	2,025
3	Annual report	1	ea	64	64	eng	81.60	5,220	150	150					5,370
	Subtotal							**10,160**		**1,140**		**324**		**2,025**	**13,649**
	Taxes @ 6.5 %									74					74
	Subtotal														**13,723**
	Indirects @ 21.5%														2,950
	Annual O&M Cost														**$ 16,674**
	Years 6 through 10 Total Cost														**83,368**

Alternative 2
MNA/LUC

COMPANY NAME: SHAW E & I
PROJECT LOCATION: KARNACK, TEXAS
DATE: October 2009

Item NO	DESCRIPTION	QTY	UNIT	LABOR UNIT MH	LABOR TOTAL MH	LABOR CRAFT	LABOR $/MH	LABOR $ VALUE	MATERIAL $/UNIT	MATERIAL $ VALUE	EQUIPMENT $/UNIT	EQUIPMENT $ VALUE	SUBCONTRACT $/UNIT	SUBCONTRACT $ VALUE	TOTAL ($)
	Years 15, 20, 25, and 30 Monitoring - 9 wells														
1	Collect and prepare samples once every 5 yrs	9	ea	16	144	tech	34.30	4,940	110	990	36	324		0	6,254
2	Sample analysis (VOCs)	9	ea										225	2,025	2,025
3	Annual report	1	ea	64	64	eng	81.60	5,220	150	150					5,370
	Subtotal							**10,160**		**1,140**		**324**		**2,025**	**13,649**
	Taxes @ 6.5 %									74					74
	Subtotal														**13,723**
	Indirects @ 21.5%														2,950
	One Event O&M Cost														**$ 16,674**
	Years 15, 20, 25, and 30 Total Cost														**66,694**

Alternative 3
In Situ Bioremediation with Short Term LUCs and LTM
Present Value

COMPANY NAME: **SHAW E&I**
PROJECT LOCATION: **KARNACK, TEXAS** **DATE:** **October 2009**

Year	FY	Capital Costs		O & M Costs			Present Value (NPV)		
		Bioremediation	Monitoring	Monitoring		Total	Discount Rate	Capital	O & M
1	2010	292,982	85,983	55,833		55,833	2.8%		
2	2011			55,833		55,833	**NPV**	**378,965**	**365,000**
3	2012			26,811		26,811			
4	2013			26,811		26,811		**Total NPV**	**$ 743,965**
5	2014			69,336		69,336			
6	2015			16,674		16,674			
7	2016			16,674		16,674			
8	2017			16,674		16,674			
9	2018			16,674		16,674			
10	2019			59,199		59,199			
11	2020					0			
12	2021					0			
13	2022					0			
14	2023					0			
15	2024			60,037		60,037			
			378,965	420,553		420,553			

Note:
Cost estimate for this alternative assumes completion within 15 years.

Alternative 3
In Situ Bioremediation with Short Term LUCs and LTM

COMPANY NAME: SHAW E & I
PROJECT LOCATION: KARNACK, TEXAS
DATE: October 2009

Item NO	DESCRIPTION	QTY	UNIT	LABOR UNIT MH	LABOR TOTAL MH	LABOR CRAFT	LABOR $/MH	LABOR $ VALUE	MATERIAL $/UNIT	MATERIAL $ VALUE	EQUIPMENT $/UNIT	EQUIPMENT $ VALUE	SUBCONTRACT $/UNIT	SUBCONTRACT $ VALUE	TOTAL ($)
	Field Work														
	2010														
1	Work plans, safety plans	1	ea	240	240	eng	81.60	19,584	200	200					19,784
2	UIC Permit and Design	1	ea	160	160	eng/geol	91.50	14,640	200	200					14,840
3	Treatability Study	1	ea	120	120	eng	81.60	9,792	200	200					9,992
4	Treatability Sample Collection	4	ea	50	200	eng/geol	91.50	18,300	50	200	50.00	200	500	2,000	20,700
5	Driller for Treatability Sampling	2	wells										4000	8,000	8,000
6	Per Diem and Travel Costs	4	days						50	200	80.00	320	99	396	916
7	Mob / Demob (incl clear and grub)	1	ea	40	40	eng	81.60	3,264	1,200	1,200	1,000	1,000	2000	2,000	7,464
8	Field H&S	1	hr	180	180	h/s	55.70	10,026	50	50	160	160			10,236
9	Field Super/Geolog	1	hr	180	180	geol	71.20	12,816	4	720	2,825	2,825			16,361
10	Field Tech/Operator	1	hr	180	180	super/tech	89.90	16,182	4	720					16,902
11	Field Tech	1	hr	180	180	tech	34.30	6,174	4	720					6,894
12	Vehicles	42	day						10	420	80	3,360			3,780
13	Per Diem	84	day										109	9,156	9,156
14	Driller Mob/Demob	1	ea										1200	1,200	1,200
15	Inject bio material, 40' dpt, 2" dia.	48	ea										800	38,400	38,400
16	Bioaugmentation materials (lactate)	6660	lb						0.95	6,327	0.50	3,330			9,657
17	Injection point survey	1	ea										3,000	3,000	3,000
18	Drill waste disposal	10	drum										250	2,500	2,500
19	Collect & prepare drill waste drum samples	10	ea	12	120	tech	34.30	4,116	60	600	36	360			5,076
20	Sample analysis Waste Characterization	10	ea										1,500	15,000	15,000
21	Collect and prepare samples (2 times)	18	ea	16	288	tech	34.30	9,878	122	2,196	36	648			12,722
22	Sample analysis (VOCs and MNA)	18	ea										425	7,650	7,650
	Subtotal							**124,772**		**13,953**		**12,203**		**89,302**	**240,230**
	Taxes @ 6.5 %									907					907
	Subtotal														**241,137**
	Indirects @ 21.5%														51,845
	Year 1 Total Capital Costs														**$ 292,982**

Alternative 3
In Situ Bioremediation with Short Term LUCs and LTM

COMPANY NAME: SHAW E & I
PROJECT LOCATION: KARNACK, TEXAS
DATE: October 2009

Item NO	DESCRIPTION	QTY	UNIT	LABOR UNIT MH	LABOR TOTAL MH	LABOR CRAFT	LABOR $/MH	LABOR $ VALUE	MATERIAL $/UNIT	MATERIAL $ VALUE	EQUIPMENT $/UNIT	EQUIPMENT $ VALUE	SUBCONTRACT $/UNIT	SUBCONTRACT $ VALUE	TOTAL ($)
	2010														
1	Allowance for Legal Fees, Administration Controls, and Documentation	1	lot										15,000	15,000	15,000
2	Establish initial database, licenses, coordinate well characterization & other well info, develop work plans, etc	1	ea	300	300	eng	81.60	24,480	5,000	5,000			5,000	5,000	34,480
3	Geoprobe install 2 additional monitoring wells	2	ea	40	80	geo	71.20	5,696	1,500	3,000	36	72	6000	12,000	20,768
	Subtotal							**30,176**		**8,000**		**72**		**32,000**	**70,248**
	Taxes @ 6.5 %									520					520
	Subtotal														**70,768**
	Indirects @ 21.5%														15,215
	Year 1 Total Capital Costs														**$ 85,983**
	Monitoring of 8 wells plus 1 Quality Control (9 total)														
	Years 1 and 2 - O&M														
1	Collect and prepare samples quarterly (GW)	36	ea	16	576	tech	34.30	19,760	110	3,960	36	1,296			25,016
2	Sample analysis (VOCs and MNA)	36	ea										425	15,300	15,300
3	Annual report	1	ea	64	64	eng	81.60	5,220	150	150					5,370
	Subtotal							**24,980**		**4,110**		**1,296**		**15,300**	**45,686**
	Taxes @ 6.5 %									267					267
	Subtotal														**45,953**
	Indirects @ 21.5%														9,880
	Annual O&M Costs														**$ 55,833**
	Years 1 and 2 Total O&M Costs														**111,666**

Alternative 3
In Situ Bioremediation with Short Term LUCs and LTM

COMPANY NAME: SHAW E & I
PROJECT LOCATION: KARNACK, TEXAS
DATE: October 2009

Item NO	DESCRIPTION	QTY	UNIT	LABOR UNIT MH	LABOR TOTAL MH	LABOR CRAFT	LABOR $/MH	LABOR $ VALUE	MATERIAL $/UNIT	MATERIAL $ VALUE	EQUIPMENT $/UNIT	EQUIPMENT $ VALUE	SUBCONTRACT $/UNIT	SUBCONTRACT $ VALUE	TOTAL ($)
	Years 3 and 4 - O&M														
1	Collect & prepare samples semiannually (GW)	18	ea	16	288	tech	34.30	9,880	110	1,980	36	648			12,508
2	Sample analysis (VOCs)	18	ea										225	4,050	4,050
3	Annual report	1	ea	64	64	eng	81.60	5,220	150	150					5,370
	Subtotal							**15,100**		**2,130**		**648**		**4,050**	**21,928**
	Taxes @ 6.5 %									138					138
	Subtotal														**22,066**
	Indirects @ 21.5%														4,744
	Annual O&M Costs														**$ 26,811**
	Years 3 and 4 Total O&M Costs														**53,621**
	Year 5 - O&M														
1	Collect & prepare samples semiannually (GW)	18	ea	16	288	tech	34.30	9,880	110	1,980	36	648			12,508
2	Sample analysis (VOCs)	18	ea										225	4,050	4,050
3	Annual report	1	ea	64	64	eng	81.60	5,220	150	150					5,370
4	Five year report/inspections	1	ea										35,000	35,000	35,000
	Subtotal							**15,100**		**2,130**		**648**		**39,050**	**56,928**
	Taxes @ 6.5 %									138					138
	Subtotal														**57,066**
	Indirects @ 21.5%														12,269
	Year 5 Total O&M Costs														**$ 69,336**
	Years 6 through 9 - O&M														
1	Collect & prepare samples Annually (GW)	9	ea	16	144	tech	34.30	4,940	110	990	36	324			6,254
2	Sample analysis (VOCs)	9	ea										225	2,025	2,025
3	Annual report	1	ea	64	64	eng	81.60	5,220	150	150					5,370
	Subtotal							**10,160**		**1,140**		**324**		**2,025**	**13,649**
	Taxes @ 6.5 %									74					74
	Subtotal														**13,723**
	Indirects @ 21.5%														2,950
	Annual O&M Costs														**$ 16,674**
	Years 6 through 9 Total O&M Costs														**66,694**

Alternative 3
In Situ Bioremediation with Short Term LUCs and LTM

COMPANY NAME: SHAW E & I
PROJECT LOCATION: KARNACK, TEXAS
DATE: October 2009

Item				LABOR					MATERIAL		EQUIPMENT		SUBCONTRACT		
NO	DESCRIPTION	QTY	UNIT	UNIT MH	TOTAL MH	CRAFT	$/MH	$ VALUE	$/UNIT	$ VALUE	$/UNIT	$ VALUE	$/UNIT	$ VALUE	TOTAL ($)
	Year 10 - O&M														
1	Collect & prepare samples Annually (GW)	9	ea	16	144	tech	34.30	4,940	110	990	36	324			6,254
2	Sample analysis (VOCs)	9	ea										225	2,025	2,025
3	Annual report	1	ea	64	64	eng	81.60	5,220	150	150					5,370
4	Five year report/inspections	1	ea										35,000	35,000	35,000
	Subtotal							**10,160**		**1,140**		**324**		**37,025**	**48,649**
	Taxes @ 6.5 %									74					74
	Subtotal														**48,723**
	Indirects @ 21.5%														10,475
	Year 10 Total O&M Costs														**$ 59,199**
	Year 15 - O&M														
1	Collect & prepare samples every 5 years (GW)	9	ea	16	144	tech	38.00	5,470	110	990	36	324			6,784
2	Sample analysis (VOCs)	9	ea										225	2,025	2,025
3	Event report	1	ea	64	64	eng	84.00	5,380	150	150					5,530
4	Five year report/inspections	1	ea										35,000	35,000	35,000
	Subtotal							**10,850**		**1,140**		**324**		**37,025**	**49,339**
	Taxes @ 6.5 %									74					74
	Subtotal														**49,413**
	Indirects @ 21.5%														10,624
	Year 15 Total O&M Costs														**$ 60,037**

2.1.1.1 Summary Data

LABORATORY REPORT

00078177

L08100867

11/24/08 14:34

Submitted By

Microbac Laboratories Inc.
158 Starlite Drive
Marietta , OH 45750
(740) 373 - 4071

For

Account Name: Shaw E & I, Inc.
ABB Lummus Biulding
3010 Briarpark Drive Suite 4N
Houston, TX 77042
Attention: Jennifer Hoang

Project Number: 2773.025
Project: Longhorn AAP
Site: LONGHORN AAP KARNACK TX
Invoice Number: 597891
P.O. Number: 389869/ 390836(GWTP)

Sample Analysis Summary

Client ID	Lab ID	Method	Dilution	Date Received
LHSMW25-102808	L08100867-01	8260B	1	30-OCT-08
LHSMW25-102808-MS	L08100867-02	8260B	1	30-OCT-08
LHSMW25-102808-MSD	L08100867-03	8260B	1	30-OCT-08
LHSMW25-102808-QA	L08100867-04	8260B	1	30-OCT-08
LHSMW23-102808	L08100867-05	8260B	1	30-OCT-08
46WW02-102808	L08100867-06	8260B	1	30-OCT-08
LHSMW20-102708	L08100867-08	8260B	1	30-OCT-08
LHSMW15-102708	L08100867-09	8260B	1	30-OCT-08
29WW16-102808	L08100867-11	8260B	100000	30-OCT-08
29WW16-102808	L08100867-11	8260B	50000	30-OCT-08

Report Number: **L08100867**
Report Date : **November 24, 2008**

00078178

Sample Number: **L08100867-01**
Client ID: **LHSMW25-102808**
Matrix: **Water**
Workgroup Number: **WG287207**
Collect Date: **10/28/2008 12:50**
Sample Tag: **01**

PrePrep Method: **NONE**
Prep Method: **5030B**
Analytical Method: **8260B**
Analyst: **CAA**
Dilution: **1**
Units: **ug/L**

Instrument: **HPMS6**
Prep Date: **11/07/2008 22:11**
Cal Date: **10/28/2008 21:12**
Run Date: **11/07/2008 22:11**
File ID: **6M79567**

Analyte	CAS. Number	Result	Qual	PQL	SDL
Acetone	67-64-1		U	10.0	2.50
Benzene	71-43-2		U	1.00	0.125
Bromobenzene	108-86-1		U	1.00	0.125
Bromochloromethane	74-97-5		U	1.00	0.200
Bromodichloromethane	75-27-4		U	1.00	0.250
Bromoform	75-25-2		U	1.00	0.500
Bromomethane	74-83-9		U	1.00	0.500
2-Butanone	78-93-3		U	10.0	2.50
n-Butylbenzene	104-51-8		U	1.00	0.250
sec-Butylbenzene	135-98-8		U	1.00	0.250
tert-Butylbenzene	98-06-6		U	1.00	0.250
Carbon disulfide	75-15-0		U	1.00	0.500
Carbon tetrachloride	56-23-5		U	1.00	0.250
Chlorobenzene	108-90-7		U	1.00	0.125
Chlorodibromomethane	124-48-1		U	1.00	0.250
Chloroethane	75-00-3		U	1.00	0.500
2-Chloroethyl vinyl ether	110-75-8		U	10.0	2.00
Chloroform	67-66-3		U	1.00	0.125
Chloromethane	74-87-3		U	1.00	0.250
2-Chlorotoluene	95-49-8		U	1.00	0.125
4-Chlorotoluene	106-43-4		U	1.00	0.250
1,2-Dibromo-3-chloropropane	96-12-8		U	5.00	1.00
1,2-Dibromoethane	106-93-4		U	1.00	0.250
Dibromomethane	74-95-3		U	1.00	0.250
1,2-Dichlorobenzene	95-50-1		U	1.00	0.125
1,3-Dichlorobenzene	541-73-1		U	1.00	0.250
1,4-Dichlorobenzene	106-46-7		U	1.00	0.125
Dichlorodifluoromethane	75-71-8		U	1.00	0.250
1,1-Dichloroethane	75-34-3		U	1.00	0.125
1,2-Dichloroethane	107-06-2		U	1.00	0.250
1,1-Dichloroethene	75-35-4		U	1.00	0.500
cis-1,2-Dichloroethene	156-59-2		U	1.00	0.250
trans-1,2-Dichloroethene	156-60-5		U	1.00	0.250
1,2-Dichloropropane	78-87-5		U	1.00	0.200
1,3-Dichloropropane	142-28-9		U	1.00	0.200
2,2-Dichloropropane	594-20-7		U	1.00	0.250
cis-1,3-Dichloropropene	10061-01-5		U	1.00	0.250
trans-1,3-Dichloropropene	10061-02-6		U	1.00	0.500
1,1-Dichloropropene	563-58-6		U	1.00	0.250
Ethylbenzene	100-41-4		U	1.00	0.250
2-Hexanone	591-78-6		U	10.0	2.50
Hexachlorobutadiene	87-68-3		U	1.00	0.250
Isopropylbenzene	98-82-8		U	1.00	0.250
p-Isopropyltoluene	99-87-6		U	1.00	0.250
4-Methyl-2-pentanone	108-10-1		U	10.0	2.50
Methylene chloride	75-09-2		U	5.00	0.250
Naphthalene	91-20-3		U	1.00	0.200
n-Propylbenzene	103-65-1		U	1.00	0.125
Styrene	100-42-5		U	1.00	0.125
1,1,1,2-Tetrachloroethane	630-20-6		U	1.00	0.250
1,1,2,2-Tetrachloroethane	79-34-5		U	1.00	0.125
Tetrachloroethene	127-18-4		U	1.00	0.250
Toluene	108-88-3		U	1.00	0.250
1,2,3-Trichlorobenzene	87-61-6		U	1.00	0.150
1,2,4-Trichlorobenzene	120-82-1		U	1.00	0.200
1,1,1-Trichloroethane	71-55-6		U	1.00	0.250
1,1,2-Trichloroethane	79-00-5		U	1.00	0.250
Trichloroethene	79-01-6		U	1.00	0.250
Trichlorofluoromethane	75-69-4		U	1.00	0.250

Microbac®

Sample Number: L08100867-01
Client ID: LHSMW25-102808
Matrix: Water
Workgroup Number: WG287207
Collect Date: 10/28/2008 12:50
Sample Tag: 01

PrePrep Method: NONE
Prep Method: 5030B
Analytical Method: 8260B
Analyst: CAA
Dilution: 1
Units: ug/L

Instrument: HPMS6
Prep Date: 11/07/2008 22:11
Cal Date: 10/28/2008 21:12
Run Date: 11/07/2008 22:11
File ID: 6M79567

Analyte	CAS. Number	Result	Qual	PQL	SDL
1,2,3-Trichloropropane	96-18-4		U	1.00	0.500
1,2,4-Trimethylbenzene	95-63-6		U	1.00	0.250
1,3,5-Trimethylbenzene	108-67-8		U	1.00	0.250
Vinyl acetate	108-05-4		U	10.0	2.50
Vinyl chloride	75-01-4		U	1.00	0.250
o-Xylene	95-47-6		U	1.00	0.250
m-,p-Xylene	136777-61-2		U	1.00	0.500

Surrogate	% Recovery	Lower	Upper	Qual
Dibromofluoromethane	111	86	118	
1,2-Dichloroethane-d4	112	80	120	
Toluene-d8	87.8	88	110	*
4-Bromofluorobenzene	91.9	86	115	

U Not detected at or above adjusted sample detection limit
* Surrogate or spike compound out of range

Sample Number: L08100867-02
Client ID: LHSMW25-102808-MS
Matrix: Water
Workgroup Number: WG287207
Collect Date: 10/28/2008 12:50
Sample Tag: 01

PrePrep Method: NONE
Prep Method: 5030B
Analytical Method: 8260B
Analyst: CAA
Dilution: 1
Units: ug/L

Instrument: HPMS6
Prep Date: 11/07/2008 22:43
Cal Date: 10/28/2008 21:12
Run Date: 11/07/2008 22:43
File ID: 6M79568

Analyte	CAS. Number	Result	Qual	PQL	SDL
Acetone	67-64-1	26.9		10.0	2.50
Benzene	71-43-2	20.9		1.00	0.125
Bromobenzene	108-86-1	20.4		1.00	0.125
Bromochloromethane	74-97-5	24.9		1.00	0.200
Bromodichloromethane	75-27-4	28.1		1.00	0.250
Bromoform	75-25-2	22.1		1.00	0.500
Bromomethane	74-83-9	17.1		1.00	0.500
2-Butanone	78-93-3	17.9		10.0	2.50
n-Butylbenzene	104-51-8	20.3		1.00	0.250
sec-Butylbenzene	135-98-8	20.0		1.00	0.250
tert-Butylbenzene	98-06-6	18.9		1.00	0.250
Carbon disulfide	75-15-0	8.00		1.00	0.500
Carbon tetrachloride	56-23-5	21.6		1.00	0.250
Chlorobenzene	108-90-7	21.1		1.00	0.125
Chlorodibromomethane	124-48-1	22.8		1.00	0.250
Chloroethane	75-00-3	23.8		1.00	0.500
2-Chloroethyl vinyl ether	110-75-8		U	10.0	2.00
Chloroform	67-66-3	25.3		1.00	0.125
Chloromethane	74-87-3	22.7		1.00	0.250
2-Chlorotoluene	95-49-8	20.5		1.00	0.125
4-Chlorotoluene	106-43-4	21.3		1.00	0.250
1,2-Dibromo-3-chloropropane	96-12-8	19.7		5.00	1.00
1,2-Dibromoethane	106-93-4	23.0		1.00	0.250
Dibromomethane	74-95-3	27.6		1.00	0.250
1,2-Dichlorobenzene	95-50-1	21.4		1.00	0.125
1,3-Dichlorobenzene	541-73-1	21.0		1.00	0.250
1,4-Dichlorobenzene	106-46-7	20.3		1.00	0.125
Dichlorodifluoromethane	75-71-8	28.7		1.00	0.250
1,1-Dichloroethane	75-34-3	22.9		1.00	0.125
1,2-Dichloroethane	107-06-2	26.5		1.00	0.250
1,1-Dichloroethene	75-35-4	22.6		1.00	0.500
cis-1,2-Dichloroethene	156-59-2	22.6		1.00	0.250
trans-1,2-Dichloroethene	156-60-5	20.5		1.00	0.250
1,2-Dichloropropane	78-87-5	21.4		1.00	0.200
1,3-Dichloropropane	142-28-9	22.2		1.00	0.200
2,2-Dichloropropane	594-20-7	17.7		1.00	0.250
cis-1,3-Dichloropropene	10061-01-5	22.1		1.00	0.250
trans-1,3-Dichloropropene	10061-02-6	19.5		1.00	0.500
1,1-Dichloropropene	563-58-6	19.1		1.00	0.250
Ethylbenzene	100-41-4	21.6		1.00	0.250
2-Hexanone	591-78-6	21.9		10.0	2.50
Hexachlorobutadiene	87-68-3	19.0		1.00	0.250
Isopropylbenzene	98-82-8	17.1		1.00	0.250
p-Isopropyltoluene	99-87-6	20.1		1.00	0.250
4-Methyl-2-pentanone	108-10-1	20.5		10.0	2.50
Methylene chloride	75-09-2	21.6		5.00	0.250
Naphthalene	91-20-3	17.1		1.00	0.200
n-Propylbenzene	103-65-1	17.6		1.00	0.125
Styrene	100-42-5	19.5		1.00	0.125
1,1,1,2-Tetrachloroethane	630-20-6	22.8		1.00	0.250
1,1,2,2-Tetrachloroethane	79-34-5	19.2		1.00	0.125
Tetrachloroethene	127-18-4	20.4		1.00	0.250
Toluene	108-88-3	20.5		1.00	0.250
1,2,3-Trichlorobenzene	87-61-6	15.7		1.00	0.150
1,2,4-Trichlorobenzene	120-82-1	17.9		1.00	0.200
1,1,1-Trichloroethane	71-55-6	22.4		1.00	0.250
1,1,2-Trichloroethane	79-00-5	22.7		1.00	0.250
Trichloroethene	79-01-6	22.3		1.00	0.250
Trichlorofluoromethane	75-69-4	24.4		1.00	0.250

Sample Number: L08100867-02
Client ID: LHSMW25-102808-MS
Matrix: Water
Workgroup Number: WG287207
Collect Date: 10/28/2008 12:50
Sample Tag: 01

PrePrep Method: NONE
Prep Method: 5030B
Analytical Method: 8260B
Analyst: CAA
Dilution: 1
Units: ug/L

Instrument: HPMS6
Prep Date: 11/07/2008 22:43
Cal Date: 10/28/2008 21:12
Run Date: 11/07/2008 22:43
File ID: 6M79568

Analyte	CAS. Number	Result	Qual	PQL	SDL
1,2,3-Trichloropropane	96-18-4	19.4		1.00	0.500
1,2,4-Trimethylbenzene	95-63-6	21.7		1.00	0.250
1,3,5-Trimethylbenzene	108-67-8	18.0		1.00	0.250
Vinyl acetate	108-05-4	15.3		10.0	2.50
Vinyl chloride	75-01-4	40.5		1.00	0.250
o-Xylene	95-47-6	22.3		1.00	0.250
m-,p-Xylene	136777-61-2	46.1		1.00	0.500

Surrogate	% Recovery	Lower	Upper	Qual
Dibromofluoromethane	107	86	118	
1,2-Dichloroethane-d4	111	80	120	
Toluene-d8	88.7	88	110	
4-Bromofluorobenzene	87.1	86	115	

U Not detected at or above adjusted sample detection limit

Sample Number: L08100867-03
Client ID: LHSMW25-102808-MSD
Matrix: Water
Workgroup Number: WG287207
Collect Date: 10/28/2008 12:50
Sample Tag: 01

PrePrep Method: NONE
Prep Method: 5030B
Analytical Method: 8260B
Analyst: CAA
Dilution: 1
Units: ug/L

Instrument: HPMS6
Prep Date: 11/07/2008 23:16
Cal Date: 10/28/2008 21:12
Run Date: 11/07/2008 23:16
File ID: 6M79569

Analyte	CAS. Number	Result	Qual	PQL	SDL
Acetone	67-64-1	29.4		10.0	2.50
Benzene	71-43-2	20.9		1.00	0.125
Bromobenzene	108-86-1	20.7		1.00	0.125
Bromochloromethane	74-97-5	24.7		1.00	0.200
Bromodichloromethane	75-27-4	28.1		1.00	0.250
Bromoform	75-25-2	22.2		1.00	0.500
Bromomethane	74-83-9	18.9		1.00	0.500
2-Butanone	78-93-3	20.4		10.0	2.50
n-Butylbenzene	104-51-8	20.9		1.00	0.250
sec-Butylbenzene	135-98-8	20.3		1.00	0.250
tert-Butylbenzene	98-06-6	19.6		1.00	0.250
Carbon disulfide	75-15-0	7.74		1.00	0.500
Carbon tetrachloride	56-23-5	19.2		1.00	0.250
Chlorobenzene	108-90-7	21.5		1.00	0.125
Chlorodibromomethane	124-48-1	23.0		1.00	0.250
Chloroethane	75-00-3	25.5		1.00	0.500
2-Chloroethyl vinyl ether	110-75-8		U	10.0	2.00
Chloroform	67-66-3	24.8		1.00	0.125
Chloromethane	74-87-3	23.4		1.00	0.250
2-Chlorotoluene	95-49-8	20.4		1.00	0.125
4-Chlorotoluene	106-43-4	21.7		1.00	0.250
1,2-Dibromo-3-chloropropane	96-12-8	20.5		5.00	1.00
1,2-Dibromoethane	106-93-4	22.8		1.00	0.250
Dibromomethane	74-95-3	28.4		1.00	0.250
1,2-Dichlorobenzene	95-50-1	22.1		1.00	0.125
1,3-Dichlorobenzene	541-73-1	21.5		1.00	0.250
1,4-Dichlorobenzene	106-46-7	20.5		1.00	0.125
Dichlorodifluoromethane	75-71-8	28.3		1.00	0.250
1,1-Dichloroethane	75-34-3	21.7		1.00	0.125
1,2-Dichloroethane	107-06-2	25.5		1.00	0.250
1,1-Dichloroethene	75-35-4	21.3		1.00	0.500
cis-1,2-Dichloroethene	156-59-2	22.3		1.00	0.250
trans-1,2-Dichloroethene	156-60-5	19.1		1.00	0.250
1,2-Dichloropropane	78-87-5	21.4		1.00	0.200
1,3-Dichloropropane	142-28-9	22.5		1.00	0.200
2,2-Dichloropropane	594-20-7	16.6		1.00	0.250
cis-1,3-Dichloropropene	10061-01-5	22.2		1.00	0.250
trans-1,3-Dichloropropene	10061-02-6	19.4		1.00	0.500
1,1-Dichloropropene	563-58-6	18.3		1.00	0.250
Ethylbenzene	100-41-4	21.1		1.00	0.250
2-Hexanone	591-78-6	23.5		10.0	2.50
Hexachlorobutadiene	87-68-3	19.1		1.00	0.250
Isopropylbenzene	98-82-8	17.3		1.00	0.250
p-Isopropyltoluene	99-87-6	20.5		1.00	0.250
4-Methyl-2-pentanone	108-10-1	22.5		10.0	2.50
Methylene chloride	75-09-2	22.3		5.00	0.250
Naphthalene	91-20-3	18.4		1.00	0.200
n-Propylbenzene	103-65-1	18.2		1.00	0.125
Styrene	100-42-5	19.3		1.00	0.125
1,1,1,2-Tetrachloroethane	630-20-6	22.4		1.00	0.250
1,1,2,2-Tetrachloroethane	79-34-5	19.9		1.00	0.125
Tetrachloroethene	127-18-4	20.1		1.00	0.250
Toluene	108-88-3	20.4		1.00	0.250
1,2,3-Trichlorobenzene	87-61-6	17.2		1.00	0.150
1,2,4-Trichlorobenzene	120-82-1	18.7		1.00	0.200
1,1,1-Trichloroethane	71-55-6	21.0		1.00	0.250
1,1,2-Trichloroethane	79-00-5	22.6		1.00	0.250
Trichloroethene	79-01-6	22.0		1.00	0.250
Trichlorofluoromethane	75-69-4	22.0		1.00	0.250

Sample Number: L08100867-03
Client ID: LHSMW25-102808-MSD
Matrix: Water
Workgroup Number: WG287207
Collect Date: 10/28/2008 12:50
Sample Tag: 01

PrePrep Method: NONE
Prep Method: 5030B
Analytical Method: 8260B
Analyst: CAA
Dilution: 1
Units: ug/L

Instrument: HPMS6
Prep Date: 11/07/2008 23:16
Cal Date: 10/28/2008 21:12
Run Date: 11/07/2008 23:16
File ID: 6M79569

Analyte	CAS. Number	Result	Qual	PQL	SDL
1,2,3-Trichloropropane	96-18-4	21.5		1.00	0.500
1,2,4-Trimethylbenzene	95-63-6	21.9		1.00	0.250
1,3,5-Trimethylbenzene	108-67-8	18.5		1.00	0.250
Vinyl acetate	108-05-4	13.5		10.0	2.50
Vinyl chloride	75-01-4	36.6		1.00	0.250
o-Xylene	95-47-6	22.0		1.00	0.250
m-,p-Xylene	136777-61-2	45.4		1.00	0.500

Surrogate	% Recovery	Lower	Upper	Qual
Dibromofluoromethane	104	86	118	
1,2-Dichloroethane-d4	103	80	120	
Toluene-d8	89.7	88	110	
4-Bromofluorobenzene	90.9	86	115	

U Not detected at or above adjusted sample detection limit

Sample Number: L08100867-04
Client ID: LHSMW25-102808-QA
Matrix: Water
Workgroup Number: WG287207
Collect Date: 10/28/2008 12:50
Sample Tag: 01

PrePrep Method: NONE
Prep Method: 5030B
Analytical Method: 8260B
Analyst: CAA
Dilution: 1
Units: ug/L

Instrument: HPMS6
Prep Date: 11/07/2008 21:39
Cal Date: 10/28/2008 21:12
Run Date: 11/07/2008 21:39
File ID: 6M79566

Analyte	CAS. Number	Result	Qual	PQL	SDL
Acetone	67-64-1		U	10.0	2.50
Benzene	71-43-2		U	1.00	0.125
Bromobenzene	108-86-1		U	1.00	0.125
Bromochloromethane	74-97-5		U	1.00	0.200
Bromodichloromethane	75-27-4		U	1.00	0.250
Bromoform	75-25-2		U	1.00	0.500
Bromomethane	74-83-9		U	1.00	0.500
2-Butanone	78-93-3		U	10.0	2.50
n-Butylbenzene	104-51-8		U	1.00	0.250
sec-Butylbenzene	135-98-8		U	1.00	0.250
tert-Butylbenzene	98-06-6		U	1.00	0.250
Carbon disulfide	75-15-0		U	1.00	0.500
Carbon tetrachloride	56-23-5		U	1.00	0.250
Chlorobenzene	108-90-7		U	1.00	0.125
Chlorodibromomethane	124-48-1		U	1.00	0.250
Chloroethane	75-00-3		U	1.00	0.500
2-Chloroethyl vinyl ether	110-75-8		U	10.0	2.00
Chloroform	67-66-3		U	1.00	0.125
Chloromethane	74-87-3		U	1.00	0.250
2-Chlorotoluene	95-49-8		U	1.00	0.125
4-Chlorotoluene	106-43-4		U	1.00	0.250
1,2-Dibromo-3-chloropropane	96-12-8		U	5.00	1.00
1,2-Dibromoethane	106-93-4		U	1.00	0.250
Dibromomethane	74-95-3		U	1.00	0.250
1,2-Dichlorobenzene	95-50-1		U	1.00	0.125
1,3-Dichlorobenzene	541-73-1		U	1.00	0.250
1,4-Dichlorobenzene	106-46-7		U	1.00	0.125
Dichlorodifluoromethane	75-71-8		U	1.00	0.250
1,1-Dichloroethane	75-34-3		U	1.00	0.125
1,2-Dichloroethane	107-06-2		U	1.00	0.250
1,1-Dichloroethene	75-35-4		U	1.00	0.500
cis-1,2-Dichloroethene	156-59-2		U	1.00	0.250
trans-1,2-Dichloroethene	156-60-5		U	1.00	0.250
1,2-Dichloropropane	78-87-5		U	1.00	0.200
1,3-Dichloropropane	142-28-9		U	1.00	0.200
2,2-Dichloropropane	594-20-7		U	1.00	0.250
cis-1,3-Dichloropropene	10061-01-5		U	1.00	0.250
trans-1,3-Dichloropropene	10061-02-6		U	1.00	0.500
1,1-Dichloropropene	563-58-6		U	1.00	0.250
Ethylbenzene	100-41-4		U	1.00	0.250
2-Hexanone	591-78-6		U	10.0	2.50
Hexachlorobutadiene	87-68-3		U	1.00	0.250
Isopropylbenzene	98-82-8		U	1.00	0.250
p-Isopropyltoluene	99-87-6		U	1.00	0.250
4-Methyl-2-pentanone	108-10-1		U	10.0	2.50
Methylene chloride	75-09-2		U	5.00	0.250
Naphthalene	91-20-3		U	1.00	0.200
n-Propylbenzene	103-65-1		U	1.00	0.125
Styrene	100-42-5		U	1.00	0.125
1,1,1,2-Tetrachloroethane	630-20-6		U	1.00	0.250
1,1,2,2-Tetrachloroethane	79-34-5		U	1.00	0.125
Tetrachloroethene	127-18-4		U	1.00	0.250
Toluene	108-88-3		U	1.00	0.250
1,2,3-Trichlorobenzene	87-61-6		U	1.00	0.150
1,2,4-Trichlorobenzene	120-82-1		U	1.00	0.200
1,1,1-Trichloroethane	71-55-6		U	1.00	0.250
1,1,2-Trichloroethane	79-00-5		U	1.00	0.250
Trichloroethene	79-01-6		U	1.00	0.250
Trichlorofluoromethane	75-69-4		U	1.00	0.250

Sample Number: L08100867-04
Client ID: LHSMW25-102808-QA
Matrix: Water
Workgroup Number: WG287207
Collect Date: 10/28/2008 12:50
Sample Tag: 01

PrePrep Method: NONE
Prep Method: 5030B
Analytical Method: 8260B
Analyst: CAA
Dilution: 1
Units: ug/L

Instrument: HPMS6
Prep Date: 11/07/2008 21:39
Cal Date: 10/28/2008 21:12
Run Date: 11/07/2008 21:39
File ID: 6M79566

Analyte	CAS. Number	Result	Qual	PQL	SDL
1,2,3-Trichloropropane	96-18-4		U	1.00	0.500
1,2,4-Trimethylbenzene	95-63-6		U	1.00	0.250
1,3,5-Trimethylbenzene	108-67-8		U	1.00	0.250
Vinyl acetate	108-05-4		U	10.0	2.50
Vinyl chloride	75-01-4		U	1.00	0.250
o-Xylene	95-47-6		U	1.00	0.250
m-,p-Xylene	136777-61-2		U	1.00	0.500

Surrogate	% Recovery	Lower	Upper	Qual
Dibromofluoromethane	109	86	118	
1,2-Dichloroethane-d4	111	80	120	
Toluene-d8	87.4	88	110	*
4-Bromofluorobenzene	92.1	86	115	

U Not detected at or above adjusted sample detection limit
* Surrogate or spike compound out of range

Sample Number: L08100867-05
Client ID: LHSMW23-102808
Matrix: Water
Workgroup Number: WG287207
Collect Date: 10/28/2008 11:40
Sample Tag: 01

PrePrep Method: NONE
Prep Method: 5030B
Analytical Method: 8260B
Analyst: CAA
Dilution: 1
Units: ug/L

Instrument: HPMS6
Prep Date: 11/07/2008 14:43
Cal Date: 10/28/2008 21:12
Run Date: 11/07/2008 14:43
File ID: 6M79553

Analyte	CAS. Number	Result	Qual	PQL	SDL
Acetone	67-64-1		U	10.0	2.50
Benzene	71-43-2		U	1.00	0.125
Bromobenzene	108-86-1		U	1.00	0.125
Bromochloromethane	74-97-5		U	1.00	0.200
Bromodichloromethane	75-27-4		U	1.00	0.250
Bromoform	75-25-2		U	1.00	0.500
Bromomethane	74-83-9		U	1.00	0.500
2-Butanone	78-93-3		U	10.0	2.50
n-Butylbenzene	104-51-8		U	1.00	0.250
sec-Butylbenzene	135-98-8		U	1.00	0.250
tert-Butylbenzene	98-06-6		U	1.00	0.250
Carbon disulfide	75-15-0		U	1.00	0.500
Carbon tetrachloride	56-23-5		U	1.00	0.250
Chlorobenzene	108-90-7		U	1.00	0.125
Chlorodibromomethane	124-48-1		U	1.00	0.250
Chloroethane	75-00-3		U	1.00	0.500
2-Chloroethyl vinyl ether	110-75-8		U	10.0	2.00
Chloroform	67-66-3		U	1.00	0.125
Chloromethane	74-87-3		U	1.00	0.250
2-Chlorotoluene	95-49-8		U	1.00	0.125
4-Chlorotoluene	106-43-4		U	1.00	0.250
1,2-Dibromo-3-chloropropane	96-12-8		U	5.00	1.00
1,2-Dibromoethane	106-93-4		U	1.00	0.250
Dibromomethane	74-95-3		U	1.00	0.250
1,2-Dichlorobenzene	95-50-1		U	1.00	0.125
1,3-Dichlorobenzene	541-73-1		U	1.00	0.250
1,4-Dichlorobenzene	106-46-7		U	1.00	0.125
Dichlorodifluoromethane	75-71-8		U	1.00	0.250
1,1-Dichloroethane	75-34-3		U	1.00	0.125
1,2-Dichloroethane	107-06-2		U	1.00	0.250
1,1-Dichloroethene	75-35-4	0.789	J	1.00	0.500
cis-1,2-Dichloroethene	156-59-2	0.614	J	1.00	0.250
trans-1,2-Dichloroethene	156-60-5	1.02		1.00	0.250
1,2-Dichloropropane	78-87-5		U	1.00	0.200
1,3-Dichloropropane	142-28-9		U	1.00	0.200
2,2-Dichloropropane	594-20-7		U	1.00	0.250
cis-1,3-Dichloropropene	10061-01-5		U	1.00	0.250
trans-1,3-Dichloropropene	10061-02-6		U	1.00	0.500
1,1-Dichloropropene	563-58-6		U	1.00	0.250
Ethylbenzene	100-41-4		U	1.00	0.250
2-Hexanone	591-78-6		U	10.0	2.50
Hexachlorobutadiene	87-68-3		U	1.00	0.250
Isopropylbenzene	98-82-8		U	1.00	0.250
p-Isopropyltoluene	99-87-6		U	1.00	0.250
4-Methyl-2-pentanone	108-10-1		U	10.0	2.50
Methylene chloride	75-09-2		U	5.00	0.250
Naphthalene	91-20-3		U	1.00	0.200
n-Propylbenzene	103-65-1		U	1.00	0.125
Styrene	100-42-5		U	1.00	0.125
1,1,1,2-Tetrachloroethane	630-20-6		U	1.00	0.250
1,1,2,2-Tetrachloroethane	79-34-5		U	1.00	0.125
Tetrachloroethene	127-18-4		U	1.00	0.250
Toluene	108-88-3		U	1.00	0.250
1,2,3-Trichlorobenzene	87-61-6		U	1.00	0.150
1,2,4-Trichlorobenzene	120-82-1		U	1.00	0.200
1,1,1-Trichloroethane	71-55-6		U	1.00	0.250
1,1,2-Trichloroethane	79-00-5		U	1.00	0.250
Trichloroethene	79-01-6	2.51		1.00	0.250
Trichlorofluoromethane	75-69-4		U	1.00	0.250

Sample Number: L08100867-05
Client ID: LHSMW23-102808
Matrix: Water
Workgroup Number: WG287207
Collect Date: 10/28/2008 11:40
Sample Tag: 01

PrePrep Method: NONE
Prep Method: 5030B
Analytical Method: 8260B
Analyst: CAA
Dilution: 1
Units: ug/L

Instrument: HPMS6
Prep Date: 11/07/2008 14:43
Cal Date: 10/28/2008 21:12
Run Date: 11/07/2008 14:43
File ID: 6M79553

Analyte	CAS. Number	Result	Qual	PQL	SDL
1,2,3-Trichloropropane	96-18-4		U	1.00	0.500
1,2,4-Trimethylbenzene	95-63-6		U	1.00	0.250
1,3,5-Trimethylbenzene	108-67-8		U	1.00	0.250
Vinyl acetate	108-05-4		U	10.0	2.50
Vinyl chloride	75-01-4	0.412	J	1.00	0.250
o-Xylene	95-47-6		U	1.00	0.250
m-,p-Xylene	136777-61-2		U	1.00	0.500

Surrogate	% Recovery	Lower	Upper	Qual
Dibromofluoromethane	94.1	86	118	
1,2-Dichloroethane-d4	88.9	80	120	
Toluene-d8	84.8	88	110	*
4-Bromofluorobenzene	92.8	86	115	

U Not detected at or above adjusted sample detection limit
J The analyte was positively identified, but the quantitation was below the RL
* Surrogate or spike compound out of range

Sample Number: L08100867-06
Client ID: 46WW02-102808
Matrix: Water
Workgroup Number: WG287207
Collect Date: 10/28/2008 13:55
Sample Tag: 01

PrePrep Method: NONE
Prep Method: 5030B
Analytical Method: 8260B
Analyst: CAA
Dilution: 1
Units: ug/L

Instrument: HPMS6
Prep Date: 11/07/2008 15:15
Cal Date: 10/28/2008 21:12
Run Date: 11/07/2008 15:15
File ID: 6M79554

Analyte	CAS. Number	Result	Qual	PQL	SDL
Acetone	67-64-1		U	10.0	2.50
Benzene	71-43-2		U	1.00	0.125
Bromobenzene	108-86-1		U	1.00	0.125
Bromochloromethane	74-97-5		U	1.00	0.200
Bromodichloromethane	75-27-4		U	1.00	0.250
Bromoform	75-25-2		U	1.00	0.500
Bromomethane	74-83-9		U	1.00	0.500
2-Butanone	78-93-3		U	10.0	2.50
n-Butylbenzene	104-51-8		U	1.00	0.250
sec-Butylbenzene	135-98-8		U	1.00	0.250
tert-Butylbenzene	98-06-6		U	1.00	0.250
Carbon disulfide	75-15-0		U	1.00	0.500
Carbon tetrachloride	56-23-5		U	1.00	0.250
Chlorobenzene	108-90-7		U	1.00	0.125
Chlorodibromomethane	124-48-1		U	1.00	0.250
Chloroethane	75-00-3		U	1.00	0.500
2-Chloroethyl vinyl ether	110-75-8		U	10.0	2.00
Chloroform	67-66-3		U	1.00	0.125
Chloromethane	74-87-3		U	1.00	0.250
2-Chlorotoluene	95-49-8		U	1.00	0.125
4-Chlorotoluene	106-43-4		U	1.00	0.250
1,2-Dibromo-3-chloropropane	96-12-8		U	5.00	1.00
1,2-Dibromoethane	106-93-4		U	1.00	0.250
Dibromomethane	74-95-3		U	1.00	0.250
1,2-Dichlorobenzene	95-50-1		U	1.00	0.125
1,3-Dichlorobenzene	541-73-1		U	1.00	0.250
1,4-Dichlorobenzene	106-46-7		U	1.00	0.125
Dichlorodifluoromethane	75-71-8		U	1.00	0.250
1,1-Dichloroethane	75-34-3		U	1.00	0.125
1,2-Dichloroethane	107-06-2		U	1.00	0.250
1,1-Dichloroethene	75-35-4	1.47		1.00	0.500
cis-1,2-Dichloroethene	156-59-2	1.45		1.00	0.250
trans-1,2-Dichloroethene	156-60-5		U	1.00	0.250
1,2-Dichloropropane	78-87-5		U	1.00	0.200
1,3-Dichloropropane	142-28-9		U	1.00	0.200
2,2-Dichloropropane	594-20-7		U	1.00	0.250
cis-1,3-Dichloropropene	10061-01-5		U	1.00	0.250
trans-1,3-Dichloropropene	10061-02-6		U	1.00	0.500
1,1-Dichloropropene	563-58-6		U	1.00	0.250
Ethylbenzene	100-41-4		U	1.00	0.250
2-Hexanone	591-78-6		U	10.0	2.50
Hexachlorobutadiene	87-68-3		U	1.00	0.250
Isopropylbenzene	98-82-8		U	1.00	0.250
p-Isopropyltoluene	99-87-6		U	1.00	0.250
4-Methyl-2-pentanone	108-10-1		U	10.0	2.50
Methylene chloride	75-09-2		U	5.00	0.250
Naphthalene	91-20-3		U	1.00	0.200
n-Propylbenzene	103-65-1		U	1.00	0.125
Styrene	100-42-5		U	1.00	0.125
1,1,1,2-Tetrachloroethane	630-20-6		U	1.00	0.250
1,1,2,2-Tetrachloroethane	79-34-5		U	1.00	0.125
Tetrachloroethene	127-18-4		U	1.00	0.250
Toluene	108-88-3		U	1.00	0.250
1,2,3-Trichlorobenzene	87-61-6		U	1.00	0.150
1,2,4-Trichlorobenzene	120-82-1		U	1.00	0.200
1,1,1-Trichloroethane	71-55-6		U	1.00	0.250
1,1,2-Trichloroethane	79-00-5		U	1.00	0.250
Trichloroethene	79-01-6	31.2		1.00	0.250
Trichlorofluoromethane	75-69-4		U	1.00	0.250

Sample Number: L08100867-06
Client ID: 46WW02-102808
Matrix: Water
Workgroup Number: WG287207
Collect Date: 10/28/2008 13:55
Sample Tag: 01

PrePrep Method: NONE
Prep Method: 5030B
Analytical Method: 8260B
Analyst: CAA
Dilution: 1
Units: ug/L

Instrument: HPMS6
Prep Date: 11/07/2008 15:15
Cal Date: 10/28/2008 21:12
Run Date: 11/07/2008 15:15
File ID: 6M79554

Analyte	CAS. Number	Result	Qual	PQL	SDL
1,2,3-Trichloropropane	96-18-4		U	1.00	0.500
1,2,4-Trimethylbenzene	95-63-6		U	1.00	0.250
1,3,5-Trimethylbenzene	108-67-8		U	1.00	0.250
Vinyl acetate	108-05-4		U	10.0	2.50
Vinyl chloride	75-01-4		U	1.00	0.250
o-Xylene	95-47-6		U	1.00	0.250
m-,p-Xylene	136777-61-2		U	1.00	0.500

Surrogate	% Recovery	Lower	Upper	Qual
Dibromofluoromethane	96.5	86	118	
1,2-Dichloroethane-d4	89.4	80	120	
Toluene-d8	86.3	88	110	*
4-Bromofluorobenzene	92.3	86	115	

U Not detected at or above adjusted sample detection limit
* Surrogate or spike compound out of range

Sample Number: L08100867-08
Client ID: LHSMW20-102708
Matrix: Water
Workgroup Number: WG286975
Collect Date: 10/27/2008 15:20
Sample Tag: 01

PrePrep Method: NONE
Prep Method: 5030B
Analytical Method: 8260B
Analyst: WTD
Dilution: 1
Units: ug/L

Instrument: HPMS11
Prep Date: 11/05/2008 16:37
Cal Date: 11/03/2008 20:21
Run Date: 11/05/2008 16:37
File ID: 11M54993

Analyte	CAS. Number	Result	Qual	PQL	SDL
Acetone	67-64-1		U	10.0	2.50
Benzene	71-43-2		U	1.00	0.125
Bromobenzene	108-86-1		U	1.00	0.125
Bromochloromethane	74-97-5		U	1.00	0.200
Bromodichloromethane	75-27-4		U	1.00	0.250
Bromoform	75-25-2		U	1.00	0.500
Bromomethane	74-83-9		U	1.00	0.500
2-Butanone	78-93-3		U	10.0	2.50
n-Butylbenzene	104-51-8		U	1.00	0.250
sec-Butylbenzene	135-98-8		U	1.00	0.250
tert-Butylbenzene	98-06-6		U	1.00	0.250
Carbon disulfide	75-15-0		U	1.00	0.500
Carbon tetrachloride	56-23-5		U	1.00	0.250
Chlorobenzene	108-90-7		U	1.00	0.125
Chlorodibromomethane	124-48-1		U	1.00	0.250
Chloroethane	75-00-3		U	1.00	0.500
2-Chloroethyl vinyl ether	110-75-8		U	10.0	2.00
Chloroform	67-66-3		U	1.00	0.125
Chloromethane	74-87-3		U	1.00	0.250
2-Chlorotoluene	95-49-8		U	1.00	0.125
4-Chlorotoluene	106-43-4		U	1.00	0.250
1,2-Dibromo-3-chloropropane	96-12-8		U	5.00	1.00
1,2-Dibromoethane	106-93-4		U	1.00	0.250
Dibromomethane	74-95-3		U	1.00	0.250
1,2-Dichlorobenzene	95-50-1		U	1.00	0.125
1,3-Dichlorobenzene	541-73-1		U	1.00	0.250
1,4-Dichlorobenzene	106-46-7		U	1.00	0.125
Dichlorodifluoromethane	75-71-8		U	1.00	0.250
1,1-Dichloroethane	75-34-3		U	1.00	0.125
1,2-Dichloroethane	107-06-2		U	1.00	0.250
1,1-Dichloroethene	75-35-4		U	1.00	0.500
cis-1,2-Dichloroethene	156-59-2		U	1.00	0.250
trans-1,2-Dichloroethene	156-60-5		U	1.00	0.250
1,2-Dichloropropane	78-87-5		U	1.00	0.200
1,3-Dichloropropane	142-28-9		U	1.00	0.200
2,2-Dichloropropane	594-20-7		U	1.00	0.250
cis-1,3-Dichloropropene	10061-01-5		U	1.00	0.250
trans-1,3-Dichloropropene	10061-02-6		U	1.00	0.500
1,1-Dichloropropene	563-58-6		U	1.00	0.250
Ethylbenzene	100-41-4		U	1.00	0.250
2-Hexanone	591-78-6		U	10.0	2.50
Hexachlorobutadiene	87-68-3		U	1.00	0.250
Isopropylbenzene	98-82-8		U	1.00	0.250
p-Isopropyltoluene	99-87-6		U	1.00	0.250
4-Methyl-2-pentanone	108-10-1		U	10.0	2.50
Methylene chloride	75-09-2		U	5.00	0.250
Naphthalene	91-20-3		U	1.00	0.200
n-Propylbenzene	103-65-1		U	1.00	0.125
Styrene	100-42-5		U	1.00	0.125
1,1,1,2-Tetrachloroethane	630-20-6		U	1.00	0.250
1,1,2,2-Tetrachloroethane	79-34-5		U	1.00	0.125
Tetrachloroethene	127-18-4		U	1.00	0.250
Toluene	108-88-3		U	1.00	0.250
1,2,3-Trichlorobenzene	87-61-6		U	1.00	0.150
1,2,4-Trichlorobenzene	120-82-1		U	1.00	0.200
1,1,1-Trichloroethane	71-55-6		U	1.00	0.250
1,1,2-Trichloroethane	79-00-5		U	1.00	0.250
Trichloroethene	79-01-6		U	1.00	0.250
Trichlorofluoromethane	75-69-4		U	1.00	0.250

Sample Number: L08100867-08
Client ID: LHSMW20-102708
Matrix: Water
Workgroup Number: WG286975
Collect Date: 10/27/2008 15:20
Sample Tag: 01

PrePrep Method: NONE
Prep Method: 5030B
Analytical Method: 8260B
Analyst: WTD
Dilution: 1
Units: ug/L

Instrument: HPMS11
Prep Date: 11/05/2008 16:37
Cal Date: 11/03/2008 20:21
Run Date: 11/05/2008 16:37
File ID: 11M54993

Analyte	CAS. Number	Result	Qual	PQL	SDL
1,2,3-Trichloropropane	96-18-4		U	1.00	0.500
1,2,4-Trimethylbenzene	95-63-6		U	1.00	0.250
1,3,5-Trimethylbenzene	108-67-8		U	1.00	0.250
Vinyl acetate	108-05-4		U	10.0	2.50
Vinyl chloride	75-01-4		U	1.00	0.250
o-Xylene	95-47-6		U	1.00	0.250
m-,p-Xylene	136777-61-2		U	1.00	0.500

Surrogate	% Recovery	Lower	Upper	Qual
Dibromofluoromethane	90.6	86	118	
1,2-Dichloroethane-d4	83.4	80	120	
Toluene-d8	87.7	88	110	*
4-Bromofluorobenzene	93.0	86	115	

U Not detected at or above adjusted sample detection limit
* Surrogate or spike compound out of range

Sample Number: L08100867-09
Client ID: LHSMW15-102708
Matrix: Water
Workgroup Number: WG286975
Collect Date: 10/27/2008 13:50
Sample Tag: 01

PrePrep Method: NONE
Prep Method: 5030B
Analytical Method: 8260B
Analyst: WTD
Dilution: 1
Units: ug/L

Instrument: HPMS11
Prep Date: 11/05/2008 17:09
Cal Date: 11/03/2008 20:21
Run Date: 11/05/2008 17:09
File ID: 11M54994

Analyte	CAS. Number	Result	Qual	PQL	SDL
Acetone	67-64-1		U	10.0	2.50
Benzene	71-43-2		U	1.00	0.125
Bromobenzene	108-86-1		U	1.00	0.125
Bromochloromethane	74-97-5		U	1.00	0.200
Bromodichloromethane	75-27-4		U	1.00	0.250
Bromoform	75-25-2		U	1.00	0.500
Bromomethane	74-83-9		U	1.00	0.500
2-Butanone	78-93-3		U	10.0	2.50
n-Butylbenzene	104-51-8		U	1.00	0.250
sec-Butylbenzene	135-98-8		U	1.00	0.250
tert-Butylbenzene	98-06-6		U	1.00	0.250
Carbon disulfide	75-15-0		U	1.00	0.500
Carbon tetrachloride	56-23-5		U	1.00	0.250
Chlorobenzene	108-90-7		U	1.00	0.125
Chlorodibromomethane	124-48-1		U	1.00	0.250
Chloroethane	75-00-3		U	1.00	0.500
2-Chloroethyl vinyl ether	110-75-8		U	10.0	2.00
Chloroform	67-66-3		U	1.00	0.125
Chloromethane	74-87-3		U	1.00	0.250
2-Chlorotoluene	95-49-8		U	1.00	0.125
4-Chlorotoluene	106-43-4		U	1.00	0.250
1,2-Dibromo-3-chloropropane	96-12-8		U	5.00	1.00
1,2-Dibromoethane	106-93-4		U	1.00	0.250
Dibromomethane	74-95-3		U	1.00	0.250
1,2-Dichlorobenzene	95-50-1		U	1.00	0.125
1,3-Dichlorobenzene	541-73-1		U	1.00	0.250
1,4-Dichlorobenzene	106-46-7		U	1.00	0.125
Dichlorodifluoromethane	75-71-8		U	1.00	0.250
1,1-Dichloroethane	75-34-3		U	1.00	0.125
1,2-Dichloroethane	107-06-2		U	1.00	0.250
1,1-Dichloroethene	75-35-4		U	1.00	0.500
cis-1,2-Dichloroethene	156-59-2		U	1.00	0.250
trans-1,2-Dichloroethene	156-60-5		U	1.00	0.250
1,2-Dichloropropane	78-87-5		U	1.00	0.200
1,3-Dichloropropane	142-28-9		U	1.00	0.200
2,2-Dichloropropane	594-20-7		U	1.00	0.250
cis-1,3-Dichloropropene	10061-01-5		U	1.00	0.250
trans-1,3-Dichloropropene	10061-02-6		U	1.00	0.500
1,1-Dichloropropene	563-58-6		U	1.00	0.250
Ethylbenzene	100-41-4		U	1.00	0.250
2-Hexanone	591-78-6		U	10.0	2.50
Hexachlorobutadiene	87-68-3		U	1.00	0.250
Isopropylbenzene	98-82-8		U	1.00	0.250
p-Isopropyltoluene	99-87-6		U	1.00	0.250
4-Methyl-2-pentanone	108-10-1		U	10.0	2.50
Methylene chloride	75-09-2		U	5.00	0.250
Naphthalene	91-20-3		U	1.00	0.200
n-Propylbenzene	103-65-1		U	1.00	0.125
Styrene	100-42-5		U	1.00	0.125
1,1,1,2-Tetrachloroethane	630-20-6		U	1.00	0.250
1,1,2,2-Tetrachloroethane	79-34-5		U	1.00	0.125
Tetrachloroethene	127-18-4		U	1.00	0.250
Toluene	108-88-3		U	1.00	0.250
1,2,3-Trichlorobenzene	87-61-6		U	1.00	0.150
1,2,4-Trichlorobenzene	120-82-1		U	1.00	0.200
1,1,1-Trichloroethane	71-55-6		U	1.00	0.250
1,1,2-Trichloroethane	79-00-5		U	1.00	0.250
Trichloroethene	79-01-6		U	1.00	0.250
Trichlorofluoromethane	75-69-4		U	1.00	0.250

Sample Number: L08100867-09
Client ID: LHSMW15-102708
Matrix: Water
Workgroup Number: WG286975
Collect Date: 10/27/2008 13:50
Sample Tag: 01

PrePrep Method: NONE
Prep Method: 5030B
Analytical Method: 8260B
Analyst: WTD
Dilution: 1
Units: ug/L

Instrument: HPMS11
Prep Date: 11/05/2008 17:09
Cal Date: 11/03/2008 20:21
Run Date: 11/05/2008 17:09
File ID: 11M54994

Analyte	CAS. Number	Result	Qual	PQL	SDL
1,2,3-Trichloropropane	96-18-4		U	1.00	0.500
1,2,4-Trimethylbenzene	95-63-6		U	1.00	0.250
1,3,5-Trimethylbenzene	108-67-8		U	1.00	0.250
Vinyl acetate	108-05-4		U	10.0	2.50
Vinyl chloride	75-01-4		U	1.00	0.250
o-Xylene	95-47-6		U	1.00	0.250
m-,p-Xylene	136777-61-2		U	1.00	0.500

Surrogate	% Recovery	Lower	Upper	Qual
Dibromofluoromethane	90.4	86	118	
1,2-Dichloroethane-d4	84.2	80	120	
Toluene-d8	86.3	88	110	*
4-Bromofluorobenzene	92.7	86	115	

U Not detected at or above adjusted sample detection limit
* Surrogate or spike compound out of range

Sample Number: L08100867-11
Client ID: 29WW16-102808
Matrix: Water
Workgroup Number: WG287499
Collect Date: 10/28/2008 14:35
Sample Tag: DL02

PrePrep Method: NONE
Prep Method: 5030B
Analytical Method: 8260B
Analyst: WTD
Dilution: 100000
Units: ug/L

Instrument: HPMS14
Prep Date: 11/11/2008 19:12
Cal Date: 10/11/2008 03:19
Run Date: 11/11/2008 19:12
File ID: 14M09773

Analyte	CAS. Number	Result	Qual	PQL	SDL
Acetone	67-64-1		U	1000000	250000
Benzene	71-43-2		U	100000	12500
Bromobenzene	108-86-1		U	100000	12500
Bromochloromethane	74-97-5	43400	J	100000	20000
Bromodichloromethane	75-27-4		U	100000	25000
Bromoform	75-25-2		U	100000	50000
Bromomethane	74-83-9		U	100000	50000
2-Butanone	78-93-3		U	1000000	250000
n-Butylbenzene	104-51-8		U	100000	25000
sec-Butylbenzene	135-98-8		U	100000	25000
tert-Butylbenzene	98-06-6		U	100000	25000
Carbon disulfide	75-15-0		U	100000	50000
Carbon tetrachloride	56-23-5		U	100000	25000
Chlorobenzene	108-90-7		U	100000	12500
Chlorodibromomethane	124-48-1		U	100000	25000
Chloroethane	75-00-3		U	100000	50000
2-Chloroethyl vinyl ether	110-75-8		U	1000000	200000
Chloroform	67-66-3		U	100000	12500
Chloromethane	74-87-3		U	100000	25000
2-Chlorotoluene	95-49-8		U	100000	12500
4-Chlorotoluene	106-43-4		U	100000	25000
1,2-Dibromo-3-chloropropane	96-12-8		U	500000	100000
1,2-Dibromoethane	106-93-4		U	100000	25000
Dibromomethane	74-95-3		U	100000	25000
1,2-Dichlorobenzene	95-50-1		U	100000	12500
1,3-Dichlorobenzene	541-73-1		U	100000	25000
1,4-Dichlorobenzene	106-46-7		U	100000	12500
Dichlorodifluoromethane	75-71-8		U	100000	25000
1,1-Dichloroethane	75-34-3		U	100000	12500
1,2-Dichloroethane	107-06-2		U	100000	25000
1,1-Dichloroethene	75-35-4		U	100000	50000
cis-1,2-Dichloroethene	156-59-2		U	100000	25000
trans-1,2-Dichloroethene	156-60-5		U	100000	25000
1,2-Dichloropropane	78-87-5		U	100000	20000
1,3-Dichloropropane	142-28-9		U	100000	20000
2,2-Dichloropropane	594-20-7		U	100000	25000
cis-1,3-Dichloropropene	10061-01-5		U	100000	25000
trans-1,3-Dichloropropene	10061-02-6		U	100000	50000
1,1-Dichloropropene	563-58-6		U	100000	25000
Ethylbenzene	100-41-4		U	100000	25000
2-Hexanone	591-78-6		U	1000000	250000
Hexachlorobutadiene	87-68-3		U	100000	25000
Isopropylbenzene	98-82-8		U	100000	25000
p-Isopropyltoluene	99-87-6		U	100000	25000
4-Methyl-2-pentanone	108-10-1		U	1000000	250000
Methylene chloride	75-09-2	10300000		500000	25000
Naphthalene	91-20-3		U	100000	20000
n-Propylbenzene	103-65-1		U	100000	12500
Styrene	100-42-5		U	100000	12500
1,1,1,2-Tetrachloroethane	630-20-6		U	100000	25000
1,1,2,2-Tetrachloroethane	79-34-5		U	100000	12500
Tetrachloroethene	127-18-4		U	100000	25000
Toluene	108-88-3		U	100000	25000
1,2,3-Trichlorobenzene	87-61-6		U	100000	15000
1,2,4-Trichlorobenzene	120-82-1		U	100000	20000
1,1,1-Trichloroethane	71-55-6		U	100000	25000
1,1,2-Trichloroethane	79-00-5		U	100000	25000
Trichloroethene	79-01-6		U	100000	25000
Trichlorofluoromethane	75-69-4		U	100000	25000

Sample Number: L08100867-11
Client ID: 29WW16-102808
Matrix: Water
Workgroup Number: WG287499
Collect Date: 10/28/2008 14:35
Sample Tag: DL02

PrePrep Method: NONE
Prep Method: 5030B
Analytical Method: 8260B
Analyst: WTD
Dilution: 100000
Units: ug/L

Instrument: HPMS14
Prep Date: 11/11/2008 19:12
Cal Date: 10/11/2008 03:19
Run Date: 11/11/2008 19:12
File ID: 14M09773

Analyte	CAS. Number	Result	Qual	PQL	SDL
1,2,3-Trichloropropane	96-18-4		U	100000	50000
1,2,4-Trimethylbenzene	95-63-6		U	100000	25000
1,3,5-Trimethylbenzene	108-67-8		U	100000	25000
Vinyl acetate	108-05-4		U	1000000	250000
Vinyl chloride	75-01-4		U	100000	25000
o-Xylene	95-47-6		U	100000	25000
m-,p-Xylene	136777-61-2		U	100000	50000

Surrogate	% Recovery	Lower	Upper	Qual
Dibromofluoromethane	97.6	86	118	
1,2-Dichloroethane-d4	119	80	120	
Toluene-d8	103	88	110	
4-Bromofluorobenzene	108	86	115	

U Not detected at or above adjusted sample detection limit
J The analyte was positively identified, but the quantitation was below the RL

Sample Number: L08100867-11
Client ID: 29WW16-102808
Matrix: Water
Workgroup Number: WG287340
Collect Date: 10/28/2008 14:35
Sample Tag: DL01

PrePrep Method: NONE
Prep Method: 5030B
Analytical Method: 8260B
Analyst: MDA
Dilution: 50000
Units: ug/L

Instrument: HPMS14
Prep Date: 11/09/2008 02:16
Cal Date: 10/11/2008 03:19
Run Date: 11/09/2008 02:16
File ID: 14M09718

Analyte	CAS. Number	Result	Qual	PQL	SDL
Acetone	67-64-1		U	500000	125000
Benzene	71-43-2		U	50000	6250
Bromobenzene	108-86-1		U	50000	6250
Bromochloromethane	74-97-5	38200	J	50000	10000
Bromodichloromethane	75-27-4		U	50000	12500
Bromoform	75-25-2		U	50000	25000
Bromomethane	74-83-9		U	50000	25000
2-Butanone	78-93-3		U	500000	125000
n-Butylbenzene	104-51-8		U	50000	12500
sec-Butylbenzene	135-98-8		U	50000	12500
tert-Butylbenzene	98-06-6		U	50000	12500
Carbon disulfide	75-15-0		U	50000	25000
Carbon tetrachloride	56-23-5		U	50000	12500
Chlorobenzene	108-90-7		U	50000	6250
Chlorodibromomethane	124-48-1		U	50000	12500
Chloroethane	75-00-3		U	50000	25000
2-Chloroethyl vinyl ether	110-75-8		U	500000	100000
Chloroform	67-66-3		U	50000	6250
Chloromethane	74-87-3		U	50000	12500
2-Chlorotoluene	95-49-8		U	50000	6250
4-Chlorotoluene	106-43-4		U	50000	12500
1,2-Dibromo-3-chloropropane	96-12-8		U	250000	50000
1,2-Dibromoethane	106-93-4		U	50000	12500
Dibromomethane	74-95-3		U	50000	12500
1,2-Dichlorobenzene	95-50-1		U	50000	6250
1,3-Dichlorobenzene	541-73-1		U	50000	12500
1,4-Dichlorobenzene	106-46-7		U	50000	6250
Dichlorodifluoromethane	75-71-8		U	50000	12500
1,1-Dichloroethane	75-34-3		U	50000	6250
1,2-Dichloroethane	107-06-2		U	50000	12500
1,1-Dichloroethene	75-35-4		U	50000	25000
cis-1,2-Dichloroethene	156-59-2		U	50000	12500
trans-1,2-Dichloroethene	156-60-5		U	50000	12500
1,2-Dichloropropane	78-87-5		U	50000	10000
1,3-Dichloropropane	142-28-9		U	50000	10000
2,2-Dichloropropane	594-20-7		U	50000	12500
cis-1,3-Dichloropropene	10061-01-5		U	50000	12500
trans-1,3-Dichloropropene	10061-02-6		U	50000	25000
1,1-Dichloropropene	563-58-6		U	50000	12500
Ethylbenzene	100-41-4		U	50000	12500
2-Hexanone	591-78-6		U	500000	125000
Hexachlorobutadiene	87-68-3		U	50000	12500
Isopropylbenzene	98-82-8		U	50000	12500
p-Isopropyltoluene	99-87-6		U	50000	12500
4-Methyl-2-pentanone	108-10-1		U	500000	125000
Methylene chloride	75-09-2	12300000	I	250000	12500
Naphthalene	91-20-3		U	50000	10000
n-Propylbenzene	103-65-1		U	50000	6250
Styrene	100-42-5		U	50000	6250
1,1,1,2-Tetrachloroethane	630-20-6		U	50000	12500
1,1,2,2-Tetrachloroethane	79-34-5		U	50000	6250
Tetrachloroethene	127-18-4		U	50000	12500
Toluene	108-88-3		U	50000	12500
1,2,3-Trichlorobenzene	87-61-6		U	50000	7500
1,2,4-Trichlorobenzene	120-82-1		U	50000	10000
1,1,1-Trichloroethane	71-55-6		U	50000	12500
1,1,2-Trichloroethane	79-00-5		U	50000	12500
Trichloroethene	79-01-6		U	50000	12500
Trichlorofluoromethane	75-69-4		U	50000	12500

Sample Number: L08100867-11
Client ID: 29WW16-102808
Matrix: Water
Workgroup Number: WG287340
Collect Date: 10/28/2008 14:35
Sample Tag: DL01

PrePrep Method: NONE
Prep Method: 5030B
Analytical Method: 8260B
Analyst: MDA
Dilution: 50000
Units: ug/L

Instrument: HPMS14
Prep Date: 11/09/2008 02:16
Cal Date: 10/11/2008 03:19
Run Date: 11/09/2008 02:16
File ID: 14M09718

Analyte	CAS. Number	Result	Qual	PQL	SDL
1,2,3-Trichloropropane	96-18-4		U	50000	25000
1,2,4-Trimethylbenzene	95-63-6		U	50000	12500
1,3,5-Trimethylbenzene	108-67-8		U	50000	12500
Vinyl acetate	108-05-4		U	500000	125000
Vinyl chloride	75-01-4		U	50000	12500
o-Xylene	95-47-6		U	50000	12500
m-,p-Xylene	136777-61-2		U	50000	25000

Surrogate	% Recovery	Lower	Upper	Qual
Dibromofluoromethane	106	86	118	
1,2-Dichloroethane-d4	125	80	120	*
Toluene-d8	101	88	110	
4-Bromofluorobenzene	107	86	115	

U Not detected at or above adjusted sample detection limit
J The analyte was positively identified, but the quantitation was below the RL
* Surrogate or spike compound out of range
I Semiquantitative result (out of instrument calibration range)

2.1.1.2 QC Summary Data

Example 8260 Calculations

1.0 Calculating the Response Factor (RF) from the initial calibration (ICAL) data:

RF = [(Ax) (Cis)] / [(Ais) (Cx)]

where:	Example
Ax = Area of the characteristic ion for the compound being measured:	3399156
Cis = Concentration of the specific internal standard (ug/mL)	25
Ais = Area of the characteristic ion of the specific internal standard	846471
Cx = Concentration of the compound in the standard being measured (ug/mL)	100
RF = Calculated Response Factor	**1.0039**

2.0 Calculating the concentration (C) of a compound in water using the average RF: *

Cx = [(Ax) (Cis) (Vn)(D)] / [(Ais) (RF) (Vs)]

where:	**Example**
Ax = Area of the characteristic ion for the compound being measured	**3122498**
Cis = Concentration of the specific internal standard (ug/L)	**25**
D = Dilution factor for sample as a multiplier (10x = 10)	**1**
Ais = Area of the characteristic ion of the specific internal standard	**611048**
RF = Average RF from the ICAL	**1.004**
Vs = Purge volume of sample (mL)	**10**
Vn = Nominal purge volume of sample (mL) (10.0 mL)	**10**
Cx = Concentration of the compound in the sample being measured (ug/L)	**127.2428**

3.0 Calculating the concentration (C) of a compound in soil using the average RF: *

Cx = [(Ax) (Cis) (Wn)(D)] / [(Ais) (RF) (Ws)]

where:	**Example**
Ax = Area of the characteristic ion for the compound being measured	**3122498**
Cis = Concentration of the specific internal standard (ug/L)	**25**
D = Dilution factor for sample as a multiplier (10x = 10)	**1**
Ais = Area of the characteristic ion of the specific internal standard	**611048**
RF = Average RF from the ICAL	**1.004**
Ws = Weight of sample purged (g)	**5**
Wn = Nominal purge weight (g) (5.0 g)	**5**
Cx = Concentration of the compound in the sample being measured (ug/L)	**127.2428**

Dry weight correction:

Percent solids (PCT_S)	**50**
Cd = (Cx) (100)/PCT_S	**254.4856**

* Concentrations appearing on the instrument quantitation reports are on-column results and do not take into account initial volume, final volume, and the dilution factor.

4.0 Concentration from Linear Regression

Step 1: Retrieve Curve Data From Plot, y = mx + b

y = response ratio = response of analyte / response of IS = Ax/Ais

x = amount ratio = concentration analyte/concentration internal standard = Cx / Cis

m = slope from curve = 0.213

b = intercept from curve = - 0.00642

Step 2: Calculate y from Quantitation Report

y = 86550/593147 = 0.1459

Step 3: Solve for x

x = (y - b)/m = [(0.1459 -(- 0.00642)]/ 0.213 = 0.7152

Step 4: Solve for analyte concentration Cx

Cx = Cis (x) = (25.0)(0.7152) = 17.88

Example Spreadsheet Calculation:

Slope from curve, m:	**0.213**
Intercept from curve, b:	**-0.00642**
Area of analyte, Ax:	**86550**
Area of Internal Standard , Ais:	**593147**
Concentration of IS, Cis	**25.00**
Response Ratio:	**0.145917**
Amount Ratio:	**0.715195**
Concentration:	**17.87988**
Units of Internal Standard:	**ug/L**

5.0 Concentration from Quadratic Regression

Step 1 - Retrieve Curve Data from Plot, y = Ax^2 + Bx + C
Where:
Ax^2 + Bx + (C - y) = 0
A, B, C = constants from the ICAL quadratic regression
y = Response ratio = Area of analyte/Area of internal standard (IS)
x = Amount ratio = Concentration of analyte/concentration of IS

Step 2: Calculate y from Quantitation Report

y = Ax/Ais

Step 3: Solve for x using the quadratic formula
Ax^2 + Bx + C - y = 0

$$x = \frac{b \pm \sqrt{\left(b^2 - 4a(c - y)\right)}}{2a}$$ (Two possible solutions)

Step 4: Solve for analyte concentration Cx

Cx = (Cis)(Amount ratio)

Example Spreadsheet Calculation:

Value of A from plot:	**-0.00629**	
Value of B from plot:	**0.511**	
Value of C from plot:	**-0.0276**	
Area of unknown from quantitation report:	**293821**	
Area of IS from quantiation report:	**784848**	
Response ratio, y:	**0.374367**	
C - y:	**-0.40197**	
Root 1 - Computed amount ratio , X1:	**80.44567**	
Root 2 - Computed amount ratio , X2:	**0.794396**	use this solution
Concentration of IS, Cis:	**25.00**	
Concentration of analyte, Cx:	**19.86**	ug/L

Microbac Laboratories Inc.

Instrument Run Log

Instrument: HPMS14 Dataset: 101008
Analyst1: MDA Analyst2: NA
Method: 8260B SOP: MSV01 Rev: 12
Method: 5030B/5035 SOP: PAT01 Rev: 11

Maintenance Log ID:

Internal Standard: STD29209 Surrogate Standard: STD29108
CCV: STD29205 LCS: STD29154 MS/MSD: NA

Column 1 ID: RTX502.2 Column 2 ID: NA
Workgroups: WG284610

Comments:

Seq.	File ID	Sample Information	pH	Mat	Dil	Reference	Date/Time
1	14M08677	WG284468-01 50ng BFB	NA	1	1	STD29166	10/10/08 09:29
2	14M08678	WG284468-02 50ug/L STD 8260	NA	1	1		10/10/08 10:04
3	14M08682	WG284467-01 50ng BFB	NA	1	1	STD29166	10/10/08 12:35
4	14M08683	WG284467-02 50ug/L STD 8260	NA	1	1	STD29145	10/10/08 12:59
5	14M08684	WG284468-03 100ug/L App-IX STD	NA	1	1	STD29124	10/10/08 13:30
6	14M08685	WG284469-01 vblk1010 BLANK 8260	NA	1	1		10/10/08 14:02
7	14M08686	WG284469-01 VBLK1010 BLANK 8260	NA	1	1		10/10/08 14:31
8	14M08687	WG284610-01 50ng BFB	NA	1	1	STD29166	10/10/08 16:05
9	14M08688	WG284610-02 0.3ug/L STD 8260	NA	1	1	STD29205	10/10/08 16:28
10	14M08689	WG284610-03 0.4ug/L STD 8260	NA	1	1	STD29205	10/10/08 17:00
11	14M08690	WG284610-04 1ug/L STD 8260	NA	1	1	STD29205	10/10/08 17:31
12	14M08691	WG284610-05 2ug/L STD 8260	NA	1	1	STD29205	10/10/08 18:02
13	14M08692	WG284610-06 5ug/L STD 8260	NA	1	1	STD29205	10/10/08 18:33
14	14M08693	WG284610-07 20ug/L STD 8260	NA	1	1	STD29205	10/10/08 19:04
15	14M08694	WG284610-08 50ug/L STD 8260	NA	1	1	STD29205	10/10/08 19:35
16	14M08695	WG284610-09 100ug/L STD 8260	NA	1	1	STD29205	10/10/08 20:06
17	14M08696	WG284610-10 200ug/L STD 8260	NA	1	1	STD29205	10/10/08 20:37
18	14M08697	WG284610-11 300ug/L STD 8260	NA	1	1	STD29205	10/10/08 21:08
19	14M08698	RINSE	NA	1	1		10/10/08 21:39
20	14M08699	RINSE	NA	1	1		10/10/08 22:09
21	14M08700	RINSE	NA	1	1		10/10/08 22:40
22	14M08701	WG284610-12 20ug/L ICV 8260	NA	1	1	STD29154	10/10/08 23:11
23	14M08702	WG284610-13 100ug/L APP-IX STD	NA	1	1	STD29154	10/10/08 23:45
24	14M08703	WG284610-13 vblk1010 blank 8260	NA	1	1		10/11/08 00:31
25	14M08704	rinse	NA	1	1		10/11/08 01:08
26	14M08705	rinse	NA	1	1		10/11/08 01:54
27	14M08706	rinse	NA	1	1		10/11/08 02:36
28	14M08707	WG284610-02 0.3ug/L STD 8260	NA	1	1	STD29205	10/11/08 03:19
29	14M08708	WG284610-12 20UG/l ICV 8260	NA		1	STD29154	10/11/08 03:50

Comments

Seq.	Rerun	Dil.	Reason	Analytes
9				

Approved:

Microbac®

Page: 1

Microbac Laboratories Inc.

Instrument Run Log

Instrument: HPMS14 Dataset: 101008
Analyst1: MDA Analyst2: NA
Method: 8260B SOP: MSV01 Rev: 12
Method: 5030B/5035 SOP: PAT01 Rev: 11

Maintenance Log ID:

Internal Standard: STD29209 Surrogate Standard: STD29108
CCV: STD29205 LCS: STD29154 MS/MSD: NA

Column 1 ID: RTX502.2 Column 2 ID: NA
Workgroups: WG284610

Comments:

Comments

Seq.	Rerun	Dil.	Reason	Analytes
File ID: 14M08688				
	DNR RR			
22				
File ID: 14M08701				
	DNR RR			

Approved:

Microbac®

Microbac Laboratories Inc.

Instrument Run Log

Instrument: HPMS6 Dataset: 102808
Analyst1: CAA Analyst2: NA
Method: 8260B SOP: MSV01 Rev: 12
Method: 5030/5035 SOP: PAT01 Rev: 11

Maintenance Log ID: 26431

Internal Standard: STD29482 Surrogate Standard: STD29540
CCV: STD29541 LCS: STD29544 MS/MSD: NA

Column 1 ID: RTX502.2 Column 2 ID: NA
Workgroups: WG286204

Comments: ICAL: VC, bromomethane 1-100; TBA 10-400.
Alt SCR: DCDF high.

Seq.	File ID	Sample Information	pH	Mat	Dil	Reference	Date/Time
1	6M79235	WG286204-01 50ng BFB STD 8260	NA	1	1	STD29166	10/28/08 08:47
2	6M79236	WG286204-01 50ng BFB STD 8260	NA	1	1	STD29166	10/28/08 09:04
3	6M79237	WG286204-02 50ug/L STD 8260	NA	1	1	STD29457	10/28/08 09:32
4	6M79238	WG286204-02 50ug/L STD 8260	NA	1	1	STD29457	10/28/08 10:10
5	6M79239	SYSTEM BLANK	NA	1	1		10/28/08 10:54
6	6M79240	SYSTEM BLANK	NA	1	1		10/28/08 14:10
7	6M79241	WG286204-01 50ng BFB STD 8260	NA	1	1	STD29166	10/28/08 15:16
8	6M79242	HEPTANE CHECK	NA	1	1	STD29538	10/28/08 15:43
9	6M79243	WG286204-02 0.3ug/L STD 8260	NA	1	1	STD29541	10/28/08 16:16
10	6M79244	WG286204-03 0.4ug/L STD 8260	NA	1	1	STD29541	10/28/08 16:49
11	6M79245	WG286204-04 1ug/L STD 8260	NA	1	1	STD29541	10/28/08 17:21
12	6M79246	WG286204-05 2ug/L STD 8260	NA	1	1	STD29541	10/28/08 17:55
13	6M79247	WG286204-06 5ug/L STD 8260	NA	1	1	STD29541	10/28/08 18:28
14	6M79248	WG286204-07 20ug/L STD 8260	NA	1	1	STD29541	10/28/08 19:00
15	6M79249	WG286204-08 50ug/L STD 8260	NA	1	1	STD29541	10/28/08 19:33
16	6M79250	WG286204-09 100ug/L STD 8260	NA	1	1	STD29541	10/28/08 20:07
17	6M79251	WG286204-10 200ug/L STD 8260	NA	1	1	STD29541	10/28/08 20:40
18	6M79252	WG286204-11 300ug/L STD 8260	NA	1	1	STD29541	10/28/08 21:12
19	6M79253	SYSTEM BLANK	NA	1	1		10/28/08 21:45
20	6M79254	SYSTEM BLANK	NA	1	1		10/28/08 22:18
21	6M79255	WG286204-12 20ug/L Alt Source STD 8260	NA	1	1		10/28/08 22:51
22	6M79256	SYSTEM BLANK	NA	1	1		10/28/08 23:23
23	6M79257	SYSTEM BLANK	NA	1	1		10/28/08 23:56

Approved: November 02, 2008

Page: 1

Microbac Laboratories Inc.

Instrument Run Log

Instrument: HPMS11 Dataset: 110308
Analyst1: WTD Analyst2: NA
Method: 8260B SOP: MSV01 Rev: 12
Method: 624 SOP: MSV10 Rev: 11
Method: 5030/5035 SOP: PAT01 Rev: 12
Maintenance Log ID: 26471

Internal Standard: STD29280 Surrogate Standard: STD29393
CCV: STD29572 LCS: STD29544 MS/MSD: NA

Column 1 ID: RTX502.2 Column 2 ID: NA
Workgroups: 286813

Comments:

Seq.	File ID	Sample Information	pH	Mat	Dil	Reference	Date/Time
1	11M54910	WG286813-01 50ng BFB	NA	1	1	STD29166	11/03/08 14:59
2	11M54911	WG286813-02 0.3 STD	NA	1	1	STD29572	11/03/08 15:26
3	11M54912	WG286813-03 0.4 STD	NA	1	1	STD29572	11/03/08 16:07
4	11M54913	WG286813-04 1.0 STD	NA	1	1	STD29572	11/03/08 16:39
5	11M54914	WG286813-05 2.0 STD	NA	1	1	STD29572	11/03/08 17:11
6	11M54915	WG286813-06 5.0 STD	NA	1	1	STD29572	11/03/08 17:42
7	11M54916	WG286813-07 20.0 STD	NA	1	1	STD29572	11/03/08 18:14
8	11M54917	WG286813-08 50.0 STD	NA	1	1	STD29572	11/03/08 18:46
9	11M54918	WG286813-09 100.0 STD	NA	1	1	STD29572	11/03/08 19:18
10	11M54919	WG286813-10 200.0 STD	NA	1	1	STD29572	11/03/08 19:50
11	11M54920	WG286813-11 300.0 STD	NA	1	1	STD29572	11/03/08 20:21
12	11M54921	SYSTEM BLANK	NA	1	1		11/03/08 20:53
13	11M54922	SYSTEM BLANK	NA	1	1		11/03/08 21:25
14	11M54923	WG286813-12 ALT SOURCE	NA	1	1	STD29544	11/03/08 21:57
15	11M54924	SYSTEM BLANK	NA	1	1		11/03/08 22:29

Approved:

Microbac®

Microbac Laboratories Inc.

Instrument Run Log

Instrument: HPMS11 Dataset: 110508
Analyst1: WTD Analyst2: NA
Method: 8260B SOP: MSV01 Rev: 12
Method: 624 SOP: MSV10 Rev: 11
Method: 5030/5035 SOP: PAT01 Rev: 12
Maintenance Log ID: 26539

Internal Standard: STD29280 Surrogate Standard: STD29393
CCV: STD29572 LCS: STD29700 MS/MSD: NA

Column 1 ID: RTX502.2 Column 2 ID: NA
Workgroups: 286975,287054

Comments:

Seq.	File ID	Sample Information	pH	Mat	Dil	Reference	Date/Time
1	11M54979	WG286973-01 50ng BFB	NA	1	1	STD29166	11/05/08 09:14
2	11M54980	WG286973-02 50ug/L STD 8260	NA	1	1	STD29572	11/05/08 09:41
3	11M54981	WG286975-01 BLANK 8260	NA	1	1		11/05/08 10:13
4	11M54982	WG286975-01 BLANK 8260	NA	1	1		11/05/08 10:45
5	11M54983	WG286975-02 LCS 20ug/L 8260	NA	1	1	STD29544	11/05/08 11:17
6	11M54984	WG286975-03 LCSD 20ug/L 8260	NA	1	1	STD29544	11/05/08 11:49
7	11M54985	SYSTEM BLANK	NA	1	1		11/05/08 12:21
8	11M54986	L08100796-16 A 826-LOW	<2	1	1		11/05/08 12:52
9	11M54987	L08100745-06 A 826-SPE	<2	1	1		11/05/08 13:24
10	11M54988	L08100700-05 B 10X 826-SPE	<2	1	10		11/05/08 13:56
11	11M54989	L08100734-01 B 2X 826-SPE	<2	1	2		11/05/08 14:29
12	11M54990	L08100734-03 B 2X 826-SPE	<2	1	2		11/05/08 15:01
13	11M54991	L08100796-15 A 826-LOW	<2	1	1		11/05/08 15:33
14	11M54992	L08100796-17 A 50X 826-LOW	<2	1	50		11/05/08 16:05
15	11M54993	L08100867-08 A 826-LOW	<2	1	1		11/05/08 16:37
16	11M54994	L08100867-09 A 826-LOW	<2	1	1		11/05/08 17:09
17	11M54995	L08100745-03 A 826-SPE	<2	1	1		11/05/08 17:41
18	11M54996	L08100745-04 A 826-SPE	<2	1	1		11/05/08 18:13
19	11M54997	L08100745-05 A 826-SPE	<2	1	1		11/05/08 18:45
20	11M54998	SYSTEM BLANK	NA	1	1		11/05/08 19:17
21	11M54999	SYSTEM BLANK	NA	1	1		11/05/08 19:49
22	11M55000	WG287053-01 50ng BFB	NA	1	1	STD29166	11/05/08 20:21
23	11M55001	WG287053-02 50ug/L STD 8260	NA	1	1	STD29572	11/05/08 20:46
24	11M55002	WG286813-13 ALT SRC 20ug/L OXY 8260	NA	1	1	STD29698	11/05/08 21:18
25	11M55003	WG287054-01 BLANK 8260	NA	1	1		11/05/08 21:50
26	11M55004	WG287054-01 BLANK 8260	NA	1	1		11/05/08 22:21
27	11M55005	WG287054-02 LCS 20ug/L 8260	NA	1	1	STD29700	11/05/08 22:54
28	11M55006	WG287054-03 LCSD 20ug/L 8260	NA	1	1	STD29700	11/05/08 23:26
29	11M55007	SYSTEM BLANK	NA	1	1		11/05/08 23:59
30	11M55008	L08100762-04 A 826-SPE1	<2	1	1		11/06/08 00:32
31	11M55009	L08100777-10 A 826-SPE	<2	1	1		11/06/08 01:04
32	11M55010	L08100762-04 A 826-SPE1	<2	1	1		11/06/08 01:37
33	11M55011	L08100757-05 A 826-SPE1	<2	1	1		11/06/08 02:09
34	11M55012	L08100796-17 B 826-LOW	<2	1	1		11/06/08 02:41

Approved: November 10, 2008

Page: 1

Microbac Laboratories Inc.

Instrument Run Log

Instrument: HPMS11 Dataset: 110508
Analyst1: WTD Analyst2: NA
Method: 8260B SOP: MSV01 Rev: 12
Method: 624 SOP: MSV10 Rev: 11
Method: 5030/5035 SOP: PAT01 Rev: 12
Maintenance Log ID: 26539

Internal Standard: STD29280 Surrogate Standard: STD29393
CCV: STD29572 LCS: STD29700 MS/MSD: NA

Column 1 ID: RTX502.2 Column 2 ID: NA
Workgroups: 286975,287054

Comments:

Seq.	File ID	Sample Information	pH	Mat	Dil	Reference	Date/Time
35	11M55013	L08100777-07 A 826-SPE	<2	1	1		11/06/08 03:14
36	11M55014	L08100777-08 A 826-SPE	<2	1	1		11/06/08 03:46
37	11M55015	L08100777-09 A 826-SPE	<2	1	1		11/06/08 04:19
38	11M55016	L08100757-01 A 826-SPE1	<2	1	1		11/06/08 04:51
39	11M55017	L08100757-03 A 826-SPE1	<2	1	1		11/06/08 05:23
40	11M55018	L08100762-01 A 826-SPE1	<2	1	1		11/06/08 05:55
41	11M55019	L08100762-02 A 826-SPE1	<2	1	1		11/06/08 06:27
42	11M55020	L08100762-03 A 826-SPE1	<2	1	1		11/06/08 06:59
43	11M55021	L08100803-10 A 826-SPE	<2	1	1		11/06/08 07:30
44	11M55022	L08100886-01 A 826-SPE	5	1	1		11/06/08 08:02
45	11M55023	L08100886-02 A 826-SPE	<2	1	1		11/06/08 08:34
46	11M55024	SYSTEM BLANK	NA	1	1		11/06/08 09:06
47	11M55025	SYSTEM BLANK	NA	1	1		11/06/08 11:46

Comments

Seq.	Rerun	Dil.	Reason	Analytes
3	X	1	Carry-over contamination	
File ID: 11M54981				
	DNR			
14	X	1	Analyzed too dilute	
File ID: 11M54992				
18	X	10	Over Calibration Range	chloroform
File ID: 11M54996				
19	X	5		chloroform
File ID: 11M54997				
25	X	1	Carry-over contamination	
File ID: 11M55003				
	DNR			
35	X	5000	Over Calibration Range	Trichlorotrifluoromethane
File ID: 11M55013				
36	X	5000	Over Calibration Range	Trichlorotrifluoromethane

Approved: November 10, 2008

Page: 2

Microbac Laboratories Inc.

Instrument Run Log

Instrument: HPMS11 Dataset: 110508
Analyst1: WTD Analyst2: NA
Method: 8260B SOP: MSV01 Rev: 12
Method: 624 SOP: MSV10 Rev: 11
Method: 5030/5035 SOP: PAT01 Rev: 12
Maintenance Log ID: 26539

Internal Standard: STD29280 Surrogate Standard: STD29393
CCV: STD29572 LCS: STD29700 MS/MSD: NA

Column 1 ID: RTX502.2 Column 2 ID: NA
Workgroups: 286975,287054

Comments:

Comments

Seq.	Rerun	Dil.	Reason	Analytes
File ID: 11M55014				
37	X		Carry-over contamination	
File ID: 11M55015				
	DNR			
40	X	1	Carry-over contamination	
File ID: 11M55018				
	DNR			
41	X	1	Carry-over contamination	
File ID: 11M55019				
	DNR			
42	X	5	Carry-over contamination	
File ID: 11M55020				
	DNR, Had carry over and needs dilution for 1,1,1-TCA			
43	X	1	Carry-over contamination	
File ID: 11M55021				
	DNR			
44	X	1	Carry-over contamination	
File ID: 11M55022				
	DNR			
45	X	1	Missed Tune	
File ID: 11M55023				
	DNR			

Approved: November 10, 2008

Page: 3

Microbac Laboratories Inc.

Instrument Run Log

Instrument: HPMS6 Dataset: 110708
Analyst1: CAA Analyst2: NA
Method: 8260B SOP: MSV01 Rev: 12
Method: 5030B/5035 SOP: PAT01 Rev: 11
Method: 624 SOP: MSV10 Rev: 7
Maintenance Log ID: 26583

Internal Standard: STD29613 Surrogate Standard: STD29540
CCV: STD29572 LCS: STD29700 MS/MSD: STD29700

Column 1 ID: RTX502.2 Column 2 ID: NA
Workgroups: WG287207

Comments:

Seq.	File ID	Sample Information	pH	Mat	Dil	Reference	Date/Time
1	6M79541	WG287206-01 BFB 50ng STD 8260	NA	1	1	STD29166	11/07/08 07:50
2	6M79542	WG287206-01 BFB 50ng STD 8260	NA	1	1	STD29166	11/07/08 08:08
3	6M79543	WG287206-02 50ug/L STD 8260	NA	1	1	STD29572	11/07/08 08:36
4	6M79544	WG287206-02 50ug/L STD 8260	NA	1	1	STD29572	11/07/08 09:15
5	6M79545	SYSTEM CHECK	NA	1	1		11/07/08 09:49
6	6M79546	SYSTEM CHECK	NA	1	1		11/07/08 10:21
7	6M79547	WG287206-01 BFB 50ng STD 8260	NA	1	1	STD29166	11/07/08 11:30
8	6M79548	WG287206-02 50ug/L STD 8260	NA	1	1	STD29572	11/07/08 12:00
9	6M79549	WG287207-01 VBLK1107 BLANK 8260	NA	1	1		11/07/08 12:35
10	6M79550	WG287207-01 VBLK1107 BLANK 8260	NA	1	1		11/07/08 13:07
11	6M79551	WG287207-02 20ug/L LCS STD 8260	NA	1	1	STD29700	11/07/08 13:39
12	6M79552	L08100793-03 B 5X 826-SPE	<2	1	5		11/07/08 14:11
13	6M79553	L08100867-05 B 826-SPE	<2	1	1		11/07/08 14:43
14	6M79554	L08100867-06 B 826-SPE	<2	1	1		11/07/08 15:15
15	6M79555	L08100803-02 A REF 826-SPE	<2	1	1		11/07/08 15:47
16	6M79556	L08100803-03 A MS 826-SPE	<2	1	1		11/07/08 16:18
17	6M79557	L08100803-04 A MSD 826-SPE	<2	1	1		11/07/08 16:50
18	6M79558	L08110077-01 10X 826-TC	NA	17	10		11/07/08 17:22
19	6M79559	L08100803-06 A 826-SPE	<2	1	1		11/07/08 17:54
20	6M79560	L08100803-09 A 826-SPE	<2	1	1		11/07/08 18:26
21	6M79561	L08100863-01 A 826-SPE	<2	1	1		11/07/08 18:58
22	6M79562	L08100864-01 A 826-SPE	<2	1	1		11/07/08 19:30
23	6M79563	L08100865-01 A 826-SPE	<2	1	1		11/07/08 20:03
24	6M79564	L08100803-07 A 826-SPE	<2	1	1		11/07/08 20:35
25	6M79565	L08100803-08 A 826-SPE	<2	1	1		11/07/08 21:07
26	6M79566	L08100867-04 A 826-LOW	<2	1	1		11/07/08 21:39
27	6M79567	L08100867-01 A REF 826-LOW	<2	1	1		11/07/08 22:11
28	6M79568	L08100867-02 A MS 826-LOW	<2	1	1		11/07/08 22:43
29	6M79569	L08100867-03 A MSD 826-LOW	<2	1	1		11/07/08 23:16
30	6M79570	SYSTEM BLANK	NA	1	1		11/07/08 23:48
31	6M79571	SYSTEM BLANK	NA	1	1		11/08/08 00:20
32	6M79572	VIAL CHECK 11/7	NA	1	1		11/08/08 00:52
33	6M79573	VIAL HCL CHECK 11/7	NA	1	1		11/08/08 01:24
34	6M79574	SYSTEM CHECK	NA	1	1		11/08/08 01:56

Approved: November 14, 2008

Page: 1

Microbac Laboratories Inc.

Instrument Run Log

Instrument: HPMS6 Dataset: 110708
Analyst1: CAA Analyst2: NA
Method: 8260B SOP: MSV01 Rev: 12
Method: 5030B/5035 SOP: PAT01 Rev: 11
Method: 624 SOP: MSV10 Rev: 7
Maintenance Log ID: 26583

Internal Standard: STD29613 Surrogate Standard: STD29540
CCV: STD29572 LCS: STD29700 MS/MSD: STD29700

Column 1 ID: RTX502.2 Column 2 ID: NA
Workgroups: WG287207

Comments:

Comments

Seq.	Rerun	Dil.	Reason	Analytes
9	X		Carry-over contamination	
File ID: 6M79549				
WG287207-01 VBLK1107 BLANK 8260				
10				
File ID: 6M79550				
WG287207-01 VBLK1107 BLANK 8260 - SS Tol low.				
11				
File ID: 6M79551				
WG287207-02 20ug/L LCS STD 8260 - SS Tol low.				
13				
File ID: 6M79553				
L08100867-05 B 826-SPE - SS Tol low.				
14				
File ID: 6M79554				
L08100867-06 B 826-SPE - SS Tol low.				
18	X		Surrogate standard failure	SS BFB, Tol low.
File ID: 6M79558				
L08110077-01 10X 826-TC				
22	X	5	Over Calibration Range	cis-1,2-DCE
File ID: 6M79562				
L08100864-01 A 826-SPE				
26				
File ID: 6M79566				
L08100867-04 A 826-LOW - SS Tol low.				
27				
File ID: 6M79567				
L08100867-01 A REF 826-LOW - SS Tol low.				

Approved: November 14, 2008

Page: 2

Microbac Laboratories Inc.

Instrument Run Log

Instrument: HPMS14 Dataset: 110808
Analyst1: WTD Analyst2: NA
Method: 8260B SOP: MSV01 Rev: 12
Method: 5030B/5035 SOP: PAT01 Rev: 11

Maintenance Log ID: 26586

Internal Standard: STD29398 Surrogate Standard: STD29729
CCV: STD29572 LCS: STD29700 MS/MSD: NA

Column 1 ID: RTX502.2 Column 2 ID: NA
Workgroups: 287340

Comments:

Seq.	File ID	Sample Information	pH	Mat	Dil	Reference	Date/Time
1	14M09702	WG287339-01 50ng BFB	NA	1	1	STD29166	11/08/08 17:56
2	14M09703	WG287339-02 50ug/L STD 8260	NA	1	1	STD29572	11/08/08 18:20
3	14M09704	WG287340-01 VBLK1108 BLANK 82560	NA	1	1		11/08/08 19:02
4	14M09705	WG287340-01 VBLK1108 BLANK 82561	NA	1	1		11/08/08 19:33
5	14M09706	WG287340-02 20ug/L LCS 8260	NA	1	1	STD29700	11/08/08 20:04
6	14M09707	WG287340-03 20ug/L LCSD 8260	NA	1	1	STD29700	11/08/08 20:35
7	14M09708	L08100842-01 10X A 826-TC	NA	17	10		11/08/08 21:06
8	14M09709	L08100762-02 B 826-SPE	<2	1	1		11/08/08 21:37
9	14M09710	L08100762-03 B 5X 826-SPE	<2	1	5		11/08/08 22:07
10	14M09711	L08100886-01 B 826-SPE	<2	1	1		11/08/08 22:39
11	14M09712	L08100886-02 B 826-SPE	<2	1	1		11/08/08 23:10
12	14M09713	L08100886-03 A 826-SPE	7	1	1		11/08/08 23:41
13	14M09714	L08100886-04 A 826-SPE	<2	1	1		11/09/08 00:12
14	14M09715	L08100886-05 A 826-SPE	<2	1	1		11/09/08 00:43
15	14M09716	L08100886-06 A 826-SPE	<2	1	1		11/09/08 01:14
16	14M09717	L08100886-07 A 826-SPE	<2	1	1		11/09/08 01:45
17	14M09718	L08100867-11 A 50,000X 826-LOW	<2	1	50000		11/09/08 02:16
18	14M09719	L08100887-01 A 100X 826-LOW	<2	1	100		11/09/08 02:47
19	14M09720	L08100887-02 A 10,000X 826-LOW	<2	1	10000		11/09/08 03:18
20	14M09721	L08100887-03 A 10,000X 826-LOW	<2	1	10000		11/09/08 03:48
21	14M09722	L08100777-09 B 500X 826-SPE	<2	1	500		11/09/08 04:20
22	14M09723	L08100777-07 B 5000X 826-SPE	<2	1	5000		11/09/08 04:51
23	14M09724	L08100777-08 B 5000X 826-SPE	<2	1	5000		11/09/08 05:22
24	14M09725	BLANK	NA	1	1		11/09/08 05:53
25	14M09726	BLANK	NA	1	1		11/09/08 06:24

Comments

Seq.	Rerun	Dil.	Reason	Analytes
10 File ID: 14M09711	X		Internal standard and surrogate standard failure	
11 File ID: 14M09712	X		Surrogate standard failure	

Approved: November 14, 2008

Page: 1

Microbac Laboratories Inc.

Instrument Run Log

Instrument: HPMS14 Dataset: 110808
Analyst1: WTD Analyst2: NA
Method: 8260B SOP: MSV01 Rev: 12
Method: 5030B/5035 SOP: PAT01 Rev: 11

Maintenance Log ID: 26586

Internal Standard: STD29398 Surrogate Standard: STD29729
CCV: STD29572 LCS: STD29700 MS/MSD: NA

Column 1 ID: RTX502.2 Column 2 ID: NA
Workgroups: 287340

Comments:

Comments

Seq.	Rerun	Dil.	Reason	Analytes
13	X		Surrogate standard failure	
File ID: 14M09714				
14	X		Surrogate standard failure	
File ID: 14M09715				
15	X		Surrogate standard failure	
File ID: 14M09716				
16	X		Surrogate standard failure	
File ID: 14M09717				
17	X	100000	Over Calibration Range	methylene chloride
File ID: 14M09718				
21	X	50	Analyzed too dilute	Trichlorofluoromethane
File ID: 14M09722				
22	X	5000	Internal standard failure	
File ID: 14M09723				
23	X	5000	Internal standard failure	
File ID: 14M09724				

Approved: November 14, 2008

Page: 2

Microbac Laboratories Inc.

Instrument Run Log

Instrument: HPMS14 Dataset: 111108
Analyst1: WTD Analyst2: NA
Method: 8260B SOP: MSV01 Rev: 12
Method: 5030B/5035 SOP: PAT01 Rev: 11
Method: 624 SOP: MSV10 Rev: 11
Maintenance Log ID: 26686

Internal Standard: STD29611 Surrogate Standard: STD29729
CCV: STD29811, STD29743 LCS: STD29761, STD29744 MS/MSD: NA

Column 1 ID: RTX502.2 Column 2 ID: NA
Workgroups: 287499

Comments:

Seq.	File ID	Sample Information	pH	Mat	Dil	Reference	Date/Time
1	14M09752	WG287498-01 50ng BFB	NA	1	1	STD29166	11/11/08 08:28
2	14M09753	WG287498-02 50ug/L STD 8260	NA	1	1	STD29572	11/11/08 08:52
3	14M09754	WG287498-02 50ug/L STD 8260	NA	1	1	STD29572	11/11/08 09:23
4	14M09755	WG287500-01 CCV A9FOO	NA	1	1	STD29743	11/11/08 09:54
5	14M09756	WG287499-01 BLANK 8260	NA	1	1		11/11/08 10:25
6	14M09757	WG287499-01 BLANK 8260	NA	1	1		11/11/08 10:56
7	14M09758	WG287499-02 LCS 20ug/L 8260	NA	1	1	STD29761	11/11/08 11:27
8	14M09759	WG287499-03 LCSD 20ug/L 8260	NA	1	1	STD29761	11/11/08 11:58
9	14M09760	WG287499-04 LCS A9FOO	NA	1	1	STD29744	11/11/08 12:30
10	14M09761	WG287499-05 LCSD A9FOO	NA	1	1	STD29744	11/11/08 13:01
11	14M09762	SYSTEM BLANK	NA	1	1		11/11/08 13:31
12	14M09763	L08110122-04 B 826-SPE, A9	7	1	1		11/11/08 14:02
13	14M09764	L08110122-05 B 826-SPE, A9	7<2	1	1		11/11/08 14:33
14	14M09765	L08110122-01 B 2X 826-SPE, A9	7	1	2		11/11/08 15:04
15	14M09766	L08110182-02 B 826-SPE, A9	7	1	1		11/11/08 15:35
16	14M09767	L08110182-03 B 826-SPE, A9	7	1	1		11/11/08 16:06
17	14M09768	L08110182-01 B 20X 826-SPE, A9	<2	1	20		11/11/08 16:37
18	14M09769	L08110182-04 B 20X 826-SPE, A9	<2	1	20		11/11/08 17:08
19	14M09770	L08100777-08 C 5000X 826-SPE	<2	1	5000		11/11/08 17:39
20	14M09771	L08100777-07 C 5000X 826-SPE	<2	1	5000		11/11/08 18:10
21	14M09772	L08100777-09 C 50X 826-SPE	<2	1	50		11/11/08 18:41
22	14M09773	L08100867-11 B 100000X 826-LOW	<2	1	100000		11/11/08 19:12
23	14M09774	L08100887-01 B 826-LOW	<2	1	1		11/11/08 19:44
24	14M09775	SYSTEM BLANK	NA	1	1		11/11/08 20:15
25	14M09776	SYSTEM BLANK	NA	1	1		11/11/08 20:45

Approved: November 20, 2008

Page: 1

Checklist ID: 32896

00078213

Microbac Laboratories Inc.

Data Checklist

Date: 10-OCT-2008

Analyst: MDA

Analyst: NA

Method: 8260

Instrument: HPMS14

Curve Workgroup: NA

Runlog ID: 24813

Analytical Workgroups: WG284610

System Performance Check	NA
BFB	X
Initial Calibration	X
Average RF	X
Linear Reg or Higher Order Curve	X
Second Source standard % Difference	X
Continuing Calibration /Check Standards	X
Project/Client Specific Requirements	X
Special Standards	X
Blanks	NA
TCL's	NA
Surrogates	NA
LCS (Laboratory Control Sample)	NA
Recoveries	NA
Surrogates	X
MS/MSD/Duplicates	NA
Samples	NA
TCL Hits	NA
Spectra of TCL Hits	NA
Surrogates	NA
Internal Standards Criteria	X
Library Searches	NA
Calculations & Correct Factors	NA
Dilutions Run	NA
Reruns	NA
Manual Integrations	X
Case Narrative	NA
Results Reporting/Data Qualifiers	X
KOBRA Workgroup Data	X
Check for Completeness	X
Primary Reviewer	MDA
Secondary Reviewer	
Check for compliance with method and project specific requirements	X
Check the completeness of reported information	X
Check the information for the report narrative	X
Check the reasonableness of the results	X

Primary Reviewer: 21-OCT-2008

Secondary Reviewer:

CHECKLIST1 - Modified 03/05/2008

Generated: OCT-21-2008 13:05:31

Microbac Laboratories Inc.

Data Checklist

Date: 28-OCT-2008
Analyst: CAA
Analyst: NA
Method: 8260
Instrument: HPMS6
Curve Workgroup: NA
Runlog ID: 25021
Analytical Workgroups: WG286204

System Performance Check	X
BFB	X
Initial Calibration	X
Average RF	X
Linear Reg or Higher Order Curve	X
Second Source standard % Difference	X
Continuing Calibration /Check Standards	NA
Project/Client Specific Requirements	NA
Special Standards	NA
Blanks	NA
TCL's	NA
Surrogates	NA
LCS (Laboratory Control Sample)	NA
Recoveries	NA
Surrogates	NA
MS/MSD/Duplicates	NA
Samples	NA
TCL Hits	NA
Spectra of TCL Hits	NA
Surrogates	NA
Internal Standards Criteria	NA
Library Searches	NA
Calculations & Correct Factors	NA
Dilutions Run	NA
Reruns	NA
Manual Integrations	X
Case Narrative	X
Results Reporting/Data Qualifiers	X
KOBRA Workgroup Data	X
Check for Completeness	X
Primary Reviewer	CAA
Secondary Reviewer	MDA
Check for compliance with method and project specific requirements	X
Check the completeness of reported information	X
Check the information for the report narrative	X
Check the reasonableness of the results	X

Primary Reviewer:
31-OCT-2008

Secondary Reviewer:
02-NOV-2008

CHECKLIST1 - Modified 03/05/2008
Generated: NOV-02-2008 21:17:30

Checklist ID: 33490

00078215

Microbac Laboratories Inc.

Data Checklist

Date: 03-NOV-2008

Analyst: WTD

Analyst: NA

Method: 8260

Instrument: HPMS11

Curve Workgroup: NA

Runlog ID: 25070

Analytical Workgroups: 286813

System Performance Check	NA
BFB	X
Initial Calibration	X
Average RF	X
Linear Reg or Higher Order Curve	X
Second Source standard % Difference	X
Continuing Calibration /Check Standards	X
Project/Client Specific Requirements	X
Special Standards	
Blanks	X
TCL's	X
Surrogates	X
LCS (Laboratory Control Sample)	X
Recoveries	X
Surrogates	X
MS/MSD/Duplicates	
Samples	
TCL Hits	X
Spectra of TCL Hits	X
Surrogates	X
Internal Standards Criteria	X
Library Searches	NA
Calculations & Correct Factors	X
Dilutions Run	
Reruns	
Manual Integrations	X
Case Narrative	X
Results Reporting/Data Qualifiers	X
KOBRA Workgroup Data	X
Check for Completeness	X
Primary Reviewer	WTD
Secondary Reviewer	
Check for compliance with method and project specific requirements	
Check the completeness of reported information	
Check the information for the report narrative	
Check the reasonableness of the results	

Primary Reviewer: 11-NOV-2008

Secondary Reviewer:

CHECKLIST1 - Modified 03/05/2008

Generated: NOV-11-2008 11:37:11

Checklist ID: 33439

00078216

Microbac Laboratories Inc.

Data Checklist

Date: 05-NOV-2008

Analyst: WTD

Analyst: NA

Method: 8260

Instrument: HPMS11

Curve Workgroup: NA

Runlog ID: 25154

Analytical Workgroups: 286975,287054

System Performance Check	NA
BFB	X
Initial Calibration	X
Average RF	X
Linear Reg or Higher Order Curve	X
Second Source standard % Difference	X
Continuing Calibration /Check Standards	X
Project/Client Specific Requirements	X
Special Standards	
Blanks	X
TCL's	X
Surrogates	X
LCS (Laboratory Control Sample)	X
Recoveries	X
Surrogates	X
MS/MSD/Duplicates	
Samples	X
TCL Hits	X
Spectra of TCL Hits	X
Surrogates	X
Internal Standards Criteria	X
Library Searches	NA
Calculations & Correct Factors	X
Dilutions Run	X
Reruns	X
Manual Integrations	
Case Narrative	X
Results Reporting/Data Qualifiers	X
KOBRA Workgroup Data	X
Check for Completeness	X
Primary Reviewer	WTD
Secondary Reviewer	LSB
Check for compliance with method and project specific requirements	X
Check the completeness of reported information	X
Check the information for the report narrative	X
Check the reasonableness of the results	X

Primary Reviewer:
07-NOV-2008

Secondary Reviewer:
10-NOV-2008

CHECKLIST1 - Modified 03/05/2008

Generated: NOV-10-2008 15:39:48

Checklist ID: 33529

00078217

Microbac Laboratories Inc.

Data Checklist

Date: 07-NOV-2008

Analyst: CAA

Analyst: NA

Method: 8260

Instrument: HPMS6

Curve Workgroup: NA

Runlog ID: 25206

Analytical Workgroups: WG287207

System Performance Check	X
BFB	X
Initial Calibration	NA
Average RF	NA
Linear Reg or Higher Order Curve	NA
Second Source standard % Difference	NA
Continuing Calibration /Check Standards	X
Project/Client Specific Requirements	X
Special Standards	NA
Blanks	X
TCL's	X
Surrogates	X
LCS (Laboratory Control Sample)	X
Recoveries	X
Surrogates	X
MS/MSD/Duplicates	X
Samples	X
TCL Hits	X
Spectra of TCL Hits	X
Surrogates	X
Internal Standards Criteria	X
Library Searches	NA
Calculations & Correct Factors	X
Dilutions Run	X
Reruns	X
Manual Integrations	NA
Case Narrative	X
Results Reporting/Data Qualifiers	X
KOBRA Workgroup Data	X
Check for Completeness	X
Primary Reviewer	CAA
Secondary Reviewer	LSB
Check for compliance with method and project specific requirements	X
Check the completeness of reported information	X
Check the information for the report narrative	X
Check the reasonableness of the results	X

Primary Reviewer:
12-NOV-2008

Secondary Reviewer:
14-NOV-2008

CHECKLIST1 - Modified 03/05/2008

Generated: NOV-14-2008 09:16:47

Checklist ID: 33535

00078218

Microbac Laboratories Inc.

Data Checklist

Date: 12-NOV-2008

Analyst: WTD

Analyst: NA

Method: 8260

Instrument: HPMS14

Curve Workgroup: NA

Runlog ID: 25209

Analytical Workgroups: 287340

System Performance Check	NA
BFB	X
Initial Calibration	X
Average RF	X
Linear Reg or Higher Order Curve	X
Second Source standard % Difference	X
Continuing Calibration /Check Standards	X
Project/Client Specific Requirements	X
Special Standards	
Blanks	X
TCL's	X
Surrogates	X
LCS (Laboratory Control Sample)	X
Recoveries	X
Surrogates	X
MS/MSD/Duplicates	
Samples	X
TCL Hits	X
Spectra of TCL Hits	X
Surrogates	X
Internal Standards Criteria	X
Library Searches	NA
Calculations & Correct Factors	X
Dilutions Run	X
Reruns	X
Manual Integrations	
Case Narrative	X
Results Reporting/Data Qualifiers	X
KOBRA Workgroup Data	X
Check for Completeness	X
Primary Reviewer	WTD
Secondary Reviewer	LSB
Check for compliance with method and project specific requirements	X
Check the completeness of reported information	X
Check the information for the report narrative	X
Check the reasonableness of the results	X

Primary Reviewer:
12-NOV-2008

Secondary Reviewer:
14-NOV-2008

CHECKLIST1 - Modified 03/05/2008

Generated: NOV-14-2008 08:34:16

Checklist ID: 33780

00078219

Microbac Laboratories Inc.

Data Checklist

Date: 11-NOV-2008

Analyst: WTD

Analyst: NA

Method: 8260

Instrument: HPMS14

Curve Workgroup: NA

Runlog ID: 25343

Analytical Workgroups: 287499

System Performance Check	NA
BFB	X
Initial Calibration	X
Average RF	X
Linear Reg or Higher Order Curve	X
Second Source standard % Difference	X
Continuing Calibration /Check Standards	X
Project/Client Specific Requirements	X
Special Standards	
Blanks	X
TCL's	X
Surrogates	X
LCS (Laboratory Control Sample)	X
Recoveries	X
Surrogates	X
MS/MSD/Duplicates	
Samples	X
TCL Hits	X
Spectra of TCL Hits	X
Surrogates	X
Internal Standards Criteria	X
Library Searches	NA
Calculations & Correct Factors	X
Dilutions Run	X
Reruns	X
Manual Integrations	
Case Narrative	X
Results Reporting/Data Qualifiers	X
KOBRA Workgroup Data	X
Check for Completeness	X
Primary Reviewer	WTD
Secondary Reviewer	MDA
Check for compliance with method and project specific requirements	X
Check the completeness of reported information	X
Check the information for the report narrative	X
Check the reasonableness of the results	X

Primary Reviewer:
20-NOV-2008

Secondary Reviewer:
20-NOV-2008

CHECKLIST1 - Modified 03/05/2008

Generated: NOV-20-2008 16:55:36

Microbac Laboratories Inc.

HOLDING TIMES
EQUIVALENT TO AFCEE FORM 9

00078220

Analytical Method: 8260B

AAB#: WG286975

Login Number: L08100867

Client ID	Date Collected	Date Received	Date Extracted	Max Hold Time Ext.	Time Held Ext.	Date Analyzed	Max Hold Time Anal	Time Held Anal.	Q
LHSMW15-102708	10/27/08	10/30/08	11/05/08	14	9.14	11/05/08	14	9.14	
LHSMW20-102708	10/27/08	10/30/08	11/05/08	14	9.05	11/05/08	14	9.05	

* EXT = SEE PROJECT QAPP REQUIREMENTS
*ANAL = SEE PROJECT QAPP REQUIREMENTS

HOLD_TIMES - Modified 03/06/2008
PDF File ID: 1251120
Report generated 11/20/2008 10:12

Microbac®

Microbac Laboratories Inc.

HOLDING TIMES
EQUIVALENT TO AFCEE FORM 9

00078221

Analytical Method: 8260B

AAB#: WG287207

Login Number: L08100867

Client ID	Date Collected	Date Received	Date Extracted	Max Hold Time Ext.	Time Held Ext.	Date Analyzed	Max Hold Time Anal	Time Held Anal.	Q
LHSMW23-102808	10/28/08	10/30/08	11/07/08	14	10.1	11/07/08	14	10.1	
LHSMW25-102808	10/28/08	10/30/08	11/07/08	14	10.4	11/07/08	14	10.4	
46WW02-102808	10/28/08	10/30/08	11/07/08	14	10.1	11/07/08	14	10.1	
LHSMW25-102808-MSD	10/28/08	10/30/08	11/07/08	14	10.4	11/07/08	14	10.4	
LHSMW25-102808-MS	10/28/08	10/30/08	11/07/08	14	10.4	11/07/08	14	10.4	
LHSMW25-102808-QA	10/28/08	10/30/08	11/07/08	14	10.4	11/07/08	14	10.4	

* EXT = SEE PROJECT QAPP REQUIREMENTS
*ANAL = SEE PROJECT QAPP REQUIREMENTS

HOLD_TIMES - Modified 03/06/2008
PDF File ID: 1251120
Report generated 11/20/2008 10:12

Microbac®

Microbac Laboratories Inc.

HOLDING TIMES
EQUIVALENT TO AFCEE FORM 9

00078222

Analytical Method: 8260B

AAB#: WG287340

Login Number: L08100867

Client ID	Date Collected	Date Received	Date Extracted	Max Hold Time Ext.	Time Held Ext.	Date Analyzed	Max Hold Time Anal	Time Held Anal.	Q
29WW16-102808	10/28/08	10/30/08	11/09/08	14	11.5	11/09/08	14	11.5	

* EXT = SEE PROJECT QAPP REQUIREMENTS
*ANAL = SEE PROJECT QAPP REQUIREMENTS

HOLD_TIMES - Modified 03/06/2008
PDF File ID: 1251120
Report generated 11/20/2008 10:12

Microbac®

Microbac Laboratories Inc.

HOLDING TIMES
EQUIVALENT TO AFCEE FORM 9

00078223

Analytical Method: 8260B

AAB#: WG287499

Login Number: L08100867

Client ID	Date Collected	Date Received	Date Extracted	Max Hold Time Ext.	Time Held Ext.	Date Analyzed	Max Hold Time Anal	Time Held Anal.	Q
29WW16-102808	10/28/08	10/30/08	11/11/08	14	14.2	11/11/08	14	14.2	*ANAL

* EXT = SEE PROJECT QAPP REQUIREMENTS
*ANAL = SEE PROJECT QAPP REQUIREMENTS

HOLD_TIMES - Modified 03/06/2008
PDF File ID: 1251120
Report generated 11/20/2008 10:12

Microbac®

Microbac Laboratories Inc.
SURROGATE STANDARDS

00078224

Login Number: L08100867
Instrument Id: HPMS11
Workgroup (AAB#): WG286975

Method: 8260
CAL ID: HPMS11-03-NOV-08
Matrix: Water

Sample Number	Dilution	Tag	1	2	3	4
L08100867-08	1.00	01	83.4	90.6	93.0	87.7
L08100867-09	1.00	01	84.2	90.4	92.7	86.3
WG286975-01	1.00	01	82.8	91.2	93.4	88.2
WG286975-02	1.00	01	81.5	91.8	91.9	86.9
WG286975-03	1.00	01	84.0	93.7	92.2	86.7

Surrogates	Surrogate Limits		
1 - 1,2-Dichloroethane-d4	80	-	120
2 - Dibromofluoromethane	86	-	118
3 - 4-Bromofluorobenzene	86	-	115
4 - Toluene-d8	88	-	110

Underline = Result out of surrogate limits

DL = surrogate diluted out
ND = surrogate not detected

SURROGATES - Modified 03/06/2008
PDF File ID: 1248284
Report generated: 11/20/2008 10:12

Microbac®

Microbac Laboratories Inc.
SURROGATE STANDARDS

Login Number: L08100867
Instrument Id: HPMS14
Workgroup (AAB#): WG287499

Method: 8260
CAL ID: HPMS14-11-OCT-08
Matrix: Water

Sample Number	Dilution	Tag	1	2	3	4
L08100867-11	100000	DL02	119	97.6	108	103
WG287499-01	1.00	01	112	101	107	101
WG287499-02	1.00	01	110	104	98.8	101
WG287499-03	1.00	01	109	105	98.0	101
WG287499-04	1.00	01	105	101	107	101
WG287499-05	1.00	01	107	101	108	102

Surrogates	Surrogate Limits		
1 - 1,2-Dichloroethane-d4	80	-	120
2 - Dibromofluoromethane	86	-	118
3 - 4-Bromofluorobenzene	86	-	115
4 - Toluene-d8	88	-	110

Underline = Result out of surrogate limits

DL = surrogate diluted out
ND = surrogate not detected

SURROGATES - Modified 03/06/2008
PDF File ID: 1248284
Report generated: 11/20/2008 10:12

Microbac®

Microbac Laboratories Inc.
SURROGATE STANDARDS

00078226

Login Number: L08100867
Instrument Id: HPMS14
Workgroup (AAB#): WG287340

Method: 8260
CAL ID: HPMS14-11-OCT-08
Matrix: Water

Sample Number	Dilution	Tag	1	2	3	4
L08100867-11	50000	DL01	125	106	107	101
WG287340-01	1.00	01	105	101	105	101
WG287340-02	1.00	01	103	101	97.9	102
WG287340-03	1.00	01	96.6	98.3	97.7	102

Surrogates	Surrogate Limits		
1 - 1,2-Dichloroethane-d4	80	-	120
2 - Dibromofluoromethane	86	-	118
3 - 4-Bromofluorobenzene	86	-	115
4 - Toluene-d8	88	-	110

Underline = Result out of surrogate limits

DL = surrogate diluted out
ND = surrogate not detected

SURROGATES - Modified 03/06/2008
PDF File ID: 1248284
Report generated: 11/20/2008 10:12

Microbac®

Microbac Laboratories Inc.
SURROGATE STANDARDS

Login Number: L08100867
Instrument Id: HPMS6
Workgroup (AAB#): WG287207

Method: 8260
CAL ID: HPMS6-28-OCT-08
Matrix: Water

Sample Number	Dilution	Tag	1	2	3	4
L08100867-01	1.00	01	112	111	91.9	87.8
L08100867-02	1.00	01	111	107	87.1	88.7
L08100867-03	1.00	01	103	104	90.9	89.7
L08100867-04	1.00	01	111	109	92.1	87.4
L08100867-05	1.00	01	88.9	94.1	92.8	84.8
L08100867-06	1.00	01	89.4	96.5	92.3	86.3
WG287207-01	1.00	01	83.4	92.1	90.4	85.5
WG287207-02	1.00	01	84.9	91.4	89.5	87.1

Surrogates	Surrogate Limits		
1 - 1,2-Dichloroethane-d4	80	-	120
2 - Dibromofluoromethane	86	-	118
3 - 4-Bromofluorobenzene	86	-	115
4 - Toluene-d8	88	-	110

Underline = Result out of surrogate limits

DL = surrogate diluted out
ND = surrogate not detected

SURROGATES - Modified 03/06/2008
PDF File ID: 1248284
Report generated: 11/20/2008 10:12

Microbac Laboratories Inc.

00078228

METHOD BLANK SUMMARY

Login Number: L08100867
Blank File ID: 11M54982
Prep Date: 11/05/08 10:45
Analyzed Date: 11/05/08 10:45
Analyst: WTD

Work Group: WG286975
Blank Sample ID: WG286975-01
Instrument ID: HPMS11
Method: 8260B

This Method Blank Applies To The Following Samples:

Client ID	Lab Sample ID	Lab File ID	Time Analyzed	TAG
LCS	WG286975-02	11M54983	11/05/08 11:17	01
LCS2	WG286975-03	11M54984	11/05/08 11:49	01
LHSMW20-102708	L08100867-08	11M54993	11/05/08 16:37	01
LHSMW15-102708	L08100867-09	11M54994	11/05/08 17:09	01

Report Name: BLANK_SUMMARY
PDF File ID: 1251121
Report generated 11/20/2008 10:12

Microbac Laboratories Inc.

00078229

METHOD BLANK SUMMARY

Login Number: L08100867
Blank File ID: 14M09705
Prep Date: 11/08/08 19:33
Analyzed Date: 11/08/08 19:33
Analyst: MDA

Work Group: WG287340
Blank Sample ID: WG287340-01
Instrument ID: HPMS14
Method: 8260B

This Method Blank Applies To The Following Samples:

Client ID	Lab Sample ID	Lab File ID	Time Analyzed	TAG
LCS	WG287340-02	14M09706	11/08/08 20:04	01
LCS2	WG287340-03	14M09707	11/08/08 20:35	01
29WW16-102808	L08100867-11	14M09718	11/09/08 02:16	DL01

Report Name: BLANK_SUMMARY
PDF File ID: 1251121
Report generated 11/20/2008 10:12

Microbac Laboratories Inc.

00078230

METHOD BLANK SUMMARY

Login Number: L08100867
Blank File ID: 14M09757
Prep Date: 11/11/08 10:56
Analyzed Date: 11/11/08 10:56
Analyst: WTD

Work Group: WG287499
Blank Sample ID: WG287499-01
Instrument ID: HPMS14
Method: 8260B

This Method Blank Applies To The Following Samples:

Client ID	Lab Sample ID	Lab File ID	Time Analyzed	TAG
LCS	WG287499-02	14M09758	11/11/08 11:27	01
LCS2	WG287499-03	14M09759	11/11/08 11:58	01
LCS	WG287499-04	14M09760	11/11/08 12:30	01
LCS2	WG287499-05	14M09761	11/11/08 13:01	01
29WW16-102808	L08100867-11	14M09773	11/11/08 19:12	DL02

Report Name: BLANK_SUMMARY
PDF File ID: 1251121
Report generated 11/20/2008 10:12

Microbac®

Microbac Laboratories Inc.

00078231

METHOD BLANK SUMMARY

Login Number: L08100867
Blank File ID: 6M79550
Prep Date: 11/07/08 13:07
Analyzed Date: 11/07/08 13:07
Analyst: CAA

Work Group: WG287207
Blank Sample ID: WG287207-01
Instrument ID: HPMS6
Method: 8260B

This Method Blank Applies To The Following Samples:

Client ID	Lab Sample ID	Lab File ID	Time Analyzed	TAG
LCS	WG287207-02	6M79551	11/07/08 13:39	01
LHSMW23-102808	L08100867-05	6M79553	11/07/08 14:43	01
46WW02-102808	L08100867-06	6M79554	11/07/08 15:15	01
LHSMW25-102808-QA	L08100867-04	6M79566	11/07/08 21:39	01
LHSMW25-102808	L08100867-01	6M79567	11/07/08 22:11	01
LHSMW25-102808-MS	L08100867-02	6M79568	11/07/08 22:43	01
LHSMW25-102808-MSD	L08100867-03	6M79569	11/07/08 23:16	01

Report Name: BLANK_SUMMARY
PDF File ID: 1251121
Report generated 11/20/2008 10:12

Microbac®

Microbac Laboratories Inc.

METHOD BLANK REPORT

00078232

Login Number: L08100867 Prep Date: 11/05/08 10:45 Sample ID: WG286975-01
Instrument ID: HPMS11 Run Date: 11/05/08 10:45 Prep Method: 5030B
File ID: 11M54982 Analyst: WTD Method: 8260B
Workgroup (AAB#): WG286975 Matrix: Water Units: ug/L
Contract #: DACA56-94-D-0020 Cal ID: HPMS11-03-NOV-08

Analytes	SDL	PQL	Concentration	Dilution	Qualifier
Acetone	2.50	10.0	2.50	1	U
Benzene	0.125	1.00	0.125	1	U
Bromobenzene	0.125	1.00	0.125	1	U
Bromochloromethane	0.200	1.00	0.200	1	U
Bromodichloromethane	0.250	1.00	0.250	1	U
Bromoform	0.500	1.00	0.500	1	U
Bromomethane	0.500	1.00	0.500	1	U
2-Butanone	2.50	10.0	2.50	1	U
n-Butylbenzene	0.250	1.00	0.250	1	U
sec-Butylbenzene	0.250	1.00	0.250	1	U
tert-Butylbenzene	0.250	1.00	0.250	1	U
Carbon disulfide	0.500	1.00	0.500	1	U
Carbon tetrachloride	0.250	1.00	0.250	1	U
Chlorobenzene	0.125	1.00	0.125	1	U
Chlorodibromomethane	0.250	1.00	0.250	1	U
Chloroethane	0.500	1.00	0.500	1	U
2-Chloroethyl vinyl ether	2.00	10.0	2.00	1	U
Chloroform	0.125	1.00	0.125	1	U
Chloromethane	0.250	1.00	0.250	1	U
2-Chlorotoluene	0.125	1.00	0.125	1	U
4-Chlorotoluene	0.250	1.00	0.250	1	U
1,2-Dibromo-3-chloropropane	1.00	5.00	1.00	1	U
1,2-Dibromoethane	0.250	1.00	0.250	1	U
Dibromomethane	0.250	1.00	0.250	1	U
1,2-Dichlorobenzene	0.125	1.00	0.125	1	U
1,3-Dichlorobenzene	0.250	1.00	0.250	1	U
1,4-Dichlorobenzene	0.125	1.00	0.125	1	U
Dichlorodifluoromethane	0.250	1.00	0.250	1	U
1,1-Dichloroethane	0.125	1.00	0.125	1	U
1,2-Dichloroethane	0.250	1.00	0.250	1	U
1,1-Dichloroethene	0.500	1.00	0.500	1	U
cis-1,2-Dichloroethene	0.250	1.00	0.250	1	U
trans-1,2-Dichloroethene	0.250	1.00	0.250	1	U
1,2-Dichloropropane	0.200	1.00	0.200	1	U
1,3-Dichloropropane	0.200	1.00	0.200	1	U
2,2-Dichloropropane	0.250	1.00	0.250	1	U
cis-1,3-Dichloropropene	0.250	1.00	0.250	1	U
trans-1,3-Dichloropropene	0.500	1.00	0.500	1	U
1,1-Dichloropropene	0.250	1.00	0.250	1	U
Ethylbenzene	0.250	1.00	0.250	1	U
2-Hexanone	2.50	10.0	2.50	1	U
Hexachlorobutadiene	0.250	1.00	0.250	1	U

Report Name: BLANK
PDF ID: 1248281
20-NOV-2008 10:12

Microbac®

Microbac Laboratories Inc.

METHOD BLANK REPORT

00078233

Login Number: L08100867 Prep Date: 11/05/08 10:45 Sample ID: WG286975-01
Instrument ID: HPMS11 Run Date: 11/05/08 10:45 Prep Method: 5030B
File ID: 11M54982 Analyst: WTD Method: 8260B
Workgroup (AAB#): WG286975 Matrix: Water Units: ug/L
Contract #: DACA56-94-D-0020 Cal ID: HPMS11-03-NOV-08

Analytes	SDL	PQL	Concentration	Dilution	Qualifier
Isopropylbenzene	0.250	1.00	0.250	1	U
p-Isopropyltoluene	0.250	1.00	0.250	1	U
4-Methyl-2-pentanone	2.50	10.0	2.50	1	U
Methylene chloride	0.250	5.00	0.250	1	U
Naphthalene	0.200	1.00	0.200	1	U
n-Propylbenzene	0.125	1.00	0.125	1	U
Styrene	0.125	1.00	0.125	1	U
1,1,1,2-Tetrachloroethane	0.250	1.00	0.250	1	U
1,1,2,2-Tetrachloroethane	0.125	1.00	0.125	1	U
Tetrachloroethene	0.250	1.00	0.250	1	U
Toluene	0.250	1.00	0.250	1	U
1,2,3-Trichlorobenzene	0.150	1.00	0.150	1	U
1,2,4-Trichlorobenzene	0.200	1.00	0.200	1	U
1,1,1-Trichloroethane	0.250	1.00	0.250	1	U
1,1,2-Trichloroethane	0.250	1.00	0.250	1	U
Trichloroethene	0.250	1.00	0.250	1	U
Trichlorofluoromethane	0.250	1.00	0.250	1	U
1,2,3-Trichloropropane	0.500	1.00	0.500	1	U
1,2,4-Trimethylbenzene	0.250	1.00	0.250	1	U
1,3,5-Trimethylbenzene	0.250	1.00	0.250	1	U
Vinyl acetate	2.50	10.0	2.50	1	U
Vinyl chloride	0.250	1.00	0.250	1	U
o-Xylene	0.250	1.00	0.250	1	U
m-,p-Xylene	0.500	1.00	0.500	1	U

Surrogates	% Recovery	Surrogate Limits	Qualifier
Dibromofluoromethane	91.2	86 - 118	PASS
1,2-Dichloroethane-d4	82.8	80 - 120	PASS
Toluene-d8	88.2	88 - 110	PASS
4-Bromofluorobenzene	93.4	86 - 115	PASS

SDL Method Detection Limit
PQL Reporting/Practical Quantitation Limit
ND Analyte Not detected at or above reporting limit
* |Analyte concentration| > RL

Report Name: BLANK
PDF ID: 1248281
20-NOV-2008 10:12

Microbac®

Microbac Laboratories Inc.

METHOD BLANK REPORT

00078234

Login Number: L08100867 Prep Date: 11/08/08 19:33 Sample ID: WG287340-01
Instrument ID: HPMS14 Run Date: 11/08/08 19:33 Prep Method: 5030B
File ID: 14M09705 Analyst: MDA Method: 8260B
Workgroup (AAB#): WG287340 Matrix: Water Units: ug/L
Contract #: DACA56-94-D-0020 Cal ID: HPMS14-11-OCT-08

Analytes	SDL	PQL	Concentration	Dilution	Qualifier
Acetone	2.50	10.0	2.50	1	U
Benzene	0.125	1.00	0.125	1	U
Bromobenzene	0.125	1.00	0.125	1	U
Bromochloromethane	0.200	1.00	0.200	1	U
Bromodichloromethane	0.250	1.00	0.250	1	U
Bromoform	0.500	1.00	0.500	1	U
Bromomethane	0.500	1.00	3.69	1	*
2-Butanone	2.50	10.0	2.50	1	U
n-Butylbenzene	0.250	1.00	0.250	1	U
sec-Butylbenzene	0.250	1.00	0.250	1	U
tert-Butylbenzene	0.250	1.00	0.250	1	U
Carbon disulfide	0.500	1.00	0.500	1	U
Carbon tetrachloride	0.250	1.00	0.250	1	U
Chlorobenzene	0.125	1.00	0.125	1	U
Chlorodibromomethane	0.250	1.00	0.250	1	U
Chloroethane	0.500	1.00	0.500	1	U
2-Chloroethyl vinyl ether	2.00	10.0	2.00	1	U
Chloroform	0.125	1.00	0.125	1	U
Chloromethane	0.250	1.00	0.454	1	J
2-Chlorotoluene	0.125	1.00	0.125	1	U
4-Chlorotoluene	0.250	1.00	0.250	1	U
1,2-Dibromo-3-chloropropane	1.00	5.00	1.00	1	U
1,2-Dibromoethane	0.250	1.00	0.250	1	U
Dibromomethane	0.250	1.00	0.250	1	U
1,2-Dichlorobenzene	0.125	1.00	0.125	1	U
1,3-Dichlorobenzene	0.250	1.00	0.250	1	U
1,4-Dichlorobenzene	0.125	1.00	0.125	1	U
Dichlorodifluoromethane	0.250	1.00	0.250	1	U
1,1-Dichloroethane	0.125	1.00	0.125	1	U
1,2-Dichloroethane	0.250	1.00	0.250	1	U
1,1-Dichloroethene	0.500	1.00	0.500	1	U
cis-1,2-Dichloroethene	0.250	1.00	0.250	1	U
trans-1,2-Dichloroethene	0.250	1.00	0.250	1	U
1,2-Dichloropropane	0.200	1.00	0.200	1	U
1,3-Dichloropropane	0.200	1.00	0.200	1	U
2,2-Dichloropropane	0.250	1.00	0.250	1	U
cis-1,3-Dichloropropene	0.250	1.00	0.250	1	U
trans-1,3-Dichloropropene	0.500	1.00	0.500	1	U
1,1-Dichloropropene	0.250	1.00	0.250	1	U
Ethylbenzene	0.250	1.00	0.250	1	U
2-Hexanone	2.50	10.0	2.50	1	U
Hexachlorobutadiene	0.250	1.00	0.250	1	U

Report Name: BLANK
PDF ID: 1248281
20-NOV-2008 10:12

Microbac®

Microbac Laboratories Inc.

METHOD BLANK REPORT

00078235

Login Number: L08100867 Prep Date: 11/08/08 19:33 Sample ID: WG287340-01
Instrument ID: HPMS14 Run Date: 11/08/08 19:33 Prep Method: 5030B
File ID: 14M09705 Analyst: MDA Method: 8260B
Workgroup (AAB#): WG287340 Matrix: Water Units: ug/L
Contract #: DACA56-94-D-0020 Cal ID: HPMS14-11-OCT-08

Analytes	SDL	PQL	Concentration	Dilution	Qualifier
Isopropylbenzene	0.250	1.00	0.250	1	U
p-Isopropyltoluene	0.250	1.00	0.250	1	U
4-Methyl-2-pentanone	2.50	10.0	2.50	1	U
Methylene chloride	0.250	5.00	0.250	1	U
Naphthalene	0.200	1.00	0.200	1	U
n-Propylbenzene	0.125	1.00	0.125	1	U
Styrene	0.125	1.00	0.125	1	U
1,1,1,2-Tetrachloroethane	0.250	1.00	0.250	1	U
1,1,2,2-Tetrachloroethane	0.125	1.00	0.125	1	U
Tetrachloroethene	0.250	1.00	0.250	1	U
Toluene	0.250	1.00	0.250	1	U
1,2,3-Trichlorobenzene	0.150	1.00	0.150	1	U
1,2,4-Trichlorobenzene	0.200	1.00	0.200	1	U
1,1,1-Trichloroethane	0.250	1.00	0.250	1	U
1,1,2-Trichloroethane	0.250	1.00	0.250	1	U
Trichloroethene	0.250	1.00	0.250	1	U
Trichlorofluoromethane	0.250	1.00	0.250	1	U
1,2,3-Trichloropropane	0.500	1.00	0.500	1	U
1,2,4-Trimethylbenzene	0.250	1.00	0.250	1	U
1,3,5-Trimethylbenzene	0.250	1.00	0.250	1	U
Vinyl acetate	2.50	10.0	2.50	1	U
Vinyl chloride	0.250	1.00	0.250	1	U
o-Xylene	0.250	1.00	0.250	1	U
m-,p-Xylene	0.500	1.00	0.500	1	U

Surrogates	% Recovery	Surrogate Limits	Qualifier
Dibromofluoromethane	101	86 - 118	PASS
1,2-Dichloroethane-d4	105	80 - 120	PASS
Toluene-d8	101	88 - 110	PASS
4-Bromofluorobenzene	105	86 - 115	PASS

SDL Method Detection Limit
PQL Reporting/Practical Quantitation Limit
ND Analyte Not detected at or above reporting limit
* |Analyte concentration| > RL

Report Name: BLANK
PDF ID: 1248281
20-NOV-2008 10:12

Microbac®

Microbac Laboratories Inc.

METHOD BLANK REPORT

00078236

Login Number: L08100867 Prep Date: 11/11/08 10:56 Sample ID: WG287499-01
Instrument ID: HPMS14 Run Date: 11/11/08 10:56 Prep Method: 5030B
File ID: 14M09757 Analyst: WTD Method: 8260B
Workgroup (AAB#): WG287499 Matrix: Water Units: ug/L
Contract #: DACA56-94-D-0020 Cal ID: HPMS14-11-OCT-08

Analytes	SDL	PQL	Concentration	Dilution	Qualifier
Acetone	2.50	10.0	2.50	1	U
Benzene	0.125	1.00	0.125	1	U
Bromobenzene	0.125	1.00	0.125	1	U
Bromochloromethane	0.200	1.00	0.200	1	U
Bromodichloromethane	0.250	1.00	0.250	1	U
Bromoform	0.500	1.00	0.500	1	U
Bromomethane	0.500	1.00	3.15	1	*
2-Butanone	2.50	10.0	2.50	1	U
n-Butylbenzene	0.250	1.00	0.250	1	U
sec-Butylbenzene	0.250	1.00	0.250	1	U
tert-Butylbenzene	0.250	1.00	0.250	1	U
Carbon disulfide	0.500	1.00	0.500	1	U
Carbon tetrachloride	0.250	1.00	0.250	1	U
Chlorobenzene	0.125	1.00	0.125	1	U
Chlorodibromomethane	0.250	1.00	0.250	1	U
Chloroethane	0.500	1.00	0.500	1	U
2-Chloroethyl vinyl ether	2.00	10.0	2.00	1	U
Chloroform	0.125	1.00	0.125	1	U
Chloromethane	0.250	1.00	0.250	1	U
2-Chlorotoluene	0.125	1.00	0.125	1	U
4-Chlorotoluene	0.250	1.00	0.250	1	U
1,2-Dibromo-3-chloropropane	1.00	5.00	1.00	1	U
1,2-Dibromoethane	0.250	1.00	0.250	1	U
Dibromomethane	0.250	1.00	0.250	1	U
1,2-Dichlorobenzene	0.125	1.00	0.125	1	U
1,3-Dichlorobenzene	0.250	1.00	0.250	1	U
1,4-Dichlorobenzene	0.125	1.00	0.125	1	U
Dichlorodifluoromethane	0.250	1.00	0.250	1	U
1,1-Dichloroethane	0.125	1.00	0.125	1	U
1,2-Dichloroethane	0.250	1.00	0.250	1	U
1,1-Dichloroethene	0.500	1.00	0.500	1	U
cis-1,2-Dichloroethene	0.250	1.00	0.250	1	U
trans-1,2-Dichloroethene	0.250	1.00	0.250	1	U
1,2-Dichloropropane	0.200	1.00	0.200	1	U
1,3-Dichloropropane	0.200	1.00	0.200	1	U
2,2-Dichloropropane	0.250	1.00	0.250	1	U
cis-1,3-Dichloropropene	0.250	1.00	0.250	1	U
trans-1,3-Dichloropropene	0.500	1.00	0.500	1	U
1,1-Dichloropropene	0.250	1.00	0.250	1	U
Ethylbenzene	0.250	1.00	0.250	1	U
2-Hexanone	2.50	10.0	2.50	1	U
Hexachlorobutadiene	0.250	1.00	0.250	1	U

Report Name: BLANK
PDF ID: 1248281
20-NOV-2008 10:12

Microbac®

Microbac Laboratories Inc.

METHOD BLANK REPORT

00078237

Login Number: L08100867 Prep Date: 11/11/08 10:56 Sample ID: WG287499-01
Instrument ID: HPMS14 Run Date: 11/11/08 10:56 Prep Method: 5030B
File ID: 14M09757 Analyst: WTD Method: 8260B
Workgroup (AAB#): WG287499 Matrix: Water Units: ug/L
Contract #: DACA56-94-D-0020 Cal ID: HPMS14-11-OCT-08

Analytes	SDL	PQL	Concentration	Dilution	Qualifier
Isopropylbenzene	0.250	1.00	0.250	1	U
p-Isopropyltoluene	0.250	1.00	0.250	1	U
4-Methyl-2-pentanone	2.50	10.0	2.50	1	U
Methylene chloride	0.250	5.00	0.250	1	U
Naphthalene	0.200	1.00	0.200	1	U
n-Propylbenzene	0.125	1.00	0.125	1	U
Styrene	0.125	1.00	0.125	1	U
1,1,1,2-Tetrachloroethane	0.250	1.00	0.250	1	U
1,1,2,2-Tetrachloroethane	0.125	1.00	0.125	1	U
Tetrachloroethene	0.250	1.00	0.250	1	U
Toluene	0.250	1.00	0.250	1	U
1,2,3-Trichlorobenzene	0.150	1.00	0.150	1	U
1,2,4-Trichlorobenzene	0.200	1.00	0.200	1	U
1,1,1-Trichloroethane	0.250	1.00	0.250	1	U
1,1,2-Trichloroethane	0.250	1.00	0.250	1	U
Trichloroethene	0.250	1.00	0.250	1	U
Trichlorofluoromethane	0.250	1.00	0.250	1	U
1,2,3-Trichloropropane	0.500	1.00	0.500	1	U
1,2,4-Trimethylbenzene	0.250	1.00	0.250	1	U
1,3,5-Trimethylbenzene	0.250	1.00	0.250	1	U
Vinyl acetate	2.50	10.0	2.50	1	U
Vinyl chloride	0.250	1.00	0.250	1	U
o-Xylene	0.250	1.00	0.250	1	U
m-,p-Xylene	0.500	1.00	0.500	1	U

Surrogates	% Recovery	Surrogate Limits	Qualifier
Dibromofluoromethane	101	86 - 118	PASS
1,2-Dichloroethane-d4	112	80 - 120	PASS
Toluene-d8	101	88 - 110	PASS
4-Bromofluorobenzene	107	86 - 115	PASS

SDL Method Detection Limit
PQL Reporting/Practical Quantitation Limit
ND Analyte Not detected at or above reporting limit
* |Analyte concentration| > RL

Report Name: BLANK
PDF ID: 1248281
20-NOV-2008 10:12

Microbac®

Microbac Laboratories Inc.

METHOD BLANK REPORT

00078238

Login Number: L08100867 Prep Date: 11/07/08 13:07 Sample ID: WG287207-01
Instrument ID: HPMS6 Run Date: 11/07/08 13:07 Prep Method: 5030B
File ID: 6M79550 Analyst: CAA Method: 8260B
Workgroup (AAB#): WG287207 Matrix: Water Units: ug/L
Contract #: DACA56-94-D-0020 Cal ID: HPMS6-28-OCT-08

Analytes	SDL	PQL	Concentration	Dilution	Qualifier
Acetone	2.50	10.0	2.50	1	U
Benzene	0.125	1.00	0.125	1	U
Bromobenzene	0.125	1.00	0.125	1	U
Bromochloromethane	0.200	1.00	0.200	1	U
Bromodichloromethane	0.250	1.00	0.250	1	U
Bromoform	0.500	1.00	0.500	1	U
Bromomethane	0.500	1.00	0.500	1	U
2-Butanone	2.50	10.0	2.50	1	U
n-Butylbenzene	0.250	1.00	0.250	1	U
sec-Butylbenzene	0.250	1.00	0.250	1	U
tert-Butylbenzene	0.250	1.00	0.250	1	U
Carbon disulfide	0.500	1.00	0.500	1	U
Carbon tetrachloride	0.250	1.00	0.250	1	U
Chlorobenzene	0.125	1.00	0.125	1	U
Chlorodibromomethane	0.250	1.00	0.250	1	U
Chloroethane	0.500	1.00	0.500	1	U
2-Chloroethyl vinyl ether	2.00	10.0	2.00	1	U
Chloroform	0.125	1.00	0.125	1	U
Chloromethane	0.250	1.00	0.250	1	U
2-Chlorotoluene	0.125	1.00	0.125	1	U
4-Chlorotoluene	0.250	1.00	0.250	1	U
1,2-Dibromo-3-chloropropane	1.00	5.00	1.00	1	U
1,2-Dibromoethane	0.250	1.00	0.250	1	U
Dibromomethane	0.250	1.00	0.250	1	U
1,2-Dichlorobenzene	0.125	1.00	0.125	1	U
1,3-Dichlorobenzene	0.250	1.00	0.250	1	U
1,4-Dichlorobenzene	0.125	1.00	0.125	1	U
Dichlorodifluoromethane	0.250	1.00	0.250	1	U
1,1-Dichloroethane	0.125	1.00	0.125	1	U
1,2-Dichloroethane	0.250	1.00	0.250	1	U
1,1-Dichloroethene	0.500	1.00	0.500	1	U
cis-1,2-Dichloroethene	0.250	1.00	0.250	1	U
trans-1,2-Dichloroethene	0.250	1.00	0.250	1	U
1,2-Dichloropropane	0.200	1.00	0.200	1	U
1,3-Dichloropropane	0.200	1.00	0.200	1	U
2,2-Dichloropropane	0.250	1.00	0.250	1	U
cis-1,3-Dichloropropene	0.250	1.00	0.250	1	U
trans-1,3-Dichloropropene	0.500	1.00	0.500	1	U
1,1-Dichloropropene	0.250	1.00	0.250	1	U
Ethylbenzene	0.250	1.00	0.250	1	U
2-Hexanone	2.50	10.0	2.50	1	U
Hexachlorobutadiene	0.250	1.00	0.250	1	U

Report Name: BLANK
PDF ID: 1248281
20-NOV-2008 10:12

Microbac®

Microbac Laboratories Inc.

METHOD BLANK REPORT

00078239

Login Number: L08100867 Prep Date: 11/07/08 13:07 Sample ID: WG287207-01
Instrument ID: HPMS6 Run Date: 11/07/08 13:07 Prep Method: 5030B
File ID: 6M79550 Analyst: CAA Method: 8260B
Workgroup (AAB#): WG287207 Matrix: Water Units: ug/L
Contract #: DACA56-94-D-0020 Cal ID: HPMS6-28-OCT-08

Analytes	SDL	PQL	Concentration	Dilution	Qualifier
Isopropylbenzene	0.250	1.00	0.250	1	U
p-Isopropyltoluene	0.250	1.00	0.250	1	U
4-Methyl-2-pentanone	2.50	10.0	2.50	1	U
Methylene chloride	0.250	5.00	0.455	1	J
Naphthalene	0.200	1.00	0.200	1	U
n-Propylbenzene	0.125	1.00	0.125	1	U
Styrene	0.125	1.00	0.125	1	U
1,1,1,2-Tetrachloroethane	0.250	1.00	0.250	1	U
1,1,2,2-Tetrachloroethane	0.125	1.00	0.125	1	U
Tetrachloroethene	0.250	1.00	0.250	1	U
Toluene	0.250	1.00	0.250	1	U
1,2,3-Trichlorobenzene	0.150	1.00	0.150	1	U
1,2,4-Trichlorobenzene	0.200	1.00	0.200	1	U
1,1,1-Trichloroethane	0.250	1.00	0.250	1	U
1,1,2-Trichloroethane	0.250	1.00	0.250	1	U
Trichloroethene	0.250	1.00	0.250	1	U
Trichlorofluoromethane	0.250	1.00	0.250	1	U
1,2,3-Trichloropropane	0.500	1.00	0.500	1	U
1,2,4-Trimethylbenzene	0.250	1.00	0.250	1	U
1,3,5-Trimethylbenzene	0.250	1.00	0.651	1	J
Vinyl acetate	2.50	10.0	2.50	1	U
Vinyl chloride	0.250	1.00	0.250	1	U
o-Xylene	0.250	1.00	0.250	1	U
m-,p-Xylene	0.500	1.00	0.500	1	U

Surrogates	% Recovery	Surrogate Limits	Qualifier
Dibromofluoromethane	92.1	86 - 118	PASS
1,2-Dichloroethane-d4	83.4	80 - 120	PASS
Toluene-d8	85.5	88 - 110	FAIL
4-Bromofluorobenzene	90.4	86 - 115	PASS

SDL Method Detection Limit
PQL Reporting/Practical Quantitation Limit
ND Analyte Not detected at or above reporting limit
* |Analyte concentration| > RL

Report Name: BLANK
PDF ID: 1248281
20-NOV-2008 10:12

Microbac®

Microbac Laboratories Inc.
LABORATORY CONTROL SAMPLE (LCS)

00078240

Login Number: L08100867 Run Date: 11/07/2008 Sample ID: WG287207-02
Instrument ID: HPMS6 Run Time: 13:39 Prep Method: 5030B
File ID: 6M79551 Analyst: CAA Method: 8260B
Workgroup (AAB#): WG287207 Matrix: Water Units: ug/L
QC Key: STD Lot#: STD29700 Cal ID: HPMS6-28-OCT-08

Analytes	Expected	Found	% Rec	LCS Limits	Q
Acetone	20.0	23.2	116	40 - 142	
Benzene	20.0	20.5	102	80 - 121	
Bromobenzene	20.0	21.3	107	80 - 120	
Bromochloromethane	20.0	23.7	119	65 - 130	
Bromodichloromethane	20.0	24.4	122	80 - 131	
Bromoform	20.0	18.5	92.4	70 - 130	
Bromomethane	20.0	22.1	110	30 - 145	
2-Butanone	20.0	15.6	78.1	30 - 150	
n-Butylbenzene	20.0	22.0	110	80 - 131	
sec-Butylbenzene	20.0	21.7	109	80 - 127	
tert-Butylbenzene	20.0	20.4	102	80 - 126	
Carbon disulfide	20.0	22.6	113	58 - 138	
Carbon tetrachloride	20.0	18.8	93.8	65 - 140	
Chlorobenzene	20.0	21.6	108	80 - 120	
Chlorodibromomethane	20.0	20.7	104	60 - 135	
Chloroethane	20.0	23.0	115	60 - 135	
2-Chloroethyl vinyl ether	20.0	19.8	98.8	58 - 151	
Chloroform	20.0	22.5	113	80 - 125	
Chloromethane	20.0	19.2	96.2	40 - 125	
2-Chlorotoluene	20.0	22.4	112	80 - 127	
4-Chlorotoluene	20.0	21.4	107	80 - 126	
1,2-Dibromo-3-chloropropane	20.0	18.2	90.8	50 - 130	
1,2-Dibromoethane	20.0	22.3	111	80 - 125	
Dibromomethane	20.0	25.0	125	75 - 125	
1,2-Dichlorobenzene	20.0	21.7	109	80 - 125	
1,3-Dichlorobenzene	20.0	21.7	108	80 - 120	
1,4-Dichlorobenzene	20.0	20.6	103	80 - 120	
Dichlorodifluoromethane	20.0	28.3	142	50 - 133	*
1,1-Dichloroethane	20.0	20.5	102	80 - 125	
1,2-Dichloroethane	20.0	21.2	106	80 - 129	
1,1-Dichloroethene	20.0	21.4	107	80 - 132	
cis-1,2-Dichloroethene	20.0	23.2	116	70 - 125	
trans-1,2-Dichloroethene	20.0	20.3	102	80 - 127	
1,2-Dichloropropane	20.0	20.6	103	80 - 120	
1,3-Dichloropropane	20.0	21.6	108	80 - 120	
2,2-Dichloropropane	20.0	18.4	92.1	80 - 133	
cis-1,3-Dichloropropene	20.0	21.6	108	70 - 130	
trans-1,3-Dichloropropene	20.0	18.0	89.9	80 - 130	
1,1-Dichloropropene	20.0	19.1	95.4	75 - 130	
Ethylbenzene	20.0	21.8	109	80 - 122	
2-Hexanone	20.0	16.4	82.1	55 - 130	

LCS - Modified 03/06/2008
PDF File ID: 1248282
Report generated: 11/20/2008 10:12

Microbac®

Microbac Laboratories Inc.
LABORATORY CONTROL SAMPLE (LCS)

00078241

Login Number: L08100867 Run Date: 11/07/2008 Sample ID: WG287207-02
Instrument ID: HPMS6 Run Time: 13:39 Prep Method: 5030B
File ID: 6M79551 Analyst: CAA Method: 8260B
Workgroup (AAB#): WG287207 Matrix: Water Units: ug/L
QC Key: STD Lot#: STD29700 Cal ID: HPMS6-28-OCT-08

Analytes	Expected	Found	% Rec	LCS Limits	Q
Hexachlorobutadiene	20.0	20.6	103	72 - 132	
Isopropylbenzene	20.0	17.4	86.9	80 - 122	
p-Isopropyltoluene	20.0	21.7	108	80 - 122	
4-Methyl-2-pentanone	20.0	17.7	88.6	64 - 140	
Methylene chloride	20.0	21.7	108	80 - 123	
Naphthalene	20.0	16.7	83.5	59 - 149	
n-Propylbenzene	20.0	19.3	96.3	80 - 129	
Styrene	20.0	19.4	96.8	80 - 123	
1,1,1,2-Tetrachloroethane	20.0	20.8	104	80 - 130	
1,1,2,2-Tetrachloroethane	20.0	19.6	97.9	79 - 125	
Tetrachloroethene	20.0	20.8	104	80 - 124	
Toluene	20.0	21.7	109	80 - 124	
1,2,3-Trichlorobenzene	20.0	15.4	77.1	55 - 140	
1,2,4-Trichlorobenzene	20.0	19.0	94.8	65 - 135	
1,1,1-Trichloroethane	20.0	20.4	102	80 - 134	
1,1,2-Trichloroethane	20.0	21.7	109	80 - 125	
Trichloroethene	20.0	22.0	110	80 - 122	
Trichlorofluoromethane	20.0	21.5	108	62 - 151	
1,2,3-Trichloropropane	20.0	20.6	103	75 - 125	
1,2,4-Trimethylbenzene	20.0	22.6	113	80 - 125	
1,3,5-Trimethylbenzene	20.0	19.7	98.6	80 - 127	
Vinyl acetate	20.0	13.3	66.5	10 - 150	
Vinyl chloride	20.0	29.3	146	65 - 140	*
o-Xylene	20.0	22.3	112	80 - 122	
m-,p-Xylene	40.0	45.8	115	80 - 122	

Surrogates	% Recovery	Surrogate Limits	Qualifier
Dibromofluoromethane	91.4	86 - 118	PASS
1,2-Dichloroethane-d4	84.9	80 - 120	PASS
Toluene-d8	87.1	88 - 110	FAIL
4-Bromofluorobenzene	89.5	86 - 115	PASS

* FAILS %REC LIMIT

LCS - Modified 03/06/2008
PDF File ID: 1248282
Report generated: 11/20/2008 10:12

Microbac®

Microbac Laboratories Inc.
LABORATORY CONTROL SAMPLE (LCS)

00078242

Login Number: L08100867 Analyst: MDA Prep Method: 5030B
Instrument ID: HPMS14 Matrix: Water Method: 8260B
Workgroup (AAB#): WG287340 Units: ug/L
QC Key: STD Lot #: STD29700

Sample ID: WG287340-02 LCS File ID: 14M09706 Run Date: 11/08/2008 20:04
Sample ID: WG287340-03 LCS2 File ID: 14M09707 Run Date: 11/08/2008 20:35

Analytes	LCS			LCS2			%RPD	%Rec Limits	RPD Lmt	Q
	Known	Found	% REC	Known	Found	% REC				
Acetone	20.0	19.1	95.4	20.0	17.5	87.4	8.75	40 - 142	20	
Benzene	20.0	20.9	104	20.0	21.4	107	2.57	80 - 121	20	
Bromobenzene	20.0	20.5	103	20.0	20.5	102	0.103	80 - 120	20	
Bromochloromethane	20.0	21.7	108	20.0	22.0	110	1.68	65 - 130	20	
Bromodichloromethane	20.0	23.7	118	20.0	23.4	117	1.08	80 - 131	20	
Bromoform	20.0	21.7	109	20.0	21.5	107	1.20	70 - 130	20	
Bromomethane	20.0	20.2	101	20.0	23.4	117	15.0	30 - 145	20	
2-Butanone	20.0	17.4	87.1	20.0	16.5	82.7	5.23	30 - 150	20	
n-Butylbenzene	20.0	21.8	109	20.0	23.8	119	8.45	80 - 131	20	
sec-Butylbenzene	20.0	21.5	107	20.0	23.0	115	6.58	80 - 127	20	
tert-Butylbenzene	20.0	21.4	107	20.0	22.6	113	5.72	80 - 126	20	
Carbon disulfide	20.0	5.79	29.0	20.0	6.08	30.4	4.79	58 - 138	20	*
Carbon tetrachloride	20.0	22.0	110	20.0	22.7	113	3.02	65 - 140	20	
Chlorobenzene	20.0	21.9	110	20.0	22.4	112	2.26	80 - 120	20	
Chlorodibromomethane	20.0	23.1	116	20.0	22.8	114	1.54	60 - 135	20	
Chloroethane	20.0	20.3	102	20.0	20.7	103	1.90	60 - 135	20	
2-Chloroethyl vinyl ether	20.0	40.8	204	20.0	41.8	209	2.40	58 - 151	20	*
Chloroform	20.0	23.4	117	20.0	23.4	117	0.0854	80 - 125	20	
Chloromethane	20.0	17.7	88.6	20.0	18.7	93.4	5.24	40 - 125	20	
2-Chlorotoluene	20.0	21.6	108	20.0	22.1	111	2.64	80 - 127	20	
4-Chlorotoluene	20.0	22.9	115	20.0	23.6	118	3.01	80 - 126	20	
1,2-Dibromo-3-chloropropane	20.0	20.6	103	20.0	20.0	100	3.12	50 - 130	20	
1,2-Dibromoethane	20.0	21.4	107	20.0	21.6	108	0.604	80 - 125	20	
Dibromomethane	20.0	22.4	112	20.0	21.8	109	2.60	75 - 125	20	
1,2-Dichlorobenzene	20.0	20.9	104	20.0	21.2	106	1.53	80 - 125	20	
1,3-Dichlorobenzene	20.0	21.1	105	20.0	21.8	109	3.32	80 - 120	20	
1,4-Dichlorobenzene	20.0	20.3	102	20.0	20.9	104	2.70	80 - 120	20	
Dichlorodifluoromethane	20.0	25.4	127	20.0	26.2	131	3.00	50 - 133	20	
1,1-Dichloroethane	20.0	22.8	114	20.0	23.0	115	0.524	80 - 125	20	
1,2-Dichloroethane	20.0	23.5	118	20.0	22.6	113	3.92	80 - 129	20	
1,1-Dichloroethene	20.0	20.6	103	20.0	21.3	106	3.16	80 - 132	20	
cis-1,2-Dichloroethene	20.0	21.9	110	20.0	22.1	110	0.680	70 - 125	20	
trans-1,2-Dichloroethene	20.0	21.2	106	20.0	21.3	106	0.383	80 - 127	20	
1,2-Dichloropropane	20.0	20.9	105	20.0	21.1	105	0.565	80 - 120	20	
1,3-Dichloropropane	20.0	21.7	109	20.0	21.8	109	0.466	80 - 120	20	
2,2-Dichloropropane	20.0	21.6	108	20.0	22.0	110	1.45	80 - 133	20	
cis-1,3-Dichloropropene	20.0	20.5	103	20.0	20.9	105	1.95	70 - 130	20	
trans-1,3-Dichloropropene	20.0	19.7	98.5	20.0	20.2	101	2.39	80 - 130	20	
1,1-Dichloropropene	20.0	21.7	109	20.0	22.6	113	3.83	75 - 130	20	
Ethylbenzene	20.0	22.3	111	20.0	23.2	116	3.97	80 - 122	20	

LCS_LCS2 - Modified 03/06/2008
PDF File ID: 1244537
Report generated: 11/20/2008 10:25

Microbac®

Microbac Laboratories Inc.
LABORATORY CONTROL SAMPLE (LCS)

00078243

Login Number: L08100867 Analyst: MDA Prep Method: 5030B
Instrument ID: HPMS14 Matrix: Water Method: 8260B
Workgroup (AAB#): WG287340 Units: ug/L
QC Key: STD Lot #: STD29700

Sample ID: WG287340-02 LCS File ID: 14M09706 Run Date: 11/08/2008 20:04
Sample ID: WG287340-03 LCS2 File ID: 14M09707 Run Date: 11/08/2008 20:35

Analytes	LCS			LCS2			%RPD	%Rec Limits	RPD Lmt	Q
	Known	Found	% REC	Known	Found	% REC				
2-Hexanone	20.0	22.6	113	20.0	21.4	107	5.30	55 - 130	20	
Hexachlorobutadiene	20.0	21.4	107	20.0	23.2	116	8.17	72 - 132	20	
Isopropylbenzene	20.0	19.9	99.4	20.0	20.8	104	4.57	80 - 122	20	
p-Isopropyltoluene	20.0	21.2	106	20.0	22.6	113	6.34	80 - 122	20	
4-Methyl-2-pentanone	20.0	20.4	102	20.0	19.9	99.6	2.21	64 - 140	20	
Methylene chloride	20.0	19.3	96.3	20.0	18.8	94.2	2.15	80 - 123	20	
Naphthalene	20.0	24.3	122	20.0	25.4	127	4.25	59 - 149	20	
n-Propylbenzene	20.0	22.0	110	20.0	23.4	117	6.32	80 - 129	20	
Styrene	20.0	21.5	108	20.0	22.1	111	2.78	80 - 123	20	
1,1,1,2-Tetrachloroethane	20.0	23.9	120	20.0	24.1	121	0.724	80 - 130	20	
1,1,2,2-Tetrachloroethane	20.0	20.6	103	20.0	20.1	101	2.58	79 - 125	20	
Tetrachloroethene	20.0	22.1	111	20.0	23.2	116	4.62	80 - 124	20	
Toluene	20.0	20.9	104	20.0	21.6	108	3.29	80 - 124	20	
1,2,3-Trichlorobenzene	20.0	22.6	113	20.0	23.4	117	3.47	55 - 140	20	
1,2,4-Trichlorobenzene	20.0	22.4	112	20.0	23.4	117	4.37	65 - 135	20	
1,1,1-Trichloroethane	20.0	23.9	120	20.0	24.2	121	1.24	80 - 134	20	
1,1,2-Trichloroethane	20.0	22.4	112	20.0	22.0	110	1.88	80 - 125	20	
Trichloroethene	20.0	21.1	106	20.0	21.6	108	2.42	80 - 122	20	
Trichlorofluoromethane	20.0	21.5	108	20.0	22.3	112	3.74	62 - 151	20	
1,2,3-Trichloropropane	20.0	21.5	107	20.0	20.8	104	3.45	75 - 125	20	
1,2,4-Trimethylbenzene	20.0	23.1	116	20.0	24.3	122	5.00	80 - 125	20	
1,3,5-Trimethylbenzene	20.0	23.2	116	20.0	24.6	123	6.04	80 - 127	20	
Vinyl acetate	20.0	19.1	95.6	20.0	18.9	94.6	0.989	10 - 150	20	
Vinyl chloride	20.0	24.9	124	20.0	25.5	128	2.60	65 - 140	20	
o-Xylene	20.0	22.0	110	20.0	23.2	116	5.10	80 - 122	20	
m-,p-Xylene	40.0	45.7	114	40.0	47.6	119	4.05	80 - 122	20	

Surogates	LCS	LCS2	Surrogate Limits	Qualifier
	% Recovery	% Recovery		
1,2-Dichloroethane-d4	103	96.6	80 - 120	PASS
Dibromofluoromethane	101	98.3	86 - 118	PASS
4-Bromofluorobenzene	97.9	97.7	86 - 115	PASS
Toluene-d8	102	102	88 - 110	PASS

* FAILS %REC LIMIT

\# FAILS RPD LIMIT

LCS_LCS2 - Modified 03/06/2008
PDF File ID: 1244537
Report generated: 11/20/2008 10:25

Microbac®

Microbac Laboratories Inc.
LABORATORY CONTROL SAMPLE (LCS)

00078244

Login Number: L08100867 Analyst: WTD Prep Method: 5030B
Instrument ID: HPMS14 Matrix: Water Method: 8260B
Workgroup (AAB#): WG287499 Units: ug/L
QC Key: STD Lot #: STD29761

Sample ID: WG287499-02 LCS File ID: 14M09758 Run Date: 11/11/2008 11:27
Sample ID: WG287499-03 LCS2 File ID: 14M09759 Run Date: 11/11/2008 11:58

Analytes	LCS			LCS2			%RPD	%Rec Limits	RPD Lmt	Q
	Known	Found	% REC	Known	Found	% REC				
Acetone	20.0	32.5	163	20.0	31.6	158	2.89	40 - 142	20	*
Benzene	20.0	21.5	107	20.0	21.9	109	1.96	80 - 121	20	
Bromobenzene	20.0	19.7	98.7	20.0	20.1	101	1.98	80 - 120	20	
Bromochloromethane	20.0	21.7	108	20.0	22.9	115	5.66	65 - 130	20	
Bromodichloromethane	20.0	24.7	124	20.0	25.2	126	2.07	80 - 131	20	
Bromoform	20.0	21.7	109	20.0	23.1	116	6.21	70 - 130	20	
Bromomethane	25.0	31.3	125	25.0	30.3	121	3.24	30 - 145	20	
2-Butanone	20.0	18.4	91.8	20.0	19.7	98.7	7.31	30 - 150	20	
n-Butylbenzene	20.0	23.4	117	20.0	22.9	114	2.21	80 - 131	20	
sec-Butylbenzene	20.0	21.8	109	20.0	22.0	110	0.901	80 - 127	20	
tert-Butylbenzene	20.0	21.1	106	20.0	21.4	107	1.14	80 - 126	20	
Carbon disulfide	20.0	20.2	101	20.0	20.5	103	1.80	58 - 138	20	
Carbon tetrachloride	20.0	22.6	113	20.0	23.4	117	3.26	65 - 140	20	
Chlorobenzene	20.0	22.1	111	20.0	22.4	112	1.28	80 - 120	20	
Chlorodibromomethane	20.0	22.7	114	20.0	23.8	119	4.52	60 - 135	20	
Chloroethane	25.0	28.4	113	25.0	28.5	114	0.351	60 - 135	20	
2-Chloroethyl vinyl ether	20.0	37.8	189	20.0	41.3	206	8.80	58 - 151	20	*
Chloroform	20.0	25.5	128	20.0	25.9	130	1.73	80 - 125	20	*
Chloromethane	25.0	28.6	114	25.0	30.5	122	6.63	40 - 125	20	
2-Chlorotoluene	20.0	22.6	113	20.0	22.6	113	0.231	80 - 127	20	
4-Chlorotoluene	20.0	22.5	112	20.0	22.6	113	0.571	80 - 126	20	
1,2-Dibromo-3-chloropropane	20.0	21.0	105	20.0	21.5	107	2.07	50 - 130	20	
1,2-Dibromoethane	20.0	21.4	107	20.0	22.7	113	5.95	80 - 125	20	
Dibromomethane	20.0	22.2	111	20.0	22.5	112	1.29	75 - 125	20	
1,2-Dichlorobenzene	20.0	20.6	103	20.0	21.0	105	1.72	80 - 125	20	
1,3-Dichlorobenzene	20.0	20.9	104	20.0	21.0	105	0.490	80 - 120	20	
1,4-Dichlorobenzene	20.0	20.2	101	20.0	20.5	103	1.36	80 - 120	20	
Dichlorodifluoromethane	25.0	37.8	151	25.0	38.5	154	2.00	50 - 133	20	*
1,1-Dichloroethane	20.0	25.9	130	20.0	25.8	129	0.365	80 - 125	20	*
1,2-Dichloroethane	20.0	25.3	127	20.0	25.6	128	1.03	80 - 129	20	
1,1-Dichloroethene	20.0	23.0	115	20.0	23.1	116	0.560	80 - 132	20	
cis-1,2-Dichloroethene	20.0	22.6	113	20.0	23.6	118	4.17	70 - 125	20	
trans-1,2-Dichloroethene	20.0	22.2	111	20.0	22.9	114	2.95	80 - 127	20	
1,2-Dichloropropane	20.0	22.1	110	20.0	22.6	113	2.26	80 - 120	20	
1,3-Dichloropropane	20.0	22.1	111	20.0	23.1	116	4.56	80 - 120	20	
2,2-Dichloropropane	20.0	22.6	113	20.0	23.4	117	3.60	80 - 133	20	
cis-1,3-Dichloropropene	20.0	21.9	110	20.0	22.4	112	2.25	70 - 130	20	
trans-1,3-Dichloropropene	20.0	20.9	104	20.0	21.7	108	3.75	80 - 130	20	
1,1-Dichloropropene	20.0	22.1	110	20.0	23.1	116	4.74	75 - 130	20	
Ethylbenzene	20.0	22.8	114	20.0	23.0	115	0.547	80 - 122	20	

LCS_LCS2 - Modified 03/06/2008
PDF File ID: 1244537
Report generated: 11/20/2008 10:25

Microbac®

Microbac Laboratories Inc.
LABORATORY CONTROL SAMPLE (LCS)

00078245

Login Number: L08100867 Analyst: WTD Prep Method: 5030B
Instrument ID: HPMS14 Matrix: Water Method: 8260B
Workgroup (AAB#): WG287499 Units: ug/L
QC Key: STD Lot #: STD29761

Sample ID: WG287499-02 LCS File ID: 14M09758 Run Date: 11/11/2008 11:27
Sample ID: WG287499-03 LCS2 File ID: 14M09759 Run Date: 11/11/2008 11:58

Analytes	LCS			LCS2			%RPD	%Rec Limits	RPD Lmt	Q
	Known	Found	% REC	Known	Found	% REC				
2-Hexanone	20.0	19.5	97.4	20.0	20.6	103	5.53	55 - 130	20	
Hexachlorobutadiene	20.0	20.5	102	20.0	21.7	109	5.94	72 - 132	20	
Isopropylbenzene	20.0	20.2	101	20.0	20.4	102	0.761	80 - 122	20	
p-Isopropyltoluene	20.0	21.5	107	20.0	21.5	108	0.139	80 - 122	20	
4-Methyl-2-pentanone	20.0	18.6	92.8	20.0	19.5	97.7	5.06	64 - 140	20	
Methylene chloride	20.0	20.1	100	20.0	20.8	104	3.46	80 - 123	20	
Naphthalene	20.0	25.5	127	20.0	26.6	133	4.35	59 - 149	20	
n-Propylbenzene	20.0	22.5	112	20.0	22.5	113	0.328	80 - 129	20	
Styrene	20.0	21.6	108	20.0	22.2	111	2.77	80 - 123	20	
1,1,1,2-Tetrachloroethane	20.0	24.3	121	20.0	24.6	123	1.24	80 - 130	20	
1,1,2,2-Tetrachloroethane	20.0	20.9	104	20.0	21.6	108	3.46	79 - 125	20	
Tetrachloroethene	20.0	21.3	107	20.0	21.7	109	1.71	80 - 124	20	
Toluene	20.0	20.9	104	20.0	21.1	105	0.959	80 - 124	20	
1,2,3-Trichlorobenzene	20.0	23.3	117	20.0	23.8	119	1.79	55 - 140	20	
1,2,4-Trichlorobenzene	20.0	23.2	116	20.0	23.6	118	1.56	65 - 135	20	
1,1,1-Trichloroethane	20.0	24.7	124	20.0	25.3	126	2.31	80 - 134	20	
1,1,2-Trichloroethane	20.0	21.7	109	20.0	22.9	114	5.29	80 - 125	20	
Trichloroethene	20.0	20.5	103	20.0	21.1	105	2.71	80 - 122	20	
Trichlorofluoromethane	25.0	28.2	113	25.0	28.2	113	0.0550	62 - 151	20	
1,2,3-Trichloropropane	20.0	21.3	107	20.0	21.8	109	2.44	75 - 125	20	
1,2,4-Trimethylbenzene	20.0	24.3	121	20.0	23.7	118	2.36	80 - 125	20	
1,3,5-Trimethylbenzene	20.0	23.8	119	20.0	23.7	119	0.214	80 - 127	20	
Vinyl acetate	20.0	26.9	134	20.0	27.9	140	3.87	10 - 150	20	
Vinyl chloride	25.0	31.5	126	25.0	30.5	122	3.13	65 - 140	20	
o-Xylene	20.0	22.5	112	20.0	22.8	114	1.46	80 - 122	20	
m-,p-Xylene	40.0	46.4	116	40.0	47.3	118	1.82	80 - 122	20	

Surogates	LCS	LCS2	Surrogate Limits	Qualifier
	% Recovery	% Recovery		
1,2-Dichloroethane-d4	110	109	80 - 120	PASS
Dibromofluoromethane	104	105	86 - 118	PASS
4-Bromofluorobenzene	98.8	98.0	86 - 115	PASS
Toluene-d8	101	101	88 - 110	PASS

* FAILS %REC LIMIT

\# FAILS RPD LIMIT

LCS_LCS2 - Modified 03/06/2008
PDF File ID: 1244537
Report generated: 11/20/2008 10:25

Microbac®

Microbac Laboratories Inc.
LABORATORY CONTROL SAMPLE (LCS)

00078246

Login Number: L08100867 Analyst: WTD Prep Method: 5030B
Instrument ID: HPMS14 Matrix: Water Method: 8260B
Workgroup (AAB#): WG287499 Units: ug/L
QC Key: STD Lot #: STD29761

Sample ID: WG287499-04 LCS File ID: 14M09760 Run Date: 11/11/2008 12:30
Sample ID: WG287499-05 LCS2 File ID: 14M09761 Run Date: 11/11/2008 13:01

Analytes	LCS			LCS2			%RPD	%Rec Limits	RPD Lmt	Q
	Known	Found	% REC	Known	Found	% REC				
Acetone		3.21			2.98		7.15	40 - 142	20	*
Benzene		0.00	0.00		0.00	0.00	NA	80 - 121	20	*#
Bromobenzene		0.00	0.00		0.00	0.00	NA	80 - 120	20	*#
Bromochloromethane		0.00	0.00		0.00	0.00	NA	65 - 130	20	*#
Bromodichloromethane		0.00	0.00		0.00	0.00	NA	80 - 131	20	*#
Bromoform		0.00	0.00		0.00	0.00	NA	70 - 130	20	*#
Bromomethane		4.26			3.51		19.5	30 - 145	20	*
2-Butanone		1.55			0.00	0.00	0.00	30 - 150	20	*
n-Butylbenzene		0.00	0.00		0.00	0.00	NA	80 - 131	20	*#
sec-Butylbenzene		0.00	0.00		0.00	0.00	NA	80 - 127	20	*#
tert-Butylbenzene		0.00	0.00		0.00	0.00	NA	80 - 126	20	*#
Carbon disulfide		0.00	0.00		0.00	0.00	NA	58 - 138	20	*#
Carbon tetrachloride		0.00	0.00		0.00	0.00	NA	65 - 140	20	*#
Chlorobenzene		0.00	0.00		0.00	0.00	NA	80 - 120	20	*#
Chlorodibromomethane		0.00	0.00		0.00	0.00	NA	60 - 135	20	*#
Chloroethane		0.00	0.00		0.00	0.00	NA	60 - 135	20	*#
2-Chloroethyl vinyl ether		0.00	0.00		0.00	0.00	NA	58 - 151	20	*#
Chloroform		0.00	0.00		0.00	0.00	NA	80 - 125	20	*#
Chloromethane		1.08			0.00	0.00	0.00	40 - 125	20	*
2-Chlorotoluene		0.00	0.00		0.00	0.00	NA	80 - 127	20	*#
4-Chlorotoluene		0.00	0.00		0.00	0.00	NA	80 - 126	20	*#
1,2-Dibromo-3-chloropropane		0.00	0.00		0.00	0.00	NA	50 - 130	20	*#
1,2-Dibromoethane		0.00	0.00		0.00	0.00	NA	80 - 125	20	*#
Dibromomethane		0.00	0.00		0.00	0.00	NA	75 - 125	20	*#
1,2-Dichlorobenzene		0.00	0.00		0.00	0.00	NA	80 - 125	20	*#
1,3-Dichlorobenzene		0.00	0.00		0.00	0.00	NA	80 - 120	20	*#
1,4-Dichlorobenzene		0.00	0.00		0.00	0.00	NA	80 - 120	20	*#
Dichlorodifluoromethane		0.00	0.00		0.00	0.00	NA	50 - 133	20	*#
1,1-Dichloroethane		2.97			3.06		3.08	80 - 125	20	*
1,2-Dichloroethane		0.00	0.00		0.00	0.00	NA	80 - 129	20	*#
1,1-Dichloroethene		0.00	0.00		0.00	0.00	NA	80 - 132	20	*#
cis-1,2-Dichloroethene		0.00	0.00		0.00	0.00	NA	70 - 125	20	*#
trans-1,2-Dichloroethene		0.00	0.00		0.00	0.00	NA	80 - 127	20	*#
1,2-Dichloropropane		0.00	0.00		0.00	0.00	NA	80 - 120	20	*#
1,3-Dichloropropane		0.00	0.00		0.00	0.00	NA	80 - 120	20	*#
2,2-Dichloropropane		0.00	0.00		0.00	0.00	NA	80 - 133	20	*#
cis-1,3-Dichloropropene		0.00	0.00		0.00	0.00	NA	70 - 130	20	*#
trans-1,3-Dichloropropene		0.00	0.00		0.00	0.00	NA	80 - 130	20	*#
1,1-Dichloropropene		0.00	0.00		0.00	0.00	NA	75 - 130	20	*#
Ethylbenzene		0.00	0.00		0.00	0.00	NA	80 - 122	20	*#

LCS_LCS2 - Modified 03/06/2008
PDF File ID: 1244537
Report generated: 11/20/2008 10:25

Microbac®

Microbac Laboratories Inc.
LABORATORY CONTROL SAMPLE (LCS)

00078247

Login Number: L08100867 Analyst: WTD Prep Method: 5030B
Instrument ID: HPMS14 Matrix: Water Method: 8260B
Workgroup (AAB#): WG287499 Units: ug/L
QC Key: STD Lot #: STD29761

Sample ID: WG287499-04 LCS File ID: 14M09760 Run Date: 11/11/2008 12:30
Sample ID: WG287499-05 LCS2 File ID: 14M09761 Run Date: 11/11/2008 13:01

Analytes	LCS			LCS2			%RPD	%Rec Limits	RPD Lmt	Q
	Known	Found	% REC	Known	Found	% REC				
2-Hexanone		0.00	0.00		0.00	0.00	NA	55 - 130	20	*#
Hexachlorobutadiene		0.00	0.00		0.00	0.00	NA	72 - 132	20	*#
Isopropylbenzene		0.00	0.00		0.00	0.00	NA	80 - 122	20	*#
p-Isopropyltoluene		0.00	0.00		0.00	0.00	NA	80 - 122	20	*#
4-Methyl-2-pentanone		0.00	0.00		0.00	0.00	NA	64 - 140	20	*#
Methylene chloride		0.00	0.00		0.00	0.00	NA	80 - 123	20	*#
Naphthalene		0.00	0.00		0.00	0.00	NA	59 - 149	20	*#
n-Propylbenzene		0.00	0.00		0.00	0.00	NA	80 - 129	20	*#
Styrene		0.00	0.00		0.00	0.00	NA	80 - 123	20	*#
1,1,1,2-Tetrachloroethane		0.00	0.00		0.00	0.00	NA	80 - 130	20	*#
1,1,2,2-Tetrachloroethane		1.27			1.77		32.7	79 - 125	20	*#
Tetrachloroethene		0.00	0.00		0.00	0.00	NA	80 - 124	20	*#
Toluene		0.00	0.00		0.00	0.00	NA	80 - 124	20	*#
1,2,3-Trichlorobenzene		0.00	0.00		0.00	0.00	NA	55 - 140	20	*#
1,2,4-Trichlorobenzene		0.00	0.00		0.00	0.00	NA	65 - 135	20	*#
1,1,1-Trichloroethane		0.00	0.00		0.00	0.00	NA	80 - 134	20	*#
1,1,2-Trichloroethane		0.00	0.00		0.00	0.00	NA	80 - 125	20	*#
Trichloroethene		0.00	0.00		0.00	0.00	NA	80 - 122	20	*#
Trichlorofluoromethane		0.00	0.00		0.00	0.00	NA	62 - 151	20	*#
1,2,3-Trichloropropane		0.00	0.00		0.00	0.00	NA	75 - 125	20	*#
1,2,4-Trimethylbenzene		0.00	0.00		0.00	0.00	NA	80 - 125	20	*#
1,3,5-Trimethylbenzene		0.00	0.00		0.00	0.00	NA	80 - 127	20	*#
Vinyl acetate		0.00	0.00		0.00	0.00	NA	10 - 150	20	*#
Vinyl chloride		0.00	0.00		0.00	0.00	NA	65 - 140	20	*#
o-Xylene		0.00	0.00		0.00	0.00	NA	80 - 122	20	*#
m-,p-Xylene		0.00	0.00		0.00	0.00	NA	80 - 122	20	*#

Surogates	LCS	LCS2	Surrogate Limits	Qualifier
	% Recovery	% Recovery		
1,2-Dichloroethane-d4	105	107	80 - 120	PASS
Dibromofluoromethane	101	101	86 - 118	PASS
4-Bromofluorobenzene	107	108	86 - 115	PASS
Toluene-d8	101	102	88 - 110	PASS

* FAILS %REC LIMIT

\# FAILS RPD LIMIT

LCS_LCS2 - Modified 03/06/2008
PDF File ID: 1244537
Report generated: 11/20/2008 10:25

Microbac®

Microbac Laboratories Inc.
LABORATORY CONTROL SAMPLE (LCS)

00078248

Login Number: L08100867 Analyst: WTD Prep Method: 5030B
Instrument ID: HPMS11 Matrix: Water Method: 8260B
Workgroup (AAB#): WG286975 Units: ug/L
QC Key: STD Lot #: STD29544

Sample ID: WG286975-02 LCS File ID: 11M54983 Run Date: 11/05/2008 11:17
Sample ID: WG286975-03 LCS2 File ID: 11M54984 Run Date: 11/05/2008 11:49

Analytes	LCS			LCS2			%RPD	%Rec Limits	RPD Lmt	Q
	Known	Found	% REC	Known	Found	% REC				
Acetone	20.0	18.8	93.9	20.0	19.6	97.8	4.07	40 - 142	20	
Benzene	20.0	20.3	101	20.0	19.7	98.5	2.82	80 - 121	20	
Bromobenzene	20.0	20.7	104	20.0	20.5	103	0.929	80 - 120	20	
Bromochloromethane	20.0	22.4	112	20.0	21.9	109	2.25	65 - 130	20	
Bromodichloromethane	20.0	21.8	109	20.0	21.8	109	0.157	80 - 131	20	
Bromoform	20.0	16.5	82.4	20.0	17.9	89.4	8.11	70 - 130	20	
Bromomethane	20.0	19.6	98.0	20.0	20.6	103	5.12	30 - 145	20	
2-Butanone	20.0	20.4	102	20.0	22.6	113	10.1	30 - 150	20	
n-Butylbenzene	20.0	21.3	107	20.0	20.4	102	4.47	80 - 131	20	
sec-Butylbenzene	20.0	22.1	110	20.0	21.3	107	3.45	80 - 127	20	
tert-Butylbenzene	20.0	21.5	107	20.0	20.9	105	2.77	80 - 126	20	
Carbon disulfide	20.0	20.1	100	20.0	19.3	96.7	3.77	58 - 138	20	
Carbon tetrachloride	20.0	20.9	104	20.0	19.5	97.6	6.61	65 - 140	20	
Chlorobenzene	20.0	20.5	103	20.0	20.1	100	2.34	80 - 120	20	
Chlorodibromomethane	20.0	17.7	88.5	20.0	17.9	89.7	1.28	60 - 135	20	
Chloroethane	20.0	22.1	110	20.0	20.8	104	5.94	60 - 135	20	
2-Chloroethyl vinyl ether	20.0	15.8	79.1	20.0	16.2	81.2	2.63	58 - 151	20	
Chloroform	20.0	21.5	107	20.0	21.0	105	2.36	80 - 125	20	
Chloromethane	20.0	14.0	70.0	20.0	14.0	70.0	0.0623	40 - 125	20	
2-Chlorotoluene	20.0	22.5	112	20.0	21.5	107	4.57	80 - 127	20	
4-Chlorotoluene	20.0	18.6	92.9	20.0	18.3	91.5	1.47	80 - 126	20	
1,2-Dibromo-3-chloropropane	20.0	16.9	84.6	20.0	18.6	93.0	9.35	50 - 130	20	
1,2-Dibromoethane	20.0	20.6	103	20.0	20.9	104	1.26	80 - 125	20	
Dibromomethane	20.0	20.6	103	20.0	21.6	108	4.99	75 - 125	20	
1,2-Dichlorobenzene	20.0	20.7	104	20.0	20.6	103	0.336	80 - 125	20	
1,3-Dichlorobenzene	20.0	20.8	104	20.0	20.5	103	1.24	80 - 120	20	
1,4-Dichlorobenzene	20.0	20.1	100	20.0	19.7	98.7	1.72	80 - 120	20	
Dichlorodifluoromethane	20.0	19.8	99.2	20.0	18.6	92.8	6.67	50 - 133	20	
1,1-Dichloroethane	20.0	20.5	102	20.0	20.0	100	2.45	80 - 125	20	
1,2-Dichloroethane	20.0	20.4	102	20.0	20.5	103	0.602	80 - 129	20	
1,1-Dichloroethene	20.0	21.2	106	20.0	20.5	103	3.29	80 - 132	20	
cis-1,2-Dichloroethene	20.0	21.3	107	20.0	21.2	106	0.672	70 - 125	20	
trans-1,2-Dichloroethene	20.0	20.6	103	20.0	19.6	98.2	4.49	80 - 127	20	
1,2-Dichloropropane	20.0	20.6	103	20.0	20.1	101	2.61	80 - 120	20	
1,3-Dichloropropane	20.0	19.9	99.6	20.0	20.4	102	2.54	80 - 120	20	
2,2-Dichloropropane	20.0	17.6	87.9	20.0	16.7	83.6	5.08	80 - 133	20	
cis-1,3-Dichloropropene	20.0	18.5	92.6	20.0	18.3	91.3	1.42	70 - 130	20	
trans-1,3-Dichloropropene	20.0	11.5	57.5	20.0	11.6	58.2	1.28	80 - 130	20	*
1,1-Dichloropropene	20.0	20.7	103	20.0	20.0	99.8	3.52	75 - 130	20	
Ethylbenzene	20.0	21.4	107	20.0	20.6	103	4.21	80 - 122	20	

LCS_LCS2 - Modified 03/06/2008
PDF File ID: 1244537
Report generated: 11/20/2008 10:25

Microbac®

Microbac Laboratories Inc.
LABORATORY CONTROL SAMPLE (LCS)

00078249

Login Number: L08100867 Analyst: WTD Prep Method: 5030B
Instrument ID: HPMS11 Matrix: Water Method: 8260B
Workgroup (AAB#): WG286975 Units: ug/L
QC Key: STD Lot #: STD29544

Sample ID: WG286975-02 LCS File ID: 11M54983 Run Date: 11/05/2008 11:17
Sample ID: WG286975-03 LCS2 File ID: 11M54984 Run Date: 11/05/2008 11:49

Analytes	LCS			LCS2			%RPD	%Rec Limits	RPD Lmt	Q
	Known	Found	% REC	Known	Found	% REC				
2-Hexanone	20.0	20.5	102	20.0	21.8	109	6.45	55 - 130	20	
Hexachlorobutadiene	20.0	21.7	108	20.0	20.5	103	5.43	72 - 132	20	
Isopropylbenzene	20.0	19.7	98.4	20.0	19.0	95.0	3.50	80 - 122	20	
p-Isopropyltoluene	20.0	21.5	107	20.0	20.5	103	4.42	80 - 122	20	
4-Methyl-2-pentanone	20.0	21.1	106	20.0	22.5	113	6.52	64 - 140	20	
Methylene chloride	20.0	20.9	105	20.0	20.2	101	3.45	80 - 123	20	
Naphthalene	20.0	20.7	103	20.0	21.5	108	4.01	59 - 149	20	
n-Propylbenzene	20.0	21.2	106	20.0	20.4	102	4.12	80 - 129	20	
Styrene	20.0	21.9	110	20.0	21.6	108	1.50	80 - 123	20	
1,1,1,2-Tetrachloroethane	20.0	19.6	98.2	20.0	19.9	99.3	1.14	80 - 130	20	
1,1,2,2-Tetrachloroethane	20.0	22.1	110	20.0	23.1	115	4.37	79 - 125	20	
Tetrachloroethene	20.0	21.0	105	20.0	20.5	103	2.32	80 - 124	20	
Toluene	20.0	20.2	101	20.0	19.6	98.1	2.82	80 - 124	20	
1,2,3-Trichlorobenzene	20.0	20.4	102	20.0	20.7	103	1.32	55 - 140	20	
1,2,4-Trichlorobenzene	20.0	20.4	102	20.0	20.4	102	0.303	65 - 135	20	
1,1,1-Trichloroethane	20.0	20.4	102	20.0	19.6	97.8	4.38	80 - 134	20	
1,1,2-Trichloroethane	20.0	21.1	105	20.0	21.6	108	2.24	80 - 125	20	
Trichloroethene	20.0	19.9	99.5	20.0	19.1	95.4	4.21	80 - 122	20	
Trichlorofluoromethane	20.0	22.4	112	20.0	21.2	106	5.64	62 - 151	20	
1,2,3-Trichloropropane	20.0	21.2	106	20.0	21.9	109	3.14	75 - 125	20	
1,2,4-Trimethylbenzene	20.0	21.5	107	20.0	20.8	104	3.18	80 - 125	20	
1,3,5-Trimethylbenzene	20.0	21.5	108	20.0	20.5	103	4.84	80 - 127	20	
Vinyl acetate	20.0	39.0	195	20.0	40.6	203	4.12	10 - 150	20	*
Vinyl chloride	20.0	22.2	111	20.0	21.0	105	5.41	65 - 140	20	
o-Xylene	20.0	21.4	107	20.0	21.0	105	2.07	80 - 122	20	
m-,p-Xylene	40.0	42.3	106	40.0	41.1	103	3.03	80 - 122	20	

Surogates	LCS	LCS2	Surrogate Limits	Qualifier
	% Recovery	% Recovery		
1,2-Dichloroethane-d4	81.5	84.0	80 - 120	PASS
Dibromofluoromethane	91.8	93.7	86 - 118	PASS
4-Bromofluorobenzene	91.9	92.2	86 - 115	PASS
Toluene-d8	86.9	86.7	88 - 110	FAIL

* FAILS %REC LIMIT

\# FAILS RPD LIMIT

LCS_LCS2 - Modified 03/06/2008
PDF File ID: 1244537
Report generated: 11/20/2008 10:25

Microbac®

Microbac Laboratories Inc.

MS/MSD REPORT

00078250

Loginnum: L08100867 Cal ID: HPMS6- 28-OCT-08 Worknum: WG287207

Instrument ID: HPMS6 Contract #: DACA56-94-D-0020 Prep Method: 5030B

Parent ID: L08100867-01 File ID: 6M79567 Dil: 1 Method: 8260B

Sample ID: L08100867-02 MS File ID: 6M79568 Dil: 1 Matrix: Water

Sample ID: L08100867-03 MSD File ID: 6M79569 Dil: 1 Units: ug/L

Analyte	Parent	MS Spiked	MS Found	MS %Rec	MSD Spiked	MSD Found	MSD %Rec	%RPD	%Rec Limits	RPD Limit	Q
Acetone	ND	20.0	26.9	135	20.0	29.4	147	8.88	40 - 142	20	*
Benzene	ND	20.0	20.9	104	20.0	20.9	105	0.219	80 - 121	20	
Bromobenzene	ND	20.0	20.4	102	20.0	20.7	104	1.68	80 - 120	20	
Bromochloromethane	ND	20.0	24.9	124	20.0	24.7	124	0.474	65 - 130	20	
Bromodichloromethane	ND	20.0	28.1	140	20.0	28.1	141	0.0688	80 - 131	20	*
Bromoform	ND	20.0	22.1	110	20.0	22.2	111	0.277	70 - 130	20	
Bromomethane	ND	20.0	17.1	85.4	20.0	18.9	94.3	9.88	30 - 145	20	
2-Butanone	ND	20.0	17.9	89.3	20.0	20.4	102	13.4	30 - 150	20	
n-Butylbenzene	ND	20.0	20.3	102	20.0	20.9	105	2.69	80 - 131	20	
sec-Butylbenzene	ND	20.0	20.0	100	20.0	20.3	102	1.36	80 - 127	20	
tert-Butylbenzene	ND	20.0	18.9	94.6	20.0	19.6	97.9	3.33	80 - 126	20	
Carbon disulfide	ND	20.0	8.00	40	20.0	7.74	38.7	3.31	58 - 138	20	*
Carbon tetrachloride	ND	20.0	21.6	108	20.0	19.2	96.1	11.9	65 - 140	20	
Chlorobenzene	ND	20.0	21.1	106	20.0	21.5	107	1.60	80 - 120	20	
Chlorodibromomethane	ND	20.0	22.8	114	20.0	23.0	115	1.27	60 - 135	20	
Chloroethane	ND	20.0	23.8	119	20.0	25.5	128	6.95	60 - 135	20	
2-Chloroethyl vinyl ether	ND	20.0	0	0	20.0	0	0	NA	58 - 151	20	*#
Chloroform	ND	20.0	25.3	126	20.0	24.8	124	1.91	80 - 125	20	*
Chloromethane	ND	20.0	22.7	113	20.0	23.4	117	3.12	40 - 125	20	
2-Chlorotoluene	ND	20.0	20.5	102	20.0	20.4	102	0.292	80 - 127	20	
4-Chlorotoluene	ND	20.0	21.3	106	20.0	21.7	108	1.81	80 - 126	20	
1,2-Dibromo-3-chloropropane	ND	20.0	19.7	98.5	20.0	20.5	103	4.02	50 - 130	20	
1,2-Dibromoethane	ND	20.0	23.0	115	20.0	22.8	114	0.838	80 - 125	20	
Dibromomethane	ND	20.0	27.6	138	20.0	28.4	142	2.72	75 - 125	20	*
1,2-Dichlorobenzene	ND	20.0	21.4	107	20.0	22.1	111	3.34	80 - 125	20	
1,3-Dichlorobenzene	ND	20.0	21.0	105	20.0	21.5	107	2.00	80 - 120	20	
1,4-Dichlorobenzene	ND	20.0	20.3	102	20.0	20.5	103	1.09	80 - 120	20	
Dichlorodifluoromethane	ND	20.0	28.7	144	20.0	28.3	141	1.73	50 - 133	20	*
1,1-Dichloroethane	ND	20.0	22.9	114	20.0	21.7	109	5.21	80 - 125	20	
1,2-Dichloroethane	ND	20.0	26.5	133	20.0	25.5	128	3.86	80 - 129	20	*
1,1-Dichloroethene	ND	20.0	22.6	113	20.0	21.3	107	5.70	80 - 132	20	
cis-1,2-Dichloroethene	ND	20.0	22.6	113	20.0	22.3	112	1.13	70 - 125	20	
trans-1,2-Dichloroethene	ND	20.0	20.5	102	20.0	19.1	95.5	6.92	80 - 127	20	
1,2-Dichloropropane	ND	20.0	21.4	107	20.0	21.4	107	0.116	80 - 120	20	
1,3-Dichloropropane	ND	20.0	22.2	111	20.0	22.5	112	1.41	80 - 120	20	
2,2-Dichloropropane	ND	20.0	17.7	88.5	20.0	16.6	83	6.39	80 - 133	20	
cis-1,3-Dichloropropene	ND	20.0	22.1	110	20.0	22.2	111	0.561	70 - 130	20	
trans-1,3-Dichloropropene	ND	20.0	19.5	97.4	20.0	19.4	96.8	0.592	80 - 130	20	
1,1-Dichloropropene	ND	20.0	19.1	95.5	20.0	18.3	91.4	4.36	75 - 130	20	
Ethylbenzene	ND	20.0	21.6	108	20.0	21.1	106	2.08	80 - 122	20	
2-Hexanone	ND	20.0	21.9	110	20.0	23.5	117	6.95	55 - 130	20	

MS_MSD - Modified 03/06/2008
PDF File ID: 1248283
Report generated 11/20/2008 10:12

Microbac®

Microbac Laboratories Inc.

MS/MSD REPORT

00078251

Loginnum: L08100867 Cal ID: HPMS6 28-OCT-08 Worknum: WG287207

Instrument ID: HPMS6 Contract #: DACA56-94-D-0020 Prep Method: 5030B

Parent ID: L08100867-01 File ID: 6M79567 Dil: 1 Method: 8260B

Sample ID: L08100867-02 MS File ID: 6M79568 Dil: 1 Matrix: Water

Sample ID: L08100867-03 MSD File ID: 6M79569 Dil: 1 Units: ug/L

Analyte	Parent	MS Spiked	MS Found	MS %Rec	MSD Spiked	MSD Found	MSD %Rec	%RPD	%Rec Limits	RPD Limit	Q
Hexachlorobutadiene	ND	20.0	19.0	95	20.0	19.1	95.4	0.372	72 - 132	20	
Isopropylbenzene	ND	20.0	17.1	85.6	20.0	17.3	86.7	1.25	80 - 122	20	
p-Isopropyltoluene	ND	20.0	20.1	100	20.0	20.5	102	1.89	80 - 122	20	
4-Methyl-2-pentanone	ND	20.0	20.5	102	20.0	22.5	113	9.58	64 - 140	20	
Methylene chloride	ND	20.0	21.6	108	20.0	22.3	111	3.24	80 - 123	20	
Naphthalene	ND	20.0	17.1	85.6	20.0	18.4	91.9	7.15	59 - 149	20	
n-Propylbenzene	ND	20.0	17.6	88.2	20.0	18.2	91.1	3.19	80 - 129	20	
Styrene	ND	20.0	19.5	97.4	20.0	19.3	96.5	0.983	80 - 123	20	
1,1,1,2-Tetrachloroethane	ND	20.0	22.8	114	20.0	22.4	112	2.02	80 - 130	20	
1,1,2,2-Tetrachloroethane	ND	20.0	19.2	96	20.0	19.9	99.5	3.65	79 - 125	20	
Tetrachloroethene	ND	20.0	20.4	102	20.0	20.1	100	1.54	80 - 124	20	
Toluene	ND	20.0	20.5	102	20.0	20.4	102	0.325	80 - 124	20	
1,2,3-Trichlorobenzene	ND	20.0	15.7	78.6	20.0	17.2	85.8	8.84	55 - 140	20	
1,2,4-Trichlorobenzene	ND	20.0	17.9	89.6	20.0	18.7	93.4	4.19	65 - 135	20	
1,1,1-Trichloroethane	ND	20.0	22.4	112	20.0	21.0	105	6.44	80 - 134	20	
1,1,2-Trichloroethane	ND	20.0	22.7	114	20.0	22.6	113	0.707	80 - 125	20	
Trichloroethene	ND	20.0	22.3	112	20.0	22.0	110	1.63	80 - 122	20	
Trichlorofluoromethane	ND	20.0	24.4	122	20.0	22.0	110	10.3	62 - 151	20	
1,2,3-Trichloropropane	ND	20.0	19.4	96.9	20.0	21.5	108	10.5	75 - 125	20	
1,2,4-Trimethylbenzene	ND	20.0	21.7	108	20.0	21.9	110	1.02	80 - 125	20	
1,3,5-Trimethylbenzene	ND	20.0	18.0	89.9	20.0	18.5	92.5	2.88	80 - 127	20	
Vinyl acetate	ND	20.0	15.3	76.7	20.0	13.5	67.5	12.7	10 - 150	20	
Vinyl chloride	ND	20.0	40.5	202	20.0	36.6	183	10.2	65 - 140	20	*
o-Xylene	ND	20.0	22.3	111	20.0	22.0	110	1.33	80 - 122	20	
m-,p-Xylene	ND	40.0	46.1	115	40.0	45.4	114	1.43	80 - 122	20	

* FAILS %REC LIMIT

\# FAILS RPD LIMIT

MS_MSD - Modified 03/06/2008
PDF File ID: 1248283
Report generated 11/20/2008 10:12

Microbac®

Microbac Laboratories Inc.
ORGANIC INSTRUMENT CHECK

00078252

BFB

Login Number: L08100867
Instrument: HPMS11
Analyst: WTD
Workgroup: WG286813

Tune ID: WG286813-01
Run Date: 11/03/2008
Run Time: 14:59
File ID: 11M54910
Cal ID: HPMS11 -

Target Mass	Rel. to Mass	Lower Limit%	Upper Limit%	Rel. Abn%	Raw Abn	Result Pass/Fail
50.0	95.0	15.0	40.0	21.2	9503	PASS
75.0	95.0	30.0	60.0	50.8	22771	PASS
95.0	95.0	100	100	100	44789	PASS
96.0	95.0	5.00	9.00	6.56	2938	PASS
173	174	0	2.00	0	0	PASS
174	95.0	50.0	100	68.4	30624	PASS
175	174	5.00	9.00	7.74	2369	PASS
176	174	95.0	101	95.2	29168	PASS
177	176	5.00	9.00	6.66	1942	PASS

This check relates to the following samples:

Lab ID	Client ID	Tag	Date Analyzed	Q
WG286813-02	STD	01	11/03/2008 15:26	
WG286813-03	STD	01	11/03/2008 16:07	
WG286813-04	STD	01	11/03/2008 16:39	
WG286813-05	STD	01	11/03/2008 17:11	
WG286813-06	STD	01	11/03/2008 17:42	
WG286813-07	STD	01	11/03/2008 18:14	
WG286813-08	STD-CCV	01	11/03/2008 18:46	
WG286813-09	STD	01	11/03/2008 19:18	
WG286813-10	STD	01	11/03/2008 19:50	
WG286813-11	STD	01	11/03/2008 20:21	
WG286813-12	SSCV	01	11/03/2008 21:57	

* Sample past 12 hour tune limit

TUNE - Modified 03/06/2008
PDF File ID: 1251124
Report generated 11/20/2008 10:12

Microbac®

Microbac Laboratories Inc.
ORGANIC INSTRUMENT CHECK

00078253

BFB

Login Number: L08100867
Instrument: HPMS11
Analyst: WTD
Workgroup: WG286973

Tune ID: WG286973-01
Run Date: 11/05/2008
Run Time: 09:14
File ID: 11M54979
Cal ID: HPMS11 - 03-NOV-08

Target Mass	Rel. to Mass	Lower Limit%	Upper Limit%	Rel. Abn%	Raw Abn	Result Pass/Fail
50.0	95.0	15.0	40.0	20.4	9236	PASS
75.0	95.0	30.0	60.0	48.5	22018	PASS
95.0	95.0	100	100	100	45373	PASS
96.0	95.0	5.00	9.00	6.38	2895	PASS
173	174	0	2.00	0	0	PASS
174	95.0	50.0	100	72.2	32768	PASS
175	174	5.00	9.00	7.89	2584	PASS
176	174	95.0	101	100	32789	PASS
177	176	5.00	9.00	6.00	1968	PASS

This check relates to the following samples:

Lab ID	Client ID	Tag	Date Analyzed	Q
WG286973-02	CCV	01	11/05/2008 09:41	
WG286975-01	BLANK	01	11/05/2008 10:45	
WG286975-02	LCS	01	11/05/2008 11:17	
WG286975-03	LCS2	01	11/05/2008 11:49	
L08100867-08	LHSMW20-102708	01	11/05/2008 16:37	
L08100867-09	LHSMW15-102708	01	11/05/2008 17:09	

* Sample past 12 hour tune limit

TUNE - Modified 03/06/2008
PDF File ID: 1251124
Report generated 11/20/2008 10:12

Microbac®

Microbac Laboratories Inc.
ORGANIC INSTRUMENT CHECK

00078254

BFB

Login Number: L08100867
Instrument: HPMS11
Analyst: WTD
Workgroup: WG287053

Tune ID: WG287053-01
Run Date: 11/05/2008
Run Time: 20:21
File ID: 11M55000
Cal ID: HPMS11 - 03-NOV-08

Target Mass	Rel. to Mass	Lower Limit%	Upper Limit%	Rel. Abn%	Raw Abn	Result Pass/Fail
50.0	95.0	15.0	40.0	20.5	8908	PASS
75.0	95.0	30.0	60.0	52.2	22730	PASS
95.0	95.0	100	100	100	43530	PASS
96.0	95.0	5.00	9.00	7.23	3147	PASS
173	174	0	2.00	0	0	PASS
174	95.0	50.0	100	73.9	32186	PASS
175	174	5.00	9.00	7.24	2331	PASS
176	174	95.0	101	95.6	30773	PASS
177	176	5.00	9.00	6.79	2089	PASS

This check relates to the following samples:

Lab ID	Client ID	Tag	Date Analyzed	Q
WG286813-13	SSCV	01	11/05/2008 21:18	

* Sample past 12 hour tune limit

TUNE - Modified 03/06/2008
PDF File ID: 1251124
Report generated 11/20/2008 10:12

Microbac®

Microbac Laboratories Inc.
ORGANIC INSTRUMENT CHECK

00078255

BFB

Login Number: L08100867
Instrument: HPMS14
Analyst: MDA
Workgroup: WG284610

Tune ID: WG284610-01
Run Date: 10/10/2008
Run Time: 16:05
File ID: 14M08687
Cal ID: HPMS14 - 11-OCT-08

Target Mass	Rel. to Mass	Lower Limit%	Upper Limit%	Rel. Abn%	Raw Abn	Result Pass/Fail
50.0	95.0	15.0	40.0	18.4	1350	PASS
75.0	95.0	30.0	60.0	48.6	3559	PASS
95.0	95.0	100	100	100	7328	PASS
96.0	95.0	5.00	9.00	6.85	502	PASS
173	174	0	2.00	0	0	PASS
174	95.0	50.0	100	82.2	6020	PASS
175	174	5.00	9.00	6.93	417	PASS
176	174	95.0	101	97.5	5867	PASS
177	176	5.00	9.00	6.37	374	PASS

This check relates to the following samples:

Lab ID	Client ID	Tag	Date Analyzed	Q
WG284610-03	STD	01	10/10/2008 17:00	
WG284610-04	STD	01	10/10/2008 17:31	
WG284610-05	STD	01	10/10/2008 18:02	
WG284610-06	STD	01	10/10/2008 18:33	
WG284610-07	STD	01	10/10/2008 19:04	
WG284610-08	STD-CCV	01	10/10/2008 19:35	
WG284610-09	STD	01	10/10/2008 20:06	
WG284610-10	STD	01	10/10/2008 20:37	
WG284610-11	STD	01	10/10/2008 21:08	
WG284610-02	STD	01	10/11/2008 03:19	
WG284610-12	SSCV	01	10/11/2008 03:50	

* Sample past 12 hour tune limit

TUNE - Modified 03/06/2008
PDF File ID: 1251124
Report generated 11/20/2008 10:12

Microbac®

Microbac Laboratories Inc.
ORGANIC INSTRUMENT CHECK

00078256

BFB

Login Number: L08100867
Instrument: HPMS14
Analyst: MDA
Workgroup: WG287339

Tune ID: WG287339-01
Run Date: 11/08/2008
Run Time: 17:56
File ID: 14M09702
Cal ID: HPMS14 - 11-OCT-08

Target Mass	Rel. to Mass	Lower Limit%	Upper Limit%	Rel. Abn%	Raw Abn	Result Pass/Fail
50.0	95.0	15.0	40.0	19.3	2068	PASS
75.0	95.0	30.0	60.0	50.9	5465	PASS
95.0	95.0	100	100	100	10729	PASS
96.0	95.0	5.00	9.00	7.26	779	PASS
173	174	0	2.00	0	0	PASS
174	95.0	50.0	100	75.5	8099	PASS
175	174	5.00	9.00	7.45	603	PASS
176	174	95.0	101	95.1	7705	PASS
177	176	5.00	9.00	7.27	560	PASS

This check relates to the following samples:

Lab ID	Client ID	Tag	Date Analyzed	Q
WG287339-02	CCV	01	11/08/2008 18:20	
WG287340-01	BLANK	01	11/08/2008 19:33	
WG287340-02	LCS	01	11/08/2008 20:04	
WG287340-03	LCS2	01	11/08/2008 20:35	
L08100867-11	29WW16-102808	DL01	11/09/2008 02:16	

* Sample past 12 hour tune limit

TUNE - Modified 03/06/2008
PDF File ID: 1251124
Report generated 11/20/2008 10:12

Microbac®

Microbac Laboratories Inc.
ORGANIC INSTRUMENT CHECK

00078257

BFB

Login Number: L08100867
Instrument: HPMS14
Analyst: WTD
Workgroup: WG287498

Tune ID: WG287498-01
Run Date: 11/11/2008
Run Time: 08:28
File ID: 14M09752
Cal ID: HPMS14 - 11-OCT-08

Target Mass	Rel. to Mass	Lower Limit%	Upper Limit%	Rel. Abn%	Raw Abn	Result Pass/Fail
50.0	95.0	15.0	40.0	22.0	4251	PASS
75.0	95.0	30.0	60.0	51.4	9938	PASS
95.0	95.0	100	100	100	19337	PASS
96.0	95.0	5.00	9.00	6.69	1293	PASS
173	174	0	2.00	0.556	77	PASS
174	95.0	50.0	100	71.7	13861	PASS
175	174	5.00	9.00	7.56	1048	PASS
176	174	95.0	101	95.2	13195	PASS
177	176	5.00	9.00	6.54	863	PASS

This check relates to the following samples:

Lab ID	Client ID	Tag	Date Analyzed	Q
WG287498-02	CCV	01	11/11/2008 09:23	
WG287499-01	BLANK	01	11/11/2008 10:56	
WG287499-02	LCS	01	11/11/2008 11:27	
WG287499-03	LCS2	01	11/11/2008 11:58	
WG287499-04	LCS	01	11/11/2008 12:30	
WG287499-05	LCS2	01	11/11/2008 13:01	
L08100867-11	29WW16-102808	DL02	11/11/2008 19:12	

* Sample past 12 hour tune limit

TUNE - Modified 03/06/2008
PDF File ID: 1251124
Report generated 11/20/2008 10:12

Microbac®

Microbac Laboratories Inc.
ORGANIC INSTRUMENT CHECK

00078258

BFB

Login Number: L08100867
Instrument: HPMS6
Analyst: CAA
Workgroup: WG286204

Tune ID: WG286204-01
Run Date: 10/28/2008
Run Time: 15:16
File ID: 6M79241
Cal ID: HPMS6 -

Target Mass	Rel. to Mass	Lower Limit%	Upper Limit%	Rel. Abn%	Raw Abn	Result Pass/Fail
50.0	95.0	15.0	40.0	26.0	23018	PASS
75.0	95.0	30.0	60.0	47.9	42344	PASS
95.0	95.0	100	100	100	88450	PASS
96.0	95.0	5.00	9.00	6.77	5986	PASS
173	174	0	2.00	0.573	371	PASS
174	95.0	50.0	100	73.2	64704	PASS
175	174	5.00	9.00	7.13	4611	PASS
176	174	95.0	101	97.4	63010	PASS
177	176	5.00	9.00	7.01	4414	PASS

This check relates to the following samples:

Lab ID	Client ID	Tag	Date Analyzed	Q
WG286204-02	STD	01	10/28/2008 16:16	
WG286204-03	STD	01	10/28/2008 16:49	
WG286204-04	STD	01	10/28/2008 17:21	
WG286204-05	STD	01	10/28/2008 17:55	
WG286204-06	STD	01	10/28/2008 18:28	
WG286204-07	STD	01	10/28/2008 19:00	
WG286204-08	STD-CCV	01	10/28/2008 19:33	
WG286204-09	STD	01	10/28/2008 20:07	
WG286204-10	STD	01	10/28/2008 20:40	
WG286204-11	STD	01	10/28/2008 21:12	
WG286204-12	SSCV	01	10/28/2008 22:51	

* Sample past 12 hour tune limit

TUNE - Modified 03/06/2008
PDF File ID: 1251124
Report generated 11/20/2008 10:12

Microbac®

Microbac Laboratories Inc.
ORGANIC INSTRUMENT CHECK

00078259

BFB

Login Number: L08100867
Instrument: HPMS6
Analyst: CAA
Workgroup: WG287206

Tune ID: WG287206-01
Run Date: 11/07/2008
Run Time: 11:30
File ID: 6M79547
Cal ID: HPMS6 - 28-OCT-08

Target Mass	Rel. to Mass	Lower Limit%	Upper Limit%	Rel. Abn%	Raw Abn	Result Pass/Fail
50.0	95.0	15.0	40.0	23.3	43072	PASS
75.0	95.0	30.0	60.0	48.8	90357	PASS
95.0	95.0	100	100	100	185066	PASS
96.0	95.0	5.00	9.00	6.26	11577	PASS
173	174	0	2.00	0.757	1141	PASS
174	95.0	50.0	100	81.4	150634	PASS
175	174	5.00	9.00	6.85	10315	PASS
176	174	95.0	101	96.2	144896	PASS
177	176	5.00	9.00	6.27	9081	PASS

This check relates to the following samples:

Lab ID	Client ID	Tag	Date Analyzed	Q
WG287206-02	CCV	01	11/07/2008 12:00	
WG287207-01	BLANK	01	11/07/2008 13:07	
WG287207-02	LCS	01	11/07/2008 13:39	
L08100867-05	LHSMW23-102808	01	11/07/2008 14:43	
L08100867-06	46WW02-102808	01	11/07/2008 15:15	
WG287207-03	REF	01	11/07/2008 15:47	
WG287207-04	MS	01	11/07/2008 16:18	
WG287207-05	MSD	01	11/07/2008 16:50	
L08100867-04	LHSMW25-102808-QA	01	11/07/2008 21:39	
L08100867-01	LHSMW25-102808	01	11/07/2008 22:11	
WG287207-06	REF	01	11/07/2008 22:11	
L08100867-02	LHSMW25-102808-MS	01	11/07/2008 22:43	
WG287207-07	MS	01	11/07/2008 22:43	
L08100867-03	LHSMW25-102808-MSD	01	11/07/2008 23:16	
WG287207-08	MSD	01	11/07/2008 23:16	

* Sample past 12 hour tune limit

TUNE - Modified 03/06/2008
PDF File ID: 1251124
Report generated 11/20/2008 10:12

Microbac®

Microbac Laboratories Inc.
INITIAL CALIBRATION SUMMARY

00078260

Login Number: L08100867
Analytical Method: 8260B
ICAL Workgroup: WG286813

Instrument ID: HPMS11
Initial Calibration Date: 03-NOV-08 20:21
Column ID: F

Analyte		AVG RF	% RSD	LINEAR (R^2)	QUAD(R^2)
1,1-Dichloroethene	CCC	0.3592	10.3		
1,2-Dichloropropane	CCC	0.1933	7.97		
Chloroform	CCC	0.4021	5.96		
Ethylbenzene	CCC	0.4249	9.21		
Toluene	CCC	1.179	8.92		
Vinyl Chloride	CCC	0.1624	13.3		0.99700
1,1,2,2-Tetrachloroethane	SPCC	0.3538	9.92		
1,1-Dichloroethane	SPCC	0.3958	7.26		
Bromoform	SPCC	0.1252	22.7	0.99800	
Chlorobenzene	SPCC	0.7854	8.71		
Chloromethane	SPCC	0.1298	7.23		
1,1,1,2-Tetrachloroethane		0.2584	7.65		
1,1,1-Trichloroethane		0.3796	9.53		
1,1,2-Trichloroethane		0.1878	7.91		
1,1-Dichloropropene		0.3010	7.97		
1,2,3-Trichlorobenzene		0.6716	6.78		
1,2,3-Trichloropropane		0.1347	6.00		
1,2,4-Trichlorobenzene		0.7802	6.58		
1,2,4-Trimethylbenzene		2.121	7.46		
1,2-Dibromo-3-Chloropropane		0.07348	15.3	0.99500	
1,2-Dibromoethane		0.1944	7.90		
1,2-Dichlorobenzene		1.088	7.72		
1,2-Dichloroethane		0.3095	7.53		
1,3,5-Trimethylbenzene		2.066	8.83		
1,3-Dichlorobenzene		1.177	6.51		
1,3-Dichloropropane		0.3538	7.47		
1,4-Dichlorobenzene		1.247	9.73		
2,2-Dichloropropane		0.3362	11.0		
2-Butanone		0.05262	7.74		
2-Chloroethyl Vinyl Ether		0.07633	12.8		
2-Chlorotoluene		1.931	14.3		
2-Hexanone		0.1018	10.3		
4-Chlorotoluene		1.837	8.43		
4-Methyl-2-Pentanone		0.05008	9.39		
Acetone		0.03985	16.9	0.99600	
Benzene		0.8430	7.79		
Bromobenzene		0.6044	6.28		
Bromochloromethane		0.1237	10.0		
Bromodichloromethane		0.2806	8.50		
Bromomethane		0.09824	13.7		
Carbon Disulfide		0.5774	15.7	0.99900	
Carbon Tetrachloride		0.2975	11.3		
Chloroethane		0.1262	15.3	0.99100	
Dibromochloromethane		0.2371	15.8	0.99800	
Dibromomethane		0.1052	10.1		

INT_CAL - Modified 03/06/2008
PDF File ID: 1251122
Report generated 11/20/2008 10:12

Microbac Laboratories Inc.
INITIAL CALIBRATION SUMMARY

00078261

Login Number: L08100867
Analytical Method: 8260B
ICAL Workgroup: WG286813

Instrument ID: HPMS11
Initial Calibration Date: 03-NOV-08 20:21
Column ID: F

Analyte		AVG RF	% RSD	LINEAR (R^2)	QUAD(R^2)
Dichlorodifluoromethane		0.2095	9.83		
Hexachlorobutadiene		0.3086	11.8		
Isopropylbenzene		1.313	10.1		
Methylene Chloride		0.3406	68.8	0.99700	
Naphthalene		1.532	6.07		
Styrene		0.8557	8.22		
Tetrachloroethene		0.2264	8.87		
Trichloroethene		0.2455	13.6		
Trichlorofluoromethane		0.3778	13.7		
Vinyl Acetate		0.1342	35.8		1.00000
cis-1,2-Dichloroethene		0.2304	6.78		
cis-1,3-Dichloropropene		0.3097	10.1		
m-,p-Xylene		0.5263	7.74		
n-Butylbenzene		1.909	10.4		
n-Propylbenzene		2.823	8.37		
o-Xylene		0.5028	8.74		
p-Isopropyltoluene		2.142	11.3		
sec-Butylbenzene		2.451	10.6		
tert-Butylbenzene		0.4238	7.55		
trans-1,2-Dichloroethene		0.2201	8.64		
trans-1,3-Dichloropropene		0.3531	15.1	0.99800	

R = Correlation coefficient; 0.995 minimum
R^2 = Coefficient of determination; 0.99 minimum

If the %RSD is greater than the limit specified by the method or project QAP, then linear or quadratic equations will be used.

INT_CAL - Modified 03/06/2008
PDF File ID: 1251122
Report generated 11/20/2008 10:12

Microbac Laboratories Inc.
INITIAL CALIBRATION SUMMARY

00078262

Login Number: L08100867
Analytical Method: 8260B
ICAL Workgroup: WG286204

Instrument ID: HPMS6
Initial Calibration Date: 28-OCT-08 21:12
Column ID: F

Analyte		AVG RF	% RSD	LINEAR (R^2)	QUAD(R^2)
1,1-Dichloroethene	CCC	0.4102	14.8		
1,2-Dichloropropane	CCC	0.2217	10.1		
Chloroform	CCC	0.4091	9.74		
Ethylbenzene	CCC	0.3502	14.5		
Toluene	CCC	0.9127	13.6		
Vinyl Chloride	CCC	0.2181	18.8		1.00000
1,1,2,2-Tetrachloroethane	SPCC	0.3052	5.06		
1,1-Dichloroethane	SPCC	0.4752	10.4		
Bromoform	SPCC	0.1537	11.1		
Chlorobenzene	SPCC	0.7154	8.93		
Chloromethane	SPCC	0.2604	11.9		
1,1,1,2-Tetrachloroethane		0.2690	9.95		
1,1,1-Trichloroethane		0.3740	12.4		
1,1,2-Trichloroethane		0.1700	5.39		
1,1-Dichloropropene		0.2746	6.01		
1,2,3-Trichlorobenzene		0.5789	6.21		
1,2,3-Trichloropropane		0.1064	6.97		
1,2,4-Trichlorobenzene		0.6580	9.32		
1,2,4-Trimethylbenzene		1.705	10.1		
1,2-Dibromo-3-Chloropropane		0.06638	7.96		
1,2-Dibromoethane		0.1715	9.33		
1,2-Dichlorobenzene		0.9636	8.47		
1,2-Dichloroethane		0.3706	9.91		
1,3,5-Trimethylbenzene		1.526	16.0		1.00000
1,3-Dichlorobenzene		1.037	8.53		
1,3-Dichloropropane		0.2918	7.08		
1,4-Dichlorobenzene		1.126	10.4		
2,2-Dichloropropane		0.3325	14.5		
2-Butanone		0.06605	4.52		
2-Chloroethyl Vinyl Ether		0.09907	14.1		
2-Chlorotoluene		1.472	13.2		
2-Hexanone		0.1189	11.2		
4-Chlorotoluene		1.448	14.9		
4-Methyl-2-Pentanone		0.06163	13.6		
Acetone		0.04502	5.94		
Benzene		0.6910	9.74		
Bromobenzene		0.4965	10.3		
Bromochloromethane		0.1248	4.56		
Bromodichloromethane		0.2815	8.98		
Bromomethane		0.1343	20.0		1.00000
Carbon Disulfide		0.6200	4.26		
Carbon Tetrachloride		0.3333	15.3		1.00000
Chloroethane		0.1731	4.22		
Dibromochloromethane		0.2439	10.2		
Dibromomethane		0.1109	9.99		

INT_CAL - Modified 03/06/2008
PDF File ID: 1251122
Report generated 11/20/2008 10:12

Microbac®

Microbac Laboratories Inc.
INITIAL CALIBRATION SUMMARY

00078263

Login Number: L08100867
Analytical Method: 8260B
ICAL Workgroup: WG286204

Instrument ID: HPMS6
Initial Calibration Date: 28-OCT-08 21:12
Column ID: F

Analyte		AVG RF	% RSD	LINEAR (R^2)	QUAD(R^2)
Dichlorodifluoromethane		0.2339	14.2		
Hexachlorobutadiene		0.2797	9.14		
Isopropylbenzene		1.097	17.8		1.00000
Methylene Chloride		0.2545	43.0	1.00000	
Naphthalene		1.099	11.3		
Styrene		0.7254	15.2		1.00000
Tetrachloroethene		0.2580	15.3		1.00000
Trichloroethene		0.2022	13.4		
Trichlorofluoromethane		0.4193	19.1		1.00000
Vinyl Acetate		0.2924	5.92		
cis-1,2-Dichloroethene		0.2073	12.3		
cis-1,3-Dichloropropene		0.2816	11.6		
m-,p-Xylene		0.4359	14.5		
n-Butylbenzene		1.676	11.6		
n-Propylbenzene		2.116	17.9		1.00000
o-Xylene		0.4276	13.4		
p-Isopropyltoluene		1.804	10.4		
sec-Butylbenzene		1.951	10.8		
tert-Butylbenzene		0.3819	1.71		
trans-1,2-Dichloroethene		0.1949	11.0		
trans-1,3-Dichloropropene		0.3250	14.8		

R = Correlation coefficient; 0.995 minimum
R^2 = Coefficient of determination; 0.99 minimum

If the %RSD is greater than the limit specified by the method or project QAP, then linear or quadratic equations will be used.

INT_CAL - Modified 03/06/2008
PDF File ID: 1251122
Report generated 11/20/2008 10:12

Microbac Laboratories Inc.

INITIAL CALIBRATION DATA

00078264

Login Number: L08100867

Analytical Method: 8260B

Instrument ID: HPMS11

Initial Calibration Date: 03-NOV-08 20:21

Column ID: F

Analyte	WG286813-02			WG286813-03			WG286813-04		
	CONC	RESP	RF	CONC	RESP	RF	CONC	RESP	RF
1,1-Dichloroethene	NA	NA	NA	0.400	5073.00000	0.3845	1.00	9187.00000	0.2891
1,2-Dichloropropane	0.300	1945.00000	0.1869	0.400	2367.00000	0.1794	1.00	5154.00000	0.1622
Chloroform	0.300	4209.00000	0.4044	0.400	5140.00000	0.3896	1.00	11338.0000	0.3568
Ethylbenzene	NA	NA	NA	0.400	4746.00000	0.4792	1.00	8474.00000	0.3443
Toluene	NA	NA	NA	0.400	13294.0000	1.342	1.00	23821.0000	0.9678
Vinyl Chloride	NA	NA	NA	0.400	2516.00000	0.1907	1.00	4844.00000	0.1524
1,1,2,2-Tetrachloroethane	0.300	1196.00000	0.2949	0.400	1794.00000	0.3359	1.00	4062.00000	0.3076
1,1-Dichloroethane	0.300	4478.00000	0.4302	0.400	5511.00000	0.4177	1.00	10891.0000	0.3427
Bromoform	NA	NA	NA	NA	NA	NA	1.00	2028.00000	0.08240
Chlorobenzene	NA	NA	NA	0.400	9036.00000	0.9124	1.00	16930.0000	0.6878
Chloromethane	NA	NA	NA	NA	NA	NA	1.00	4334.00000	0.1364
1,1,1,2-Tetrachloroethane	NA	NA	NA	0.400	2678.00000	0.2704	1.00	5569.00000	0.2263
1,1,1-Trichloroethane	0.300	4018.00000	0.3861	0.400	5197.00000	0.3939	1.00	9544.00000	0.3003
1,1,2-Trichloroethane	NA	NA	NA	0.400	1767.00000	0.1784	1.00	3950.00000	0.1605
1,1-Dichloropropene	0.300	3062.00000	0.2942	0.400	4034.00000	0.3058	1.00	8084.00000	0.2544
1,2,3-Trichlorobenzene	0.300	2906.00000	0.7166	0.400	3811.00000	0.7135	1.00	7565.00000	0.5728
1,2,3-Trichloropropane	NA	NA	NA	NA	NA	NA	1.00	1678.00000	0.1270
1,2,4-Trichlorobenzene	0.300	3409.00000	0.8406	0.400	4452.00000	0.8335	1.00	8910.00000	0.6746
1,2,4-Trimethylbenzene	NA	NA	NA	NA	NA	NA	1.00	24016.0000	1.818
1,2-Dibromo-3-Chloropropane	NA	NA	NA	NA	NA	NA	NA	NA	NA
1,2-Dibromoethane	NA	NA	NA	0.400	1715.00000	0.1732	1.00	4290.00000	0.1743
1,2-Dichlorobenzene	0.300	5033.00000	1.241	0.400	5888.00000	1.102	1.00	12298.0000	0.9311
1,2-Dichloroethane	0.300	3189.00000	0.3064	0.400	4195.00000	0.3180	1.00	8596.00000	0.2705
1,3,5-Trimethylbenzene	0.300	8864.00000	2.186	0.400	11015.0000	2.062	1.00	21644.0000	1.639
1,3-Dichlorobenzene	NA	NA	NA	0.400	6723.00000	1.259	1.00	13367.0000	1.012
1,3-Dichloropropane	NA	NA	NA	0.400	3798.00000	0.3835	1.00	7645.00000	0.3106
1,4-Dichlorobenzene	0.300	6045.00000	1.491	0.400	7246.00000	1.357	1.00	14137.0000	1.070
2,2-Dichloropropane	0.300	4192.00000	0.4028	0.400	4730.00000	0.3585	1.00	8519.00000	0.2681
2-Butanone	NA	NA	NA	NA	NA	NA	NA	NA	NA
2-Chloroethyl Vinyl Ether	NA	NA	NA	NA	NA	NA	NA	NA	NA
2-Chlorotoluene	0.300	8995.00000	2.218	0.400	12145.0000	2.274	1.00	19332.0000	1.464
2-Hexanone	NA	NA	NA	NA	NA	NA	NA	NA	NA
4-Chlorotoluene	0.300	8288.00000	2.044	0.400	10316.0000	1.931	1.00	22797.0000	1.726
4-Methyl-2-Pentanone	NA	NA	NA	NA	NA	NA	NA	NA	NA
Acetone	NA	NA	NA	NA	NA	NA	NA	NA	NA
Benzene	0.300	9758.00000	0.9376	0.400	12065.0000	0.9145	1.00	23276.0000	0.7324
Bromobenzene	0.300	2457.00000	0.6058	0.400	3540.00000	0.6627	1.00	7018.00000	0.5314
Bromochloromethane	NA	NA	NA	0.400	1456.00000	0.1104	1.00	3203.00000	0.1008
Bromodichloromethane	0.300	2856.00000	0.2744	0.400	3603.00000	0.2731	1.00	7280.00000	0.2291
Bromomethane	NA	NA	NA	0.400	1549.00000	0.1174	1.00	2518.00000	0.07920
Carbon Disulfide	NA	NA	NA	NA	NA	NA	1.00	12228.0000	0.3848
Carbon Tetrachloride	0.300	2922.00000	0.2807	0.400	3811.00000	0.2889	1.00	7238.00000	0.2278

INT_CAL - Modified 03/06/2008
PDF File ID: 1251122
Report generated 11/20/2008 10:12

Microbac®

Microbac Laboratories Inc.

INITIAL CALIBRATION DATA

00078265

Login Number: L08100867

Analytical Method: 8260B

Instrument ID: HPMS11

Initial Calibration Date: 03-NOV-08 20:21

Column ID: F

Analyte	WG286813-05			WG286813-06			WG286813-07		
	CONC	RESP	RF	CONC	RESP	RF	CONC	RESP	RF
1,1-Dichloroethene	2.00	23500.0000	0.3668	5.00	61450.0000	0.3869	20.0	239029.000	0.3864
1,2-Dichloropropane	2.00	12630.0000	0.1971	5.00	32719.0000	0.2060	20.0	128238.000	0.2073
Chloroform	2.00	26060.0000	0.4068	5.00	67826.0000	0.4270	20.0	259939.000	0.4202
Ethylbenzene	2.00	20726.0000	0.4196	5.00	53683.0000	0.4362	20.0	215249.000	0.4445
Toluene	2.00	56996.0000	1.154	5.00	146875.000	1.193	20.0	578760.000	1.195
Vinyl Chloride	2.00	10254.0000	0.1601	5.00	28579.0000	0.1799	20.0	106362.000	0.1719
1,1,2,2-Tetrachloroethane	2.00	9739.00000	0.3639	5.00	25501.0000	0.3870	20.0	101366.000	0.3775
1,1-Dichloroethane	2.00	25095.0000	0.3917	5.00	64105.0000	0.4036	20.0	254721.000	0.4117
Bromoform	2.00	4699.00000	0.09510	5.00	14160.0000	0.1150	20.0	65357.0000	0.1350
Chlorobenzene	2.00	39669.0000	0.8031	5.00	99414.0000	0.8077	20.0	387866.000	0.8010
Chloromethane	2.00	9056.00000	0.1414	5.00	21693.0000	0.1366	20.0	75067.0000	0.1213
1,1,1,2-Tetrachloroethane	2.00	11764.0000	0.2382	5.00	32091.0000	0.2607	20.0	132602.000	0.2739
1,1,1-Trichloroethane	2.00	23610.0000	0.3685	5.00	64516.0000	0.4062	20.0	251923.000	0.4072
1,1,2-Trichloroethane	2.00	9324.00000	0.1888	5.00	24432.0000	0.1985	20.0	96182.0000	0.1986
1,1-Dichloropropene	2.00	19139.0000	0.2988	5.00	51137.0000	0.3219	20.0	199700.000	0.3228
1,2,3-Trichlorobenzene	2.00	17514.0000	0.6544	5.00	44983.0000	0.6826	20.0	188012.000	0.7001
1,2,3-Trichloropropane	2.00	3685.00000	0.1377	5.00	9145.00000	0.1388	20.0	37829.0000	0.1409
1,2,4-Trichlorobenzene	2.00	20375.0000	0.7613	5.00	53021.0000	0.8046	20.0	215697.000	0.8032
1,2,4-Trimethylbenzene	2.00	55369.0000	2.069	5.00	148261.000	2.250	20.0	611804.000	2.278
1,2-Dibromo-3-Chloropropane	2.00	1406.00000	0.05250	5.00	4825.00000	0.07320	20.0	21711.0000	0.08080
1,2-Dibromoethane	2.00	9639.00000	0.1951	5.00	25128.0000	0.2042	20.0	100925.000	0.2084
1,2-Dichlorobenzene	2.00	29240.0000	1.093	5.00	72568.0000	1.101	20.0	299987.000	1.117
1,2-Dichloroethane	2.00	20397.0000	0.3184	5.00	53062.0000	0.3340	20.0	202443.000	0.3272
1,3,5-Trimethylbenzene	2.00	52177.0000	1.950	5.00	142987.000	2.170	20.0	602360.000	2.243
1,3-Dichlorobenzene	2.00	32053.0000	1.198	5.00	79975.0000	1.214	20.0	327853.000	1.221
1,3-Dichloropropane	2.00	17750.0000	0.3594	5.00	45610.0000	0.3706	20.0	175516.000	0.3625
1,4-Dichlorobenzene	2.00	32566.0000	1.217	5.00	82788.0000	1.256	20.0	335766.000	1.250
2,2-Dichloropropane	2.00	21120.0000	0.3297	5.00	55459.0000	0.3491	20.0	216216.000	0.3495
2-Butanone	NA	NA	NA	5.00	9121.00000	0.05740	20.0	33941.0000	0.05490
2-Chloroethyl Vinyl Ether	NA	NA	NA	5.00	10421.0000	0.06560	20.0	41569.0000	0.06720
2-Chlorotoluene	2.00	45764.0000	1.710	5.00	123734.000	1.878	20.0	579163.000	2.157
2-Hexanone	NA	NA	NA	5.00	12665.0000	0.1029	20.0	52035.0000	0.1075
4-Chlorotoluene	2.00	53204.0000	1.988	5.00	133521.000	2.026	20.0	460355.000	1.714
4-Methyl-2-Pentanone	NA	NA	NA	5.00	8542.00000	0.05380	20.0	33307.0000	0.05380
Acetone	NA	NA	NA	5.00	8236.00000	0.05180	20.0	25475.0000	0.04120
Benzene	2.00	53145.0000	0.8296	5.00	136475.000	0.8592	20.0	531855.000	0.8597
Bromobenzene	2.00	15881.0000	0.5934	5.00	42535.0000	0.6455	20.0	165736.000	0.6172
Bromochloromethane	2.00	7899.00000	0.1233	5.00	21129.0000	0.1330	20.0	83919.0000	0.1356
Bromodichloromethane	2.00	17219.0000	0.2688	5.00	44924.0000	0.2828	20.0	184950.000	0.2990
Bromomethane	2.00	6731.00000	0.1051	5.00	15347.0000	0.09660	20.0	66117.0000	0.1069
Carbon Disulfide	2.00	36450.0000	0.5690	5.00	102715.000	0.6466	20.0	388615.000	0.6282
Carbon Tetrachloride	2.00	18495.0000	0.2887	5.00	48272.0000	0.3039	20.0	204117.000	0.3299

INT_CAL - Modified 03/06/2008
PDF File ID: 1251122
Report generated 11/20/2008 10:12

Microbac Laboratories Inc.

INITIAL CALIBRATION DATA

00078266

Login Number: L08100867

Analytical Method: 8260B

Instrument ID: HPMS11

Initial Calibration Date: 03-NOV-08 20:21

Column ID: F

Analyte	WG286813-08			WG286813-09			WG286813-10		
	CONC	RESP	RF	CONC	RESP	RF	CONC	RESP	RF
1,1-Dichloroethene	50.0	618437.000	0.3896	100	1311112.00	0.3503	200	2219411.00	0.3203
1,2-Dichloropropane	50.0	334425.000	0.2107	100	741079.000	0.1980	200	1333657.00	0.1925
Chloroform	50.0	686102.000	0.4322	100	1503344.00	0.4017	200	2631383.00	0.3798
Ethylbenzene	50.0	534393.000	0.4432	100	1185473.00	0.4266	200	2358608.00	0.4054
Toluene	50.0	1479004.00	1.227	100	3369949.00	1.213	200	6631018.00	1.140
Vinyl Chloride	50.0	251161.000	0.1582	100	463635.000	0.1239	NA	NA	NA
1,1,2,2-Tetrachloroethane	50.0	273025.000	0.3941	100	567215.000	0.3762	200	1073831.00	0.3475
1,1-Dichloroethane	50.0	661854.000	0.4169	100	1449736.00	0.3874	200	2494970.00	0.3601
Bromoform	50.0	189121.000	0.1568	100	418579.000	0.1506	200	821333.000	0.1412
Chlorobenzene	50.0	965930.000	0.8010	100	2096758.00	0.7546	200	4164859.00	0.7158
Chloromethane	50.0	191422.000	0.1206	100	442851.000	0.1183	200	928963.000	0.1341
1,1,1,2-Tetrachloroethane	50.0	342823.000	0.2843	100	742709.000	0.2673	200	1430741.00	0.2459
1,1,1-Trichloroethane	50.0	666387.000	0.4198	100	1430570.00	0.3823	200	2442328.00	0.3525
1,1,2-Trichloroethane	50.0	247498.000	0.2052	100	543408.000	0.1956	200	1030159.00	0.1771
1,1-Dichloropropene	50.0	526375.000	0.3316	100	1127761.00	0.3013	200	1929599.00	0.2785
1,2,3-Trichlorobenzene	50.0	481720.000	0.6953	100	1014542.00	0.6729	200	1966460.00	0.6364
1,2,3-Trichloropropane	50.0	98973.0000	0.1429	100	203793.000	0.1352	200	372120.000	0.1204
1,2,4-Trichlorobenzene	50.0	552206.000	0.7970	100	1152704.00	0.7645	200	2294240.00	0.7425
1,2,4-Trimethylbenzene	50.0	1543315.00	2.228	100	3219819.00	2.135	200	6383187.00	2.066
1,2-Dibromo-3-Chloropropane	50.0	57659.0000	0.08320	100	120512.000	0.07990	200	220283.000	0.07130
1,2-Dibromoethane	50.0	256179.000	0.2124	100	564217.000	0.2030	200	1071678.00	0.1842
1,2-Dichlorobenzene	50.0	777634.000	1.122	100	1611751.00	1.069	200	3129496.00	1.013
1,2-Dichloroethane	50.0	529126.000	0.3333	100	1128866.00	0.3016	200	1912902.00	0.2761
1,3,5-Trimethylbenzene	50.0	1504494.00	2.172	100	3191250.00	2.117	200	6357546.00	2.058
1,3-Dichlorobenzene	50.0	842992.000	1.217	100	1756032.00	1.165	200	3505875.00	1.135
1,3-Dichloropropane	50.0	451657.000	0.3745	100	976913.000	0.3516	200	1847593.00	0.3175
1,4-Dichlorobenzene	50.0	867614.000	1.252	100	1786863.00	1.185	200	3537001.00	1.145
2,2-Dichloropropane	50.0	539789.000	0.3400	100	1173927.00	0.3137	200	2179826.00	0.3146
2-Butanone	50.0	88722.0000	0.05590	100	189677.000	0.05070	200	324315.000	0.04680
2-Chloroethyl Vinyl Ether	50.0	115574.000	0.07280	100	288346.000	0.07700	200	593133.000	0.08560
2-Chlorotoluene	50.0	1444546.00	2.085	100	2884897.00	1.913	200	5182674.00	1.677
2-Hexanone	50.0	140968.000	0.1169	100	286686.000	0.1032	200	514290.000	0.08840
4-Chlorotoluene	50.0	1184485.00	1.710	100	2560705.00	1.698	200	5251003.00	1.700
4-Methyl-2-Pentanone	50.0	86637.0000	0.05460	100	183072.000	0.04890	200	300208.000	0.04330
Acetone	50.0	64219.0000	0.04050	100	142219.000	0.03800	200	242998.000	0.03510
Benzene	50.0	1384074.00	0.8719	100	3054152.00	0.8161	200	5306586.00	0.7658
Bromobenzene	50.0	423773.000	0.6117	100	890811.000	0.5908	200	1794420.00	0.5808
Bromochloromethane	50.0	213914.000	0.1348	100	478812.000	0.1279	200	855961.000	0.1235
Bromodichloromethane	50.0	495718.000	0.3123	100	1099542.00	0.2938	200	2025778.00	0.2924
Bromomethane	50.0	157557.000	0.09930	100	311550.000	0.08320	NA	NA	NA
Carbon Disulfide	50.0	1016118.00	0.6401	100	2254846.00	0.6025	200	3955680.00	0.5709
Carbon Tetrachloride	50.0	550809.000	0.3470	100	1163086.00	0.3108	200	2075577.00	0.2995

INT_CAL - Modified 03/06/2008
PDF File ID: 1251122
Report generated 11/20/2008 10:12

Microbac®

Microbac Laboratories Inc.

INITIAL CALIBRATION DATA

00078267

Login Number: L08100867

Analytical Method: 8260B

Instrument ID: HPMS11

Initial Calibration Date: 03-NOV-08 20:21

Column ID: F

Analyte	WG286813-11		
	CONC	RESP	RF
1,1-Dichloroethene	NA	NA	NA
1,2-Dichloropropane	NA	NA	NA
Chloroform	NA	NA	NA
Ethylbenzene	NA	NA	NA
Toluene	NA	NA	NA
Vinyl Chloride	NA	NA	NA
1,1,2,2-Tetrachloroethane	NA	NA	NA
1,1-Dichloroethane	NA	NA	NA
Bromoform	NA	NA	NA
Chlorobenzene	NA	NA	NA
Chloromethane	NA	NA	NA
1,1,1,2-Tetrachloroethane	NA	NA	NA
1,1,1-Trichloroethane	NA	NA	NA
1,1,2-Trichloroethane	NA	NA	NA
1,1-Dichloropropene	NA	NA	NA
1,2,3-Trichlorobenzene	NA	NA	NA
1,2,3-Trichloropropane	NA	NA	NA
1,2,4-Trichlorobenzene	NA	NA	NA
1,2,4-Trimethylbenzene	NA	NA	NA
1,2-Dibromo-3-Chloropropane	NA	NA	NA
1,2-Dibromoethane	NA	NA	NA
1,2-Dichlorobenzene	NA	NA	NA
1,2-Dichloroethane	NA	NA	NA
1,3,5-Trimethylbenzene	NA	NA	NA
1,3-Dichlorobenzene	NA	NA	NA
1,3-Dichloropropane	NA	NA	NA
1,4-Dichlorobenzene	NA	NA	NA
2,2-Dichloropropane	NA	NA	NA
2-Butanone	300	513271.000	0.05000
2-Chloroethyl Vinyl Ether	300	921211.000	0.08980
2-Chlorotoluene	NA	NA	NA
2-Hexanone	300	795702.000	0.09170
4-Chlorotoluene	NA	NA	NA
4-Methyl-2-Pentanone	300	473150.000	0.04610
Acetone	300	333682.000	0.03250
Benzene	NA	NA	NA
Bromobenzene	NA	NA	NA
Bromochloromethane	NA	NA	NA
Bromodichloromethane	NA	NA	NA
Bromomethane	NA	NA	NA
Carbon Disulfide	NA	NA	NA
Carbon Tetrachloride	NA	NA	NA

INT_CAL - Modified 03/06/2008
PDF File ID: 1251122
Report generated 11/20/2008 10:12

Microbac Laboratories Inc.

INITIAL CALIBRATION DATA

00078268

Login Number: L08100867

Analytical Method: 8260B

Instrument ID: HPMS11

Initial Calibration Date: 03-NOV-08 20:21

Column ID: F

Analyte	WG286813-02			WG286813-03			WG286813-04		
	CONC	RESP	RF	CONC	RESP	RF	CONC	RESP	RF
Chloroethane	NA	NA	NA	NA	NA	NA	1.00	3205.00000	0.1009
Dibromochloromethane	NA	NA	NA	0.400	2052.00000	0.2072	1.00	4245.00000	0.1725
Dibromomethane	NA	NA	NA	0.400	1453.00000	0.1101	1.00	2625.00000	0.08260
Dichlorodifluoromethane	NA	NA	NA	NA	NA	NA	1.00	6225.00000	0.1959
Hexachlorobutadiene	0.300	1470.00000	0.3625	0.400	1761.00000	0.3297	1.00	3028.00000	0.2293
Isopropylbenzene	NA	NA	NA	0.400	13759.0000	1.389	1.00	25253.0000	1.026
Methylene Chloride	NA	NA	NA	0.400	11703.0000	0.8871	1.00	13221.0000	0.4160
Naphthalene	NA	NA	NA	0.400	8455.00000	1.583	1.00	18914.0000	1.432
Styrene	NA	NA	NA	0.400	8594.00000	0.8678	1.00	17382.0000	0.7062
Tetrachloroethene	NA	NA	NA	0.400	2098.00000	0.2119	1.00	4633.00000	0.1882
Trichloroethene	NA	NA	NA	0.400	4218.00000	0.3197	1.00	6774.00000	0.2132
Trichlorofluoromethane	NA	NA	NA	0.400	4128.00000	0.3129	1.00	10122.0000	0.3185
Vinyl Acetate	NA	NA	NA	NA	NA	NA	1.00	4126.00000	0.1298
cis-1,2-Dichloroethene	0.300	2630.00000	0.2527	0.400	2968.00000	0.2250	1.00	6341.00000	0.1995
cis-1,3-Dichloropropene	0.300	3052.00000	0.2932	0.400	3797.00000	0.2878	1.00	7927.00000	0.2494
m-,p-Xylene	NA	NA	NA	0.800	11283.0000	0.5697	2.00	22061.0000	0.4482
n-Butylbenzene	NA	NA	NA	NA	NA	NA	1.00	19856.0000	1.503
n-Propylbenzene	NA	NA	NA	0.400	15792.0000	2.956	1.00	30132.0000	2.281
o-Xylene	NA	NA	NA	0.400	5259.00000	0.5310	1.00	10056.0000	0.4086
p-Isopropyltoluene	NA	NA	NA	NA	NA	NA	1.00	21985.0000	1.665
sec-Butylbenzene	NA	NA	NA	NA	NA	NA	1.00	25268.0000	1.913
tert-Butylbenzene	NA	NA	NA	NA	NA	NA	1.00	4779.00000	0.3618
trans-1,2-Dichloroethene	0.300	2540.00000	0.2440	0.400	3060.00000	0.2319	1.00	5757.00000	0.1812
trans-1,3-Dichloropropene	NA	NA	NA	NA	NA	NA	1.00	6461.00000	0.2625

INT_CAL - Modified 03/06/2008
PDF File ID: 1251122
Report generated 11/20/2008 10:12

Microbac®

Microbac Laboratories Inc.

INITIAL CALIBRATION DATA

00078269

Login Number: L08100867

Analytical Method: 8260B

Instrument ID: HPMS11

Initial Calibration Date: 03-NOV-08 20:21

Column ID: F

Analyte	WG286813-05			WG286813-06			WG286813-07		
	CONC	RESP	RF	CONC	RESP	RF	CONC	RESP	RF
Chloroethane	2.00	8413.00000	0.1313	5.00	24169.0000	0.1522	20.0	85526.0000	0.1382
Dibromochloromethane	2.00	10512.0000	0.2128	5.00	28931.0000	0.2351	20.0	127135.000	0.2626
Dibromomethane	2.00	6707.00000	0.1047	5.00	18181.0000	0.1145	20.0	69737.0000	0.1127
Dichlorodifluoromethane	2.00	13225.0000	0.2064	5.00	38082.0000	0.2397	20.0	139665.000	0.2258
Hexachlorobutadiene	2.00	7609.00000	0.2843	5.00	20837.0000	0.3162	20.0	87160.0000	0.3246
Isopropylbenzene	2.00	62317.0000	1.262	5.00	171765.000	1.396	20.0	687438.000	1.420
Methylene Chloride	2.00	21212.0000	0.3311	5.00	42889.0000	0.2700	20.0	139462.000	0.2254
Naphthalene	2.00	41042.0000	1.534	5.00	106226.000	1.612	20.0	439923.000	1.638
Styrene	2.00	41068.0000	0.8314	5.00	108478.000	0.8813	20.0	443087.000	0.9151
Tetrachloroethene	2.00	10850.0000	0.2197	5.00	29400.0000	0.2389	20.0	114599.000	0.2367
Trichloroethene	2.00	15735.0000	0.2456	5.00	38992.0000	0.2455	20.0	152806.000	0.2470
Trichlorofluoromethane	2.00	24863.0000	0.3881	5.00	70536.0000	0.4441	20.0	263437.000	0.4258
Vinyl Acetate	2.00	6914.00000	0.1079	5.00	13645.0000	0.08590	20.0	68693.0000	0.1110
cis-1,2-Dichloroethene	2.00	15125.0000	0.2361	5.00	37377.0000	0.2353	20.0	146344.000	0.2366
cis-1,3-Dichloropropene	2.00	18693.0000	0.2918	5.00	51468.0000	0.3240	20.0	210380.000	0.3401
m-,p-Xylene	4.00	51009.0000	0.5164	10.0	136623.000	0.5550	40.0	539228.000	0.5568
n-Butylbenzene	2.00	48788.0000	1.823	5.00	129252.000	1.961	20.0	559694.000	2.084
n-Propylbenzene	2.00	73902.0000	2.761	5.00	196084.000	2.976	20.0	809779.000	3.016
o-Xylene	2.00	24049.0000	0.4869	5.00	64852.0000	0.5269	20.0	262434.000	0.5420
p-Isopropyltoluene	2.00	53411.0000	1.996	5.00	147332.000	2.236	20.0	636374.000	2.370
sec-Butylbenzene	2.00	62749.0000	2.345	5.00	171816.000	2.607	20.0	717759.000	2.673
tert-Butylbenzene	2.00	11481.0000	0.4290	5.00	30052.0000	0.4560	20.0	121785.000	0.4535
trans-1,2-Dichloroethene	2.00	13756.0000	0.2147	5.00	36479.0000	0.2296	20.0	141203.000	0.2282
trans-1,3-Dichloropropene	2.00	15124.0000	0.3062	5.00	42331.0000	0.3439	20.0	186762.000	0.3857

INT_CAL - Modified 03/06/2008
PDF File ID: 1251122
Report generated 11/20/2008 10:12

Microbac®

Microbac Laboratories Inc.

INITIAL CALIBRATION DATA

00078270

Login Number: L08100867

Analytical Method: 8260B

Instrument ID: HPMS11

Initial Calibration Date: 03-NOV-08 20:21

Column ID: F

Analyte	WG286813-08			WG286813-09			WG286813-10		
	CONC	RESP	RF	CONC	RESP	RF	CONC	RESP	RF
Chloroethane	50.0	201899.000	0.1272	100	400804.000	0.1071	NA	NA	NA
Dibromochloromethane	50.0	339608.000	0.2816	100	755363.000	0.2718	200	1474561.00	0.2534
Dibromomethane	50.0	180873.000	0.1139	100	382907.000	0.1023	200	696405.000	0.1005
Dichlorodifluoromethane	50.0	349885.000	0.2204	100	749199.000	0.2002	200	1236253.00	0.1784
Hexachlorobutadiene	50.0	209326.000	0.3021	100	475497.000	0.3154	200	967421.000	0.3131
Isopropylbenzene	50.0	1712851.00	1.420	100	3679305.00	1.324	200	7384425.00	1.269
Methylene Chloride	50.0	344525.000	0.2170	100	738372.000	0.1973	200	1254836.00	0.1811
Naphthalene	50.0	1100180.00	1.588	100	2258961.00	1.498	200	4236108.00	1.371
Styrene	50.0	1131225.00	0.9381	100	2414297.00	0.8689	200	4866975.00	0.8365
Tetrachloroethene	50.0	299986.000	0.2488	100	679973.000	0.2447	200	1294902.00	0.2226
Trichloroethene	50.0	394875.000	0.2487	100	861852.000	0.2303	200	1481170.00	0.2138
Trichlorofluoromethane	50.0	672102.000	0.4234	100	1417922.00	0.3789	200	2288451.00	0.3303
Vinyl Acetate	50.0	168416.000	0.1061	100	470301.000	0.1257	200	1190220.00	0.1718
cis-1,2-Dichloroethene	50.0	387268.000	0.2440	100	851751.000	0.2276	200	1501915.00	0.2168
cis-1,3-Dichloropropene	50.0	551484.000	0.3474	100	1221040.00	0.3263	200	2267829.00	0.3273
m-,p-Xylene	100	1329890.00	0.5514	200	2888585.00	0.5198	400	5738626.00	0.4931
n-Butylbenzene	50.0	1433441.00	2.069	100	2999616.00	1.989	200	5972322.00	1.933
n-Propylbenzene	50.0	2037448.00	2.941	100	4305221.00	2.855	200	8633314.00	2.794
o-Xylene	50.0	647990.000	0.5374	100	1396609.00	0.5026	200	2831950.00	0.4867
p-Isopropyltoluene	50.0	1610871.00	2.325	100	3367419.00	2.233	200	6696804.00	2.167
sec-Butylbenzene	50.0	1812939.00	2.617	100	3803901.00	2.523	200	7651073.00	2.476
tert-Butylbenzene	50.0	301523.000	0.4352	100	636832.000	0.4224	200	1263435.00	0.4089
trans-1,2-Dichloroethene	50.0	369350.000	0.2327	100	809501.000	0.2163	200	1403676.00	0.2026
trans-1,3-Dichloropropene	50.0	496357.000	0.4116	100	1103089.00	0.3970	200	2122379.00	0.3648

INT_CAL - Modified 03/06/2008
PDF File ID: 1251122
Report generated 11/20/2008 10:12

Microbac®

Microbac Laboratories Inc.
INITIAL CALIBRATION DATA

00078271

Login Number: L08100867
Analytical Method: 8260B

Instrument ID: HPMS11
Initial Calibration Date: 03-NOV-08 20:21
Column ID: F

Analyte	WG286813-11		
	CONC	RESP	RF
Chloroethane	NA	NA	NA
Dibromochloromethane	NA	NA	NA
Dibromomethane	NA	NA	NA
Dichlorodifluoromethane	NA	NA	NA
Hexachlorobutadiene	NA	NA	NA
Isopropylbenzene	NA	NA	NA
Methylene Chloride	NA	NA	NA
Naphthalene	NA	NA	NA
Styrene	NA	NA	NA
Tetrachloroethene	NA	NA	NA
Trichloroethene	NA	NA	NA
Trichlorofluoromethane	NA	NA	NA
Vinyl Acetate	300	2417797.00	0.2357
cis-1,2-Dichloroethene	NA	NA	NA
cis-1,3-Dichloropropene	NA	NA	NA
m-,p-Xylene	NA	NA	NA
n-Butylbenzene	NA	NA	NA
n-Propylbenzene	NA	NA	NA
o-Xylene	NA	NA	NA
p-Isopropyltoluene	NA	NA	NA
sec-Butylbenzene	NA	NA	NA
tert-Butylbenzene	NA	NA	NA
trans-1,2-Dichloroethene	NA	NA	NA
trans-1,3-Dichloropropene	NA	NA	NA

INT_CAL - Modified 03/06/2008
PDF File ID: 1251122
Report generated 11/20/2008 10:12

Microbac®

Microbac Laboratories Inc.

INITIAL CALIBRATION DATA

00078272

Login Number: L08100867

Analytical Method: 8260B

Instrument ID: HPMS6

Initial Calibration Date: 28-OCT-08 21:12

Column ID: F

Analyte	WG286204-02			WG286204-03			WG286204-04		
	CONC	RESP	RF	CONC	RESP	RF	CONC	RESP	RF
1,1-Dichloroethene	NA	NA	NA	0.400	6318.00000	0.2741	1.00	27483.0000	0.4821
1,2-Dichloropropane	NA	NA	NA	0.400	3880.00000	0.1683	1.00	13534.0000	0.2374
Chloroform	0.300	8080.00000	0.4430	0.400	7513.00000	0.3260	1.00	26901.0000	0.4719
Ethylbenzene	NA	NA	NA	0.400	4316.00000	0.2284	1.00	17974.0000	0.3874
Toluene	NA	NA	NA	0.400	12687.0000	0.6713	1.00	48001.0000	1.035
Vinyl Chloride	NA	NA	NA	NA	NA	NA	1.00	16062.0000	0.2818
1,1,2,2-Tetrachloroethane	NA	NA	NA	0.400	3468.00000	0.2837	1.00	9598.00000	0.3203
1,1-Dichloroethane	NA	NA	NA	0.400	8475.00000	0.3677	1.00	30780.0000	0.5399
Bromoform	NA	NA	NA	NA	NA	NA	1.00	6236.00000	0.1344
Chlorobenzene	NA	NA	NA	0.400	11565.0000	0.6119	1.00	37817.0000	0.8151
Chloromethane	NA	NA	NA	NA	NA	NA	1.00	18267.0000	0.3204
1,1,1,2-Tetrachloroethane	NA	NA	NA	0.400	3904.00000	0.2066	1.00	12564.0000	0.2708
1,1,1-Trichloroethane	NA	NA	NA	0.400	6179.00000	0.2681	1.00	24330.0000	0.4268
1,1,2-Trichloroethane	NA	NA	NA	0.400	2906.00000	0.1538	1.00	8436.00000	0.1818
1,1-Dichloropropene	NA	NA	NA	NA	NA	NA	1.00	16992.0000	0.2981
1,2,3-Trichlorobenzene	0.300	5614.00000	0.6034	0.400	6437.00000	0.5265	1.00	19252.0000	0.6425
1,2,3-Trichloropropane	NA	NA	NA	NA	NA	NA	1.00	3601.00000	0.1202
1,2,4-Trichlorobenzene	NA	NA	NA	0.400	6386.00000	0.5224	1.00	21532.0000	0.7186
1,2,4-Trimethylbenzene	NA	NA	NA	NA	NA	NA	1.00	53917.0000	1.800
1,2-Dibromo-3-Chloropropane	NA	NA	NA	NA	NA	NA	NA	NA	NA
1,2-Dibromoethane	NA	NA	NA	0.400	2677.00000	0.1416	1.00	8627.00000	0.1860
1,2-Dichlorobenzene	0.300	8929.00000	0.9597	0.400	9702.00000	0.7936	1.00	32314.0000	1.079
1,2-Dichloroethane	NA	NA	NA	0.400	7074.00000	0.3069	1.00	24466.0000	0.4292
1,3,5-Trimethylbenzene	NA	NA	NA	0.400	12335.0000	1.009	1.00	48879.0000	1.631
1,3-Dichlorobenzene	NA	NA	NA	0.400	10496.0000	0.8586	1.00	34015.0000	1.135
1,3-Dichloropropane	NA	NA	NA	0.400	4712.00000	0.2493	1.00	14505.0000	0.3127
1,4-Dichlorobenzene	0.300	12276.0000	1.319	0.400	11919.0000	0.9750	1.00	38101.0000	1.272
2,2-Dichloropropane	NA	NA	NA	0.400	4992.00000	0.2166	1.00	20906.0000	0.3667
2-Butanone	NA	NA	NA	NA	NA	NA	NA	NA	NA
2-Chloroethyl Vinyl Ether	NA	NA	NA	NA	NA	NA	NA	NA	NA
2-Chlorotoluene	NA	NA	NA	0.400	14167.0000	1.159	1.00	53717.0000	1.793
2-Hexanone	NA	NA	NA	NA	NA	NA	NA	NA	NA
4-Chlorotoluene	NA	NA	NA	0.400	13538.0000	1.107	1.00	46747.0000	1.560
4-Methyl-2-Pentanone	NA	NA	NA	NA	NA	NA	NA	NA	NA
Acetone	NA	NA	NA	NA	NA	NA	NA	NA	NA
Benzene	NA	NA	NA	0.400	12693.0000	0.5507	1.00	43367.0000	0.7607
Bromobenzene	0.300	4465.00000	0.4799	0.400	4567.00000	0.3736	1.00	16698.0000	0.5573
Bromochloromethane	NA	NA	NA	0.400	2591.00000	0.1124	1.00	7344.00000	0.1288
Bromodichloromethane	NA	NA	NA	0.400	5123.00000	0.2223	1.00	16423.0000	0.2881
Bromomethane	NA	NA	NA	NA	NA	NA	1.00	6280.00000	0.1102
Carbon Disulfide	NA	NA	NA	NA	NA	NA	1.00	37806.0000	0.6632
Carbon Tetrachloride	NA	NA	NA	0.400	4839.00000	0.2100	1.00	20850.0000	0.3657

INT_CAL - Modified 03/06/2008
PDF File ID: 1251122
Report generated 11/20/2008 10:12

Microbac®

Microbac Laboratories Inc.

INITIAL CALIBRATION DATA

00078273

Login Number: L08100867

Analytical Method: 8260B

Instrument ID: HPMS6

Initial Calibration Date: 28-OCT-08 21:12

Column ID: F

Analyte	WG286204-05			WG286204-06			WG286204-07		
	CONC	RESP	RF	CONC	RESP	RF	CONC	RESP	RF
1,1-Dichloroethene	2.00	48512.0000	0.4169	5.00	119247.000	0.4082	20.0	556785.000	0.4503
1,2-Dichloropropane	2.00	25927.0000	0.2228	5.00	64422.0000	0.2205	20.0	283871.000	0.2296
Chloroform	2.00	47399.0000	0.4074	5.00	114895.000	0.3933	20.0	518107.000	0.4190
Ethylbenzene	2.00	34698.0000	0.3704	5.00	82681.0000	0.3499	20.0	377250.000	0.3732
Toluene	2.00	88029.0000	0.9396	5.00	221802.000	0.9387	20.0	1013620.00	1.003
Vinyl Chloride	2.00	28057.0000	0.2411	5.00	63342.0000	0.2168	20.0	267483.000	0.2163
1,1,2,2-Tetrachloroethane	2.00	18240.0000	0.3005	5.00	45157.0000	0.2875	20.0	204503.000	0.3027
1,1-Dichloroethane	2.00	55810.0000	0.4797	5.00	137540.000	0.4708	20.0	617625.000	0.4995
Bromoform	2.00	12790.0000	0.1365	5.00	32723.0000	0.1385	20.0	159883.000	0.1582
Chlorobenzene	2.00	69194.0000	0.7386	5.00	168049.000	0.7112	20.0	745548.000	0.7376
Chloromethane	2.00	31796.0000	0.2733	5.00	75339.0000	0.2579	20.0	328877.000	0.2660
1,1,1,2-Tetrachloroethane	2.00	25105.0000	0.2680	5.00	63054.0000	0.2668	20.0	285640.000	0.2826
1,1,1-Trichloroethane	2.00	42639.0000	0.3665	5.00	109076.000	0.3734	20.0	493467.000	0.3991
1,1,2-Trichloroethane	2.00	16481.0000	0.1759	5.00	38132.0000	0.1614	20.0	170989.000	0.1692
1,1-Dichloropropene	2.00	29375.0000	0.2525	5.00	75189.0000	0.2574	20.0	357381.000	0.2890
1,2,3-Trichlorobenzene	2.00	34150.0000	0.5626	5.00	89465.0000	0.5695	20.0	403467.000	0.5972
1,2,3-Trichloropropane	2.00	6261.00000	0.1031	5.00	15242.0000	0.09700	20.0	68773.0000	0.1018
1,2,4-Trichlorobenzene	2.00	39939.0000	0.6580	5.00	103717.000	0.6603	20.0	474104.000	0.7018
1,2,4-Trimethylbenzene	2.00	102403.000	1.687	5.00	270826.000	1.724	20.0	1248561.00	1.848
1,2-Dibromo-3-Chloropropane	2.00	3627.00000	0.05980	5.00	9589.00000	0.06100	20.0	47821.0000	0.07080
1,2-Dibromoethane	2.00	15049.0000	0.1606	5.00	37860.0000	0.1602	20.0	177887.000	0.1760
1,2-Dichlorobenzene	2.00	60671.0000	0.9995	5.00	152995.000	0.9740	20.0	676867.000	1.002
1,2-Dichloroethane	2.00	45130.0000	0.3879	5.00	109673.000	0.3754	20.0	477881.000	0.3865
1,3,5-Trimethylbenzene	2.00	95483.0000	1.573	5.00	248897.000	1.585	20.0	1173606.00	1.737
1,3-Dichlorobenzene	2.00	63640.0000	1.048	5.00	165089.000	1.051	20.0	740322.000	1.096
1,3-Dichloropropane	2.00	26206.0000	0.2797	5.00	67902.0000	0.2874	20.0	302830.000	0.2996
1,4-Dichlorobenzene	2.00	69062.0000	1.138	5.00	174231.000	1.109	20.0	766760.000	1.135
2,2-Dichloropropane	2.00	39147.0000	0.3364	5.00	97828.0000	0.3349	20.0	445133.000	0.3600
2-Butanone	NA	NA	NA	5.00	20194.0000	0.06910	20.0	75959.0000	0.06140
2-Chloroethyl Vinyl Ether	2.00	9128.00000	0.07850	5.00	25269.0000	0.08650	20.0	122112.000	0.09880
2-Chlorotoluene	2.00	89543.0000	1.475	5.00	222939.000	1.419	20.0	1061811.00	1.572
2-Hexanone	NA	NA	NA	5.00	22703.0000	0.09610	20.0	115637.000	0.1144
4-Chlorotoluene	2.00	96837.0000	1.595	5.00	250005.000	1.592	20.0	1089927.00	1.613
4-Methyl-2-Pentanone	NA	NA	NA	5.00	13534.0000	0.04630	20.0	72101.0000	0.05830
Acetone	NA	NA	NA	5.00	13454.0000	0.04610	20.0	59815.0000	0.04840
Benzene	2.00	83672.0000	0.7191	5.00	206735.000	0.7077	20.0	901742.000	0.7293
Bromobenzene	2.00	29930.0000	0.4931	5.00	78089.0000	0.4971	20.0	347300.000	0.5141
Bromochloromethane	2.00	14623.0000	0.1257	5.00	35431.0000	0.1213	20.0	158061.000	0.1278
Bromodichloromethane	2.00	32483.0000	0.2792	5.00	81280.0000	0.2782	20.0	367372.000	0.2971
Bromomethane	2.00	11919.0000	0.1024	5.00	35823.0000	0.1226	20.0	177318.000	0.1434
Carbon Disulfide	2.00	68704.0000	0.5905	5.00	180765.000	0.6188	20.0	774991.000	0.6268
Carbon Tetrachloride	2.00	40173.0000	0.3453	5.00	98115.0000	0.3359	20.0	454761.000	0.3678

INT_CAL - Modified 03/06/2008
PDF File ID: 1251122
Report generated 11/20/2008 10:12

Microbac®

Microbac Laboratories Inc.

INITIAL CALIBRATION DATA

00078274

Login Number: L08100867

Analytical Method: 8260B

Instrument ID: HPMS6

Initial Calibration Date: 28-OCT-08 21:12

Column ID: F

Analyte	WG286204-08			WG286204-09			WG286204-10		
	CONC	RESP	RF	CONC	RESP	RF	CONC	RESP	RF
1,1-Dichloroethene	50.0	1401757.00	0.4287	100	2932418.00	0.4204	200	5940205.00	0.4011
1,2-Dichloropropane	50.0	763364.000	0.2335	100	1628734.00	0.2335	200	3380598.00	0.2283
Chloroform	50.0	1358607.00	0.4155	100	2889606.00	0.4143	200	5803391.00	0.3919
Ethylbenzene	50.0	993929.000	0.3720	100	2174344.00	0.3704	200	4471362.00	0.3495
Toluene	50.0	2631505.00	0.9849	100	5581639.00	0.9508	200	9959209.00	0.7784
Vinyl Chloride	50.0	616569.000	0.1886	100	1143199.00	0.1639	NA	NA	NA
1,1,2,2-Tetrachloroethane	50.0	560311.000	0.3089	100	1282999.00	0.3300	200	2478954.00	0.3079
1,1-Dichloroethane	50.0	1614287.00	0.4937	100	3410611.00	0.4890	200	6826331.00	0.4610
Bromoform	50.0	454843.000	0.1702	100	1027040.00	0.1750	200	2087677.00	0.1632
Chlorobenzene	50.0	1977636.00	0.7402	100	4287902.00	0.7304	200	8161035.00	0.6379
Chloromethane	50.0	770356.000	0.2356	100	1652729.00	0.2370	200	3442158.00	0.2325
1,1,1,2-Tetrachloroethane	50.0	768837.000	0.2878	100	1708390.00	0.2910	200	3560287.00	0.2783
1,1,1-Trichloroethane	50.0	1271787.00	0.3889	100	2705437.00	0.3879	200	5649031.00	0.3815
1,1,2-Trichloroethane	50.0	464508.000	0.1739	100	1039207.00	0.1770	200	2138281.00	0.1671
1,1-Dichloropropene	50.0	917520.000	0.2806	100	1930957.00	0.2769	200	3964558.00	0.2677
1,2,3-Trichlorobenzene	50.0	1071159.00	0.5904	100	2273725.00	0.5848	200	4292775.00	0.5331
1,2,3-Trichloropropane	50.0	194841.000	0.1074	100	429453.000	0.1105	200	842956.000	0.1047
1,2,4-Trichlorobenzene	50.0	1246489.00	0.6871	100	2663705.00	0.6851	200	5080220.00	0.6309
1,2,4-Trimethylbenzene	50.0	3307402.00	1.823	100	6674744.00	1.717	200	10779312.0	1.339
1,2-Dibromo-3-Chloropropane	50.0	127727.000	0.07040	100	278844.000	0.07170	200	520096.000	0.06460
1,2-Dibromoethane	50.0	491413.000	0.1839	100	1099875.00	0.1874	200	2252466.00	0.1760
1,2-Dichlorobenzene	50.0	1798540.00	0.9914	100	3859063.00	0.9926	200	7097174.00	0.8814
1,2-Dichloroethane	50.0	1234714.00	0.3776	100	2560842.00	0.3672	200	4950839.00	0.3343
1,3,5-Trimethylbenzene	50.0	3101785.00	1.710	100	6360259.00	1.636	200	10662553.0	1.324
1,3-Dichlorobenzene	50.0	1960303.00	1.081	100	4169841.00	1.073	200	7709589.00	0.9575
1,3-Dichloropropane	50.0	819295.000	0.3066	100	1814332.00	0.3091	200	3713554.00	0.2902
1,4-Dichlorobenzene	50.0	2043010.00	1.126	100	4279345.00	1.101	200	7718416.00	0.9586
2,2-Dichloropropane	50.0	1139004.00	0.3483	100	2465912.00	0.3536	200	5082856.00	0.3432
2-Butanone	50.0	213511.000	0.06530	100	484742.000	0.06950	200	961087.000	0.06490
2-Chloroethyl Vinyl Ether	50.0	351405.000	0.1075	100	795619.000	0.1141	200	1613973.00	0.1090
2-Chlorotoluene	50.0	2935770.00	1.618	100	5614180.00	1.444	200	10464532.0	1.300
2-Hexanone	50.0	334888.000	0.1253	100	779068.000	0.1327	200	1481926.00	0.1158
4-Chlorotoluene	50.0	2723867.00	1.501	100	5877951.00	1.512	200	8856943.00	1.100
4-Methyl-2-Pentanone	50.0	207388.000	0.06340	100	479206.000	0.06870	200	969893.000	0.06550
Acetone	50.0	148301.000	0.04540	100	319879.000	0.04590	200	649975.000	0.04390
Benzene	50.0	2337723.00	0.7149	100	4980178.00	0.7140	200	9348634.00	0.6313
Bromobenzene	50.0	929578.000	0.5124	100	2033242.00	0.5230	200	4171261.00	0.5180
Bromochloromethane	50.0	421833.000	0.1290	100	899325.000	0.1289	200	1844727.00	0.1246
Bromodichloromethane	50.0	968411.000	0.2962	100	2098453.00	0.3009	200	4298086.00	0.2903
Bromomethane	50.0	514734.000	0.1574	100	1184097.00	0.1698	NA	NA	NA
Carbon Disulfide	50.0	2079366.00	0.6359	100	4313427.00	0.6184	200	8679229.00	0.5861
Carbon Tetrachloride	50.0	1148444.00	0.3512	100	2424780.00	0.3477	200	5074276.00	0.3427

INT_CAL - Modified 03/06/2008
PDF File ID: 1251122
Report generated 11/20/2008 10:12

Microbac®

Microbac Laboratories Inc.
INITIAL CALIBRATION DATA

00078275

Login Number: L08100867
Analytical Method: 8260B

Instrument ID: HPMS6
Initial Calibration Date: 28-OCT-08 21:12
Column ID: F

Analyte	WG286204-11		
	CONC	RESP	RF
1,1-Dichloroethene	NA	NA	NA
1,2-Dichloropropane	NA	NA	NA
Chloroform	NA	NA	NA
Ethylbenzene	NA	NA	NA
Toluene	NA	NA	NA
Vinyl Chloride	NA	NA	NA
1,1,2,2-Tetrachloroethane	NA	NA	NA
1,1-Dichloroethane	NA	NA	NA
Bromoform	NA	NA	NA
Chlorobenzene	NA	NA	NA
Chloromethane	NA	NA	NA
1,1,1,2-Tetrachloroethane	NA	NA	NA
1,1,1-Trichloroethane	NA	NA	NA
1,1,2-Trichloroethane	NA	NA	NA
1,1-Dichloropropene	NA	NA	NA
1,2,3-Trichlorobenzene	NA	NA	NA
1,2,3-Trichloropropane	NA	NA	NA
1,2,4-Trichlorobenzene	NA	NA	NA
1,2,4-Trimethylbenzene	NA	NA	NA
1,2-Dibromo-3-Chloropropane	NA	NA	NA
1,2-Dibromoethane	NA	NA	NA
1,2-Dichlorobenzene	NA	NA	NA
1,2-Dichloroethane	NA	NA	NA
1,3,5-Trimethylbenzene	NA	NA	NA
1,3-Dichlorobenzene	NA	NA	NA
1,3-Dichloropropane	NA	NA	NA
1,4-Dichlorobenzene	NA	NA	NA
2,2-Dichloropropane	NA	NA	NA
2-Butanone	300	1484832.00	0.06610
2-Chloroethyl Vinyl Ether	NA	NA	NA
2-Chlorotoluene	NA	NA	NA
2-Hexanone	300	2419922.00	0.1288
4-Chlorotoluene	NA	NA	NA
4-Methyl-2-Pentanone	300	1517087.00	0.06760
Acetone	300	907068.000	0.04040
Benzene	NA	NA	NA
Bromobenzene	NA	NA	NA
Bromochloromethane	NA	NA	NA
Bromodichloromethane	NA	NA	NA
Bromomethane	NA	NA	NA
Carbon Disulfide	NA	NA	NA
Carbon Tetrachloride	NA	NA	NA

INT_CAL - Modified 03/06/2008
PDF File ID: 1251122
Report generated 11/20/2008 10:12

Microbac Laboratories Inc.

INITIAL CALIBRATION DATA

00078276

Login Number: L08100867

Analytical Method: 8260B

Instrument ID: HPMS6

Initial Calibration Date: 28-OCT-08 21:12

Column ID: F

Analyte	WG286204-02			WG286204-03			WG286204-04		
	CONC	RESP	RF	CONC	RESP	RF	CONC	RESP	RF
Chloroethane	NA	NA	NA	NA	NA	NA	1.00	10346.0000	0.1815
Dibromochloromethane	NA	NA	NA	0.400	3657.00000	0.1935	1.00	11262.0000	0.2428
Dibromomethane	NA	NA	NA	0.400	1974.00000	0.08570	1.00	7022.00000	0.1232
Dichlorodifluoromethane	NA	NA	NA	NA	NA	NA	1.00	16506.0000	0.2895
Hexachlorobutadiene	NA	NA	NA	0.400	2995.00000	0.2450	1.00	9981.00000	0.3331
Isopropylbenzene	NA	NA	NA	0.400	13479.0000	0.7132	1.00	56247.0000	1.212
Methylene Chloride	NA	NA	NA	0.400	11381.0000	0.4938	1.00	19399.0000	0.3403
Naphthalene	NA	NA	NA	0.400	10787.0000	0.8824	1.00	33139.0000	1.106
Styrene	NA	NA	NA	0.400	9213.00000	0.4875	1.00	33884.0000	0.7304
Tetrachloroethene	NA	NA	NA	0.400	3273.00000	0.1732	1.00	14532.0000	0.3132
Trichloroethene	NA	NA	NA	0.400	3187.00000	0.1383	1.00	12824.0000	0.2250
Trichlorofluoromethane	NA	NA	NA	0.400	5486.00000	0.2380	1.00	28860.0000	0.5063
Vinyl Acetate	NA	NA	NA	NA	NA	NA	NA	NA	NA
cis-1,2-Dichloroethene	NA	NA	NA	0.400	3442.00000	0.1493	1.00	12275.0000	0.2153
cis-1,3-Dichloropropene	NA	NA	NA	0.400	5004.00000	0.2171	1.00	16070.0000	0.2819
m-,p-Xylene	NA	NA	NA	0.800	11751.0000	0.3109	2.00	46133.0000	0.4972
n-Butylbenzene	NA	NA	NA	NA	NA	NA	1.00	56276.0000	1.878
n-Propylbenzene	NA	NA	NA	0.400	18161.0000	1.486	1.00	71036.0000	2.371
o-Xylene	NA	NA	NA	0.400	5521.00000	0.2921	1.00	20062.0000	0.4324
p-Isopropyltoluene	NA	NA	NA	NA	NA	NA	1.00	56833.0000	1.897
sec-Butylbenzene	NA	NA	NA	NA	NA	NA	1.00	62510.0000	2.086
tert-Butylbenzene	NA	NA	NA	NA	NA	NA	1.00	11566.0000	0.3860
trans-1,2-Dichloroethene	NA	NA	NA	0.400	3372.00000	0.1463	1.00	12190.0000	0.2138
trans-1,3-Dichloropropene	NA	NA	NA	0.400	4211.00000	0.2228	1.00	14257.0000	0.3073

INT_CAL - Modified 03/06/2008
PDF File ID: 1251122
Report generated 11/20/2008 10:12

Microbac®

Microbac Laboratories Inc.

INITIAL CALIBRATION DATA

00078277

Login Number: L08100867

Analytical Method: 8260B

Instrument ID: HPMS6

Initial Calibration Date: 28-OCT-08 21:12

Column ID: F

Analyte	WG286204-05			WG286204-06			WG286204-07		
	CONC	RESP	RF	CONC	RESP	RF	CONC	RESP	RF
Chloroethane	2.00	18938.0000	0.1628	5.00	48409.0000	0.1657	20.0	217153.000	0.1756
Dibromochloromethane	2.00	21938.0000	0.2342	5.00	54846.0000	0.2321	20.0	255772.000	0.2530
Dibromomethane	2.00	13205.0000	0.1135	5.00	31644.0000	0.1083	20.0	140682.000	0.1138
Dichlorodifluoromethane	2.00	29065.0000	0.2498	5.00	68745.0000	0.2353	20.0	305342.000	0.2469
Hexachlorobutadiene	2.00	17693.0000	0.2915	5.00	41935.0000	0.2670	20.0	192603.000	0.2851
Isopropylbenzene	2.00	101679.000	1.085	5.00	276527.000	1.170	20.0	1285890.00	1.272
Methylene Chloride	2.00	27181.0000	0.2336	5.00	56461.0000	0.1933	20.0	232413.000	0.1880
Naphthalene	2.00	63413.0000	1.045	5.00	172270.000	1.097	20.0	820021.000	1.214
Styrene	2.00	65623.0000	0.7005	5.00	174660.000	0.7391	20.0	821342.000	0.8125
Tetrachloroethene	2.00	25147.0000	0.2684	5.00	61945.0000	0.2621	20.0	281337.000	0.2783
Trichloroethene	2.00	23539.0000	0.2023	5.00	57558.0000	0.1970	20.0	266066.000	0.2152
Trichlorofluoromethane	2.00	53371.0000	0.4587	5.00	125269.000	0.4288	20.0	577242.000	0.4668
Vinyl Acetate	NA	NA	NA	5.00	90738.0000	0.3106	20.0	376274.000	0.3043
cis-1,2-Dichloroethene	2.00	23129.0000	0.1988	5.00	59389.0000	0.2033	20.0	275246.000	0.2226
cis-1,3-Dichloropropene	2.00	30566.0000	0.2627	5.00	77447.0000	0.2651	20.0	366521.000	0.2964
m-,p-Xylene	4.00	81597.0000	0.4355	10.0	212318.000	0.4493	40.0	975622.000	0.4826
n-Butylbenzene	2.00	99504.0000	1.639	5.00	267876.000	1.705	20.0	1229301.00	1.820
n-Propylbenzene	2.00	137688.000	2.268	5.00	361044.000	2.298	20.0	1663802.00	2.463
o-Xylene	2.00	39883.0000	0.4257	5.00	103104.000	0.4363	20.0	471195.000	0.4661
p-Isopropyltoluene	2.00	106844.000	1.760	5.00	281461.000	1.792	20.0	1340306.00	1.984
sec-Butylbenzene	2.00	119155.000	1.963	5.00	309887.000	1.973	20.0	1444398.00	2.138
tert-Butylbenzene	2.00	22505.0000	0.3708	5.00	59021.0000	0.3757	20.0	262215.000	0.3881
trans-1,2-Dichloroethene	2.00	22264.0000	0.1913	5.00	54581.0000	0.1868	20.0	255557.000	0.2067
trans-1,3-Dichloropropene	2.00	29194.0000	0.3116	5.00	76102.0000	0.3221	20.0	358985.000	0.3551

INT_CAL - Modified 03/06/2008
PDF File ID: 1251122
Report generated 11/20/2008 10:12

Microbac®

Microbac Laboratories Inc.

INITIAL CALIBRATION DATA

00078278

Login Number: L08100867

Analytical Method: 8260B

Instrument ID: HPMS6

Initial Calibration Date: 28-OCT-08 21:12

Column ID: F

Analyte	WG286204-08			WG286204-09			WG286204-10		
	CONC	RESP	RF	CONC	RESP	RF	CONC	RESP	RF
Chloroethane	50.0	586938.000	0.1795	100	1240986.00	0.1779	200	2502091.00	0.1690
Dibromochloromethane	50.0	711749.000	0.2664	100	1590702.00	0.2710	200	3305859.00	0.2584
Dibromomethane	50.0	374381.000	0.1145	100	814797.000	0.1168	200	1646886.00	0.1112
Dichlorodifluoromethane	50.0	724609.000	0.2216	100	1438486.00	0.2062	200	2779483.00	0.1877
Hexachlorobutadiene	50.0	489725.000	0.2699	100	1065653.00	0.2741	200	2189959.00	0.2720
Isopropylbenzene	50.0	3352348.00	1.255	100	6857511.00	1.168	200	11517538.0	0.9002
Methylene Chloride	50.0	631802.000	0.1932	100	1387265.00	0.1989	200	2885516.00	0.1949
Naphthalene	50.0	2250622.00	1.241	100	4727163.00	1.216	200	7987909.00	0.9920
Styrene	50.0	2217041.00	0.8298	100	4781846.00	0.8146	200	8815301.00	0.6890
Tetrachloroethene	50.0	702550.000	0.2629	100	1523749.00	0.2596	200	3149697.00	0.2462
Trichloroethene	50.0	696153.000	0.2129	100	1501475.00	0.2153	200	3133787.00	0.2116
Trichlorofluoromethane	50.0	1401902.00	0.4287	100	2961706.00	0.4246	200	5953892.00	0.4021
Vinyl Acetate	50.0	968633.000	0.2962	100	1977467.00	0.2835	200	3958079.00	0.2673
cis-1,2-Dichloroethene	50.0	731099.000	0.2236	100	1582237.00	0.2269	200	3237814.00	0.2187
cis-1,3-Dichloropropene	50.0	1003316.00	0.3068	100	2209915.00	0.3169	200	4532163.00	0.3061
m-,p-Xylene	100	2565240.00	0.4801	200	5352233.00	0.4559	400	9607876.00	0.3755
n-Butylbenzene	50.0	3195296.00	1.761	100	6399037.00	1.646	200	10332808.0	1.283
n-Propylbenzene	50.0	4289191.00	2.364	100	8210343.00	2.112	200	12625278.0	1.568
o-Xylene	50.0	1255300.00	0.4698	100	2714205.00	0.4623	200	5582450.00	0.4363
p-Isopropyltoluene	50.0	3524332.00	1.943	100	7129046.00	1.834	200	11422478.0	1.419
sec-Butylbenzene	50.0	3740798.00	2.062	100	7511711.00	1.932	200	12110563.0	1.504
tert-Butylbenzene	50.0	691803.000	0.3813	100	1491555.00	0.3836	200	3121538.00	0.3877
trans-1,2-Dichloroethene	50.0	669792.000	0.2048	100	1445699.00	0.2073	200	2988288.00	0.2018
trans-1,3-Dichloropropene	50.0	992468.000	0.3715	100	2168703.00	0.3694	200	4350150.00	0.3400

INT_CAL - Modified 03/06/2008
PDF File ID: 1251122
Report generated 11/20/2008 10:12

Microbac®

Microbac Laboratories Inc.

INITIAL CALIBRATION DATA

00078279

Login Number: L08100867

Analytical Method: 8260B

Instrument ID: HPMS6

Initial Calibration Date: 28-OCT-08 21:12

Column ID: F

Analyte	WG286204-11		
	CONC	RESP	RF
Chloroethane	NA	NA	NA
Dibromochloromethane	NA	NA	NA
Dibromomethane	NA	NA	NA
Dichlorodifluoromethane	NA	NA	NA
Hexachlorobutadiene	NA	NA	NA
Isopropylbenzene	NA	NA	NA
Methylene Chloride	NA	NA	NA
Naphthalene	NA	NA	NA
Styrene	NA	NA	NA
Tetrachloroethene	NA	NA	NA
Trichloroethene	NA	NA	NA
Trichlorofluoromethane	NA	NA	NA
Vinyl Acetate	NA	NA	NA
cis-1,2-Dichloroethene	NA	NA	NA
cis-1,3-Dichloropropene	NA	NA	NA
m-,p-Xylene	NA	NA	NA
n-Butylbenzene	NA	NA	NA
n-Propylbenzene	NA	NA	NA
o-Xylene	NA	NA	NA
p-Isopropyltoluene	NA	NA	NA
sec-Butylbenzene	NA	NA	NA
tert-Butylbenzene	NA	NA	NA
trans-1,2-Dichloroethene	NA	NA	NA
trans-1,3-Dichloropropene	NA	NA	NA

INT_CAL - Modified 03/06/2008
PDF File ID: 1251122
Report generated 11/20/2008 10:12

Microbac®

Calibration Table Report
Method: 8260WT.M
Title: Method 8260B/624 Water Analysis 10/10/08 HPMS 14
Last Calibration: Fri Oct 10 23:59:04 2008
Curve: WG284610
Calibration Files

Compound	0.3 14M08688.D	0.4 14M08689.D	1 14M08690.D	2 14M08691.D	5 14M08692.D	20 14M08693.D	50 14M08694.D	100 14M08695.D	200 14M08696.D	300 14M08697.D	Avg	%RSD	Linear	Quadratic
Fluorobenzene	ISTD													
Dichlorodifluoromethane			0.234	0.200	0.198	0.218	0.252	0.239			0.223	9.843		
Chloromethane			0.187	0.145	0.159	0.148	0.159	0.167	0.183		0.164	9.780		
Vinyl Chloride		0.146	0.149	0.115	0.123	0.127	0.126	0.101			0.127	13.214		
1,3-Butadiene				0.042	0.026	0.022	0.022	0.051	0.046		0.035	36.955		0.978
Bromomethane			0.073	0.069	0.071	0.088	0.112	0.112	0.119		0.092	23.932	0.999	
Chloroethane			0.111	0.100	0.122	0.120	0.118	0.109	0.106		0.112	7.037		
Trichlorofluoromethane		0.210	0.328	0.274	0.316	0.367	0.432	0.410	0.361		0.337	21.427		1.000
Diethyl ether			0.116	0.111	0.137	0.126	0.117	0.121			0.121	7.543		
Isoprene					0.257	0.248	0.302	0.283	0.276		0.273	7.821		
Acrolein				0.044	0.006	0.007	0.008	0.011	0.011		0.015	98.834	0.993	
1,1,2-Trichloro-1,2,2-Trifluoroe			0.178	0.153	0.171	0.187	0.224	0.214	0.185		0.187	13.131		
Acetone					0.027	0.029	0.027	0.028	0.028	0.024	0.027	6.043		
1,1-Dichloroethene		0.202	0.254	0.224	0.274	0.282	0.319	0.314	0.298		0.271	15.460		1.000
Tert-Butyl Alcohol			0.008	0.007	0.009	0.010	0.008	0.009			0.008	14.009		
Dimethyl Sulfide					0.238	0.230	0.230	0.231	0.238		0.233	1.768		
Iodomethane				0.064	0.107	0.171	0.223	0.211	0.212		0.165	39.621		0.999
Methyl acetate				0.063	0.076	0.073	0.070	0.081	0.083		0.074	10.077		
Methylene Chloride		0.407	0.253	0.193	0.193	0.176	0.165	0.164	0.163		0.214	38.836		1.000
Carbon Disulfide			0.540	0.516	0.591	0.573	0.635	0.608	0.617		0.583	7.358		
Acrylonitrile					0.032	0.036	0.033	0.038	0.038	0.033	0.035	7.327		
Methyl Tert Butyl Ether		0.379	0.406	0.357	0.459	0.435	0.411	0.435	0.442		0.415	8.228		
trans-1,2-Dichloroethene		0.136	0.155	0.142	0.185	0.187	0.195	0.195	0.198		0.174	14.708		
n-Hexane					0.284	0.267	0.332	0.307	0.253		0.289	10.853		
Diisopropyl ether			0.642	0.638	0.684	0.639	0.593	0.566			0.627	6.617		
Vinyl Acetate				0.148	0.177	0.194	0.145	0.152	0.124		0.156	15.940		0.998
1,1-Dichloroethane		0.320	0.319	0.290	0.372	0.372	0.375	0.372	0.369		0.349	9.616		
Ethyl-Tert-Butyl ether			0.609	0.592	0.663	0.626	0.571	0.572			0.606	5.883		
2-Butanone					0.043	0.042	0.035	0.039	0.037	0.038	0.039	7.463		
Propionitrile				0.009	0.013	0.013	0.011	0.013			0.012	13.408		
2,2-Dichloropropane		0.209	0.266	0.244	0.316	0.329	0.333	0.327	0.322		0.293	16.052		1.000
cis-1,2-Dichloroethene		0.183	0.173	0.153	0.202	0.207	0.207	0.209	0.213		0.193	11.144		
Chloroform	0.891	0.378	0.339	0.307	0.387	0.396	0.388	0.382	0.377		0.427	41.282		
Bromochloromethane		0.080	0.092	0.085	0.108	0.107	0.099	0.098	0.101		0.096	10.366		
Tetrahydrofuran			0.026	0.019	0.025	0.025	0.021	0.024			0.023	10.527		
Dibromofluoromethane					0.197	0.202	0.213	0.217	0.215		0.209	4.283		
1,1,1-Trichloroethane		0.299	0.342	0.318	0.396	0.406	0.405	0.386	0.363		0.364	11.197		
Cyclohexane			0.318	0.308	0.313	0.307	0.372	0.347	0.305		0.324	7.868		
1,1-Dichloropropene			0.263	0.243	0.292	0.298	0.304	0.292	0.277		0.281	7.761		
Carbon Tetrachloride		0.213	0.296	0.273	0.348	0.355	0.366	0.338	0.324		0.314	16.290		1.000
Tert-Amyl-Methyl ether			0.463	0.443	0.497	0.469	0.423	0.435		0.297	0.432	14.963		
1,2-Dichloroethane-d4					0.235	0.22	0.211	0.217	0.202		0.21679	5.75002		
1,2-Dichloroethane		0.221	0.241	0.223	0.291	0.294	0.262	0.269	0.252		0.25666	10.7847		
Benzene		0.773	0.75	0.679	0.815	0.829	0.795	0.769	0.752		0.77029	6.01199		
Trichloroethene		0.213	0.22	0.194	0.235	0.245	0.242	0.234	0.229		0.22661	7.39614		
Methylcyclohexane					0.315	0.316	0.393	0.375	0.324		0.34481	10.6851		
1,2-Dichloropropane		0.19	0.191	0.166	0.213	0.216	0.198	0.197	0.19		0.19528	8.00766		
1,4-Dioxane				0	0	0.001	0.001	0.001		0	0.00047	26.1405		0.979
Bromodichloromethane		0.251	0.243	0.229	0.296	0.311	0.287	0.288	0.277		0.27291	10.4309		
Dibromomethane		0.075	0.083	0.075	0.098	0.102	0.091	0.096	0.086		0.08835	11.3808		
2-Chloroethyl Vinyl Ether					0.009	0.013	0.013	0.017	0.02		0.01439	27.4629	0.991	
4-Methyl-2-Pentanone					0.04	0.041	0.036	0.042	0.038	0.041	0.03974	5.17437		
cis-1,3-Dichloropropene		0.233	0.258	0.235	0.308	0.327	0.299	0.302	0.291		0.28163	12.4319		
Dimethyl Disulfide					0.138	0.16	0.166	0.175	0.179		0.16374	9.74377		
Chlorobenzene-d5	ISTD													
Toluene-d8			0.948	0.999	0.878	0.935	0.99	0.984	0.962		0.95646	4.33212		
Toluene		1.07	1.147	1.132	1.283	1.231	1.171	1.139	1.064		1.15455	6.43637		
Ethyl Methacrylate					0.228	0.231	0.216	0.23	0.225		0.22591	2.77354		
trans-1,3-Dichloropropene		0.251	0.296	0.277	0.362	0.388	0.352	0.347	0.333		0.32584	14.3035		
1,1,2-Trichloroethane		0.147	0.166	0.147	0.183	0.184	0.165	0.167	0.159		0.16483	8.41343		
2-Hexanone					0.08	0.085	0.075	0.084	0.077	0.083	0.08065	5.17819		
1,3-Dichloropropane		0.283	0.293	0.275	0.33	0.332	0.295	0.294	0.28		0.29778	7.26723		
Tetrachloroethene		0.268	0.324	0.283	0.321	0.331	0.335	0.323	0.297		0.31027	7.86636		
Dibromochloromethane		0.217	0.221	0.215	0.268	0.289	0.265	0.266	0.253		0.24927	11.3144		
1,2-Dibromoethane		0.148	0.16	0.149	0.185	0.19	0.171	0.175	0.169		0.16828	9.16227		
1-Chlorohexane		0.36	0.377	0.373	0.388	0.387	0.428	0.404	0.385		0.38785	5.37297		
Chlorobenzene		0.798	0.777	0.709	0.804	0.814	0.757	0.722	0.64		0.75271	7.87153		
1,1,1,2-Tetrachloroethane		0.277	0.286	0.262	0.316	0.321	0.29	0.264	0.218		0.27945	11.6832		
Ethylbenzene		0.386	0.426	0.38	0.444	0.454	0.437	0.405	0.351		0.41042	8.75064		
m-,p-Xylene		0.464	0.476	0.444	0.508	0.528	0.509	0.48	0.42		0.47861	7.52982		
o-Xylene			0.434	0.408	0.483	0.507	0.494	0.483	0.458		0.46676	7.56391		
Styrene			0.667	0.65	0.803	0.847	0.815	0.81	0.765		0.7655	10.0627		
Bromoform			0.11	0.111	0.139	0.154	0.141	0.154	0.146		0.13654	13.6639		
Isopropylbenzene			1.262	1.159	1.355	1.398	1.388	1.327	1.229		1.30262	6.83053		
1,4-Dichlorobenzene-d4	ISTD													
1,1,2,2-Tetrachloroethane		0.313	0.376	0.325	0.397	0.401	0.341	0.352	0.325		0.35374	9.62568		
p-Bromofluorobenzene				0.945	0.862	0.863	0.88	0.83	0.792		0.86183	5.95326		
1,2,3-Trichloropropane			0.125	0.113	0.141	0.144	0.124	0.127	0.115		0.12696	9.24927		
trans-1,4-Dichloro-2-Butene				0.056	0.078	0.094	0.1	0.108	0.106		0.09014	22.0008		1.000

n-Propylbenzene			2.842	2.647	3.06	3.206	3.251	2.959	2.738	2.9576	7.75972
Bromobenzene	0.684	0.662	0.689	0.636	0.734	0.744	0.69	0.654	0.61	0.67806	6.39974
1,3,5-Trimethylbenzene			1.65	1.57	1.786	1.864	1.909	1.795	1.715	1.7557	6.78244
2-Chlorotoluene		2.101	2.158	1.992	2.315	2.435	2.353	2.123	1.944	2.17754	8.03832
4-Chlorotoluene		1.734	1.737	1.612	1.83	1.8	1.762	1.644	1.543	1.70777	5.78881
a-Methylstyrene					1.15	1.212	1.292	1.221	1.208	1.21662	4.13138
tert-Butylbenzene			0.415	0.415	0.456	0.465	0.475	0.443	0.417	0.44082	5.78916
1,2,4-Trimethylbenzene			1.575	1.489	1.688	1.747	1.77	1.684	1.627	1.65411	5.96223
sec-Butylbenzene			2.462	2.29	2.559	2.669	2.804	2.628	2.436	2.54977	6.6612
p-Isopropyltoluene			1.812	1.723	1.948	2.066	2.185	2.081	1.961	1.96813	8.1386
1,3-Dichlorobenzene		1.211	1.229	1.127	1.281	1.332	1.282	1.229	1.167	1.23212	5.38353
1,4-Dichlorobenzene	1.467	1.261	1.223	1.104	1.262	1.294	1.251	1.2	1.139	1.24468	8.33236
n-Butylbenzene			1.407	1.304	1.446	1.552	1.673	1.625	1.552	1.50848	8.58192
1,2-Dichlorobenzene	1.156	1.067	1.038	0.975	1.112	1.144	1.084	1.061	1.01	1.0719	5.57116
1,2-Dibromo-3-Chloropropane				0.06	0.071	0.076	0.069	0.072	0.068	0.06937	8.10948
1,2,4-Trichlorobenzene		0.508	0.455	0.414	0.469	0.498	0.483	0.499	0.504	0.47883	6.6606
Hexachlorobutadiene		0.318	0.356	0.328	0.372	0.374	0.401	0.395	0.362	0.36342	8.02798
Naphthalene			0.531	0.486	0.557	0.598	0.569	0.622	0.635	0.57106	9.17453
1,2,3-Trichlorobenzene	0.546	0.382	0.368	0.348	0.394	0.402	0.387	0.405	0.405	0.40412	13.932

Sat Oct 11 01:23:02 2008

Microbac Laboratories Inc.
ALTERNATE SOURCE CALIBRATION REPORT

00078282

Login Number: L08100867 Run Date: 11/03/2008 Sample ID: WG286813-12
Instrument ID: HPMS11 Run Time: 21:57 Method: 8260B
File ID: 11M54923 Analyst: WTD QC Key: STD
ICal Workgroup: WG286813 Cal ID: HPMS11 - 03-NOV-08

Analyte		Expected	Found	Units	RF	%D	UCL	Q
Chloroform	CCC	20.0	21.3	ug/L	0.429	6.70	30	
1,1-Dichloroethene	CCC	20.0	20.0	ug/L	0.359	0.100	30	
1,2-Dichloropropane	CCC	20.0	20.6	ug/L	0.200	3.20	30	
Ethylbenzene	CCC	20.0	21.4	ug/L	0.454	6.90	30	
Toluene	CCC	20.0	20.2	ug/L	1.19	0.900	30	
Vinyl Chloride	CCC	20.0	24.9	ug/L	0.202	24.4	30	
Bromoform	SPCC	20.0	17.5	ug/L	0.130	12.5	30	
Chlorobenzene	SPCC	20.0	20.6	ug/L	0.808	2.90	30	
Chloromethane	SPCC	20.0	14.5	ug/L	0.0942	27.4	30	*
1,1-Dichloroethane	SPCC	20.0	19.8	ug/L	0.392	0.900	30	
1,1,2,2-Tetrachloroethane	SPCC	20.0	21.6	ug/L	0.382	8.00	30	
Acetone		20.0	14.3	ug/L	0.0386	28.4	30	
Benzene		20.0	19.8	ug/L	0.834	1.10	30	
Bromobenzene		20.0	20.8	ug/L	0.627	3.80	30	
Bromochloromethane		20.0	21.8	ug/L	0.135	9.00	30	
Bromodichloromethane		20.0	21.6	ug/L	0.303	7.80	30	
Bromomethane		20.0	26.9	ug/L	0.132	34.3	30	*
2-Butanone		20.0	19.4	ug/L	0.0511	3.00	30	
n-Butylbenzene		20.0	21.3	ug/L	2.03	6.40	30	
sec-Butylbenzene		20.0	21.7	ug/L	2.66	8.60	30	
tert-Butylbenzene		20.0	21.2	ug/L	0.450	6.20	30	
Carbon Disulfide		20.0	19.2	ug/L	0.599	4.20	30	
Carbon Tetrachloride		20.0	21.1	ug/L	0.313	5.30	30	
Dibromochloromethane		20.0	18.7	ug/L	0.252	6.60	30	
Chloroethane		20.0	22.4	ug/L	0.135	11.9	30	
2-Chloroethyl Vinyl Ether		20.0	16.8	ug/L	0.0643	15.8	30	
2-Chlorotoluene		20.0	22.1	ug/L	2.13	10.6	30	
4-Chlorotoluene		20.0	18.2	ug/L	1.67	9.00	30	
1,2-Dibromo-3-Chloropropane		20.0	18.5	ug/L	0.0782	7.40	30	
1,2-Dibromoethane		20.0	21.3	ug/L	0.207	6.70	30	
Dibromomethane		20.0	21.0	ug/L	0.111	5.10	30	
1,2-Dichlorobenzene		20.0	20.8	ug/L	1.13	4.20	30	
1,3-Dichlorobenzene		20.0	20.6	ug/L	1.21	3.10	30	
1,4-Dichlorobenzene		20.0	19.8	ug/L	1.23	1.00	30	
Dichlorodifluoromethane		20.0	27.4	ug/L	0.287	36.8	30	*
1,2-Dichloroethane		20.0	20.1	ug/L	0.311	0.500	30	
cis-1,2-Dichloroethene		20.0	20.5	ug/L	0.236	2.40	30	
trans-1,2-Dichloroethene		20.0	19.7	ug/L	0.217	1.40	30	
1,3-Dichloropropane		20.0	20.5	ug/L	0.363	2.60	30	
2,2-Dichloropropane		20.0	16.4	ug/L	0.276	17.9	30	
cis-1,3-Dichloropropene		20.0	20.7	ug/L	0.321	3.70	30	
trans-1,3-Dichloropropene		20.0	15.6	ug/L	0.316	22.2	30	

ALT - Modified 09/06/2007
Version 1.5 PDF File ID: 1251123
Report generated 11/20/2008 10:12

Microbac®

Microbac Laboratories Inc.
ALTERNATE SOURCE CALIBRATION REPORT

00078283

Login Number: L08100867 Run Date: 11/03/2008 Sample ID: WG286813-12
Instrument ID: HPMS11 Run Time: 21:57 Method: 8260B
File ID: 11M54923 Analyst: WTD QC Key: STD
ICal Workgroup: WG286813 Cal ID: HPMS11 - 03-NOV-08

Analyte		Expected	Found	Units	RF	%D	UCL	Q
1,1-Dichloropropene		20.0	20.4	ug/L	0.307	2.00	30	
2-Hexanone		20.0	20.1	ug/L	0.102	0.600	30	
Hexachlorobutadiene		20.0	21.1	ug/L	0.325	5.30	30	
Isopropylbenzene		20.0	19.1	ug/L	1.26	4.30	30	
p-Isopropyltoluene		20.0	21.2	ug/L	2.27	6.10	30	
4-Methyl-2-Pentanone		20.0	21.4	ug/L	0.0535	6.80	30	
Methylene Chloride		20.0	21.1	ug/L	0.226	5.50	30	
Naphthalene		20.0	21.5	ug/L	1.64	7.30	30	
n-Propylbenzene		20.0	21.0	ug/L	2.97	5.10	30	
Styrene		20.0	21.6	ug/L	0.924	7.90	30	
1,1,1,2-Tetrachloroethane		20.0	20.4	ug/L	0.264	2.10	30	
Tetrachloroethene		20.0	21.0	ug/L	0.238	5.00	30	
1,2,3-Trichlorobenzene		20.0	20.9	ug/L	0.701	4.30	30	
1,2,4-Trichlorobenzene		20.0	20.6	ug/L	0.803	2.90	30	
1,1,1-Trichloroethane		20.0	20.5	ug/L	0.390	2.70	30	
1,1,2-Trichloroethane		20.0	21.6	ug/L	0.203	8.00	30	
Trichloroethene		20.0	19.3	ug/L	0.237	3.60	30	
Trichlorofluoromethane		20.0	21.9	ug/L	0.414	9.70	30	
1,2,3-Trichloropropane		20.0	21.1	ug/L	0.142	5.40	30	
1,2,4-Trimethylbenzene		20.0	21.6	ug/L	2.29	7.90	30	
1,3,5-Trimethylbenzene		20.0	21.5	ug/L	2.23	7.70	30	
Vinyl Acetate		20.0	31.3	ug/L	0.139	56.4	40	*
o-Xylene		20.0	21.4	ug/L	0.539	7.20	30	
m-,p-Xylene		40.0	41.5	ug/L	0.546	3.80	30	

* Exceeds %D Limit

CCC Calibration Check Compounds
SPCC System Performance Check Compounds

ALT - Modified 09/06/2007
Version 1.5 PDF File ID: 1251123
Report generated 11/20/2008 10:12

Microbac®

Microbac Laboratories Inc.
ALTERNATE SOURCE CALIBRATION REPORT

00078284

Login Number: L08100867 Run Date: 10/11/2008 Sample ID: WG284610-12
Instrument ID: HPMS14 Run Time: 03:50 Method: 8260B
File ID: 14M08708 Analyst: MDA QC Key: STD
ICal Workgroup: WG284610 Cal ID: HPMS14 - 11-OCT-08

Analyte		Expected	Found	Units	RF	%D	UCL	Q
Chloroform	CCC	20.0	22.6	ug/L	0.413	13.1	30	
1,1-Dichloroethene	CCC	20.0	20.4	ug/L	0.321	2.20	30	
1,2-Dichloropropane	CCC	20.0	21.5	ug/L	0.210	7.40	30	
Ethylbenzene	CCC	20.0	22.7	ug/L	0.466	13.5	30	
Toluene	CCC	20.0	20.9	ug/L	1.21	4.60	30	
Vinyl Chloride	CCC	20.0	25.2	ug/L	0.160	26.1	30	
Bromoform	SPCC	20.0	21.8	ug/L	0.149	9.20	30	
Chlorobenzene	SPCC	20.0	21.9	ug/L	0.823	9.30	30	
Chloromethane	SPCC	20.0	17.2	ug/L	0.141	14.2	30	
1,1-Dichloroethane	SPCC	20.0	22.8	ug/L	0.398	14.2	30	
1,1,2,2-Tetrachloroethane	SPCC	20.0	22.2	ug/L	0.393	11.2	30	
Acetone		20.0	22.6	ug/L	0.0308	13.2	30	
Benzene		20.0	21.3	ug/L	0.820	6.40	30	
Bromobenzene		20.0	21.5	ug/L	0.732	7.40	30	
Bromochloromethane		20.0	23.8	ug/L	0.115	19.0	30	
Bromodichloromethane		20.0	23.2	ug/L	0.317	16.1	30	
Bromomethane		20.0	17.4	ug/L	0.0888	12.8	30	
2-Butanone		20.0	21.9	ug/L	0.0429	9.70	30	
n-Butylbenzene		20.0	23.1	ug/L	1.74	15.7	30	
sec-Butylbenzene		20.0	22.7	ug/L	2.90	13.6	30	
tert-Butylbenzene		20.0	22.3	ug/L	0.491	11.3	30	
Carbon Disulfide		20.0	18.9	ug/L	0.551	5.50	30	
Carbon Tetrachloride		20.0	21.2	ug/L	0.379	6.10	30	
Dibromochloromethane		20.0	22.8	ug/L	0.284	14.0	30	
Chloroethane		20.0	23.0	ug/L	0.129	15.0	30	
2-Chloroethyl Vinyl Ether		20.0	26.6	ug/L	0.0168	33.2	30	*
2-Chlorotoluene		20.0	22.9	ug/L	2.49	14.3	30	
4-Chlorotoluene		20.0	21.6	ug/L	1.85	8.10	30	
1,2-Dibromo-3-Chloropropane		20.0	21.8	ug/L	0.0756	8.90	30	
1,2-Dibromoethane		20.0	22.7	ug/L	0.191	13.7	30	
Dibromomethane		20.0	23.5	ug/L	0.104	17.4	30	
1,2-Dichlorobenzene		20.0	21.7	ug/L	1.17	8.70	30	
1,3-Dichlorobenzene		20.0	21.9	ug/L	1.35	9.40	30	
1,4-Dichlorobenzene		20.0	21.1	ug/L	1.31	5.40	30	
Dichlorodifluoromethane		20.0	25.3	ug/L	0.283	26.7	30	
1,2-Dichloroethane		20.0	23.4	ug/L	0.300	16.9	30	
cis-1,2-Dichloroethene		20.0	23.0	ug/L	0.222	14.8	30	
trans-1,2-Dichloroethene		20.0	22.8	ug/L	0.198	13.9	30	
1,3-Dichloropropane		20.0	22.5	ug/L	0.335	12.4	30	
2,2-Dichloropropane		20.0	21.3	ug/L	0.351	6.50	30	
cis-1,3-Dichloropropene		20.0	22.2	ug/L	0.312	10.9	30	
trans-1,3-Dichloropropene		20.0	21.0	ug/L	0.343	5.10	30	

ALT - Modified 09/06/2007
Version 1.5 PDF File ID: 1251123
Report generated 11/20/2008 10:12

Microbac®

Microbac Laboratories Inc.
ALTERNATE SOURCE CALIBRATION REPORT

00078285

Login Number: L08100867 Run Date: 10/11/2008 Sample ID: WG284610-12
Instrument ID: HPMS14 Run Time: 03:50 Method: 8260B
File ID: 14M08708 Analyst: MDA QC Key: STD
ICal Workgroup: WG284610 Cal ID: HPMS14 - 11-OCT-08

Analyte		Expected	Found	Units	RF	%D	UCL	Q
1,1-Dichloropropene		20.0	22.1	ug/L	0.311	10.7	30	
2-Hexanone		20.0	20.8	ug/L	0.0838	3.90	30	
Hexachlorobutadiene		20.0	23.3	ug/L	0.424	16.6	30	
Isopropylbenzene		20.0	19.9	ug/L	1.30	0.400	30	
p-Isopropyltoluene		20.0	22.2	ug/L	2.18	11.0	30	
4-Methyl-2-Pentanone		20.0	19.7	ug/L	0.0392	1.50	30	
Methylene Chloride		20.0	21.9	ug/L	0.185	9.40	30	
Naphthalene		20.0	22.9	ug/L	0.655	14.7	30	
n-Propylbenzene		20.0	22.6	ug/L	3.34	13.0	30	
Styrene		20.0	22.5	ug/L	0.860	12.3	30	
1,1,1,2-Tetrachloroethane		20.0	23.0	ug/L	0.321	14.9	30	
Tetrachloroethene		20.0	22.1	ug/L	0.343	10.6	30	
1,2,3-Trichlorobenzene		20.0	22.2	ug/L	0.442	10.8	30	
1,2,4-Trichlorobenzene		20.0	22.1	ug/L	0.529	10.4	30	
1,1,1-Trichloroethane		20.0	23.3	ug/L	0.425	16.7	30	
1,1,2-Trichloroethane		20.0	22.8	ug/L	0.188	14.1	30	
Trichloroethene		20.0	21.3	ug/L	0.241	6.40	30	
Trichlorofluoromethane		20.0	20.0	ug/L	0.426	0	30	
1,2,3-Trichloropropane		20.0	22.4	ug/L	0.142	11.8	30	
1,2,4-Trimethylbenzene		20.0	23.0	ug/L	1.90	15.0	30	
1,3,5-Trimethylbenzene		20.0	23.0	ug/L	2.02	14.8	30	
Vinyl Acetate		20.0	17.9	ug/L	0.151	10.7	40	
o-Xylene		20.0	22.5	ug/L	0.525	12.4	30	
m-,p-Xylene		40.0	45.6	ug/L	0.546	14.1	30	

* Exceeds %D Limit

CCC Calibration Check Compounds
SPCC System Performance Check Compounds

ALT - Modified 09/06/2007
Version 1.5 PDF File ID: 1251123
Report generated 11/20/2008 10:12

Microbac®

Microbac Laboratories Inc.
ALTERNATE SOURCE CALIBRATION REPORT

00078286

Login Number: L08100867 Run Date: 10/28/2008 Sample ID: WG286204-12
Instrument ID: HPMS6 Run Time: 22:51 Method: 8260B
File ID: 6M79255 Analyst: CAA QC Key: STD
ICal Workgroup: WG286204 Cal ID: HPMS6 - 28-OCT-08

Analyte		Expected	Found	Units	RF	%D	UCL	Q
Chloroform	CCC	20.0	21.0	ug/L	0.430	5.20	30	
1,1-Dichloroethene	CCC	20.0	20.6	ug/L	0.422	2.90	30	
1,2-Dichloropropane	CCC	20.0	20.7	ug/L	0.229	3.30	30	
Ethylbenzene	CCC	20.0	21.4	ug/L	0.375	7.10	30	
Toluene	CCC	20.0	21.9	ug/L	1.00	9.60	30	
Vinyl Chloride	CCC	20.0	24.6	ug/L	0.235	23.1	30	
Bromoform	SPCC	20.0	19.0	ug/L	0.146	5.00	30	
Chlorobenzene	SPCC	20.0	20.6	ug/L	0.736	2.90	30	
Chloromethane	SPCC	20.0	17.5	ug/L	0.228	12.4	30	
1,1-Dichloroethane	SPCC	20.0	20.7	ug/L	0.491	3.40	30	
1,1,2,2-Tetrachloroethane	SPCC	20.0	20.4	ug/L	0.312	2.20	30	
Acetone		20.0	21.8	ug/L	0.0490	8.90	30	
Benzene		20.0	21.0	ug/L	0.725	5.00	30	
Bromobenzene		20.0	20.9	ug/L	0.519	4.40	30	
Bromochloromethane		20.0	20.5	ug/L	0.128	2.60	30	
Bromodichloromethane		20.0	20.4	ug/L	0.287	1.90	30	
Bromomethane		20.0	18.7	ug/L	0.146	6.70	30	
2-Butanone		20.0	21.0	ug/L	0.0694	5.00	30	
n-Butylbenzene		20.0	21.4	ug/L	1.79	7.10	30	
sec-Butylbenzene		20.0	22.0	ug/L	2.15	10.1	30	
tert-Butylbenzene		20.0	20.4	ug/L	0.389	1.80	30	
Carbon Disulfide		20.0	18.7	ug/L	0.581	6.40	30	
Carbon Tetrachloride		20.0	19.2	ug/L	0.336	4.20	30	
Dibromochloromethane		20.0	20.0	ug/L	0.245	0.200	30	
Chloroethane		20.0	21.7	ug/L	0.188	8.30	30	
2-Chloroethyl Vinyl Ether		20.0	21.2	ug/L	0.105	6.10	30	
2-Chlorotoluene		20.0	22.9	ug/L	1.69	14.7	30	
4-Chlorotoluene		20.0	21.1	ug/L	1.53	5.70	30	
1,2-Dibromo-3-Chloropropane		20.0	20.1	ug/L	0.0668	0.600	30	
1,2-Dibromoethane		20.0	20.8	ug/L	0.179	4.20	30	
Dibromomethane		20.0	20.4	ug/L	0.113	2.20	30	
1,2-Dichlorobenzene		20.0	21.0	ug/L	1.01	4.90	30	
1,3-Dichlorobenzene		20.0	21.2	ug/L	1.10	5.90	30	
1,4-Dichlorobenzene		20.0	20.0	ug/L	1.13	0.100	30	
Dichlorodifluoromethane		20.0	26.7	ug/L	0.312	33.6	30	*
1,2-Dichloroethane		20.0	19.6	ug/L	0.363	2.00	30	
cis-1,2-Dichloroethene		20.0	22.0	ug/L	0.229	10.2	30	
trans-1,2-Dichloroethene		20.0	20.9	ug/L	0.204	4.50	30	
1,3-Dichloropropane		20.0	21.0	ug/L	0.306	5.00	30	
2,2-Dichloropropane		20.0	18.5	ug/L	0.307	7.70	30	
cis-1,3-Dichloropropene		20.0	20.2	ug/L	0.285	1.00	30	
trans-1,3-Dichloropropene		20.0	18.7	ug/L	0.304	6.60	30	

ALT - Modified 09/06/2007
Version 1.5 PDF File ID: 1251123
Report generated 11/20/2008 10:12

Microbac®

Microbac Laboratories Inc.
ALTERNATE SOURCE CALIBRATION REPORT

00078287

Login Number: L08100867 Run Date: 10/28/2008 Sample ID: WG286204-12
Instrument ID: HPMS6 Run Time: 22:51 Method: 8260B
File ID: 6M79255 Analyst: CAA QC Key: STD
ICal Workgroup: WG286204 Cal ID: HPMS6 - 28-OCT-08

Analyte		Expected	Found	Units	RF	%D	UCL	Q
1,1-Dichloropropene		20.0	19.5	ug/L	0.268	2.40	30	
2-Hexanone		20.0	19.8	ug/L	0.118	0.800	30	
Hexachlorobutadiene		20.0	19.3	ug/L	0.270	3.50	30	
Isopropylbenzene		20.0	16.8	ug/L	1.11	16.1	30	
p-Isopropyltoluene		20.0	21.3	ug/L	1.92	6.50	30	
4-Methyl-2-Pentanone		20.0	19.4	ug/L	0.0599	2.90	30	
Methylene Chloride		20.0	20.0	ug/L	0.198	0	30	
Naphthalene		20.0	23.2	ug/L	1.27	15.8	30	
n-Propylbenzene		20.0	19.7	ug/L	2.47	1.60	30	
Styrene		20.0	18.8	ug/L	0.814	5.90	30	
1,1,1,2-Tetrachloroethane		20.0	20.7	ug/L	0.279	3.70	30	
Tetrachloroethene		20.0	20.0	ug/L	0.263	0.200	30	
1,2,3-Trichlorobenzene		20.0	21.0	ug/L	0.609	5.20	30	
1,2,4-Trichlorobenzene		20.0	21.0	ug/L	0.692	5.20	30	
1,1,1-Trichloroethane		20.0	19.9	ug/L	0.372	0.600	30	
1,1,2-Trichloroethane		20.0	20.3	ug/L	0.173	1.50	30	
Trichloroethene		20.0	20.7	ug/L	0.210	3.70	30	
Trichlorofluoromethane		20.0	20.2	ug/L	0.435	0.900	30	
1,2,3-Trichloropropane		20.0	19.9	ug/L	0.106	0.400	30	
1,2,4-Trimethylbenzene		20.0	21.9	ug/L	1.87	9.60	30	
1,3,5-Trimethylbenzene		20.0	19.5	ug/L	1.76	2.70	30	
Vinyl Acetate		20.0	18.2	ug/L	0.266	9.10	40	
o-Xylene		20.0	22.1	ug/L	0.472	10.4	30	
m-,p-Xylene		40.0	44.7	ug/L	0.487	11.7	30	

* Exceeds %D Limit

CCC Calibration Check Compounds
SPCC System Performance Check Compounds

ALT - Modified 09/06/2007
Version 1.5 PDF File ID: 1251123
Report generated 11/20/2008 10:12

Microbac®

Microbac Laboratories Inc.
CONTINUING CALIBRATION VERIFICATION (CCV)

00078288

Login Number: L08100867 Run Date: 11/05/2008 Sample ID: WG286973-02
Instrument ID: HPMS11 Run Time: 09:41 Method: 8260B
File ID: 11M54980 Analyst: WTD QC Key: STD
Workgroup (AAB#): WG286975 Cal ID: HPMS11 - 03-NOV-08
Matrix: WATER

Analyte		Expected	Found	UNITS	RF	%D	UCL	Q
Chloroform	CCC	50.0	52.0	ug/L	0.418	4.02	20	
1,1-Dichloroethene	CCC	50.0	54.9	ug/L	0.394	9.74	20	
1,2-Dichloropropane	CCC	50.0	51.9	ug/L	0.201	3.81	20	
Ethylbenzene	CCC	50.0	51.7	ug/L	0.439	3.34	20	
Toluene	CCC	50.0	49.8	ug/L	1.17	0.376	20	
Vinyl Chloride	CCC	50.0	42.4	ug/L	0.138	15.2	20	
Bromoform	SPCC	50.0	47.8	ug/L	0.139	4.39	40	
Chlorobenzene	SPCC	50.0	50.1	ug/L	0.787	0.196	40	
Chloromethane	SPCC	50.0	42.1	ug/L	0.109	15.7	40	
1,1-Dichloroethane	SPCC	50.0	51.7	ug/L	0.409	3.41	40	
1,1,2,2-Tetrachloroethane	SPCC	50.0	54.9	ug/L	0.388	9.77	40	
Acetone		50.0	51.5	ug/L	0.0395	2.96	40	
Benzene		50.0	50.1	ug/L	0.844	0.145	40	
Bromobenzene		50.0	50.9	ug/L	0.616	1.86	40	
Bromochloromethane		50.0	54.5	ug/L	0.135	9.08	40	
Bromodichloromethane		50.0	53.1	ug/L	0.298	6.13	40	
Bromomethane		50.0	64.3	ug/L	0.126	28.6	40	
2-Butanone		50.0	47.9	ug/L	0.0505	4.10	40	
n-Butylbenzene		50.0	54.5	ug/L	2.08	8.93	40	
sec-Butylbenzene		50.0	55.0	ug/L	2.69	9.95	40	
tert-Butylbenzene		50.0	52.9	ug/L	0.449	5.84	40	
Carbon Disulfide		50.0	54.9	ug/L	0.649	9.72	40	
Carbon Tetrachloride		50.0	55.5	ug/L	0.330	10.9	40	
Dibromochloromethane		50.0	48.7	ug/L	0.255	2.56	40	
Chloroethane		50.0	59.4	ug/L	0.134	18.9	40	
2-Chloroethyl Vinyl Ether		50.0	38.1	ug/L	0.0582	23.8	40	
2-Chlorotoluene		50.0	52.3	ug/L	2.02	4.53	40	
4-Chlorotoluene		50.0	49.3	ug/L	1.81	1.40	40	
1,2-Dibromo-3-Chloropropane		50.0	49.3	ug/L	0.0756	1.34	40	
1,2-Dibromoethane		50.0	50.0	ug/L	0.194	0.0336	40	
Dibromomethane		50.0	51.0	ug/L	0.107	1.95	40	
1,2-Dichlorobenzene		50.0	51.2	ug/L	1.11	2.47	40	
1,3-Dichlorobenzene		50.0	52.2	ug/L	1.23	4.44	40	
1,4-Dichlorobenzene		50.0	49.8	ug/L	1.24	0.408	40	
Dichlorodifluoromethane		50.0	56.4	ug/L	0.237	12.8	40	
1,2-Dichloroethane		50.0	49.8	ug/L	0.309	0.304	40	
cis-1,2-Dichloroethene		50.0	51.8	ug/L	0.239	3.68	40	
trans-1,2-Dichloroethene		50.0	52.5	ug/L	0.231	5.02	40	
1,3-Dichloropropane		50.0	48.4	ug/L	0.342	3.24	40	
2,2-Dichloropropane		50.0	53.4	ug/L	0.359	6.74	40	
cis-1,3-Dichloropropene		50.0	52.0	ug/L	0.322	4.03	40	
trans-1,3-Dichloropropene		50.0	40.4	ug/L	0.310	19.2	40	

CCV - Modified 03/05/2008
PDF File ID: 1251125
Report generated 11/20/2008 10:12

Microbac®

Microbac Laboratories Inc.
CONTINUING CALIBRATION VERIFICATION (CCV)

00078289

Login Number: L08100867 Run Date: 11/05/2008 Sample ID: WG286973-02
Instrument ID: HPMS11 Run Time: 09:41 Method: 8260B
File ID: 11M54980 Analyst: WTD QC Key: STD
Workgroup (AAB#): WG286975 Cal ID: HPMS11 - 03-NOV-08
Matrix: WATER

Analyte		Expected	Found	UNITS	RF	%D	UCL	Q
1,1-Dichloropropene		50.0	53.1	ug/L	0.320	6.15	40	
2-Hexanone		50.0	50.2	ug/L	0.102	0.376	40	
Hexachlorobutadiene		50.0	53.3	ug/L	0.329	6.61	40	
Isopropylbenzene		50.0	54.1	ug/L	1.42	8.20	40	
p-Isopropyltoluene		50.0	55.5	ug/L	2.38	11.0	40	
4-Methyl-2-Pentanone		50.0	53.5	ug/L	0.0536	7.00	40	
Methylene Chloride		50.0	55.1	ug/L	0.214	10.3	40	
Naphthalene		50.0	47.2	ug/L	1.45	5.53	40	
n-Propylbenzene		50.0	52.7	ug/L	2.97	5.35	40	
Styrene		50.0	54.9	ug/L	0.940	9.84	40	
1,1,1,2-Tetrachloroethane		50.0	50.7	ug/L	0.262	1.42	40	
Tetrachloroethene		50.0	52.0	ug/L	0.236	4.03	40	
1,2,3-Trichlorobenzene		50.0	48.5	ug/L	0.652	2.99	40	
1,2,4-Trichlorobenzene		50.0	48.9	ug/L	0.763	2.20	40	
1,1,1-Trichloroethane		50.0	53.1	ug/L	0.403	6.21	40	
1,1,2-Trichloroethane		50.0	50.8	ug/L	0.191	1.66	40	
Trichloroethene		50.0	48.9	ug/L	0.240	2.13	40	
Trichlorofluoromethane		50.0	58.0	ug/L	0.438	15.9	40	
1,2,3-Trichloropropane		50.0	50.3	ug/L	0.136	0.610	40	
1,2,4-Trimethylbenzene		50.0	52.8	ug/L	2.24	5.66	40	
1,3,5-Trimethylbenzene		50.0	53.8	ug/L	2.22	7.65	40	
Vinyl Acetate		50.0	92.3	ug/L	0.214	84.5	40	*
o-Xylene		50.0	53.0	ug/L	0.533	6.08	40	
m-,p-Xylene		100	103	ug/L	0.543	3.12	40	
1,2-Dichloroethene		100	104	ug/L	0.235	4.35	40	
Xylenes		150	156	ug/L	0.538	4.11	40	

* Exceeds %D Criteria

CCC Calibration Check Compounds
SPCC System Performance Check Compounds

CCV - Modified 03/05/2008
PDF File ID: 1251125
Report generated 11/20/2008 10:12

Microbac®

Microbac Laboratories Inc.
CONTINUING CALIBRATION VERIFICATION (CCV)

00078290

Login Number: L08100867 Run Date: 11/07/2008 Sample ID: WG287206-02
Instrument ID: HPMS6 Run Time: 12:00 Method: 8260B
File ID: 6M79548 Analyst: CAA QC Key: STD
Workgroup (AAB#): WG287207 Cal ID: HPMS6 - 28-OCT-08
Matrix: WATER

Analyte		Expected	Found	UNITS	RF	%D	UCL	Q
Chloroform	CCC	50.0	51.2	ug/L	0.419	2.43	20	
1,1-Dichloroethene	CCC	50.0	47.7	ug/L	0.391	4.70	20	
1,2-Dichloropropane	CCC	50.0	50.0	ug/L	0.222	0.0680	20	
Ethylbenzene	CCC	50.0	53.0	ug/L	0.371	5.95	20	
Toluene	CCC	50.0	50.5	ug/L	0.922	1.05	20	
Vinyl Chloride	CCC	50.0	44.3	ug/L	0.171	11.4	20	
Bromoform	SPCC	50.0	51.0	ug/L	0.157	2.06	40	
Chlorobenzene	SPCC	50.0	51.9	ug/L	0.743	3.81	40	
Chloromethane	SPCC	50.0	48.4	ug/L	0.252	3.24	40	
1,1-Dichloroethane	SPCC	50.0	48.6	ug/L	0.462	2.81	40	
1,1,2,2-Tetrachloroethane	SPCC	50.0	50.8	ug/L	0.310	1.65	40	
Acetone		50.0	43.9	ug/L	0.0395	12.2	40	
Benzene		50.0	50.6	ug/L	0.700	1.28	40	
Bromobenzene		50.0	52.9	ug/L	0.525	5.72	40	
Bromochloromethane		50.0	58.4	ug/L	0.146	16.7	40	
Bromodichloromethane		50.0	59.7	ug/L	0.336	19.4	40	
Bromomethane		50.0	46.3	ug/L	0.144	7.36	40	
2-Butanone		50.0	40.1	ug/L	0.0529	19.9	40	
n-Butylbenzene		50.0	54.5	ug/L	1.83	8.93	40	
sec-Butylbenzene		50.0	52.8	ug/L	2.06	5.69	40	
tert-Butylbenzene		50.0	49.8	ug/L	0.380	0.392	40	
Carbon Disulfide		50.0	55.7	ug/L	0.691	11.4	40	
Carbon Tetrachloride		50.0	41.4	ug/L	0.292	17.2	40	
Dibromochloromethane		50.0	51.3	ug/L	0.250	2.52	40	
Chloroethane		50.0	53.6	ug/L	0.186	7.28	40	
2-Chloroethyl Vinyl Ether		50.0	54.1	ug/L	0.107	8.29	40	
2-Chlorotoluene		50.0	51.5	ug/L	1.52	2.98	40	
4-Chlorotoluene		50.0	55.7	ug/L	1.61	11.4	40	
1,2-Dibromo-3-Chloropropane		50.0	47.0	ug/L	0.0624	6.06	40	
1,2-Dibromoethane		50.0	53.1	ug/L	0.182	6.15	40	
Dibromomethane		50.0	60.6	ug/L	0.134	21.2	40	
1,2-Dichlorobenzene		50.0	54.2	ug/L	1.04	8.34	40	
1,3-Dichlorobenzene		50.0	54.6	ug/L	1.13	9.26	40	
1,4-Dichlorobenzene		50.0	52.3	ug/L	1.18	4.51	40	
Dichlorodifluoromethane		50.0	42.8	ug/L	0.200	14.4	40	
1,2-Dichloroethane		50.0	49.2	ug/L	0.365	1.55	40	
cis-1,2-Dichloroethene		50.0	54.0	ug/L	0.224	8.04	40	
trans-1,2-Dichloroethene		50.0	49.1	ug/L	0.191	1.82	40	
1,3-Dichloropropane		50.0	49.0	ug/L	0.286	1.93	40	
2,2-Dichloropropane		50.0	44.7	ug/L	0.297	10.7	40	
cis-1,3-Dichloropropene		50.0	58.6	ug/L	0.330	17.2	40	
trans-1,3-Dichloropropene		50.0	49.9	ug/L	0.324	0.207	40	

CCV - Modified 03/05/2008
PDF File ID: 1251125
Report generated 11/20/2008 10:12

Microbac®

Microbac Laboratories Inc.
CONTINUING CALIBRATION VERIFICATION (CCV)

00078291

Login Number: L08100867 Run Date: 11/07/2008 Sample ID: WG287206-02
Instrument ID: HPMS6 Run Time: 12:00 Method: 8260B
File ID: 6M79548 Analyst: CAA QC Key: STD
Workgroup (AAB#): WG287207 Cal ID: HPMS6 - 28-OCT-08
Matrix: WATER

Analyte		Expected	Found	UNITS	RF	%D	UCL	Q
1,1-Dichloropropene		50.0	43.6	ug/L	0.239	12.9	40	
2-Hexanone		50.0	41.1	ug/L	0.0977	17.8	40	
Hexachlorobutadiene		50.0	49.1	ug/L	0.275	1.74	40	
Isopropylbenzene		50.0	48.4	ug/L	1.24	3.15	40	
p-Isopropyltoluene		50.0	54.9	ug/L	1.98	9.74	40	
4-Methyl-2-Pentanone		50.0	51.3	ug/L	0.0633	2.69	40	
Methylene Chloride		50.0	55.9	ug/L	0.219	11.7	40	
Naphthalene		50.0	42.9	ug/L	0.943	14.2	40	
n-Propylbenzene		50.0	49.9	ug/L	2.36	0.286	40	
Styrene		50.0	49.1	ug/L	0.839	1.72	40	
1,1,1,2-Tetrachloroethane		50.0	50.5	ug/L	0.272	0.941	40	
Tetrachloroethene		50.0	47.0	ug/L	0.250	6.04	40	
1,2,3-Trichlorobenzene		50.0	36.8	ug/L	0.426	26.4	40	
1,2,4-Trichlorobenzene		50.0	46.7	ug/L	0.615	6.60	40	
1,1,1-Trichloroethane		50.0	45.2	ug/L	0.338	9.70	40	
1,1,2-Trichloroethane		50.0	50.1	ug/L	0.170	0.144	40	
Trichloroethene		50.0	52.2	ug/L	0.211	4.32	40	
Trichlorofluoromethane		50.0	43.7	ug/L	0.382	12.6	40	
1,2,3-Trichloropropane		50.0	49.1	ug/L	0.104	1.87	40	
1,2,4-Trimethylbenzene		50.0	55.3	ug/L	1.89	10.5	40	
1,3,5-Trimethylbenzene		50.0	50.1	ug/L	1.75	0.164	40	
Vinyl Acetate		50.0	34.0	ug/L	0.199	32.1	40	
o-Xylene		50.0	55.1	ug/L	0.471	10.2	40	
m-,p-Xylene		100	111	ug/L	0.483	10.8	40	
1,2-Dichloroethene		100	103	ug/L	0.208	3.11	40	
Xylenes		150	166	ug/L	0.477	10.6	40	

* Exceeds %D Criteria

CCC Calibration Check Compounds
SPCC System Performance Check Compounds

CCV - Modified 03/05/2008
PDF File ID: 1251125
Report generated 11/20/2008 10:12

Microbac®

Microbac Laboratories Inc.
CONTINUING CALIBRATION VERIFICATION (CCV)

00078292

Login Number: L08100867 Run Date: 11/08/2008 Sample ID: WG287339-02
Instrument ID: HPMS14 Run Time: 18:20 Method: 8260B
File ID: 14M09703 Analyst: MDA QC Key: STD
Workgroup (AAB#): WG287340 Cal ID: HPMS14 - 11-OCT-08
Matrix: WATER

Analyte		Expected	Found	UNITS	RF	%D	UCL	Q
Chloroform	CCC	50.0	55.3	ug/L	0.404	10.5	20	
1,1-Dichloroethene	CCC	50.0	49.9	ug/L	0.317	0.116	20	
1,2-Dichloropropane	CCC	50.0	50.2	ug/L	0.196	0.388	20	
Ethylbenzene	CCC	50.0	53.3	ug/L	0.438	6.64	20	
Toluene	CCC	50.0	50.2	ug/L	1.16	0.326	20	
Vinyl Chloride	CCC	50.0	46.7	ug/L	0.118	6.64	20	
Bromoform	SPCC	50.0	53.6	ug/L	0.147	7.28	40	
Chlorobenzene	SPCC	50.0	52.5	ug/L	0.791	5.09	40	
Chloromethane	SPCC	50.0	46.4	ug/L	0.152	7.30	40	
1,1-Dichloroethane	SPCC	50.0	55.4	ug/L	0.387	10.9	40	
1,1,2,2-Tetrachloroethane	SPCC	50.0	47.6	ug/L	0.337	4.82	40	
Acetone		50.0	51.6	ug/L	0.0280	3.17	40	
Benzene		50.0	49.9	ug/L	0.769	0.200	40	
Bromobenzene		50.0	47.8	ug/L	0.652	4.31	40	
Bromochloromethane		50.0	52.8	ug/L	0.102	5.51	40	
Bromodichloromethane		50.0	54.8	ug/L	0.299	9.69	40	
Bromomethane		50.0	57.3	ug/L	0.131	14.7	40	
2-Butanone		50.0	42.4	ug/L	0.0332	15.1	40	
n-Butylbenzene		50.0	58.0	ug/L	1.75	16.0	40	
sec-Butylbenzene		50.0	54.4	ug/L	2.77	8.82	40	
tert-Butylbenzene		50.0	53.0	ug/L	0.467	5.96	40	
Carbon Disulfide		50.0	47.7	ug/L	0.556	4.55	40	
Carbon Tetrachloride		50.0	52.9	ug/L	0.373	5.86	40	
Dibromochloromethane		50.0	54.0	ug/L	0.269	7.93	40	
Chloroethane		50.0	47.4	ug/L	0.107	5.18	40	
2-Chloroethyl Vinyl Ether		50.0	125	ug/L	0.0464	150	40	*
2-Chlorotoluene		50.0	50.9	ug/L	2.22	1.74	40	
4-Chlorotoluene		50.0	55.4	ug/L	1.89	10.9	40	
1,2-Dibromo-3-Chloropropane		50.0	49.1	ug/L	0.0681	1.82	40	
1,2-Dibromoethane		50.0	50.5	ug/L	0.170	0.994	40	
Dibromomethane		50.0	47.9	ug/L	0.0845	4.30	40	
1,2-Dichlorobenzene		50.0	50.5	ug/L	1.08	1.01	40	
1,3-Dichlorobenzene		50.0	51.9	ug/L	1.28	3.84	40	
1,4-Dichlorobenzene		50.0	50.6	ug/L	1.26	1.15	40	
Dichlorodifluoromethane		50.0	45.0	ug/L	0.201	9.97	40	
1,2-Dichloroethane		50.0	54.1	ug/L	0.278	8.19	40	
cis-1,2-Dichloroethene		50.0	54.1	ug/L	0.209	8.23	40	
trans-1,2-Dichloroethene		50.0	56.5	ug/L	0.197	13.1	40	
1,3-Dichloropropane		50.0	49.6	ug/L	0.295	0.880	40	
2,2-Dichloropropane		50.0	57.0	ug/L	0.376	14.0	40	
cis-1,3-Dichloropropene		50.0	51.8	ug/L	0.292	3.53	40	
trans-1,3-Dichloropropene		50.0	53.1	ug/L	0.346	6.17	40	

CCV - Modified 03/05/2008
PDF File ID: 1251125
Report generated 11/20/2008 10:12

Microbac®

Microbac Laboratories Inc.
CONTINUING CALIBRATION VERIFICATION (CCV)

00078293

Login Number: L08100867 Run Date: 11/08/2008 Sample ID: WG287339-02
Instrument ID: HPMS14 Run Time: 18:20 Method: 8260B
File ID: 14M09703 Analyst: MDA QC Key: STD
Workgroup (AAB#): WG287340 Cal ID: HPMS14 - 11-OCT-08
Matrix: WATER

Analyte		Expected	Found	UNITS	RF	%D	UCL	Q
1,1-Dichloropropene		50.0	53.6	ug/L	0.302	7.28	40	
2-Hexanone		50.0	44.3	ug/L	0.0714	11.5	40	
Hexachlorobutadiene		50.0	57.8	ug/L	0.420	15.7	40	
Isopropylbenzene		50.0	54.2	ug/L	1.41	8.38	40	
p-Isopropyltoluene		50.0	56.3	ug/L	2.22	12.7	40	
4-Methyl-2-Pentanone		50.0	46.0	ug/L	0.0365	8.10	40	
Methylene Chloride		50.0	47.9	ug/L	0.159	4.17	40	
Naphthalene		50.0	60.3	ug/L	0.689	20.6	40	
n-Propylbenzene		50.0	54.2	ug/L	3.21	8.42	40	
Styrene		50.0	54.1	ug/L	0.828	8.13	40	
1,1,1,2-Tetrachloroethane		50.0	55.0	ug/L	0.307	9.93	40	
Tetrachloroethene		50.0	54.3	ug/L	0.337	8.64	40	
1,2,3-Trichlorobenzene		50.0	56.2	ug/L	0.448	12.4	40	
1,2,4-Trichlorobenzene		50.0	58.0	ug/L	0.555	16.0	40	
1,1,1-Trichloroethane		50.0	57.3	ug/L	0.418	14.6	40	
1,1,2-Trichloroethane		50.0	50.4	ug/L	0.166	0.890	40	
Trichloroethene		50.0	51.9	ug/L	0.235	3.74	40	
Trichlorofluoromethane		50.0	47.3	ug/L	0.404	5.40	40	
1,2,3-Trichloropropane		50.0	47.9	ug/L	0.122	4.13	40	
1,2,4-Trimethylbenzene		50.0	56.1	ug/L	1.86	12.2	40	
1,3,5-Trimethylbenzene		50.0	57.1	ug/L	2.00	14.2	40	
Vinyl Acetate		50.0	57.2	ug/L	0.181	14.4	40	
o-Xylene		50.0	54.6	ug/L	0.510	9.19	40	
m-,p-Xylene		100	110	ug/L	0.528	10.4	40	
1,2-Dichloroethene		100	111	ug/L	0.203	10.7	40	
Xylenes		150	165	ug/L	0.519	9.99	40	

* Exceeds %D Criteria

CCC Calibration Check Compounds
SPCC System Performance Check Compounds

CCV - Modified 03/05/2008
PDF File ID: 1251125
Report generated 11/20/2008 10:12

Microbac®

Microbac Laboratories Inc.
CONTINUING CALIBRATION VERIFICATION (CCV)

00078294

Login Number: L08100867 Run Date: 11/11/2008 Sample ID: WG287498-02
Instrument ID: HPMS14 Run Time: 09:23 Method: 8260B
File ID: 14M09754 Analyst: WTD QC Key: STD
Workgroup (AAB#): WG287499 Cal ID: HPMS14 - 11-OCT-08
Matrix: WATER

Analyte		Expected	Found	UNITS	RF	%D	UCL	Q
Chloroform	CCC	50.0	57.3	ug/L	0.418	14.6	20	
1,1-Dichloroethene	CCC	50.0	52.5	ug/L	0.333	4.92	20	
1,2-Dichloropropane	CCC	50.0	52.5	ug/L	0.205	4.91	20	
Ethylbenzene	CCC	50.0	54.4	ug/L	0.447	8.83	20	
Toluene	CCC	50.0	49.9	ug/L	1.15	0.107	20	
Vinyl Chloride	CCC	50.0	54.8	ug/L	0.139	9.66	20	
Bromoform	SPCC	50.0	53.7	ug/L	0.147	7.39	40	
Chlorobenzene	SPCC	50.0	52.2	ug/L	0.785	4.32	40	
Chloromethane	SPCC	50.0	51.7	ug/L	0.170	3.42	40	
1,1-Dichloroethane	SPCC	50.0	58.9	ug/L	0.411	17.7	40	
1,1,2,2-Tetrachloroethane	SPCC	50.0	49.0	ug/L	0.347	2.00	40	
Acetone		50.0	45.7	ug/L	0.0249	8.52	40	
Benzene		50.0	51.3	ug/L	0.791	2.69	40	
Bromobenzene		50.0	48.0	ug/L	0.653	4.09	40	
Bromochloromethane		50.0	50.5	ug/L	0.0972	0.928	40	
Bromodichloromethane		50.0	58.3	ug/L	0.318	16.6	40	
Bromomethane		50.0	60.4	ug/L	0.138	20.9	40	
2-Butanone		50.0	43.3	ug/L	0.0338	13.5	40	
n-Butylbenzene		50.0	59.1	ug/L	1.78	18.1	40	
sec-Butylbenzene		50.0	54.8	ug/L	2.79	9.59	40	
tert-Butylbenzene		50.0	52.9	ug/L	0.467	5.85	40	
Carbon Disulfide		50.0	31.1	ug/L	0.363	37.7	40	
Carbon Tetrachloride		50.0	57.6	ug/L	0.405	15.2	40	
Dibromochloromethane		50.0	55.2	ug/L	0.275	10.4	40	
Chloroethane		50.0	50.0	ug/L	0.112	0.0920	40	
2-Chloroethyl Vinyl Ether		50.0	75.5	ug/L	0.0265	51.1	40	*
2-Chlorotoluene		50.0	54.8	ug/L	2.39	9.57	40	
4-Chlorotoluene		50.0	54.1	ug/L	1.85	8.24	40	
1,2-Dibromo-3-Chloropropane		50.0	51.3	ug/L	0.0712	2.69	40	
1,2-Dibromoethane		50.0	51.4	ug/L	0.173	2.74	40	
Dibromomethane		50.0	49.5	ug/L	0.0874	1.06	40	
1,2-Dichlorobenzene		50.0	50.4	ug/L	1.08	0.824	40	
1,3-Dichlorobenzene		50.0	51.9	ug/L	1.28	3.76	40	
1,4-Dichlorobenzene		50.0	50.9	ug/L	1.26	1.73	40	
Dichlorodifluoromethane		50.0	51.9	ug/L	0.232	3.81	40	
1,2-Dichloroethane		50.0	58.8	ug/L	0.302	17.6	40	
cis-1,2-Dichloroethene		50.0	53.5	ug/L	0.207	6.97	40	
trans-1,2-Dichloroethene		50.0	55.2	ug/L	0.192	10.3	40	
1,3-Dichloropropane		50.0	51.5	ug/L	0.307	2.91	40	
2,2-Dichloropropane		50.0	56.9	ug/L	0.375	13.8	40	
cis-1,3-Dichloropropene		50.0	54.1	ug/L	0.305	8.17	40	
trans-1,3-Dichloropropene		50.0	56.2	ug/L	0.366	12.4	40	

CCV - Modified 03/05/2008
PDF File ID: 1251125
Report generated 11/20/2008 10:12

Microbac®

Microbac Laboratories Inc.
CONTINUING CALIBRATION VERIFICATION (CCV)

00078295

Login Number: L08100867 Run Date: 11/11/2008 Sample ID: WG287498-02
Instrument ID: HPMS14 Run Time: 09:23 Method: 8260B
File ID: 14M09754 Analyst: WTD QC Key: STD
Workgroup (AAB#): WG287499 Cal ID: HPMS14 - 11-OCT-08
Matrix: WATER

Analyte		Expected	Found	UNITS	RF	%D	UCL	Q
1,1-Dichloropropene		50.0	55.4	ug/L	0.312	10.9	40	
2-Hexanone		50.0	47.9	ug/L	0.0772	4.26	40	
Hexachlorobutadiene		50.0	54.5	ug/L	0.396	8.92	40	
Isopropylbenzene		50.0	54.5	ug/L	1.42	8.98	40	
p-Isopropyltoluene		50.0	56.3	ug/L	2.22	12.6	40	
4-Methyl-2-Pentanone		50.0	44.6	ug/L	0.0354	10.9	40	
Methylene Chloride		50.0	45.8	ug/L	0.152	8.49	40	
Naphthalene		50.0	59.7	ug/L	0.682	19.3	40	
n-Propylbenzene		50.0	55.2	ug/L	3.27	10.4	40	
Styrene		50.0	53.3	ug/L	0.816	6.56	40	
1,1,1,2-Tetrachloroethane		50.0	57.1	ug/L	0.319	14.1	40	
Tetrachloroethene		50.0	52.9	ug/L	0.328	5.72	40	
1,2,3-Trichlorobenzene		50.0	55.0	ug/L	0.439	10.0	40	
1,2,4-Trichlorobenzene		50.0	56.6	ug/L	0.542	13.2	40	
1,1,1-Trichloroethane		50.0	60.4	ug/L	0.441	20.9	40	
1,1,2-Trichloroethane		50.0	50.9	ug/L	0.168	1.87	40	
Trichloroethene		50.0	51.5	ug/L	0.233	2.99	40	
Trichlorofluoromethane		50.0	54.7	ug/L	0.465	9.34	40	
1,2,3-Trichloropropane		50.0	49.0	ug/L	0.125	1.92	40	
1,2,4-Trimethylbenzene		50.0	57.0	ug/L	1.89	14.1	40	
1,3,5-Trimethylbenzene		50.0	57.7	ug/L	2.02	15.3	40	
Vinyl Acetate		50.0	52.3	ug/L	0.167	4.69	40	
o-Xylene		50.0	54.2	ug/L	0.506	8.41	40	
m-,p-Xylene		100	111	ug/L	0.530	10.8	40	
1,2-Dichloroethene		100	109	ug/L	0.199	8.64	40	
Xylenes		150	165	ug/L	0.518	10.0	40	

* Exceeds %D Criteria

CCC Calibration Check Compounds
SPCC System Performance Check Compounds

CCV - Modified 03/05/2008
PDF File ID: 1251125
Report generated 11/20/2008 10:12

Microbac®

Microbac Laboratories Inc.

INTERNAL STANDARD AREA SUMMARY
(COMPARED TO CCV)

00078296

Login Number: L08100867
Instrument ID: HPMS11
Workgroup (AAB#): WG286975

CCV Number: WG286973-02
CAL ID: HPMS11-03-NOV-08
Matrix: WATER

Sample Number	Dilution	Tag	IS-1	IS-2	IS-3
WG286973-02	NA	NA	387942	678397	863708
Upper Limit	NA	NA	775884	1356794	1727416
Lower Limit	NA	NA	193971	339199	431854
L08100867-08	1.00	01	372705	690998	899216
L08100867-09	1.00	01	369193	690077	886777
WG286975-01	1.00	01	361268	671201	878664
WG286975-02	1.00	01	368951	648052	825558
WG286975-03	1.00	01	375423	655695	843761

IS-1 - 1,4-Dichlorobenzene-d4
IS-2 - Chlorobenzene-d5
IS-3 - Fluorobenzene

Underline = Response outside limits

INTERNAL_STD - Modified 03/06/2008
PDF File ID: 1251126
Report generated 11/20/2008 10:12

Microbac®

Microbac Laboratories Inc.

INTERNAL STANDARD AREA SUMMARY
(COMPARED TO CCV)

00078297

Login Number: L08100867
Instrument ID: HPMS6
Workgroup (AAB#): WG287207

CCV Number: WG287206-02
CAL ID: HPMS6-28-OCT-08
Matrix: WATER

Sample Number	Dilution	Tag	IS-1	IS-2	IS-3
WG287206-02	NA	NA	811986	1204204	1104173
Upper Limit	NA	NA	1623972	2408408	2208346
Lower Limit	NA	NA	405993	602102	552087
L08100867-01	1.00	01	485379	700419	624757
L08100867-02	1.00	01	595151	766120	740689
L08100867-03	1.00	01	620530	829544	806965
L08100867-04	1.00	01	495588	704402	660276
L08100867-05	1.00	01	621719	948245	918168
L08100867-06	1.00	01	606255	908497	887598
WG287207-01	1.00	01	675887	1023188	988673
WG287207-02	1.00	01	722641	1034469	1051911
WG287207-03	1.00	01	593799	883288	869985
WG287207-04	1.00	01	638641	903450	906423
WG287207-05	1.00	01	646443	932098	961063
WG287207-06	1.00	01	485379	700419	624757
WG287207-07	1.00	01	595151	766120	740689
WG287207-08	1.00	01	620530	829544	806965

IS-1 - 1,4-Dichlorobenzene-d4
IS-2 - Chlorobenzene-d5
IS-3 - Fluorobenzene

Underline = Response outside limits

INTERNAL_STD - Modified 03/06/2008
PDF File ID: 1251126
Report generated 11/20/2008 10:12

Microbac®

Microbac Laboratories Inc.

INTERNAL STANDARD AREA SUMMARY
(COMPARED TO CCV)

00078298

Login Number: L08100867
Instrument ID: HPMS14
Workgroup (AAB#): WG287340

CCV Number: WG287339-02
CAL ID: HPMS14-11-OCT-08
Matrix: WATER

Sample Number	Dilution	Tag	IS-1	IS-2	IS-3
WG287339-02	NA	NA	229937	470946	611319
Upper Limit	NA	NA	459874	941892	1222638
Lower Limit	NA	NA	114969	235473	305660
L08100867-11	50000	DL01	128122	282904	385294
WG287340-01	1.00	01	174386	393894	536805
WG287340-02	1.00	01	200304	417225	567581
WG287340-03	1.00	01	206886	429388	588329

IS-1 - 1,4-Dichlorobenzene-d4
IS-2 - Chlorobenzene-d5
IS-3 - Fluorobenzene

Underline = Response outside limits

INTERNAL_STD - Modified 03/06/2008
PDF File ID: 1251126
Report generated 11/20/2008 10:12

Microbac®

Microbac Laboratories Inc.

INTERNAL STANDARD AREA SUMMARY
(COMPARED TO CCV)

00078299

Login Number: L08100867
Instrument ID: HPMS14
Workgroup (AAB#): WG287499

CCV Number: WG287498-02
CAL ID: HPMS14-11-OCT-08
Matrix: WATER

Sample Number	Dilution	Tag	IS-1	IS-2	IS-3
WG287498-02	NA	NA	192762	401667	529077
Upper Limit	NA	NA	385524	803334	1058154
Lower Limit	NA	NA	96381	200834	264539
L08100867-11	100000	DL02	106161	236201	320240
WG287499-01	1.00	01	145936	330614	453658
WG287499-02	1.00	01	180743	366338	475143
WG287499-03	1.00	01	193466	389747	520810
WG287499-04	1.00	01	171477	383859	516978
WG287499-05	1.00	01	167646	373383	499556

IS-1 - 1,4-Dichlorobenzene-d4
IS-2 - Chlorobenzene-d5
IS-3 - Fluorobenzene

Underline = Response outside limits

INTERNAL_STD - Modified 03/06/2008
PDF File ID: 1251126
Report generated 11/20/2008 10:12

Microbac®

Microbac Laboratories Inc.

INTERNAL STANDARD RETENTION TIME SUMMARY
(COMPARED TO CCV)

00078300

Login Number: L08100867
Instrument ID: HPMS11
Workgroup (AAB#): WG286975

CCV Number: WG286973-02
CAL ID: HPMS11-03-NOV-08
Matrix: WATER

Sample Number	Dilution	Tag	IS-1	IS-2	IS-3
WG286973-02	NA	NA	16.52	13.72	10.11
Upper Limit	NA	NA	17.02	14.22	10.61
Lower Limit	NA	NA	16.02	13.22	9.61
L08100867-08	1.00	01	16.523	13.721	10.112
L08100867-09	1.00	01	16.523	13.721	10.102
WG286975-01	1.00	01	16.523	13.72	10.112
WG286975-02	1.00	01	16.523	13.721	10.102
WG286975-03	1.00	01	16.523	13.721	10.102

IS-1 - 1,4-Dichlorobenzene-d4
IS-2 - Chlorobenzene-d5
IS-3 - Fluorobenzene

Underline = Response outside limits

INTERNAL_STD_RT - Modified 03/06/2008
PDF File ID: 1251127
Report generated 11/20/2008 10:12

Microbac®

Microbac Laboratories Inc.

INTERNAL STANDARD RETENTION TIME SUMMARY
(COMPARED TO CCV)

00078301

Login Number: L08100867
Instrument ID: HPMS6
Workgroup (AAB#): WG287207

CCV Number: WG287206-02
CAL ID: HPMS6-28-OCT-08
Matrix: WATER

Sample Number	Dilution	Tag	IS-1	IS-2	IS-3
WG287206-02	NA	NA	18.86	15.31	10.83
Upper Limit	NA	NA	19.36	15.81	11.33
Lower Limit	NA	NA	18.36	14.81	10.33
L08100867-01	1.00	01	18.85	15.3	10.82
L08100867-02	1.00	01	18.86	15.31	10.83
L08100867-03	1.00	01	18.86	15.3	10.83
L08100867-04	1.00	01	18.85	15.3	10.82
L08100867-05	1.00	01	18.86	15.29	10.82
L08100867-06	1.00	01	18.85	15.3	10.82
WG287207-01	1.00	01	18.86	15.3	10.83
WG287207-02	1.00	01	18.85	15.3	10.82
WG287207-03	1.00	01	18.85	15.3	10.82
WG287207-04	1.00	01	18.86	15.29	10.82
WG287207-05	1.00	01	18.85	15.3	10.82
WG287207-06	1.00	01	18.85	15.3	10.82
WG287207-07	1.00	01	18.86	15.31	10.83
WG287207-08	1.00	01	18.86	15.3	10.83

IS-1 - 1,4-Dichlorobenzene-d4
IS-2 - Chlorobenzene-d5
IS-3 - Fluorobenzene

Underline = Response outside limits

INTERNAL_STD_RT - Modified 03/06/2008
PDF File ID: 1251127
Report generated 11/20/2008 10:12

Microbac®

Microbac Laboratories Inc.

INTERNAL STANDARD RETENTION TIME SUMMARY
(COMPARED TO CCV)

00078302

Login Number: L08100867
Instrument ID: HPMS14
Workgroup (AAB#): WG287340

CCV Number: WG287339-02
CAL ID: HPMS14-11-OCT-08
Matrix: WATER

Sample Number	Dilution	Tag	IS-1	IS-2	IS-3
WG287339-02	NA	NA	17.15	14.35	10.74
Upper Limit	NA	NA	17.65	14.85	11.24
Lower Limit	NA	NA	16.65	13.85	10.24
L08100867-11	50000	DL01	17.149	14.35	10.743
WG287340-01	1.00	01	17.149	14.35	10.743
WG287340-02	1.00	01	17.149	14.35	10.743
WG287340-03	1.00	01	17.149	14.35	10.743

IS-1 - 1,4-Dichlorobenzene-d4
IS-2 - Chlorobenzene-d5
IS-3 - Fluorobenzene

Underline = Response outside limits

INTERNAL_STD_RT - Modified 03/06/2008
PDF File ID: 1251127
Report generated 11/20/2008 10:12

Microbac®

Microbac Laboratories Inc.

INTERNAL STANDARD RETENTION TIME SUMMARY
(COMPARED TO CCV)

00078303

Login Number: L08100867
Instrument ID: HPMS14
Workgroup (AAB#): WG287499

CCV Number: WG287498-02
CAL ID: HPMS14-11-OCT-08
Matrix: WATER

Sample Number	Dilution	Tag	IS-1	IS-2	IS-3
WG287498-02	NA	NA	17.14	14.35	10.73
Upper Limit	NA	NA	17.64	14.85	11.23
Lower Limit	NA	NA	16.64	13.85	10.23
L08100867-11	100000	DL02	17.149	14.35	10.733
WG287499-01	1.00	01	17.149	14.35	10.743
WG287499-02	1.00	01	17.138	14.35	10.733
WG287499-03	1.00	01	17.138	14.35	10.743
WG287499-04	1.00	01	17.138	14.35	10.733
WG287499-05	1.00	01	17.149	14.35	10.733

IS-1 - 1,4-Dichlorobenzene-d4
IS-2 - Chlorobenzene-d5
IS-3 - Fluorobenzene

Underline = Response outside limits

INTERNAL_STD_RT - Modified 03/06/2008
PDF File ID: 1251127
Report generated 11/20/2008 10:12

Microbac®

LONGHORN ARMY AMMUNITION PLANT,

Karnack, Texas

MONTHLY MANAGERS' MEETING

AGENDA

DATE:	Tuesday, 10 November 2009
TIME:	1:00 p.m.
PLACE:	Teleconference
	Call-In Number 866-797-9304, Passcode 4155734

Welcome **RMZ**

Action Items:

Army

- Provide 2009 IAP public website and hardcopies to the library.

EPA Groundwater Sampling **ST**

- LHAAP-18/24
- MMRP Sites

Defense Environmental Restoration Program (DERP) PBC Update **PS/GJ**

- Document Status/Environmental Sites (Table)
- Groundwater Treatment Plant

DERP Total Environmental Restoration Contract Update

- LHAAP-37/67 – Draft Final ROD Status **RMZ**

BRAC-Funded Environmental Restoration

- LHAAP-19 – Demolition Landfill Progress **JRL/AW**

MMRP **JRL/AW**

Update

Other Issues **RMZ**

- 2009 IAP Download at: https://aero.apgea.army.mil/pIAP/frmInstallations.jsp
- LHAAP-18/24 ESD

Adjourn

Shaw® Shaw Environmental, Inc.

Subject: **Draft Final Minutes, Monthly Managers Meeting**

Location of Meeting: **Teleconference**

Date of Meeting: **November 10, 2009; 1:00 PM – 01:45 PM**

Meeting Participants:

USAEC:	Matthew Mechenes
USACE-Tulsa:	Aaron Williams, John Lambert
Shaw:	Praveen Srivastav, Kay Everett, Greg Jones, Susan Watson
USEPA Region 6:	Steve Tzhone, Terry Burton
Booz Allen Hamilton:	Rich Mayer
USGS:	Kent Becher
TCEQ:	Fay Duke, Dale Vodak
USFWS:	Paul Bruckwicki

Previous Action Items

Army

- Provide 2009 IAP public website and hardcopies to the library. *Completed. John Lambert indicated that the address to the public website is found at the bottom of the agenda and an electronic copy was sent to stakeholders prior to the meeting. John said that hardcopies will be sent to the Marshall Public Library.*

EPA Groundwater Sampling ***Steve Tzhone***

Steve Tzhone asked that the EPA's sampling crew provide a synopsis of their sampling effort before the discussion of the sampling event at LHAAP-18/24.

MMRP Sites

Rich Mayer discussed the issues encountered when sampling groundwater at the MMRP sites. They completed the task on Saturday (November 7, 2009). He indicated that many wells were purged almost dry and that low flow sampling was not possible. Some had very slow recharge. The analytical results are expected from the lab (Test America) at any time. Once received, Rich indicated that the sampling report would follow in approximately 2 weeks. It was agreed that the results would be shared among all stakeholders. John Lambert indicated that the results received

should resolve any comments EPA and TCEQ had on the MEC report. He asked if the EPA would be retracting and reissuing their comments at that time. Steve said that the results should be incorporated into the responses to comments by referencing the sampling report and then incorporated into the MEC report. Based on the proposed revisions, EPA can come back with additional comments or no further action.

LHAAP-18/24

The USGS and TVA crew sampled at LHAAP-18/24. Most of the wells encountered at LHAAP-18/24 were not favorable for low flow sampling. The crew had to bail most wells, and the recharge rate was slow. Kent Becher requested permission to enter the site on Friday to complete some of the activities, since hunting season has opened and there are some adjacent areas that are designated for hunting. John Lambert said he would present the request to BRAC.

Defense Environmental Restoration Program (DERP) PBC Update **Praveen Srivastav**

Document Status/Environmental Sites (Table)

Praveen Srivastav reviewed the document status table. The Draft Decision Document (DD) for LHAAP-02 is in comment resolution after Army's review. A soil removal work plan is being prepared for LHAAP-03. The Draft Completion Report for LHAAP-04 soil removal is in preparation. County notification documents are currently being prepared for LHAAP-06, -07, -51, -55, -64, -66, and -68. A Draft of the LHAAP-06 affidavit packet has been submitted to Army for review. The Responses to Comments (RTCs) on the Draft Feasibility Study (FS) Addendum for LHAAP-16 are in regulatory review. The RTCs for the Draft Final FS for LHAAP-17 are in regulatory review. Resolution of Army comments for the Draft FS for LHAAP-18/24 is in progress. RTCs for the Draft Final FS for LHAAP-29 are in preparation for submittal to regulators. The Final Focused FS for LHAAP-46 was submitted on 10/30/09. Army comments to the Draft Proposed Plan (PP) are being resolved. Responses to comments on the Draft FS for LHAAP-47 were returned to the Army for review after adding a new round of groundwater sampling results. Responses to Army comments for the Draft Final PP for LHAAP-49 are being prepared. The Draft Record of Decision (ROD) for LHAAP-49 is in Army review. The RTCs for the Draft Final FS for LHAAP-50 is in regulatory review. RTCs for the Draft proposed plan for LHAAP-50 are being prepared. Revised RTCs to the Draft Final FS for LHAAP-58 are in regulatory review. The Draft PP for LHAAP-58 is in Army review. The county notification documentation for LHAAP-60 is in preparation. Comments to the Draft Final DD for LHAAP-35/36 have been resolved; the document is currently being prepared for review by Army before submittal to the regulators. For the Pistol Range, the Draft Final Completion Report is in regulatory review, and responses to comments on the Draft PP are in progress.

Groundwater Treatment Plant Update

The Groundwater Treatment Plant (GWTP) is currently operating normally. The treatment system for metals and organics is running at approximately 200 gallons per minute, and the fluidized bed reactor (for perchlorate removal) is operating at about 18 to 20 gallons per minute. Last week, the plant underwent an inspection by the TCEQ regarding hazardous waste management. No violations were reported.

DERP Total Environmental Restoration Contract (TERC) Update **John Lambert**

LHAAP-37/67—Draft Final ROD Status
RODs for LHAAP-37/67 are close to being sent to the regulators. Some revisions are being made.

Steve noted that the next quarterly meeting of HQ EPA and HQ Army is December 1st, and LHAAP is on the agenda – specifically the 37/67 ROD language.

A brief discussion ensued on what sites, if any, may be ready for public notice during December's RAB meeting. The LHAAP-49 Proposed Plan was considered, but was determined to be unlikely given the time frame needed to resolve the TCEQ comments and then publish a notice in the papers.

BRAC-Funded Environmental Restoration **John Lambert/Aaron Williams**

LHAAP-19-Demolition Landfill Progress
Adverse weather conditions have impeded progress, but the Army expects top soil placement to be completed shortly. They are planning to start seeding the cap next Monday. The Texas Parks and Wildlife will be involved. Their goal includes using native grasses and other vegetation. The boring and monitoring well samples generally looked good, although there was one metals result that will need to be discussed further when Fay Duke returns.

MMRP **John Lambert**

Update
The Army is awaiting confirmation sampling results regarding the MC data summary. The path forward will be decided when those results are available. The MEC Remedial Action Report is Final, and the metes and bounds survey is being prepared.

Other Issues **John Lambert**

2009 IAP Download at: https://aero.apgea.army.mil/pIAP/frmInstallations.jsp
Hardcopies will be provided to the Marshall Public Library, the Longhorn AAP Administrative Record repository.

LHAAP-18/24 ESD
EPA comments were received and are being resolved in coordination with BRAC Legal. Steve Tzhone asked the Army to let him know if any clarification or assistance was needed.

The RAB meeting for December has been scheduled for 6:30 PM on December 1, 2009. The December monthly manager's meeting has been scheduled for 2:00 PM on December 1.

Meeting Adjourned

Shaw

LONGHORN ARMY AMMUNITION PLANT
MONTHLY MANAGERS' MEETING

Location	teleconference		
Date	10-Nov-2009	**Time**	1:00 PM

ATTENDEES

Name (printed)	Signature	Organization	Phone	E-mail
Longhorn Team Members				
Rose M. Zeiler		BRAC	(479) 635-0110	rose.zeiler@us.army.mil
Matthew Mechenes	✓	USAEC	(410) 436-1505	matthew.mechenes@us.army.mil
Aaron Williams	✓	USACE, Tulsa	(918) 669-4915	aaron.k.williams@usace.army.mil
John Lambert	✓	USACE, Tulsa	(918) 669-4992	john.r.lambert@SWT03.usace.army.mil
Scottie Fiehler		USACE, Tulsa	(918) 669-7232	scottie.fiehler@us.army.mil
Stephen Tzhone	✓	USEPA, Dallas	(214) 665-8409	tzhone.stephen@epa.gov
Raji Josiam		USEPA, Dallas	(214) 665-8529	josiam.raji@epa.gov
Fay Duke		TCEQ, Austin	(512) 239-2443	fduke@tceq.state.tx.us
Dale Vodak		TCEQ, Tyler	(903) 535-5142	dvodak@tceq.state.tx.us
Barry Forsythe		USFSW, Dallas	(214) 665-8467	forsythe.barry@epa.gov
Paul Bruckwicki	✓	USFSW, Karnack	(903) 679-4536	paul_bruckwicki@fws.gov
Mark Williams		USFSW, Karnack	(903) 679-9144	mark_williams@fws.gov
Praveen Srivastav		SHAW, Houston	(713) 996-4588	praveen.srivastav@shawgrp.com
Kay Everett		SHAW, Houston	(713) 996-4421	kay.everett@shawgrp.com
Greg Jones		SHAW, Houston	(713) 996-4472	greg.n.jones@shawgrp.com
Van Vangala		SHAW, Houston	(713) 996-4459	van.vangala@shawgrp.com
Susan Watson		SHAW, Houston	(713) 996-4407	susan.watson@shawgrp.com
Kent Becher	✓	USGS		
Terry Burton	✓	EPA		
Rich Mayer	✓	BAH		

Shaw Environmental, Inc.

Status of Sites and Technical Documents
Longhorn Army Ammunition Plant – PBC Contract
November 10, 2009

No.	Document in Progress	Submittal Date	Army	Regulator	Next Submittal	Expected Date	Army	Regulator	Comment Resolution	Status	Remarks
1	Draft Rev 01Decision Document, LHAAP-02	10/01/09	x		Draft Final	11/30/09	x	x		In comment resolution after Army's review	DD calls for limited groundwater monitoring
2	Draft Soil Removal Work Plan, LHAAP-03	11/30/09	x							In preparation	
3	Draft Completion Report, LHAAP-04	11/15/09	x							In preparation	
4	County Notification LHAAP-06, 07, 51, 55, 64, 66, 68	11/30/09	x							Draft for LHAAP-06 submitted for Army review. Others in preparation.	One survey remaining.
5	Draft Final Feasibility Study Addendum, Rev 01, LHAAP-16	7/3/08		x	Final	12/15/09	x	x	In progress	RTCs in regulatory review	
6	Draft Final Feasibility Study, LHAAP-17	4/14/09	x	x	Final	12/15/09	x	x	In progress	RTCs in regulatory review	
7	Draft Feasibility Study, LHAAP-18/24	3/3/09	x		Draft Final	01/31/09	x	x	In progress	Army comments received. Resolution in progress. Revised RTCs in Army's review as of 7/26/09	
8	Draft Final Feasibility Study, LHAAP-29	03/11/09	x	x	RTC	11/16/09	x	x	In progress	Revised RTCs reviewed by Army. Preparing RTCs for submittal to regulators	

Shaw Environmental, Inc.

Status of Sites and Technical Documents
Longhorn Army Ammunition Plant – PBC Contract
November 10, 2009

No.	Document in Progress	Submittal Date	Army	Regulator	Next Submittal	Expected Date	Army	Regulator	Comment Resolution	Status	Remarks
9	Final Focused Feasibility Study, LHAAP-46	10/30/09	x	x					Resolution complete	Final FS submitted	
10	Draft Proposed Plan, LHAAP-46	9/29/09	x		Draft Final	11/30/09	x	x	In progress	Army comments received.	
11	Draft Focused Feasibility Study, LHAAP-47	12/23/08	x						In progress	Army comments received. Conducted a new round of groundwater sampling. Submitted revised RTCs on 9/24/09	
12	Draft Final Proposed Plan, LHAAP-49	9/14/09	x	x	Final	11/30/09				Regulatory review complete. RTCs in preparation	
13	Draft ROD, LHAAP-49	10/20/09	x		Draft Final	11/30/09	x	x		In Army review	
14	Draft Final Feasibility Study, LHAAP-50	11/20/08	x	x	Final	11/30/09	x	x	In progress	RTCs in regulatory review	
15	Draft Proposed Plan, LHAAP-50	10/16/09	x		Draft Final	11/30/09	x	x		Army's review complete. RTCs in preparation	
16	Draft Final Feasibility Study, LHAAP-58	9/20/07	x	x	Final	11/30/09	x	x	In progress	RTCs in regulatory review	
17	Draft Proposed Plan, LHAAP-58	10/08/09	x		Draft Final	11/20/09	x	x	In progress	RTCs in Army's review	
18	County Notification, LHAAP-60	Nov 2009							In preparation		

Shaw Environmental, Inc.

Status of Sites and Technical Documents
Longhorn Army Ammunition Plant – PBC Contract
November 10, 2009

No.	Document in Progress	Submittal Date	Army	Regulator	Next Submittal	Expected Date	Army	Regulator	Comment Resolution	Status	Remarks
19	Draft Final Decision Document, LHAAP-35/36	7/15/09	x	x	Final	11/30/09	x	x	Resolved	TCEQ comment received on DF DD. Resolution in progress. Revised DF in preparation.	
20	Draft Completion Report, Pistol Range	10/7/09	x		Draft Final	11/12/09	x	x	Comments resolved	Army review completed	
21	Draft Proposed Plan, Pistol Range	10/7/09	x		Draft Final	12/15/09	x	x		Army review complete. RTCs in preparation	

FY2009

LONGHORN ARMY AMMUNITION PLANT

Installation Action Plan

Printed 18 September 2009

Table of Contents

Statement Of Purpose 1

Acronyms 2

Installation Information 4

Cleanup Program Summary 6

Land Use Control (LUC) Summary 8

Parcel Summary 9

Installation Restoration Program 14

- IRP Summary 15
- IRP Contamination Assessment 16
- IRP Previous Studies 17

Installation Restoration Program Site Descriptions 22

- LHAAP-012 ACTIVE LANDFILL (SWMU 12) 23
- LHAAP-016 OLD LANDFILL (SWMU 16) 25
- LHAAP-017 NO 2 FLASHING AREA BRN GROUND(SWMU 17) 27
- LHAAP-018 BURNING GROUND/WASHOUT POND(SWMU 18) 28
- LHAAP-024 FORMER UNLINED EVAP POND (SWMU 24) 29
- LHAAP-029 FORMER TNT PRODUCTION AREA(SWMU 29) 30
- LHAAP-050 FORMER WASTE DISPOSAL FACILITY 31
- LHAAP-067 ABOVE GROUND STORAGE TANK 32
- PBC Longhorn PBC at Longhorn 33

IRP No Further Action Sites Summary 35

Installation Restoration Program Schedule 39

- Installation Restoration Program Milestones 39
- Installation Restoration Program Schedule Chart 41

Military Munitions Response Program 43

- MMRP Summary 44
- MMRP Contamination Assessment 45
- MMRP Previous Studies 46

Table of Contents

Military Munitions Response Program Site Descriptions..... 47
LHAAP-001-R-01 SOUTH TEST AREA / BOMB TEST AREA..... 48
LHAAP-003-R-01 GROUND SIGNAL TEST AREA..... 50

MMRP No Further Action Sites Summary..... 51

Military Munitions Response Program Schedule..... 52
Military Munitions Response Program Milestones..... 52
Military Munitions Response Program Schedule Chart..... 53

Community Involvement..... 54

Statement of Purpose

The purpose of the Installation Action Plan (IAP) is to outline the total multiyear cleanup program for an installation. The plan identifies environmental cleanup requirements at each site or area of concern (AOC), and proposes a comprehensive, installation-wide approach, along with the costs and schedules associated with conducting investigations and taking the necessary remedial actions (RA).

In an effort to coordinate planning information between the restoration manager, Base Realignment and Closure (BRAC), the US Army Environmental Command (USAEC), the executing agencies, regulatory agencies, and the public, an IAP was completed. The IAP is used to track requirements, schedules, and budgets for all major Army installation cleanup programs.

All site-specific funding and schedule information has been prepared according to projected overall Army funding levels and is, therefore, subject to change.

Acronyms

AEDB-R	Army Environmental Database- Restoration
AOC	Area of Concern
ARAR	Applicable or Relevant and Appropriate Requirements
AST	aboveground storage tank
BIP	blow in place
BRAC	Base Realignment and Closure
BRACO	Base Realignment and Closure Office
CA	Corrective Action
CERCLA	Comprehensive Environmental, Response, Compensation and Liability Act
CLI	Caddo Lake Institute
CS	Confirmatory Sampling
cy	cubic yards
DD	Decision Document
DERPMIS	Defense Environmental Restoration Program Management Information System
DoD	Department of Defense
EBS	Environmental Baseline Survey
EE/CA	Engineering Evaluation/ Cost Analysis
EOD	Explosive Ordnance Disposal
ER	Emergency Removal
ER,A	Environmental Restoration, Army (formerly DERA)
ESS	Explosives Safety Submission
FFA	Federal Facilities Agreement
FFS	Focused Feasibility Study
FRA	Final Remedial Action
FS	Feasibility Study
FY	Fiscal Year
GWTP	Groundwater Treatment Plan
HTRW	Hazardous, Toxic and Radioactive Waste
IAP	Installation Action Plan
INF	Intermediate-Range Nuclear Force
IRA	Interim Remedial Action
K	Thousand
LAP	Load, Assemble, and Pack
LHAAP	Longhorn Army Ammunition Plant
LTM	Lon-term Management
LUC	land use controls
MC	Munitions Constituents
MEC	Munitions and Explosives of Concern
mm	milimeters
MMRP	Military Munitions Response Program
MNA	Monitored Natural Attenuation
MOA	Memorandum of Agreement
N/A	Not Applicable
NFA	No Further Action
NPL	National Priorities List

Acronyms

PA	Preliminary Assessment
PBA	Performance-based Acquisition
PBC	Performance-Based Contract
PCB	Polychlorinated Biphenyls
PP	Proposed Plan
ppm	parts per million
RA	Remedial Action
RA(C)	Remedial Action-Construction
RA(O)	Remedial Action - Operation
RAB	Restoration Advisory Board
RC	Response Complete
RCRA	Resource Conservation and Recovery Act
RD	Remedial Design
RFA	RCRA Facility Assessment
RI	Remedial Investigation
RIP	Remedy-in-Place
RMIS	Restoration Management Information System
ROD	Record of Decision
SI	Site Investigation
SWMU	Solid Waste Management Unit
TAPP	Technical Assistance for Public Participation
TBD	To be determined
TCE	Trichloroethylene
TCEQ	Texas Commission on Environmental Quality
TERC	Total Environmental Restoration Contract
TNT	Trinitrolouene
TRC	Technical Review Committee
TWC	Texas Water Commission
UEP	unlined evaporation pond
ug/L	micrograms per liter
USACE	US Army Corps of Engineers
USAEC	US Army Environmental Command
USATHAMA	US Army Toxic and Hazardous Materials Agency (currently called USAEC)
USEPA	US Environmental Protection Agency
USFWS	United States Fish and Wildlife Service
USSR	Union of Soviet Socialist Republics
VOC	volatile organic compound
WP	White Phosphorous
WWII	World War II
WWTP	Wastewater Treatment Plant

Installation Information

Installation Locale

Installation Size (Acreage): 8,416.00
City: Marshall
County: Harrison
State: Texas
Other Locale Information

The Longhorn Army Ammunition Plant (LHAAP) is located in central east Texas, in the northeast corner of Harrison County, approximately 14 miles northeast of Marshall, Texas, and 40 miles west of Shreveport, LA. The closed installation currently occupies approximately 1,400 of its original 8,416 acres between State Highway 43 and the western shore of Caddo Lake. The area surrounding LHAAP is primarily rural and consists of forest lands, the small towns of Karnack and Uncertain, Texas, Caddo Lake, and Caddo Lake State Park.

Installation Mission

LHAAP was an Army Materiel Command installation which the Army declared excess to its needs in July 1997. While active, the installation's mission was the production of trinitrotoluene (TNT) (World War II (WWII) era only), pyrotechnic items, and rocket motors. In 2003, the BRAC Division was tasked with its disposal.

Lead Organization

Base Realignment and Closure Division

Lead Executing Agencies for Installation

US Army Corps of Engineers (USACE), Tulsa District

Regulator Participation

Federal	US Environmental Protection Agency (USEPA), Region VI
State	Texas Commission on Environmental Quality (TCEQ)

National Priorities List (NPL) Status

A score of 40 was recorded on 01-AUG-90.

Final RA(C) Completion Date: 201005

Date for NPL Deletion

IR: N/A
MR: N/A

Installation Restoration Advisory Board (RAB)/Technical Review Committee (TRC)/Technical Assistance for Public Participation (TAPP) Status

RAB established 2004

Installation Program Summaries

IRP

Primary Contaminants of Concern: Explosives, Metals, Munitions constituents (MC), Perchlorate, Volatiles (VOC)

Affected Media of Concern: Groundwater, Sediment, Soil, Surface Water

Installation Information

MMRP

Primary Contaminants of Concern: Explosives

Affected Media of Concern: Groundwater, Soil

Cleanup Program Summary

Installation Historic Activity

LHAAP was established in October 1942, with the primary mission of producing 2,4,6-TNT flake. Monsanto Chemical Company was the first contract operator of the plant. Production of 2,4,6-TNT continued through WWII until August 1945, when the plant went on standby status until February 1952. From then until 1956, Universal Match Corporation was the contracting operator, producing such pyrotechnic ammunition as photoflash bombs, simulators, hand signals, and tracers for 40 millimeter (mm) ammunition. With the departure of Universal Match Corporation in 1956, Thiokol assumed this responsibility, along with rocket motor production. Production of rocket motors continued to be the primary mission of LHAAP until 1965, when the production of pyrotechnic and illuminating ammunition was re-established.

Prior to 1994, operations consisted of compounding pyrotechnic and propellant mixtures, load assemble and pack (LAP) activities, accommodating receipt and shipment of containerized cargo, and maintenance and/or layaway of standby facilities and equipment as they apply to mobilization planning. The installation was also responsible for the static firing and elimination of Pershing I and II rocket motors in compliance with the intermediate-range nuclear force (INF) treaty in effect between the US and the former Union of Soviet Socialist Republics (USSR). In October 1996, a lease in excess of 1,000 of the 8,416 acres was granted to the Caddo Lake Institute (CLI) for biological and ecological studies by local schools and universities.

In July 1997 the plant became inactive and excess to the Army's needs. In July 1998 the Army contracted EarthTech, Inc. to liquidate all personal property and specific installed property. That contract was completed in Fiscal Year (FY) 2000. In 1999 the Army contracted with Project Development Corporation to demolish specified structurally unsafe buildings. In 2003 the demolition of all remaining buildings began. The demolition of the power plant was completed in 2009. Only the transformers remaining, all planned demolition has taken place. A memorandum of agreement (MOA) between the Army and the US Fish and Wildlife Service (USFWS), was signed on Oct. 21, 2000 designating an area, consisting of approximately 7,200 acres, for establishment of a wildlife refuge overlay at LHAAP. In October 2002 LHAAP was transferred to the Base Realignment and Closure Office (BRACO) to manage as an excess property. In April 2004, the Army and the USFWS entered into a MOA that set forth the transfer process of LHAAP acreage. Since May 2004, approximately 7,000 LHAAP acres have been transferred to the USFWS. The USFWS manages these acres as the Caddo Lake National Wildlife Refuge within the perimeter fence of the former installation. Although the perimeter fence and gates remain functional, guards are no longer posted since the Army's security contract expired on March 14, 2007. The CLI lease with the Army was transferred to the USFWS with the affected acreage.

Regulatory Status

On Aug. 9, 1990 the LHAAP was placed on the NPL. After being listed on the NPL, LHAAP, the USEPA, and the Texas Water Commission (TWC) (now called the TCEQ) entered into a Comprehensive Environmental Response Compensation and Liability Act (CERCLA) Section 120 Agreement for remedial activities at LHAAP. The CERCLA Section 120 agreement, referred to as the federal facility agreement (FFA), became effective Dec. 30, 1991. The installation applied for a Resource Conservation and Recovery Act (RCRA) Part A permit.

In February 1992 a RCRA Part B permit was signed. As a result, a RCRA facility assessment (RFA) identified 57 potential sites of concern. Since that time, scrubbing of the list [removal of non-Environmental Restoration, Army (ER,A) eligible sites, redundancies, etc.] has resulted in the current Army Environmental Database - Restoration (AEDB-R) list of 47 sites. In late 2007, the USEPA Region VI clarified their view of the NPL status of LHAAP as consisting of only those sites listed in the FFA and any additional sites with significant contamination. During a meeting between the Army, the USEPA and the TCEQ held in February 2008 at TCEQ headquarters, regulators and the Army agreed on the sites that will be addressed as NPL, including those listed and those considered to be NPL-caliber. The NPL sites are LHAAP-01*, LHAAP-04, LHAAP-11*, LHAAP-12*, LHAAP-13*, LHAAP-14*, LHAAP-16*, LHAAP-17*, LHAAP-18*, LHAAP-24*, LHAAP-27*, LHAAP-29*, LHAAP-32*, LHAAP37, LHAAP-46, LHAAP-47, LHAAP-49, LHAAP-50, LHAAP-54*, LHAAP-58, and LHAAP-67. The USEPA will continue to provide review and concurrence on documents related to these sites and will co-sign records of decision (RODs). The schedule for each of these sites will be described in this IAP, which will serve as formal documentation of the resolution between the Army and USEPA. [* indicates the sites listed in the FFA.]

The non-NPL sites will be addressed through CERCLA with RCRA issues addressed, as necessary, as applicable or relevant and appropriate requirements (ARARs), with the TCEQ as lead regulator. The USEPA will provide review; however, the decision documents (DDs) will be signed by the Army alone with the TCEQ providing a letter of concurrence. In addition to the site listing of the FFA, an installation assessment by the Army in February 1980 and the RFA in April 1988 identified additional potential sites of concern. The information management system used in the early 1990s [Defense Environmental Restoration Program Management Information system (DERPMIS)] identified 59 sites at that time. In the mid-1990s, the tracking system being used at the time [the restoration management information system (RMIS)], was updated to remove duplicate sites, sites contained within other sites, sites that were not a part of the restoration program, and sites that never existed.

Cleanup Program Summary

Presented in Appendix A - LHAAP Environmental Site Status, is the resulting list of the LHAAP environmental sites, both NPL and non-NPL, with the associated DERPMIS and RMIS numbers. Presented with the sites are their current status and completion dates or projected phase completion dates. At the time of IAP preparation, one site (LHAAP-65) was considered in a 'to be determined' (TBD) status (i.e., neither NPL nor non-NPL). Discussions are ongoing to assign a status.

The following sites have been transferred: LHAAP-001, LHAAP-005, LHAAP-009, LHAAP-011, LHAAP-013, LHAAP-014, LHAAP-015, LHAAP-034, LHAAP-045, LHAAP-052, LHAAP-057, LHAAP-061, LHAAP-063. Site LHAAP-012 has been offered for transfer.

Installation Program Cleanup Progress

IRP

Prior Year Progress:

1. An NFA DD was finalized for LHAAP-6, 7, 8, 48 51, 53, 55, 59, 60, 64, 66, 68, and 002-R
2. A Data Evaluation Report was finalized for LHAAP-35/36
3. A PP was finalized for LHAAP-37/67
4. An EE/CA finalized for LHAAP-4 and Pistol Range
5. An action memorandum drafted for LHAAP-4 and Pistol Range
6. A NFA DD was prepared for LHAAP-2
7. A Site Evaluation Report and Soil Removal Report was prepared for LHAAP-49
8. A ROD completed for LHAAP-32
9. A draft final ROD completed for LHAAP-37/67

Future Plan of Action:

1. RA(O)/LTM will be implemented for LHAAP-08, LHAAP-37, and LHAAP-67
2. A ROD will be completed for LHAAP-16, LHAAP-17, LHAAP-18/24, LHAAP-29, LHAAP-46, LHAAP-47, LHAAP-49, LHAAP-50, and LHAAP-58
3. A ROD will be completed for LHAAP-37 and LHAAP-67

MMRP

Prior Year Progress: The remedial investigation/feasibility study (RI/FS) phase and interim removal action (IRA) are underway.

Future Plan of Action: A ROD will be completed in FY09. The LTM phase will begin.

Land Use Control (LUC) Summary

LUC title: LUC for LHAAP-12 Capping

Site(s): LHAAP-012

ROD/DD title: CAPPING LANDFILLS 12 & 16

Location of LUC

At LHAAP-12

Land Use Restriction: Landfill restriction - Prohibit excavation on LF cap or cover system

Types of Engineering Controls: None

Types of Institutional Controls: Dig Permits

Date in Place: 200706

Modification Date: N/A

Date Terminated: N/A

Inspecting Organization: USACE District

Record of LUC: Master Plan or Equivalent

Documentation Date: 200706

LUC Enforcement: Annual Inspections, 5 Year Reviews

Contaminants: VOC

Additional Information

N/A

Parcel Summary

Summary of Parcel Prioritization and Transfer Strategy

Parcel Name: Burning Ground (FWS)
Parcel Size: 380.00
Associated Sites: LHAAP-017, LHAAP-016, LHAAP-024, LHAAP-018
Transfer Date: 200909
Current Land Use: Other (under remediation)
Future Land Use: Recreational
Encumbrances: N/A
Leases/Permits/Licenses: N/A
Transfer Strategy: Transfer to Other Federal Agencies
Recipient Organization: USFWS
Other Issues Affecting Transfer: N/A

Parcel Name: Debris Landfill
Parcel Size: 13.00
Associated Sites:
Transfer Date: 200909
Current Land Use: Industrial
Future Land Use: Recreational
Encumbrances: N/A
Leases/Permits/Licenses: N/A
Transfer Strategy: Transfer to Other Federal Agencies
Recipient Organization: N/A
Other Issues Affecting Transfer: N/A

Parcel Name: East FIA I (FWS)
Parcel Size: 182.00
Associated Sites:
Transfer Date: 200708
Current Land Use: Recreational
Future Land Use: Other (N/A)
Encumbrances: N/A
Leases/Permits/Licenses: N/A
Transfer Strategy: Transfer to Other Federal Agencies
Recipient Organization: USFWS
Other Issues Affecting Transfer: N/A

Parcel Summary

Parcel Name: East FIA II(FWS)
Parcel Size: 175.00
Associated Sites: PBC Longhorn
Transfer Date: 200909
Current Land Use: Industrial
Future Land Use: Recreational
Encumbrances: N/A
Leases/Permits/Licenses: N/A
Transfer Strategy: Transfer to Other Federal Agencies
Recipient Organization: USFWS
Other Issues Affecting Transfer: N/A

Parcel Name: Fire House (FWS)
Parcel Size: 2.98
Associated Sites:
Transfer Date: 200705
Current Land Use: Recreational
Future Land Use: Other (N/A)
Encumbrances: N/A
Leases/Permits/Licenses: N/A
Transfer Strategy: Transfer to Other Federal Agencies
Recipient Organization: USFWS
Other Issues Affecting Transfer: N/A

Parcel Name: Ground Signal Test (FWS)
Parcel Size: 80.00
Associated Sites: LHAAP-003-R-01
Transfer Date: 200909
Current Land Use: Other (Under remediation)
Future Land Use: Recreational
Encumbrances: N/A
Leases/Permits/Licenses: N/A
Transfer Strategy: Transfer to Other Federal Agencies
Recipient Organization: USFWS
Other Issues Affecting Transfer: N/A

Parcel Summary

Parcel Name: LANDFILL 12 (FWS)
Parcel Size: 51.00
Associated Sites: LHAAP-012
Transfer Date: 200909
Current Land Use: Industrial
Future Land Use: Recreational
Encumbrances: N/A
Leases/Permits/Licenses: N/A
Transfer Strategy: Transfer to Other Federal Agencies
Recipient Organization: USFWS
Other Issues Affecting Transfer: Land Use Control/maintenance costs

Parcel Name: Pistol Range (FWS)
Parcel Size: 1.00
Associated Sites: PBC Longhorn
Transfer Date: 200909
Current Land Use: Other (under remediation)
Future Land Use: Recreational
Encumbrances: N/A
Leases/Permits/Licenses: N/A
Transfer Strategy: Transfer to Other Federal Agencies
Recipient Organization: USFWS
Other Issues Affecting Transfer: N/A

Parcel Name: Production Area II
Parcel Size: 467.00
Associated Sites: PBC Longhorn
Transfer Date: 201009
Current Land Use: Other (Under remediation)
Future Land Use: Recreational
Encumbrances: N/A
Leases/Permits/Licenses: N/A
Transfer Strategy: Transfer to Other Federal Agencies
Recipient Organization: USFWS
Other Issues Affecting Transfer: N/A

Parcel Summary

Parcel Name: Production Area Ia (FWS)
Parcel Size: 456.72
Associated Sites: PBC Longhorn
Transfer Date: 200708
Current Land Use: Residential
Future Land Use: Other (N/A)
Encumbrances: N/A
Leases/Permits/Licenses: N/A
Transfer Strategy: Transfer to Other Federal Agencies
Recipient Organization: USFWS
Other Issues Affecting Transfer: N/A

Parcel Name: Production Area Ib (FWS)
Parcel Size: 107.59
Associated Sites: PBC Longhorn
Transfer Date: 200701
Current Land Use: Recreational
Future Land Use: Other (N/A)
Encumbrances: N/A
Leases/Permits/Licenses: N/A
Transfer Strategy: Transfer to Other Federal Agencies
Recipient Organization: USFWS
Other Issues Affecting Transfer: N/A

Parcel Name: South Test/Bomb (FWS)
Parcel Size: 72.00
Associated Sites: LHAAP-001-R-01
Transfer Date: 200909
Current Land Use: Other (Under remediation)
Future Land Use: Recreational
Encumbrances: N/A
Leases/Permits/Licenses: N/A
Transfer Strategy: Transfer to Other Federal Agencies
Recipient Organization: USFWS
Other Issues Affecting Transfer: N/A

Parcel Summary

Parcel Name: Static Test (FWS)
Parcel Size: 55.00
Associated Sites:
Transfer Date: 200909
Current Land Use: Other (Under remediation)
Future Land Use: Recreational
Encumbrances: N/A
Leases/Permits/Licenses: N/A
Transfer Strategy: Transfer to Other Federal Agencies
Recipient Organization: USFWS
Other Issues Affecting Transfer: N/A

Parcel Name: Y Area (FWS)
Parcel Size: 17.00
Associated Sites:
Transfer Date: 200909
Current Land Use: Other (Under remediation)
Future Land Use: Recreational
Encumbrances: N/A
Leases/Permits/Licenses: N/A
Transfer Strategy: Transfer to Other Federal Agencies
Recipient Organization: USFWS
Other Issues Affecting Transfer: N/A

LONGHORN ARMY AMMUNITION PLANT

Non-BRAC Excess
Installation Restoration Program

IRP Summary

Installation Total Army Environmental Database-Restoration (AEDB-R) Sites/Response Complete (RC) Sites: 48/39

Installation Site Types with Future and/or Underway Phases

1 Above Ground Storage Tank
(LHAAP-067)
2 Burn Area
(LHAAP-017, LHAAP-018)
1 Contaminated Ground Water
(PBC Longhorn)
2 Landfill
(LHAAP-012, LHAAP-016)
1 Surface Impoundment/Lagoon
(LHAAP-024)
2 Waste Lines
(LHAAP-029, LHAAP-050)

Most Widespread Contaminants of Concern

Explosives, Metals, Munitions constituents (MC), Perchlorate, Volatiles (VOC)

Media of Concern

Groundwater, Sediment, Soil, Surface Water

Completed Remedial Actions (Interim Remedial Actions / Final Remedial Actions (IRA/FRA))

Site ID	Site Name	Action	Remedy	FY	Cost
LHAAP-012	ACTIVE LANDFILL (SWMU 12)	IRA	CAPPING	2005	$5.0 K
LHAAP-016	OLD LANDFILL (SWMU 16)	IRA	CAPPING	2005	$14.0 K
LHAAP-012	ACTIVE LANDFILL (SWMU 12)	FRA	NATURAL ATTENUATION	2007	TBD
PBC Longhorn	PBC at Longhorn	FRA	OTHER	2007	TBD
LHAAP-067	ABOVE GROUND STORAGE TANK	FRA	NATURAL ATTENUATION	2008	TBD
LHAAP-035	SUMPS (145) VARIOUS	FRA	GROUND WATER TREATMENT	2009	TBD
LHAAP-035	SUMPS (145) VARIOUS	FRA	WASTE REMOVAL - SOILS	2009	TBD

Duration of IRP

Year of IRP Inception: 197906

Estimated Date for Remedy-In-Place (RIP)/Response Complete (RC): 201005/203709

Date of IRP completion including Long Term Management (LTM): 203909

IRP Contamination Assessment

Contamination Assessment Overview

In early 2008 the installation-wide ecological risk assessment was completed. The performance-based contract (PBC) is conducting additional sampling activities at several sites and finalizing outstanding feasibility studies (FS) and engineering evaluations / cost analysis (EE/CA), with proposed plans (PP) and a record of decision (ROD) to follow during calendar year 2009. Regulatory concurrence was obtained for reports recommending no action for 11 sites: LHAAP-06, LHAAP-07, LHAAP-23, LHAAP-35, LHAAP-36, LHAAP-51, LHAAP-55, LHAAP-60, LHAAP-64, LHAAP-66, and LHAAP-68. DDs were signed for sites LHAAP-6, 7, 48, 51, 55, 60, 64, 66, and 68 in 2008. FSs were completed for all applicable total environmental restoration contract (TERC) sites including the three TERC NPL sites (LHAAP-32, LHAAP-37 and LHAAP-67) in 2008. An ROD document was signed for TERC NPL Site LHAAP-32 in 2008. No action DDs were signed for the remaining TERC sites (LHAAP-8, LHAAP-48, LHAAP-53, and LHAAP-59) in 2008. RODs are scheduled to be signed for LHAAP-37 and 67 in 2009.

Sediment samples collected by the Army from Caddo Lake near the mouths of two branches of Goose Prairie Creek indicated elevated lead and mercury concentrations. The sampling locations are outside of the installation boundary. In 2004 an investigation of contaminants in fish tissue from three Caddo Lake sites, one of which is upgradient at Clinton Lake, was funded by the USEPA Region 6 and performed by the TCEQ Region 5. It concluded that mercury was present at elevated levels from all three sites, dioxin was also present, but highest at Clinton Lake (a lake upstream from LHAAP), and pesticides, polychlorinated biphenyls (PCBs) and perchlorate were not detected in either edible fish fillets or whole fish.

Approximately 7,000 acres of the plant have transferred to the USFWS and are being operated as the Caddo Lake National Wildlife Refuge. The remaining acreage is also expected to transfer to the USFWS as restoration activities are completed.

Cleanup Exit Strategy

As RODs are finalized, ramp-down/exit strategies will continue to be developed.

Ramp-down/exit strategies at the sites will continue to be based on human and environmental exposure.

IRP Previous Studies

	Title	Author	Date
1979			
	Assessment of Contaminant Migration, Longhorn Army Ammunition Plant	Robert H. Balter Co	APR-1979
1980			
	Installation Assessment of Longhorn Army Ammunition Plant, Report No. 150	U.S. Army Toxic and Hazardous Materials Agency	FEB-1980
	Land Disposal Study No. 38-26-0104-81, LHAAP, 23 January - 8 February 1980	USAEHA	MAY-1980
1981			
	Wastewater Engineering Special Study No. 32-62-0182-82	Wastewater Engineering Special Study No. 32-62-0182-82	SEP-1981
1983			
	Phase II, Hazardous Waste Management Special Study No. 39-26-0147-83, DARCOM Open-Burning/Open-Detonation Grounds Evaluation, LHAAP, 31 July - 3 August 1981	USAEHA	SEP-1983
1984			
	Closure of Unlined Evaporation Pond	Kindle, Stone and Associates	JUN-1984
	Longhorn Army Ammunition Plant Contamination Survey, Contract # DAAA09-78-C-3004,	Environmental Protection Systems, Inc	JUN-1984
1986			
	Closure Report, Unlined Evaporation Pond, Longhorn Army Ammunition Plant	Army Corps of Engineers, Tulsa	JUN-1986
1994			
	Interim Risk Assessment for Burning Ground 3 & Unlined Evaporation Pond Sites (18 & 24)	Army Corps of Engineers, Tulsa	JAN-1994
	Soil and Groundwater Background Concentration Study	Army Corps of Engineers, Tulsa	MAY-1994
	Remedial Investigation /Feasibility Study Report for Areas 13 & 14	Army Corps of Engineers, Tulsa	JUN-1994
	Draft Final Workplan Addendum Soil and Groundwater Background Concentration Study	Army Corps of Engineers, Tulsa	JUN-1994
1995			
	Final Soil Background Concentration Report (Revised)	Army Corps of Engineers, Tulsa	MAR-1995
	Groundwater Background Concentration Report	Army Corps of Engineers, Tulsa	MAY-1995
	Final HydroGeologic Assessment Report	Army Corps of Engineers, Tulsa	MAY-1995
	Final Prop Plan of Action for Sites 13 & 14	Army Corps of Engineers, Tulsa	JUN-1995
	Groundwater Sampling Results-May 95, Interim Remedial Action-Phase III, Burning Ground 3 and UEP, LHAAP 18 & 24	Army Corps of Engineers, Tulsa	JUN-1995
	Remedial Investigation/Feasibility Study Report for Sites 13 & 14	Army Corps of Engineers, Tulsa	JUN-1995
	Final Record of Decision for Early Interim Remedial Action at Landfill Sites 12 & 16	Army Corps of Engineers, Tulsa	JUL-1995
1996			

IRP Previous Studies

	Title	Author	Date
1996			
	Final Work Plan for Phase III Interim Remedial Action at Burning Ground 3	Army Corps of Engineers, Tulsa	JAN-1996
	Group 4 Baseline Risk Assessment Work Plan	Army Corps of Engineers, Tulsa	FEB-1996
	Final Project Work Plans, Interim Remedial Action Landfills 12 & 16 Caps	Army Corps of Engineers, Tulsa	JUN-1996
	Group 4 Sumps Groundwater Monitoring Quarterly Report	Army Corps of Engineers	JUN-1996
	Draft Final Design Analysis Report for the Site 16 Time Critical Removal Action	Army Corps of Engineers	JUN-1996
	Draft Final Comprehensive Chemical Data Acquisition Plan for the RI/FS	Army Corps of Engineers, Tulsa	JUL-1996
	Draft Final Field Summary Report for the Phase II, Group 2 Sites Remedial Investigation	Army Corps of Engineers, Tulsa	JUL-1996
	Treatment Simulation and Toxicity Testing Results of Site 16 Groundwater	Army Corps of Engineers, Tulsa	AUG-1996
	Final Project Construction Drawings, Interim Remedial Action, Landfill 12 & 16 Caps	Army Corps of Engineers, Tulsa	AUG-1996
1997			
	Final Remedial Investigation Report Group 1 Sites (Sites 1, 11, 27, and XX) and Vol. 2 Baseline Risk Assessment	Army Corps of Engineers, Tulsa	APR-1997
1998			
	Final Record of Decision for Early Interim Remedial Action at Group 1 Sites	Army Corps of Engineers, Tulsa	FEB-1998
	Group 2 Final Workplan	Army Corps of Engineers, Tulsa	MAR-1998
	Environmental Baseline Study	Army Corps of Engineers, Tulsa	APR-1998
	Group 4 Final Workplan	Army Corps of Engineers, Tulsa	JUL-1998
2000			
	Site 16 Risk Assessment	Army Corps of Engineers, Tulsa	MAR-2000
	Hazardous and Medical Waste Study - Response Complete Verification and Relative Risk Site Evaluation for the Longhorn Army Ammunition Plant	USACHPPM	JUL-2000
	Final Site 16 Remedial Investigation Report	Army Corps of Engineers, Tulsa	OCT-2000
2001			
	Final Remedial Investigation Report for Group 2 Sites	Jacobs Engineering Group, Inc	APR-2001
	Baseline Risk Assessment: Human Health for Site 16 Landfill Remedial Investigation and Feasibility Study	Jacobs Engineering Group, Inc	JUN-2001
	Final Ecological Risk Assessment: Supplement to Site 16 Landfill Remedial Investigation Report	Jacobs Engineering Group, Inc	OCT-2001
2002			
	Final Group 4 Sites Remedial Investigation Report (Sites 35A, 35B, 46, 47, 48, 50, 60, and Goose Prairie Creek)	Jacobs Engineering Group, Inc	JAN-2002
	Final Group 4 Sites Remedial Investigation Addendum (Sites 04, 08, 67, and Hydrocarbon Study)	Jacobs Engineering Group, Inc	FEB-2002
	Final Group 2 Sites Remedial Investigation Report Addendum (Site 49)	Jacobs Engineering Group, Inc	FEB-2002

IRP Previous Studies

	Title	Author	Date
2002			
	Final Feasibility Study for Site 16	Jacobs Engineering Group, Inc	MAR-2002
	Final Five-Year Review for Sites 18 & 24 (Burning Ground No. 3), Site 16 (Old Landfill), and Site 12 (Sanitary Landfill)	Complete Environmental Service	AUG-2002
	Group 2 Sites Baseline Human Health and Screening Ecological Risk Assessment (Sites 12, 17, 18/24, 29, 32, 49, Harrison Bayou, and Caddo Lake)	Jacobs Engineering Group, Inc	AUG-2002
2004			
	Final Installation-Wide Background Study Workplan	Shaw Environmental and Infrastructure	JAN-2004
	Final Groundwater Data Gaps Investigation Workplan (Groups 2 and 4)	Shaw Environmental and Infrastructure	FEB-2004
	Final Technical Memorandum: Modeling Approach for Derivation of Soil and Groundwater Concentrations Protective of Surface Water and Sediment	Shaw Environmental and Infrastructure	MAR-2004
	Final Sediment Sampling Report for Caddo Lake and Clinton Lake	Shaw Environmental and Infrastructure	APR-2004
	Final Environmental Condition of Property I	Shaw Environmental and Infrastructure	MAY-2004
	Final Background Soil Study Report	Shaw Environmental and Infrastructure	JUL-2004
	Final Evaluation of LHAAP-45 Surface Soil Analytical Data	Shaw Environmental and Infrastructure	SEP-2004
	Final Groundwater Data Gaps Investigation Workplan (Groups 2 and 4), Addenda 1 and 2	Shaw Environmental and Infrastructure	SEP-2004
	Final Environmental Condition of Property II	Army Corps of Engineers, Tulsa	NOV-2004
2005			
	Final Site 12 Feasibility Study	Shaw Environmental and Infrastructure	JAN-2005
	Final Environmental Site Assessment Phase I and II Report	Plexus Scientific Corporation	FEB-2005
	Final Feasibility Report for Site 12 Addendum (Revision 2)	Shaw Environmental and Infrastructure	MAR-2005
	Final Proposed Plan for Landfill 12 (LHAAP-12),	Shaw Environmental and Infrastructure	MAR-2005
	Final Project Report Plant-Wide Perchlorate Investigation	Solutions To Environmental Problems (STEP)	APR-2005
	Final Site Inspection Report for the Military Munitions Response Program	Engineering-Environmental Management, Inc	JUN-2005
	Final Feasibility Study for LHAAP-67 (Aboveground Storage Tank Farm),	Shaw Environmental and Infrastructure	AUG-2005
	Final Feasibility Study for LHAAP-35B (37) (Chemical Laboratory)	Shaw Environmental and Infrastructure	OCT-2005
	Final Site Evaluation Report for LHAAP-32 (Former Waste TNT Disposal Plant)	Shaw Environmental and Infrastructure	NOV-2005
2006			
	Final Installation-Wide Work Plan	Shaw Environmental and Infrastructure	JAN-2006
	Decision Documentation for LHAAP-03 (Wastewater	Shaw Environmental and	JAN-2006

IRP Previous Studies

	Title	Author	Date
2006			
	Collection At Paint Shop), LHAAP-06 (Building 54F), and LHAAP-23 (Building 707-C Storage Area for PCBs),	Infrastructure	
	Final Work Plan for Engineering Evaluation / Cost Analysis for Military Munitions Response Program	CAPE	MAR-2006
	Final Background Surface Water and Sediment Study Report	Shaw Environmental and Infrastructure	JUL-2006
	Draft Final Proposed Plan, LHAAP-37 & 67	Shaw Environmental and Infrastructure	JUL-2006
	Final Record of Decision, LHAAP-12	US Army	JUL-2006
	Remainder of PBC docs that have been submitted :	Workplans; Summary report for 46 and pistol range (Draft); Evaluation Report for 02 (Draft)	SEP-2006
	Draft Final Site Evaluation Report, LHAAP-02; Work Plan Addenda for LHAAP-04, 07, 46, 51, 35/36, 29, Pistol Range, and Chromium Specification;	Shaw Environmental and Infrastructure	SEP-2006
	Draft Final Evaluation of Monitored Natural Attenuation, LHAAP-12, 37 & 67	Shaw Environmental and Infrastructure	DEC-2006
2007			
	Final Groundwater Monitoring Report Sites 12 and 16 (Spring 2003, Spring 2004 and Winter 2004)	ALL Consulting	JAN-2007
	Final Modeling Report,Derivation of Soil and Groundwater Concentrations Protective of Surface Water and Sediment, Rev. 01	Shaw Environmental and Infrastructure	FEB-2007
	Final LHAAP-12 Well Abandonment and Installation Report Groundwater, Data Gaps Investigation Groups 2 and 4	Shaw Environmental, Inc.	APR-2007
	Final Site Evaluation Report, LHAAP-48 & 53	Shaw Environmental and Infrastructure	APR-2007
	Final Addendum 11 Monitored Natural Attenuation Sampling LHAAP-16, -17, -29, -46, -47, -50, 35A(58), Final Installation-Wide Work Plan	Shaw Environmental, Inc.	MAY-2007
	Legal Notice - Industrial Solid Waste Notice of Land Use Controls at LHAAP-12	Rose Zeiler, LHAAP Site Manager	JUN-2007
	Final Results of Modeling for Natural Attenuation of Trichloroethene at LHAAP-12	Shaw Environmental, Inc.	JUN-2007
	Evaluation of Perimeter Well Data for Use as Groundwater Background	Shaw Environmental, Inc.	JUN-2007
	Final Natural Attenuation Evaluation LHAAP-12, LHAAP-35B(37) and LHAAP-67 (Report and Appendix A)	Shaw Environmental, Inc.	JUN-2007
	Remedial Design Addendum Landfill 12 (LHAAP-12)	Shaw Environmental, Inc.	JUN-2007
	Baseline Ecological Risk Assessment Surface Water Sampling Plan for Goose Prairie Creek, Revision 01	Shaw Environmental, Inc.	JUL-2007
	Final Results of Modeling for Natural Attenuation of Chlorinated Solvents in Groundwater at LHAAP-35B(37) & 67	Shaw Environmental, Inc.	JUL-2007
	Draft Final Second Five Year Review Report, LHAAP-12, 16, 18 & 24	Shaw Environmental, Inc.	AUG-2007
	Final LHAAP-59 Site Investigation Report	Shaw Environmental, Inc.	AUG-2007
	Memorandum: Supplemental Groundwater Activities at LHAAP-37	Shaw Environmental, Inc.	SEP-2007

IRP Previous Studies

	Title	Author	Date
2007			
	Final Landfill 12 (LHAAP-12) Operating Properly and Successfully Demonstration Report	Shaw Environmental, Inc.	SEP-2007
	Memorandum: Analysis of Soil Samples Collected from LHAAP-59 on September 14, 2007	Shaw Environmental, Inc.	OCT-2007
	Final Installation-Wide Baseline Ecological Risk Assessment Vols. I & II	Shaw Environmental, Inc.	NOV-2007
	Final Site Investigation Report: LHAAP-06, 07, 51, 55, 64, 66 and 68 (rev 1)	Shaw Environmental, Inc.	DEC-2007
2008			
	Final Proposed Plan, LHAAP-08	Shaw Environmental, Inc.	JAN-2008
	Final Data Evaluation Report Chemical Concentrations in soil Samples Associated with LHAAP-35/36 Sumps	Shaw Environmental, Inc.	JAN-2008
	Final Proposed Plan, LHAAP-32	Shaw Environmental, Inc.	JAN-2008
	Final Proposed Plan, LHAAP-48 & 53	Shaw Environmental, Inc.	JAN-2008
	Draft Final LHAAP-32 Record of Decision	Shaw Environmental, Inc.	MAR-2008
	Draft Final LHAAP-08, 48 & 53 Decision Document	Shaw Environmental, Inc.	MAR-2008
	Final Decision Document, LHAAP-6, 7, 51, 55, 64, 66 and 68	Shaw Environmental, Inc.	JUL-2008
	Final LHAAP-32 Record of Decision	Shaw Environmental, Inc.	AUG-2008
	Final LHAAP-59 Decision Document	Shaw Environmental, Inc.	SEP-2008
	Final Five-Year Review Second Five-Year Revise Report for LHAAP-12, 16 and 18/24	Shaw Environmental Inc.	SEP-2008
	Final LHAAP-60 Decision Document	Shaw Environmental, Inc.	OCT-2008
	Final LHAAP-8, 48, 53 and 002-R Decision Document	Shaw Environmental, Inc.	NOV-2008
2009			
	Draft Site Evaluation Report and Soil Removal Report for LHAAP-49	Shaw Environmental, Inc.	JAN-2009
	Draft Final LHAAP-37/67 Record of Decision	Shaw Environmental, Inc.	JAN-2009
	Final Site Investigation Report, LHAAP-2	Shaw Environmental, Inc.	JAN-2009
	Final Engineering Evaluation/Cost Analysis, Former Pistol Range	Shaw Environmental, Inc.	FEB-2009
	Final Engineering Evaluation/Cost Analysis, LHAAP-4	Shaw Environmental, Inc.	MAR-2009

LONGHORN ARMY AMMUNITION PLANT

Non-BRAC Excess

Installation Restoration Program
Site Descriptions

Site ID: LHAAP-012
Site Name: ACTIVE LANDFILL (SWMU 12)

STATUS

Parcel: LANDFILL 12 (FWS) (51 acres)

Regulatory Driver: CERCLA
RRSE: HIGH

Contaminants of Concern: Volatiles (VOC)

Media of Concern: Groundwater

Phases	Start	End
PA	197906	198705
SI	197906	198705
RI/FS	199008	200607
RD	200509	200706
IRA	199509	200509
RA(C)	200509	200706
RA(O)	200509	203709

RIP Date: 200706

RC Date: 203709

SITE DESCRIPTION

Landfill 12 (previously called the active landfill), consisting of seven acres was used for the disposal of non hazardous industrial waste. The landfill had been used intermittently since 1963. Continuous use of the landfill began around 1978. Although the back section had been closed, the front section of the landfill continued to be used until its closure in March 1994. Site Inspections (SI) conducted in 1993 concluded that an early IRA (landfill cap) was necessary to reduce further contamination to the groundwater. In 1997 the cap was completed, using treated soils from LHAAP-18 as subgrade fill. Cap maintenance started in 1998, and in 2002 the first five-year review was completed. The second five-year review was completed in 2008.

In 2002 the remedial investigation (RI) was completed. Groundwater analysis showed that some metals, chlorides, VOC, explosive compounds and low levels of perchlorate were present. Surface water and sediment sample analysis showed similar contamination. Low levels of perchlorate were also detected in the soils. In three groundwater sampling rounds conducted in February 2003, February 2004, and December 2004, perchlorate was not detected with reporting limits of four micrograms per liter (ug/L) in the first two rounds, and only detected twice when a method with a lower reporting limit (0.2 ug/L) was used. Chromium in groundwater is now believed to be related to stainless steel well casings. In January 2006, the 12 wells with stainless steel casings and screen were removed. In 2006, five new wells were installed for long-term monitoring using polyvinyl chloride casing and screen. Results of subsequent groundwater sampling supported the postulation that the stainless steel casing in the monitoring wells was the source of the chromium.

In 2005 the FS was finalized. The recommended final remedy is monitored natural attenuation (MNA) with land use controls (LUC) consisting of cap protective provisions and groundwater restrictions. In August 2006 sampling to support MNA began. The PP addresses human and ecological risk. The ROD has been signed, and in June 2007 the remedial design (RD) addendum was signed. The surrounding sediment and surface water were evaluated as part of the plant-wide ecological risk assessment and no chemicals of concern were identified.

Post-performance-based acquisition (PBA) (FY15 and outyears) actions will include MNA with LUCs consisting of cap protective provisions and groundwater restrictions.

Site ID: LHAAP-012
Site Name: ACTIVE LANDFILL (SWMU 12)

CLEANUP/EXIT STRATEGY

As a part of remedial action - operation (RA(O)), cap maintenance, MNA and five-year reviews will be funded under the PBA through August 2014. Post PBA activities will be limited to five-year reviews to monitor MNA progress and any new site information.

Site ID: LHAAP-016
Site Name: OLD LANDFILL (SWMU 16)

STATUS

Parcel: Burning Ground (FWS) (380 acres)

Regulatory Driver: CERCLA
RRSE: HIGH

Contaminants of Concern: Perchlorate, Volatiles (VOC)

Media of Concern: Groundwater, Soil, Surface Water

Phases	Start	End
PA	197906	198705
SI	197906	198705
RI/FS	199008	200909
RD	200508	200912
IRA	199410	200509
RA(C)	200508	201001
RA(O)	200508	201509
LTM	201509	203909

RIP Date: 201001

RC Date: 201509

SITE DESCRIPTION

Landfill 16 (formally called the old landfill) consisting of about 22 acres, was originally used to dispose of products generated from the TNT wastewater treatment plant (WWTP); however, a variety of waste was disposed of in the landfill until the 1980s. This waste may have included burned rocket motor casings, substandard TNT, barrels of chemicals, oil, paint, scrap iron and wood. VOCs and metals above action levels have been found in the soil, surface water and groundwater around the site. Low levels of explosive compounds were detected in the groundwater.

SIs conducted in 1993 concluded that an early IRA (landfill cap) was necessary to reduce further contamination to the groundwater. The cap was completed in 1998, using treated soils from LHAAP-18 as subgrade fill. In late 1997, as part of the treatability study, eight extraction wells were installed to prevent contaminated groundwater from impacting Harrison Bayou. This system is still in operation; however, extracted water volume is low. Groundwater extracted from the Landfill 16 containment system is piped to the LHAAP-18 Groundwater Treatment Plant (GWTP).

Perchlorate was first detected in groundwater at this site in 2000. VOCs and perchlorate have been detected in the surface water of Harrison Bayou.

In 2002 the RI was completed along with a five-year review. In March 2002 a final interim FS for Site 16 was issued. Under the PBC, a draft FS addendum to the March 2002 interim FS was submitted in February 2007. A preliminary MNA evaluation was completed in 2007. The second five-year review was completed in 2008. Quarterly surface water sampling of the Harrison Bayou area has not shown significant contamination.

An environmental security technology certification program research and development project for enhanced in situ bioremediation (VOCs, perchlorate and explosives in groundwater) was started in 2003 and continued to 2008.

Ecological concerns most likely will be addressed with the final remedy at this site.

Post-PBA actions will include groundwater monitoring.

Site ID: LHAAP-016
Site Name: OLD LANDFILL (SWMU 16)

CLEANUP/EXIT STRATEGY

This site is being addressed under a PBA through August 2014. Actions to be completed before the PBA ends are completion of primary documents (FS, PP, ROD, RD), and accomplishment of RIP, RA(O), and RC. The FS and RD being completed in late 2009 are considering the following remedies for this site: passive and semi-passive biobarriers, in situ bioremediation and MNA for groundwater, and LTM. At this time, it is assumed that the post-PBA LTM will involve monitoring MNA with maintenance of the cap and LUCs.

Site ID: LHAAP-017
Site Name: NO 2 FLASHING AREA BRN GROUND(SWMU 17)

STATUS

Parcel: Burning Ground (FWS) (380 acres)

Regulatory Driver: CERCLA
RRSE: HIGH

Contaminants of Concern: Explosives, Perchlorate, Volatiles (VOC)

Media of Concern: Groundwater, Soil

Phases	Start	End
PA	197906	198705
SI	197906	198705
RI/FS	199008	200912
RD	200508	201004
RA(C)	200508	201005
RA(O)	200508	201509
LTM	201509	203909

RIP Date: 201005

RC Date: 201509

SITE DESCRIPTION

This site (about 500 by 600 feet) was used to burn bulk TNT, photoflash powder, and reject material from Universal Match Corporation's production processes. From 1959 until 1980 the site was operated as a burning ground. In 1959 buildings razed at Site 29 (the former TNT production area) were burned at burning ground No. 2/flashing area (LHAAP-17). This site is situated about 400-500 feet southwest of burning ground No. 3.

In 1984 waste residues were removed and the area grassed over. VOCs and explosive compounds were found in the groundwater. Explosive compounds were found in the soil. In 2000 perchlorate was detected at this site (in groundwater at 300 parts per million (ppm), but less in soil).

In 2002 the RI was completed and a draft FS was prepared. In 2004 additional data gap studies were completed. A revised Draft FS was submitted in 2009 by the PBC.

A research and development project for enhanced in situ-bioremediation (VOCs, perchlorate and explosives in soil and groundwater) was started in 2002 and completed in 2004. Results indicate that perchlorate contamination was reduced. An additional intermediate well was installed at the site in February 2008.

Post-PBA actions during LTM will include MNA for 25 years.

CLEANUP/EXIT STRATEGY

This site is being addressed under a PBA through August 2014. The remedy being considered for this site is groundwater extraction, followed by MNA for groundwater, and excavation and disposal for soil. Tasks to be completed before August 2014 are completion of primary documents (FS, PP, ROD, RD), and accomplishment of RIP, RA(O, RC and the first five years of LTM. It is assumed at this time that the post-PBA LTM will involve monitoring of MNA for an additional 25 years.

Site ID: LHAAP-018
Site Name: BURNING GROUND/WASHOUT POND(SWMU 18)

STATUS

Parcel: Burning Ground (FWS) (380 acres)

Regulatory Driver: CERCLA
RRSE: HIGH

Contaminants of Concern: Metals, Perchlorate, Volatiles (VOC)

Media of Concern: Groundwater, Soil, Surface Water

Phases	Start	End
PA	197906	198705
SI	197906	198705
RI/FS	199008	201002
RD	200508	201004
IRA	199503	201005
RA(C)	200508	201005
RA(O)	200508	201509
LTM	201509	203909

RIP Date: 201005

RC Date: 201509

SITE DESCRIPTION

This site, also known as Burning Ground No. 3 (34.5 acres), began operations in 1955. It was used for the treatment, storage, and disposal of solid and liquid explosives, pyrotechnics, and combustible solvent wastes by open burning, open detonation and burial. The Unlined Evaporation Pond (UEP) (LHAAP-024) was constructed in 1963 within Burning Ground No. 3. Explosive compounds, VOCs, and metals were detected in the soils and groundwater. In 1998 perchlorate was detected in the groundwater. In 1986 sludge from the UEP was removed and the area was capped. Quarterly monitoring has been conducted at the site since closure of the UEP.

In May 1995, an IRA ROD was signed. This IRA addressed soil and shallow groundwater contamination. In 1997, 30,000 cubic yards (cy) of soil was excavated and treated. The treated soil was used as fill in LHAAP-012 and -016. A GWTP, with approximately 5,000 feet of interception collection trenches, has been installed to control migration of contaminated groundwater. After treatment the extracted groundwater is discharged into Harrison Bayou. In 1999 perchlorate was detected at this site and a fluidized bed reactor treatment system was installed.

In 2002 the RI was completed, followed by a draft FS. In September 2007 the PBC contractor began an optimization pilot study for the groundwater extraction system with a report completed in February 2009.

Post-PBA actions during LTM are expected to include MNA for 25 years.

CLEANUP/EXIT STRATEGY

This site is being addressed under a PBA through August 2014. The remedy being considered for this site is optimization of the groundwater extraction system, bioaugmentation and MNA. Tasks to be completed before August 2014 are completion of primary documents (FS, PP, ROD, RD) and accomplishment of RIP and RA(O).

The final remedy has not been selected yet for this site. At this time, the 25 years of post-PBA LTM are expected to include groundwater extraction and bioremediation.

Site ID: LHAAP-024
Site Name: FORMER UNLINED EVAP POND (SWMU 24)

STATUS

Parcel: Burning Ground (FWS) (380 acres)

Regulatory Driver: CERCLA
RRSE: HIGH

Contaminants of Concern: Metals, Perchlorate, Volatiles (VOC)

Media of Concern: Groundwater, Soil

Phases	Start	End
PA	199005	199005
SI	199005	199008
RI/FS	199008	201002
RD	200508	201004
IRA	199503	201005
RA(C)	200508	201005
RA(O)	200508	201509
LTM	201509	203909

RIP Date: 201005

RC Date: 201509

SITE DESCRIPTION

This three-acre UEP was constructed in 1963 within Burning Ground No. 3. Explosive compounds, VOCs, and metals were detected in the soils and groundwater. In 1999, perchlorate was detected in the groundwater. In 1986, sludge from the UEP was removed and the area was capped. Quarterly monitoring has been conducted at the site since closure of the UEP.

In May 1995, an IRA ROD was signed. This IRA addressed soil and shallow groundwater contamination. In 1997, 30,000 cy of soil was excavated and treated. The treated soil was used as fill in LHAAP-012 and LHAAP-016. A GWTP, with approximately 5,000 feet of interception collection trenches, has been installed to control migration of contaminated groundwater. After treatment, the extracted groundwater is discharged into Harrison Bayou. In 1999 perchlorate was detected at this site and in 2001 a fluidized bed reactor treatment system was installed.

In 2002 the RI was completed, followed by a draft FS. In September 2007 the PBC contractor began an optimization study for the groundwater extraction system with a report on the results completed February 2009.

Post-PBA actions are currently expected to include MNA for 25 years during LTM.

CLEANUP/EXIT STRATEGY

This site is being addressed under a PBA through August 2014. As with LHAAP-18, the remedy being considered for this site is optimization of the groundwater extraction system, bioaugmentation and MNA. Tasks to be completed before August 2014 are completion of primary documents (FS, PP, ROD, RD) and accomplishment of RIP and RA(O).

The final remedy has not been selected yet for this site but the 25 years of post-PBA LTM are expected to include groundwater extraction and bioremediation.

Site ID: LHAAP-029
Site Name: FORMER TNT PRODUCTION AREA(SWMU 29)

STATUS

Parcel: NONE

Regulatory Driver: CERCLA
RRSE: HIGH

Contaminants of Concern: Munitions constituents (MC), Perchlorate, Volatiles (VOC)

Media of Concern: Groundwater, Sediment, Soil, Surface Water

Phases	Start	End
PA	197906	198705
SI	197906	198705
RI/FS	199008	200912
RD	200508	201003
RA(C)	200508	201004
RA(O)	200508	201509

RIP Date: 201004

RC Date: 201509

SITE DESCRIPTION

The former TNT production area consisting of about 85 acres was in operation from April 1943 to August 1945 as a six-line plant, with a supporting acid plant. The plant produced 180 million kilograms of TNT throughout the period of operation. A bulk toluene storage area, servicing the TNT Production Area, was located adjacent to the production area. TNT wastewater (red water) from the production of the TNT was sent through wooden pipelines to a storage tank and pump house, and then to the TNT WWTP (LHAAP-032). Cooling water (blue water) from the production area ran through main lines and into an open ditch. In 1959, the structures, except for the foundations, were demolished and removed. Through the late 1980s a portion of the northeast corner of the site (approximately two acres) was used for the washout of Pershing 1 and 2 rocket motor casings using trichloroethylene (TCE) and methylene chloride.

Explosive compounds have been detected in the soil, surface water, sediment, and groundwater samples. High concentrations of VOCs (including TCE and methylene chloride) have been detected in the groundwater with the highest concentrations in the intermediate hydrostratigraphic unit, and methylene chloride, dense non-aqueous phase liquid is suspected. In 2000 perchlorate was first detected in the soil and in the groundwater (at 88 ppm) at this site.

In 2002 the RI was completed and this site is included in the group 2 draft FS. In FY05 field sampling for soils was conducted. In FY06, six wells were installed and sampled. Sediment samples were also collected from waste lines and outfall ditches. A revised draft FS was submitted by the PBC in 2008 and is under regulatory review.

LHAAP-49, the former acid plant (aka former acid storage), was originally funded under LHAAP-29 due to the association in plant function. This was the location where acids were received and prepared for use in the TNT manufacturing process. The final site evaluation is currently under comment resolution.

CLEANUP/EXIT STRATEGY

This site is being addressed under a PBA through August 2014. The remedy being considered for this site is in situ groundwater remediation followed by MNA, and excavation and disposal for soil and sediments. Tasks to be completed before August 2014 are completion of primary documents (FS, PP, ROD, RD), and accomplishment of RIP, RA(O), RC, and LTM. Currently no post-PBA LTM is planned for this site.

Site ID: LHAAP-050
Site Name: FORMER WASTE DISPOSAL FACILITY

STATUS

Parcel: NONE

Regulatory Driver: CERCLA
RRSE: HIGH

Contaminants of Concern: Metals, Perchlorate, Volatiles (VOC)

Media of Concern: Groundwater, Soil

Phases	Start	End
PA	199005	199008
SI	199506	199707
RI/FS	199801	200912
RD	200508	201003
RA(C)	200508	201004
RA(O)	200508	201509

RIP Date: 201004

RC Date: 201509

SITE DESCRIPTION

This site of about one acre received wastewater from the sumps at Plants 2 and 3 from 1955 to the early 1970s. Washout of ammonium perchlorate containers was also performed on this site.

VOCs and perchlorate were detected in the soil samples. VOCs, metals and perchlorate were detected in groundwater.

In 2002 the RI was completed and the FS is in draft form. The VOCs and perchlorates in groundwater pose an acceptable risk. In 2004 an additional data gap sampling was completed and in February 2008 an additional shallow well was installed downgradient of this site.

CLEANUP/EXIT STRATEGY

This site is being addressed under a PBA through August 2014. The remedy being considered for this site is augmented MNA for groundwater, and excavation and disposal for soil. Tasks to be completed before August 2014 are completion of primary documents (EE/CA or FS, PP, ROD, RD), and accomplishment of RIP, RA(O) and RC. Currently no post-PBA LTM is planned for this site.

Site ID: LHAAP-067
Site Name: ABOVE GROUND STORAGE TANK

STATUS

Parcel: NONE

Regulatory Driver: CERCLA
RRSE: MEDIUM

Contaminants of Concern: Petroleum, Oil and Lubricants (POL), Volatiles (VOC)

Media of Concern: Groundwater, Soil

Phases	Start	End
PA	199005	199008
SI	199809	199906
RI/FS	200110	200809
RA(C)	200609	200809
RA(O)	200609	201509

RIP Date: 200809

RC Date: 201509

SITE DESCRIPTION

This site consisted of seven aboveground storage tanks (ASTs) containing Number 2 fuel oil, kerosene or solvents. The ASTs had earthen dikes sufficient to contain a potential spill. Motor fuel tanks were registered with the state and have been removed. Central Creek runs to the south of this site.

In 2001, VOCs (TCE, 1,1-dichloroethene, 1,2-dichloroethane, 1,1,2-trichloroethane) were detected in the groundwater. The data indicates that the impact is limited.

In 2002 the RI was completed and in 2004 additional sampling was conducted, with the final FS completed in August 2005.

CLEANUP/EXIT STRATEGY

A final ROD is being prepared for signature in 2009. The remedy is expected to contain MNA and groundwater restrictions. RA(O) will be under the PBA until 2014. Currently no post-PBA LTM is planned for this site.

Site ID: PBC Longhorn
Site Name: PBC at Longhorn

STATUS

Parcel: Pistol Range (FWS) (1 acres),East FIA II(FWS) (175 acres),Production Area II (467 acres),Production Area Ib (FWS) (107.59 acres),Production Area Ia (FWS) (456.72 acres)

Regulatory Driver: CERCLA

RRSE: LOW

Contaminants of Concern: Explosives, Metals, Perchlorate, Volatiles (VOC)

Media of Concern: Groundwater

Phases	Start	End
PA	200501	200503
RD	200504	200508
RA(C)	200508	200709
RA(O)	200508	201509

RIP Date: 200709

RC Date: 201509

SITE DESCRIPTION

The PBC was awarded in September 2005 to Shaw Environmental. The goal was to achieve RIP by September 2007; however delays were encountered that prevented this. The following is the 2009 status of the sites.
- LHAAP-02: Vacuum Truck Overnight Parking Lot-No further action (NFA) DD drafted in the Second Quarter 2009
- LHAAP-03: Building 722 Paint Shop-Draft Final SI Report under Regulator review in 1st Qtr 2009
- LHAAP-04: Pilot Wastewater Treatment Plant-EE/CA finalized and Action Memorandum drafted in 1st Qtr 2009
- LHAAP-06: Building 54F Solvent-NFA DD signed in 2008
- LHAAP-07: Bldg 50G Drum Processing-NFA DD signed in 2008
- LHAAP-16: Old Landfill (Solid Waste Management Unit (SWMU) 16)-Draft Final FS under review in 1st Qtr 2009
- LHAAP-17: No. 2 Flashing Area/Burning Ground (SWMU 17)-Draft FS under Army Review in 1st Qtr 2009
- LHAAP-18: Burning Ground/Washout Pond (SWMU 18)-Draft FS under review in the Second Quarter 2009
- LHAAP-23: Building 707-C Storage Area for PCBs-Regulator approval received for No Action in FY2006
- LHAAP-24: Former Unlined Evaporation Pond (SWMU 24)-Draft FS under Army review in the Second Quarter 2009
- LHAAP-29: Former TNT Production Area (SWMU 29)-Draft Final FS under review in the Second Quarter 2009
- LHAAP-35: Sumps (145) Various-Draft Final Addendum prepared in the First Quarter 2009, Army seeking resolution for LHAAP-65
- LHAAP-36: Explosive Waste Pads (27)-Draft Final Addendum prepared in the First Quarter 2009
- LHAAP-46: Plant 2/Pyrotechnic Operation-Draft Final Focused Feasibility Study (FFS) under review in the Second Quarter 2009
- LHAAP-47: Plant 3 Area, Solid Rocket Fuel Motor Production-Draft FFS under review in the Second Quarter 2009
- LHAAP-49: Former Acid Storage Area-Draft Final Site Evaluation Report under review in the Second Quarter 2009
- LHAAP-50: Former Waste Disposal Facility-Draft Final FS under review in the Second Quarter 2009
- LHAAP-51 Photographic Laboratory Building 60B-NFA DD signed in 2008
- LHAAP-55 Septic Tanks-NFA DD signed in 2008
- LHAAP-58: Maintenance Complex-Draft Final FS under review in the Second Quarter 2009
- LHAAP-60: Former Storage Building 411 & 714-NFA DD signed in 2008
- LHAAP-64 Transformer Storage (Southwest Building of 707-B)-NFA DD signed in 2008
- LHAAP-66 Transformer at Building 401-NFA DD signed in 2008
- LHAAP-68: Mobile Storage Tank Parking Area-NFA DD signed in 2008
- Pistol Range-EE/CA finalized and Action Memorandum drafted in the Second Quarter 2009

Site ID: PBC Longhorn
Site Name: PBC at Longhorn

CLEANUP/EXIT STRATEGY

These sites are being addressed under a PBA through August 2015. Any follow-on actions will be funded under a separate contract mechanism.

IRP No Further Action Sites Summary

Site ID	Site Name	NFA Date	Documentation
LHAAP-001	INERT BURNING GROUNDS (SWMU 1)	199801	ROD for NFA - signed January 1998 (Group 1). Seven wells (104, 01MW01, 01MW02, 01MW03, 01MW04, 01MW05, 01WW01) are present that need to be abandoned. The property has been transferred to the USFWS.
LHAAP-002	VACCUM TRUCK OVERNITE PARKING LOT	198705	Closure to be obtained under PBC. RTCs for Draft Final SI under regulator review. RC projected for Sept 09.
LHAAP-003	BUILDING 722-PAINT SHOP	198705	Closure to be obtained under PBC. Preparing RTCs to Draft Final SI. RC projected for Sept 09.
LHAAP-004	LHAAP PILOT WASTEWATER TREATMENT PLANT	198705	Phase I investigation 1994; Closure of Sumps - completed 1998; WWTP Closed on 9/27/99; RI - completed February 2002; Closure to be obtained under PBC. Perchlorate contamination in soil. Well abandonment of five wells (LHSMW01, LHSMW02, 04WW01, 04WW02, 04WW03) to be performed under PBC. RC projected for June 2009.
LHAAP-005	POWER HOUSE BOILER POND	198705	RCRA Closure under NPDES Permit(1999). No further action planned. The property has been transferred to the USFWS.
LHAAP-006	BUILDING 54F SOLVENT	198705	Closure to be obtained under PBC. Final SI report completed in December 2007. A no action decision document signed in 2008.
LHAAP-007	BUILDING 50G DRUM PROCESSING	198705	Closed on 11/27/00; Under investigation. Closure to be obtained under PBC. Final SI report completed Dec 2007. A no action decision document was signed in 2008.
LHAAP-008	SEWAGE TREATMENT PLANT	198705	RCRA Closure (for the sludge drying beds but not the plant); FS completed. Closure to be obtained under current TERC. Proposed Plan finalized Jan 2008. NA decision document was signed in 2008. Although no remedy is being implemented, industrial use notification to be recorded in county and five year reviews will be conducted. LTM/RAO to be handled under PBC through 2015. Two wells (08WW01, 08WW02) to be abandoned under PBC.
LHAAP-009	BUILDING 31-W DRUM STORAGE	198705	RCRA Closure, Closed on 11/18/99; (Complete Environmental Services, October 1999, Final Closure Report,

IRP No Further Action Sites Summary

Site ID	Site Name	NFA Date	Documentation
			Hazardous Waste Storage Area 31-W RCRA Permit 50195 Unit No. 001). No further remedial action planned. Transferred to USFWS May 2004.
LHAAP-011	SUS TNT BURIAL SITE AT AVE P&Q(SWMU 11)	199801	ROD for NFA - signed January 1998 (Group 1); Transferred to the USFWS May 2004. Three wells (11WW01, 11WW02, 11WW03) are present that need to be abandoned.
LHAAP-013	SUS TNT BET ACTIVE&OLD LANDFILL(SWMU 13)	199512	RI/FS - completed June 1995; PP - June 1995; ROD for NFA - signed February 1996(Group 3); Transferred to the USFWS May 2004. One well (13WW01) is present on this site that needs to be abandoned.
LHAAP-014	AREA 54 BURIAL GRND (SWMU 14)	199512	RI/FS - completed June 1995; PP - June 1995; ROD for NFA - signed February 1996 (Group 3); Transferred to the USFWS May 2004. One well (14WW01) is present on this site that needs to be abandoned.
LHAAP-015	AREA 49W DRUM STORAGE	198705	RCRA closure. Closed on 10/14/99; (Complete Environmental Services, October 1999, Final Closure Report, Hazardous Waste Storage Area 49-W RCRA Permit 50195 Unit No. 002). No further remedial action planned. Transferred to USFWS May 2004.
LHAAP-019	CONSTRUCTION MATERIALS LANDFILL	198705	PA/SI - NFA; DD Required; Currently used for demolition debris. This site is not DERA funded.
LHAAP-023	BUILDING 707-STORAGE AREA PCBS	198705	RCRA closure. Closed on 11/27/2000. No further action planned. Regulator concurrence of decision documentation provided in letters (USEPA 16 Feb 2006; TCEQ 1 May 2006).
LHAAP-027	SOUTH TEST AREA/BOMB TEST AREA(SWMU 27)	199801	ROD for NFA - signed January 1998 (Group 1). Site currently being evaluated under MMRP as site LHAAP-001-R-01. Final MRRP EE/CA completed Oct 2007. Removal action was completed in November 2008. Six wells (131, 132, 27WW01, 27WW02, 27WW03, 27WW04) are present that need to be abandoned.
LHAAP-032	FORMER TNT WASTEWATER PLT(SWMU 32)	200809	
LHAAP-034	BUILDING 701 PCB STORAGE	198705	PA/SI - NFA; RCRA Closure; Closed on 7/14/00; No further remedial action planned.

IRP No Further Action Sites Summary

Site ID	Site Name	NFA Date	Documentation
			Transferred to the USFWS May 2004
LHAAP-035	SUMPS (145) VARIOUS	200908	
LHAAP-036	EXPLOSIVE WASTE PADS (27)	198705	Closure to be obtained under PBC. RC completion projected for Sep 09.
LHAAP-037	CHEMICAL LABORATORY WASTE PAD	199008	RI - completed in February 2002 (Group 4). Site originally funded under LHAAP-35 (Group 4 sites). Closure to be obtained under current TERC. Proposed plan was presented in June 2008. A ROD is expected to be signed in September 2009. LTM/RAO to be handled under PBC through 2015. Eight wells (LHSMW58, 35BWW01, 35BWW02, 35BWW03, 35BWW04, 35BWW05, 35BWW06, 35BWW07 and 35BWW08) are currently at site. 35BWW07 was installed in LHAAP-47 to define extent of LHAAP-37 GW plume.
LHAAP-039	25X WASHOUT PAD	199008	PP - September 1994; Combined with LHAAP-18/24 IRA - Capping Site 18 1986; IRA - Soil Removal and Capping 1986; LTM - Groundwater Monitoring System Installed 1989;
LHAAP-045	MAGAZINE AREA	200409	PA/SI NFA; EPA concurrence letter for NFI dtd 18 August 2004. No further action planned. The property has been transferred to the USFWS.
LHAAP-051	PHOTOGRAPHIC LABORATORY/BLDG #60B	199008	PA/SI NFA; Closure to be handled under PBC. Additional sampling performed under PBC with SI report completed Dec 2007. Decision document was signed in 2008.
LHAAP-052	MAGAZINE AREA WASHOUT	199805	PA/SI NFA; EPA NFI letter dtd 18 May 1998 (Group 5). No further remedial action planned. The property has been transferred to the USFWS.
LHAAP-053	STATIC TEST AREA	200809	
LHAAP-054	GRD SIGNAL TEST AREA (LHAAP-XX)	199801	ROD for NFA - signed January 1998 (Group 1). Site currently being evaluated under MMRP as site LHAAP-003-R-01. MRRP EE/CA completed Oct 2007. Removal action was completed in November 2008. ROD is expected to be signed in September 2009. Two monitoring wells (127,128) are present that need to be abandoned.
LHAAP-055	SEPTIC TANK (10)	199008	PA/SI NFA; Closure to be handled under PBC. Additional sampling performed under PBC with SI report

IRP No Further Action Sites Summary

Site ID	Site Name	NFA Date	Documentation
			completed Dec 2007. A no action decision document was signed in 2008.
LHAAP-057	RUBBLE BURIAL SITE	199008	PA/SI NFA; No further remedial action planned. Transferred to the USFWS May 2004.
LHAAP-058	MAINTENANCE COMPLEX	199506	RI - completed in February 2002. Closure to be handled under PBC. Draft Final FS was submitted and is under review. RC projected for September 09.
LHAAP-060	FORMER STORAGE BUILDING #411 & #714	200402	RI - completed in February 2002; Closure to be handled under PBC. A decision document was signed in December 2008.
LHAAP-061	POTABLE WTP SEDIMENT POND	199008	No Further Investion is required. No further action planned. The property has been transferred to the USFWS.
LHAAP-063	BURIAL PITS	199805	PA/SI NFA; No further remedial action planned. Letter of concurrence from EPA dated 18 May 1998;(Group 5) Transferred to the USFWS May 2004
LHAAP-064	TRANSFORMER STORAGE	199506	PA/SI NFA; Closure to be handled under PBC. Additional sampling performed under PBC with SI report in completed Dec 2007. A no action decision document was signed in 2008.
LHAAP-066	TRANSFORMER AT BLDG 401	199506	PA/SI NFA; Closure to be handled under PBC. Additional sampling performed under PBC with SI report complted Dec 2007. A no action decision document was signed in 2008.
LHAAP-068	MOBILE STORAGE TANK PARKING AREA	199008	Closure to be handled under PBC. Additional sampling performed under PBC with SI report completed Dec 2007. A no action decision document was signed in 2008.
LHAAP-069	SERVICE STATION UST'S	199306	Corrected under RCRA Guidelines. No further remedial action planned.
LHAAP-070	LOADING DOCK-MAGAZINE AREA	199506	PA/SI NFA; EPA concurrence letter for NFI dtd 18 August 2004; No further remedial action planned. Transferred to the USFWS May 2004.
LHAAP-071	OIL SPILL, BLDG 813	199506	PA/SI NFA; Remedial action taken; No further remedial action planned. EPA concurrence letter for NFI dtd 18 August 2004. Transferred to the USFWS May 2004.

IRP Schedule

Date of IRP Inception: 197906

Past Phase Completion Milestones

1984	
PA	(LHAAP-001 - INERT BURNING GROUNDS (SWMU 1))
SI	(LHAAP-001 - INERT BURNING GROUNDS (SWMU 1))
1987	
SI	(LHAAP-011 - SUS TNT BURIAL SITE AT AVE P&Q(SWMU 11), LHAAP-012 - ACTIVE LANDFILL (SWMU 12), LHAAP-013 - SUS TNT BET ACTIVE&OLD LANDFILL(SWMU 13), LHAAP-014 - AREA 54 BURIAL GRND (SWMU 14), LHAAP-016 - OLD LANDFILL (SWMU 16), LHAAP-017 - NO 2 FLASHING AREA BRN GROUND(SWMU 17), LHAAP-018 - BURNING GROUND/WASHOUT POND(SWMU 18), LHAAP-027 - SOUTH TEST AREA/BOMB TEST AREA(SWMU 27), LHAAP-029 - FORMER TNT PRODUCTION AREA(SWMU 29), LHAAP-032 - FORMER TNT WASTEWATER PLT(SWMU 32), LHAAP-035 - SUMPS (145) VARIOUS)
CS	(LHAAP-019 - CONSTRUCTION MATERIALS LANDFILL, LHAAP-023 - BUILDING 707-STORAGE AREA PCBS, LHAAP-034 - BUILDING 701 PCB STORAGE, LHAAP-036 - EXPLOSIVE WASTE PADS (27))
PA	(LHAAP-002 - VACCUM TRUCK OVERNITE PARKING LOT, LHAAP-006 - BUILDING 54F SOLVENT, LHAAP-011 - SUS TNT BURIAL SITE AT AVE P&Q(SWMU 11), LHAAP-012 - ACTIVE LANDFILL (SWMU 12), LHAAP-013 - SUS TNT BET ACTIVE&OLD LANDFILL(SWMU 13), LHAAP-014 - AREA 54 BURIAL GRND (SWMU 14), LHAAP-016 - OLD LANDFILL (SWMU 16), LHAAP-017 - NO 2 FLASHING AREA BRN GROUND(SWMU 17), LHAAP-018 - BURNING GROUND/WASHOUT POND(SWMU 18), LHAAP-027 - SOUTH TEST AREA/BOMB TEST AREA(SWMU 27), LHAAP-029 - FORMER TNT PRODUCTION AREA(SWMU 29), LHAAP-032 - FORMER TNT WASTEWATER PLT(SWMU 32), LHAAP-035 - SUMPS (145) VARIOUS, LHAAP-071 - OIL SPILL, BLDG 813)
RFA	(LHAAP-003 - BUILDING 722-PAINT SHOP, LHAAP-004 - LHAAP PILOT WASTEWATER TREATMENT PLANT, LHAAP-005 - POWER HOUSE BOILER POND, LHAAP-007 - BUILDING 50G DRUM PROCESSING, LHAAP-008 - SEWAGE TREATMENT PLANT, LHAAP-009 - BUILDING 31-W DRUM STORAGE, LHAAP-015 - AREA 49W DRUM STORAGE, LHAAP-019 - CONSTRUCTION MATERIALS LANDFILL, LHAAP-023 - BUILDING 707-STORAGE AREA PCBS, LHAAP-034 - BUILDING 701 PCB STORAGE, LHAAP-036 - EXPLOSIVE WASTE PADS (27), LHAAP-070 - LOADING DOCK-MAGAZINE AREA)
1990	
SI	(LHAAP-024 - FORMER UNLINED EVAP POND (SWMU 24), LHAAP-054 - GRD SIGNAL TEST AREA (LHAAP-XX))
RFA	(LHAAP-037 - CHEMICAL LABORATORY WASTE PAD, LHAAP-039 - 25X WASHOUT PAD, LHAAP-051 - PHOTOGRAPHIC LABORATORY/BLDG #60B, LHAAP-053 - STATIC TEST AREA, LHAAP-055 - SEPTIC TANK (10), LHAAP-057 - RUBBLE BURIAL SITE, LHAAP-058 - MAINTENANCE COMPLEX, LHAAP-064 - TRANSFORMER STORAGE, LHAAP-066 - TRANSFORMER AT BLDG 401)
ISC	(LHAAP-069 - SERVICE STATION UST'S)
PA	(LHAAP-024 - FORMER UNLINED EVAP POND (SWMU 24), LHAAP-045 - MAGAZINE AREA, LHAAP-050 - FORMER WASTE DISPOSAL FACILITY, LHAAP-052 - MAGAZINE AREA WASHOUT, LHAAP-054 - GRD SIGNAL TEST AREA (LHAAP-XX), LHAAP-060 - FORMER STORAGE BUILDING #411 & #714, LHAAP-061 - POTABLE WTP SEDIMENT POND, LHAAP-063 - BURIAL PITS, LHAAP-067 - ABOVE GROUND STORAGE TANK, LHAAP-068 - MOBILE STORAGE TANK PARKING AREA)
1995	
CS	(LHAAP-058 - MAINTENANCE COMPLEX, LHAAP-064 - TRANSFORMER STORAGE, LHAAP-066 - TRANSFORMER AT BLDG 401, LHAAP-070 - LOADING DOCK-MAGAZINE AREA)
SI	(LHAAP-071 - OIL SPILL, BLDG 813)
1996	
RI/FS	(LHAAP-013 - SUS TNT BET ACTIVE&OLD LANDFILL(SWMU 13), LHAAP-014 - AREA 54 BURIAL GRND (SWMU 14))

IRP Schedule

1997	
SI	(LHAAP-050 - FORMER WASTE DISPOSAL FACILITY, LHAAP-060 - FORMER STORAGE BUILDING #411 & #714)
1998	
SI	(LHAAP-052 - MAGAZINE AREA WASHOUT, LHAAP-063 - BURIAL PITS)
RI/FS	(LHAAP-001 - INERT BURNING GROUNDS (SWMU 1), LHAAP-011 - SUS TNT BURIAL SITE AT AVE P&Q(SWMU 11), LHAAP-027 - SOUTH TEST AREA/BOMB TEST AREA(SWMU 27), LHAAP-054 - GRD SIGNAL TEST AREA (LHAAP-XX))
1999	
SI	(LHAAP-067 - ABOVE GROUND STORAGE TANK)
2001	
SI	(LHAAP-045 - MAGAZINE AREA)
2004	
RI/FS	(LHAAP-045 - MAGAZINE AREA, LHAAP-060 - FORMER STORAGE BUILDING #411 & #714)
2005	
PA	(PBC Longhorn - PBC at Longhorn)
RD	(PBC Longhorn - PBC at Longhorn)
IRA	(LHAAP-012 - ACTIVE LANDFILL (SWMU 12), LHAAP-016 - OLD LANDFILL (SWMU 16))
2006	
RI/FS	(LHAAP-012 - ACTIVE LANDFILL (SWMU 12))
2007	
RD	(LHAAP-012 - ACTIVE LANDFILL (SWMU 12))
RA(C)	(LHAAP-012 - ACTIVE LANDFILL (SWMU 12), PBC Longhorn - PBC at Longhorn)
RI/FS	(LHAAP-032 - FORMER TNT WASTEWATER PLT(SWMU 32))
2008	
LTM	(LHAAP-032 - FORMER TNT WASTEWATER PLT(SWMU 32), LHAAP-053 - STATIC TEST AREA)
RA(C)	(LHAAP-067 - ABOVE GROUND STORAGE TANK)
RI/FS	(LHAAP-067 - ABOVE GROUND STORAGE TANK)

Projected Phase Completion Milestones

See attached schedule

Projected Record of Decision (ROD)/Decision Document (DD) Approval Dates

Site ID	Site Name	ROD/DD Title	ROD/DD Date
LHAAP-017	NO 2 FLASHING AREA BRN GROUND(SWMU 17)	Flashing Area/Burning Grnd No 2:LHAAP-17	20091031

Final RA(C) Completion Date: 201005

NPL Deletion Date: N/A

Schedule for Next Five-Year Review: N/A

Estimated Completion Date of IRP at Installation (including LTM phase): 203909

LONGHORN ARMY AMMUNITION PLANT IRP Schedule

= phase underway

SITE ID	SITE NAME	PHASE	FY10	FY11	FY12	FY13	FY14	FY15+
LHAAP-012	ACTIVE LANDFILL (SWMU 12)	PA						
		SI						
		RI/FS						
		RD						
		IRA						
		RA(C)						
		RA(O)						
SITE ID	SITE NAME	PHASE	FY10	FY11	FY12	FY13	FY14	FY15+
LHAAP-016	OLD LANDFILL (SWMU 16)	PA						
		SI						
		RI/FS						
		RD						
		IRA						
		RA(C)						
		RA(O)						
		LTM						
SITE ID	SITE NAME	PHASE	FY10	FY11	FY12	FY13	FY14	FY15+
LHAAP-017	NO 2 FLASHING AREA BRN GROUND(SWMU 17)	PA						
		SI						
		RI/FS						
		RD						
		RA(C)						
		RA(O)						
		LTM						
SITE ID	SITE NAME	PHASE	FY10	FY11	FY12	FY13	FY14	FY15+
LHAAP-018	BURNING GROUND/WASHOUT POND(SWMU 18)	PA						
		SI						
		RI/FS						
		RD						
		IRA						
		RA(C)						
		RA(O)						
		LTM						

LONGHORN ARMY AMMUNITION PLANT IRP Schedule

SITE ID	SITE NAME	PHASE	FY10	FY11	FY12	FY13	FY14	FY15+
LHAAP-024	FORMER UNLINED EVAP POND (SWMU 24)	PA						
		SI						
		RI/FS						
		RD						
		IRA						
		RA(C)						
		RA(O)						
		LTM						
SITE ID	SITE NAME	PHASE	FY10	FY11	FY12	FY13	FY14	FY15+
LHAAP-029	FORMER TNT PRODUCTION AREA(SWMU 29)	PA						
		SI						
		RI/FS						
		RD						
		RA(C)						
		RA(O)						
SITE ID	SITE NAME	PHASE	FY10	FY11	FY12	FY13	FY14	FY15+
LHAAP-050	FORMER WASTE DISPOSAL FACILITY	PA						
		SI						
		RI/FS						
		RD						
		RA(C)						
		RA(O)						
SITE ID	SITE NAME	PHASE	FY10	FY11	FY12	FY13	FY14	FY15+
LHAAP-067	ABOVE GROUND STORAGE TANK	PA						
		SI						
		RI/FS						
		RA(C)						
		RA(O)						
SITE ID	SITE NAME	PHASE	FY10	FY11	FY12	FY13	FY14	FY15+
PBC Longhorn	PBC at Longhorn	PA						
		RD						
		RA(C)						
		RA(O)						

LONGHORN ARMY AMMUNITION PLANT

Non-BRAC Excess
Military Munitions Response Program

MMRP Summary

Installation Total Army Environmental Database-Restoration (AEDB-R) Sites/Response Complete (RC) Sites: 3/1

Installation Site Types with Future and/or Underway Phases

1 Explosive Ordnance Disposal Area
(LHAAP-003-R-01)

1 Unexploded Munitions/Ordnance
(LHAAP-001-R-01)

Most Widespread Contaminants of Concern

Explosives

Media of Concern

Groundwater, Soil

Completed Remedial Actions (Interim Remedial Actions / Final Remedial Actions (IRA/FRA))

Site ID	Site Name	Action	Remedy	FY	Cost
LHAAP-001-R-01	SOUTH TEST AREA / BOMB TEST AREA	IRA	INSTITUTIONAL CONTROLS	2009	TBD
LHAAP-001-R-01	SOUTH TEST AREA / BOMB TEST AREA	IRA	UXO CLEARANCE	2009	TBD

Duration of MMRP

Year of MMRP Inception: 200202

Estimated Date for Remedy-In-Place (RIP)/Response Complete (RC): 200912/200912

Date of MMRP completion including Long Term Management (LTM): 203912

MMRP Contamination Assessment

Contamination Assessment Overview

In May 2003 the Phase 3 Army range inventory was completed at LHAAP. The inventory identified three sites as eligible for the Military Munitions Response Program (MMRP). The Phase 3 inventory serves as the preliminary assessment (PA) under CERCLA. In June 2005 an SI was completed. An EE/CA was finalized on the three sites in October 2007. The EE/CA indicated that "No Department of Defense (DoD) Action" was required for LHAAP-002-R-01. An interim removal action was funded for the two other sites and was completed in 2009. In March 2008 an explosives safety submission (ESS) was finalized for the three sites.

Cleanup Exit Strategy

Five-year reviews are planned for both sites. These five-year reviews will ensure that the site is inspected, LUCs are still in place and that any new data regarding the condition of the site is reviewed.

MMRP Previous Studies

	Title	Author	Date
2001			
	U.S. Army Active/Inactive Range Inventory, Longhorn AAP	Army Materiel Command	AUG-2001
2002			
	CTT Range Inventory		JAN-2002
2003			
	Phase 3 Army Range Inventory at Longhorn Army Ammunition Plant	e2M	MAY-2003
2005			
	Final Site Inspection Report, Military Munitions Response Program Site Inspection, Munitions Response Sites	e2M	JUN-2005
2006			
	Final Work Plan Engineering Evaluation/Cost Analysis at the Longhorn Army Ammunition Plant	CAPE	MAR-2006
	Draft Operational Range Inventory Sustainment (ORIS) for Longhorn AAP	US Army	NOV-2006
2007			
	Final Engineering Evaluation/Cost Analysis at the Longhorn Army Ammunition Plant	CAPE	OCT-2007
2008			
	Final Explosives Safety Submission - Munitions and Explosives of Concern Removal Action	USACE, Huntsville	FEB-2008
	Final Work Plan for MEC Removal Action at Former LHAAP LHAAP-001-R(Site 27) and LHAAP-003-R(Site 54)	EOD Technology, Inc.	JUL-2008

LONGHORN ARMY AMMUNITION PLANT

Non-BRAC Excess

Military Munitions Response Program
Site Descriptions

Site ID: LHAAP-001-R-01
Site Name: SOUTH TEST AREA / BOMB TEST AREA

STATUS

Parcel: South Test/Bomb (FWS) (72 acres)

Regulatory Driver: CERCLA
MRSPP Score: 04

Contaminants of Concern: Explosives

Media of Concern: Groundwater, Soil

Phases	Start	End
PA	200202	200305
SI	200402	200506
RI/FS	200503	200912
IRA	200710	200904
LTM	200912	203912

RIP Date: N/A

RC Date: 200912

SITE DESCRIPTION

This site, also known as environmental site LHAAP-027, is approximately 79 acres located southeast of Avenue P and the magazine area, at the end of 70th street, near the southern boundary of LHAAP. The site was constructed in 1954 and used by Universal Match Corporation to test photoflash bombs that were produced at the facility until about 1956. The bombs were tested by exploding them in the air over an elevated, semi-elliptical earthen test pad. Bombs awaiting testing were apparently stored in three earth-covered concrete bunkers. The bombs tested were 150-pound M120/M120A photoflash bombs, filled with photoflash powder and containing a black powder booster charge for bursting the bomb with a timed nose fuse.

The location of the site, for this purpose, was not ideally suited to the task, as fragments from this testing landed beyond the installation boundary. By June 1954, static testing of photoflash bombs had been discontinued because of the possibility of damage and injuries beyond the installation boundary. During the late 1950s, illuminating signal devices were also demilitarized within pits at this site. During the early 1960s, leaking production items were demilitarized in the area. The May 1997 Final RI Report, for Group I Sites, indicates approximately 52,000 one-half and one pound photoflash cartridges were demilitarized at the site in the early 1980s.

In 1982 investigations included installation and sampling of two wells and three shallow soil samples. Explosives, metals, chloride and sulfate were detected above background levels in the soil samples. In January 1998, a NFA ROD was signed by the USEPA, based upon the site-specific risk analysis for human and ecological exposure to the contaminants of potential concern for the site.

In 2004 the explosive ordnance division (EOD) at Fort Polk blew in place (BIP) one 155 mm white phosphorous (WP) round. The identification of this round as a live 155mm WP round is suspect. Plexus, in the 2005 Environmental Baseline Study (EBS) (page 46), states that "Confirmatory Sampling (CS) WP operations at LHAAP were assembly and packout operations only; no loading of these materials was conducted at the site. The WP rounds were stored and worked in the east line area of Plant 2 (US Army Toxic and Hazardous Materials Agency (USATHAMA), 1980)." Testing of the payload at LHAAP would not be part of the mission, since it was not manufactured at Longhorn. Others indicate that it was a 105 or 81 mm smoke round.

A reported demolition site was identified on the NW perimeter of this site. This was added to the investigation. In FY08 an EE/CA Report was completed, approved and signed. In October 2007 the report was finalized. An IRA has been funded with the Final ESS completed in March 2008. The removal action was completed in 2009. Five-year reviews will be required following the removal action.

Site ID: LHAAP-001-R-01
Site Name: SOUTH TEST AREA / BOMB TEST AREA

CLEANUP/EXIT STRATEGY

Five-year reviews are planned for this site. These five-year reviews will ensure that the site is inspected, LUCs are still in place and that any new data regarding the condition of the site is reviewed.

Site ID: LHAAP-003-R-01
Site Name: GROUND SIGNAL TEST AREA

STATUS

Parcel: Ground Signal Test (FWS) (80 acres)

Regulatory Driver: CERCLA
MRSPP Score: 04

Contaminants of Concern: Explosives

Media of Concern: Groundwater, Soil

Phases	Start	End
PA	200202	200305
SI	200402	200506
RI/FS	200503	200912
IRA	200710	200904
LTM	200912	203912

RIP Date: N/A

RC Date: 200912

SITE DESCRIPTION

xThis site, also known as environmental site LHAAP-054, encompasses approximately 80 acres and is located in the southeastern portion of LHAAP. Starting in April 1963 the site was used intermittently for aerial and on-ground testing and destruction of a variety of devices, including red phosphorus smoke wedges, infrared flares, illuminating 60 and 81mm mortar shells, illuminating 40 to 155mm cartridges, button bombs, and various types of explosive simulators. The site was also used intermittently over a 20-year period for testing and burnout of rocket motors from Nike-Hercules, Pershing, and Sergeant missiles. Around 1970, one of the Sergeant rocket motors exploded in an excavated pit near the center of the site. Debris was reportedly placed in the resulting crater and backfilled. From late 1988 through 1991, the site was also used for burnout of rocket motors in Pershing missiles destroyed in accordance with the INF Treaty between the US and the former Soviet Union. In January 1998 an NFA ROD for Hazardous, Toxic and Radioactive Waste (HTRW) under CERCLA was signed. The site is currently undeveloped.

In December 2004, the EOD unit at Fort Polk BIP blew up 105mm and 81mm rounds in place. In FY08 an EE/CA report was completed, approved and signed. In October 2007 the report was finalized. An IRA has been funded with the final ESS completed in March 2008. The removal action was completed in 2009. Five-year reviews will be required following the removal action.

CLEANUP/EXIT STRATEGY

Five-year reviews are planned for this site. These five-year reviews will ensure that the site is inspected, LUCs are still in place and that any new data regarding the condition of the site is reviewed.

MMRP No Further Action Sites Summary

Site ID	Site Name	NFA Date	Documentation
LHAAP-002-R-01	STATIC TEST AREA	200811	

MMRP Schedule

Date of MMRP Inception: 200202

Past Phase Completion Milestones

2003	
PA	(LHAAP-001-R-01 - SOUTH TEST AREA / BOMB TEST AREA, LHAAP-002-R-01 - STATIC TEST AREA, LHAAP-003-R-01 - GROUND SIGNAL TEST AREA)
2005	
SI	(LHAAP-001-R-01 - SOUTH TEST AREA / BOMB TEST AREA, LHAAP-002-R-01 - STATIC TEST AREA, LHAAP-003-R-01 - GROUND SIGNAL TEST AREA)
2008	
RI/FS	(LHAAP-002-R-01 - STATIC TEST AREA)

Projected Phase Completion Milestones

See attached schedule

Projected Record of Decision (ROD)/Decision Document (DD) Approval Dates

To Be Determined

Final RA(C) Completion Date:

NPL Deletion Date: N/A

Schedule for Next Five-Year Review: N/A

Estimated Completion Date of MMRP at Installation (including LTM phase): 203912

LONGHORN ARMY AMMUNITION PLANT MMRP Schedule

= phase underway

SITE ID	SITE NAME	PHASE	FY10	FY11	FY12	FY13	FY14	FY15+
LHAAP-001-R-0	SOUTH TEST AREA / BOMB TEST AREA	PA						
		SI						
		RI/FS						
		IRA						
		LTM						
SITE ID	SITE NAME	PHASE	FY10	FY11	FY12	FY13	FY14	FY15+
LHAAP-003-R-0	GROUND SIGNAL TEST AREA	PA						
		SI						
		RI/FS						
		IRA						
		LTM						

Community Involvement

Technical Review Committee (TRC): 199203

Restoration Advisory Board (RAB): RAB established 2004

RAB Adjournment Date:
RAB Adjournment Reason:

Community Involvement Plan (Date Published): 200309

Additional Community Involvement Information

While the Army leads the Installation Restoration Program (IRP) at LHAAP, a close working relationship with the regulatory community has been developed. The local public community has been involved in the past through the TRC process.

In April 1996 and in 1998 formation of a RAB was attempted; however, community involvement in the TRC process was determined to be sufficient for community needs. In September 2004, in response to public notices and private mailings, a group of citizens attended a RAB-interest meeting. Enthusiastic support resulted in the first RAB meeting in December 2004. It was well attended. The RAB has created its own symbol, finalized its charter, and elected a co-chair. The RAB meets quarterly and public meetings are held for each PP. These will continue as needed.

Administrative Record is located at

Longhorn Army Trailer
Groundwater Treatment Plant Compound
Highway 134 and Spur 449
Karnack, TX 75661

Marshall Texas Library
300 South Alamo
Marshall, TX 75670

Information Repository is located at

Longhorn Army Trailer
Groundwater Treatment Plant Compound
Highway 134 and Spur 449
Karnack, TX 75661

Current Technical Assistance for Public Participation (TAPP): 199909
TAPP Title: Grnd/surf water migration
Current Technical Assistance for Public Participation (TAPP): 200103
TAPP Title: TAPP2

Potential TAPP: N/A

Appendix A

LHAAP Environmental Site Status

Site ID (DSERTS)	RMIS No.	DERPMIS No.	Site Description	Current Status	Phase Completion Dates
LHAAP-001*	1	1	Inert Burning Ground (7.7 acres)	RC	NA ROD 23 Jan 1998
LHAAP-002	2	2	Vacuum Truck Overnight Parking Lot (0.9 acres)	SI	RC September 2009
LHAAP-003	3	3	Building 722 - Paint Shop (0.04 acres)	SI	RC September 2009
LHAAP-004**	4	4	Pilot Waste Water Treatment Plant (0.4 acres)	ROD/DD	RD Sep2009; RA(C) Dec2009; RIP Jun2010; RC Sep2015
LHAAP-005	5	5	Power House Boiler Pond (5.8 acres)	RC	RCRA Closure Jul 2002
LHAAP-006	6	6	Building 54F Solvent (0.003 acres)	RC	SI Dec 2007; DD Dec2008; RC Dec2008
LHAAP-007	7	7	Building 50G Drum Processing (0.07 acres)	RC	SI Dec 2007; DD Dec2008; RC Dec2008
LHAAP-008	8	8	| Sewage Treatment Plant (2.7 acres)	RC	RI/FS NA DD Dec2008; RC Dec2008
LHAAP-009	9	9	Building 31-W Drum Storage (0.2 acres)	RC	RCRA Closure (Permitted) Nov
LHAAP-011*	11	10	Suspected TNT Burial Site at P&Q Avenue (2 acres)	RC	NA ROD 23 Jan 1998
LHAAP-012*	12	11	Active Landfill (9.3 acres)	LTM (OPS)	RIP Oct 2007; RA(O)/RC Sep 2039
LHAAP-013*	13	12	Suspected TNT Burial Site Between Active and Old Landfill (0.5 acres)	RC	NA ROD 14 Feb 1996
LHAAP-014*	14	13	Area 54W Burial Site (0.5 acres)	RC	NA ROD 14 Feb 1996
LHAAP-015	15	14	Area 49-W Drum Storage (0.7 acres)	RC	RCRA Closure (Permitted) Oct 1999
LHAAP-016*	16	15	Old Landfill (26 acres)	RI/FS	RA(C) Jan2010; RA(O) Sep2015; LTM Sep2039; RIP Jan2010; RC Sep2015
LHAAP-017*	17	16	No. 2 Flashing Area Burning Ground (10 acres)	RI/FS	RI/FS Dec2009; RD Apr2010; RA(C) May2010; RA(O) Sep2015; LTM Sep2039; RIP Jul2010; RC Sep2015
LHAAP-018*	18	17	Burning Ground/Rocket Motor Washout Pond (81 acres)	RI/FS	RI/FS Feb2010; RD Apr2010; RA(C) May2010; RA(O) Sep2015; LTM Sep2039; RIP Jul2010; RC Sep2015
LHAAP-018	18	38	24X Holding Area		See LHAAP-018
LHAAP-018	18	39	25X Washout Pad		See LHAAP-018
LHAAP-018	18	40	Air Curtain Destructor		See LHAAP-018

Site ID (DSERTS)	RMIS No.	DERPMIS No.	Site Description	Current Status	Phase Completion Dates
LHAAP-049**	29	49	Former Acid Plant (26 acres)	RI/FS	RI/FS Jul2009; RIP Jul2009; RC Jul2009
LHAAP-050**	50	50	Former Waste Disposal Facility (9 acres)	RI/FS	RI/FS Dec2009; RD Mar2010; RA(C) Apr2010; RA(O) Sep2015; RIP Jun2010; RC Sep2015
LHAAP-051	51	51	Photographic Laboratory/Building 60-B (0.1 acres)	RC	SI NA DD Dec2008; RC Oct2008
LHAAP-052	52	52	Magazine Washout Area (0.1 acres)	RC	NA PA May1998
LHAAP-053	53	53	Static Test Area (29 acres)	RIFS IRP and MMRP	RI/FS NA DD Sep2008
LHAAP-054*	54	54	Ground Signal Test Area (75 acres)	Ground Signal Test Area (75 acres)	NA ROD 23 Jan 1998/Removal Action underway under MMRP
LHAAP-055	55	55	Septic Tanks (Scattered Locations)	RC	SI NA DD Dec2008; RC Dec2008
LHAAP-056	56	56	Vehicle Wash Rack and Oil/Water Separator		
LHAAP-057	57	57	Rubble Burial Site (0.3 acres)	RC	
LHAAP-058**	58	58	Maintenance Complex (15 acres)	RI/FS	RI/FS Mar2009; RD Jan2010; RA(C) Feb2010; RA(O) Sep2015; RIP Jul2010
LHAAP-059	59	59	Storage Building 725 (0.03 acres)	SI	SI NA DD Sep2008
LHAAP-060	60	60	Storage Building No. 411 and No. 714 (0.4 acres)	RC	SI NA DD Dec2008; RC Dec2008
LHAAP-061	61	61	| Potable Water Treatment Sediment Ponds (1.3 acres)	RC	NA PA 1996 (DERPMIS)
LHAAP-063	63	63	Burial Pits (2.3 acres)	RC	PA May 1998 (Group 5)
LHAAP-064	64	64	Transformer Storage Area (0.02 acres)	RC	SI NA DD Dec2008; RC Dec2008
LHAAP-065 TBD	65	65	65 | Building No. 209 (0.2 acres)	SI	SI TBD
LHAAP-066	66	66	Transformer at Building 401 (0.1 acres)	RC	SI NA DD Dec2008; RC Dec2008
LHAAP-067**	67	67	Above Ground Storage Tank (2 acres)	ROD/DD	RI/FS Sep2008; DD Apr2009; RA(C) Sep 2008; RA(O) Sep2039; RIP Oct 2008; RC Sep2039
LHAAP-068	68	68	Building 51-F (0.01 acres)	RC	SI NA DD Dec2008; RC Dec2008
LHAAP-069	69	69	Underground Storage Tank (0.02 acres)	RC	Closure in accordance with RCRA

Site ID (DSERTS)	RMIS No.	DERPMIS No.	Site Description	Current Status	Phase Completion Dates
LHAAP-070			Dock Magazine Area (0.1 approx acres)	RC	NA SI Sep95; USEPA concurrence 18 Aug 2004
Pistol Range**	Pistol Range (0.4 acres)		Pistol Range (0.4 acres)	ROD/DD	RD Sep2009; RA(C) Dec2009; RIP Jun2010; RC Sep2015
LHAAP-001-R-01**			South Test Area/Bomb Test Area (72 approx acres)	RI/FS	RI/FS Sep2009; LTM Sep2039; RC Sep2015
LHAAP-002-R-01			Static Test Area (27 approx acres)	RC	NFA; RC Oct2007
LHAAP-003-R-01			Ground Signal Test Area (80 approx acres)	RI/FS	RI/FS Sep2009; LTM Sep2039; RC Sep2015

* Site was identified in Federal Facility Agreement.
** Site was determined to be NPL caliber.

TBD NPL/non-NPL status is under discussion.

LONGHORN ARMY AMMUNITION PLANT,

Karnack, Texas

MONTHLY MANAGERS' MEETING

AGENDA

DATE:	Tuesday, 01 December 2009
TIME:	2:00 p.m.
PLACE:	Longhorn Army Ammunition Plant
	Call-In Number 866-797-9304, Passcode 4155734

Welcome **RMZ**

Action Items:

Army
- Provide 2009 IAP public website and hardcopies to the library.

EPA Groundwater Sampling **ST**
- LHAAP-18/24
- MMRP Sites

Defense Environmental Restoration Program (DERP) PBC Update **PS/GJ**
- Document Status/Environmental Sites (Table)
- Groundwater Treatment Plant

DERP Total Environmental Restoration Contract Update
- LHAAP-37/67 – Draft Final ROD Status **RMZ**

BRAC-Funded Environmental Restoration
- LHAAP-19 – Demolition Landfill Progress **JRL/AW**

MMRP **JRL/AW**
Update

Other Issues **RMZ**
- 2009 IAP Download at: https://aero.apgea.army.mil/pIAP/frmInstallations.jsp
- LHAAP-18/24 ESD

Adjourn

Shaw Environmental, Inc.

Subject:	**Draft Final Minutes, Monthly Managers Meeting, Longhorn Army Ammunition Plant (LHAAP)**
Location of Meeting:	**LHAAP Army Trailer**
Date of Meeting:	**December 1, 2009; 2:00 PM – 4:30 PM**

Meeting Participants:

BRAC:	Rose M. Zeiler
USAEC:	Matthew Mechenes
USACE-Tulsa:	Aaron Williams, John Lambert
Shaw:	Greg Jones, Kay Everett
USEPA Region 6:	Steve Tzhone
TCEQ:	Fay Duke
USFWS:	Paul Bruckwicki
USGS:	Kent Becher
USEPA:	Rich Mayer (telephone)

Previous Action Items

Army

- Provide 2009 IAP hardcopy to the library. *(In progress)*

EPA Groundwater Sampling

MMRP Sites

Rich Mayer, with USEPA, provided an update of the groundwater sampling activities at the MRRP sites. Booz Allen Hamilton was contracted by EPA to conduct sampling at the sites. Rich indicated that he had received preliminary results the previous evening, so the data has not been thoroughly evaluated. He said that there were hits of chromium and nickel in some of the wells

sampled. He also said that some explosives were detected, but none were above regulated levels. The highest concentration of perchlorate observed with EPA results, 76 µg/L, was collected from monitoring well 27WW03. Army's split sample result for the groundwater sample collected at monitoring well 27WW03 was the highest perchlorate concentration at 50 µg/L, for the Army split sample results. There were metals detected in 18WW01 near LHAAP-19. Rich indicated that low flow sampling could not be utilized at some locations, and well bailing was necessary. Steve Tzhone said that they would forward the results when they become available. Steve indicated that there were high metals results, and a discussion ensued about whether sampling results were total or dissolved and if stainless steel casings were a factor. John Lambert said that the Army will forward their split sampling results when they become available. John indicated that sampling methods and historical data would be reviewed in relation to the newer data and that the Army would look at the methods for compliance with quality assurance/ quality control procedures.

Steve said that the monitoring performed at the MMRP sites was intended to provide data to finish the MEC report and proposed plan. Steve suggested that these results be discussed with Army later in December or early January. Army agreed, and a tentative date of December 11th was chosen later in the meeting.

LHAAP-18/24

The USGS was contracted by the EPA to conduct additional groundwater sampling at LHAAP-18/24. Kent Becher provided a summary of those sampling activities. Some of the wells on the original sampling list had not been sampled for a long time, and turbidity was an issue. Kent indicated that the sampling team had to deviate from low flow sampling protocols at some wells due to very low recharge rates. Such deviations were noted in the field notes and sampling forms. Kent reiterated that their objective was to conduct monitoring in contaminated wells and in areas where monitoring was not currently being conducted. EPA targeted 49 wells for sampling but actually sampled 44 wells. Kent said a proper USGS report with peer review would be provided in a few months, but that the data would be made available by February 2010. It was discussed that if results are to be used for the current feasibility studies the data would have to be provided within a specific window to meet the current schedule. It was also noted that the results would be considered in the feasibility study only if they appeared to impact the selection of the remedy.

Kent indicated that his crew found a broken water line and observed an old barrel near a well on the north end of the sampling area.

Kent expressed USGS's thanks to Shaw's treatment plant personnel and to USFWS personnel for providing information and assistance when needed.

<u>Defense Environmental Restoration Program (DERP) PBC Update</u> **Greg Jones**

Document Status/Environmental Sites (Table)

Greg Jones briefly went over the document status/environmental sites table.

- LHAAP-02: The Draft Final Decision Document for LHAAP-02 is in comment resolution with the Army. The draft work plan for soil removal at LHAAP-03 is in preparation.

- LHAAP-04: The Draft Completion Report for LHAAP-04 is in preparation.
- LHAAP-06, -07, -51, -55, -64, -66, and -68: The survey data with accompanying affidavits for LHAAP-06, LHAAP-07, LHAAP-51, LHAAP-55, LHAAP-64, LHAAP-66, and LHAAP-68 were provided to the Army. The survey data and affidavits will be used to file county notifications.
- LHAAP-16: The response to comments (RTCs) for the Draft Final Feasibility Study Addendum, Rev 01 for LHAAP-16 is in regulatory review. A discussion ensued on how to present new data that have been collected. It was agreed that Shaw would provide a track-changed document before producing the document.
- LHAAP-17: The RTCs for the Draft Final Feasibility Study for LHAAP-17 is also in regulatory review.
- LHAAP-18/24: Army comments have been received for the Draft Feasibility Study for LHAAP-18/24 and resolution is in progress.
- LHAAP-29: Revised RTCs for the Draft Final Feasibility Study for LHAAP-29 are being prepared for submittal to regulators.
- LHAAP-46: The Final Focused Feasibility Study for LHAAP-46 was submitted November 30, 2009. The Draft Final Proposed Plan for LHAAP-46 is in progress.
- LHAAP-47: The Draft Final Focused Feasibility Study for LHAAP-47 is in progress. A new round of groundwater sampling was conducted; revised RTCs were submitted on September 24, 2009.
- LHAAP-49: Comment resolution for the Draft Final Proposed Plan for LHAAP-49 is complete and awaiting TCEQ response. The Draft ROD for LHAAP-49 is in Army review.
- LHAAP-50: The Draft Final Feasibility Study for LHAAP-50 is in progress and awaiting EPA comments. The RTCs for Draft Final Proposed Plan for LHAAP-50 is in progress; Army's review is complete.
- LHAAP-58: The RTCs for Draft Final Feasibility Study for LHAAP-58 is in regulatory review with EPA comments pending. The comment resolution is in progress for the Draft Proposed Plan for LHAAP-58.
- LHAAP-60: The survey data along with the affidavit for LHAAP-60 was provided to the Army to be used to file the county notification.
- LHAAP-35/36: The RTCs for the Draft Final Decision Document for LHAAP-35/36 is in progress. The Draft Final Completion Report for the Pistol Range is in regulatory review.
- Pistol Range: The RTCs for the Draft Final Proposed Plan for the Pistol Range is in preparation.

Groundwater Treatment Plant Update

The treatment plant operated normally during the past month. The metals and volatile organics removal ran at 180 to 200 gallons per minute. Normal operation is three days a week. The FBR is normally operated 24 hours per day at 12 to 18 gallons per minute. There have been no exceedances reported.

Steve asked about the investigation derived waste (IDW) generated during the EPA sampling effort. Much of the waste was containerized and held for analytical tests to determine appropriate

disposal. Steve said the data would be provided to Shaw for their review before disposing the water at the treatment plan.

DERP Total Environmental Restoration Contract (TERC) Update **Rose Zeiler**

LHAAP-37/67 – Draft Final ROD Status
The ROD for LHAAP-37/67 has been submitted to EPA. Steve instructed the Army to send a hardcopy. It was reiterated that a hardcopy, signed by Army, is sent after both TCEQ and EPA concurrence are received. The ROD will have to be co-signed by the Army and the EPA.

BRAC-Funded Environmental Restoration

LHAAP-19—Demolition Landfill Progress **Aaron Williams**
Landfill activities have been completed. The cover has been reseeded with native grasses. It was discussed that Dale Vodak with the TCEQ Tyler office will inspect the landfill and provide verification on the cover.

Fay Duke also mentioned that the landfills that had been recently mown (LHAAP-12 and LHAAP-16) looked good.

MMRP **John Lambert**

Update
When TCEQ concurs with the draft metes and bounds description and survey, for the two MMRP sites, the MEC Removal Action Report will be finalized. There are restrictions for digging within the boundaries of these areas and signage is in place. A discussion regarding these restrictions and boundaries ensued. There was also discussion regarding the MC (munitions constituents) data summary. The Army plans to send a retraction letter for the Proposed Plan for the two MMRP sites to allow for finalization of the MC Data Summary Report and consideration of pending data from the recent EPA groundwater sampling.

Other Issues

Rose indicated that Aaron is preparing responses to ELD comments on the LHAAP-18/24 ESD, and that these responses will be provided to ELD for concurrence.

Paul Bruckwicki provided a map showing where pallets of railroad ties remain at the LHAAP.

Steve mentioned a study of green remediation projects. Steve noted Rose's concern that if this study involved remaining Army land at Longhorn, most specifically the groundwater treatment

plant, it could cause an undesirable impact on the feasibility study and the selection of the remedy from Army's perspective. Rose stated that Army BRAC's decision is that Longhorn will not participate in the study.

The next monthly manager's meeting will be held January 26, 2009 at 2 PM at Longhorn.

Meeting Adjourned

Action Items
EPA – Provide analytical results on IDW from recent groundwater sampling.

Shaw Environmental, Inc.

Status of Sites and Technical Documents
Longhorn Army Ammunition Plant – PBC Contract
December 1, 2009

No.	Document in Progress	Submittal Date	Army	Regulator	Next Submittal	Expected Date	Army	Regulator	Comment Resolution	Status	Remarks
1	Draft Rev 01Decision Document, LHAAP-02	10/01/09	x		Draft Final	12/15/09	x	x		In comment resolution after Army's review	DD calls for limited groundwater monitoring
2	Draft Soil Removal Work Plan, LHAAP-03	12/30/09	x							In preparation	
3	Draft Completion Report, LHAAP-04	12/15/09	x							In preparation	
4	County Notification LHAAP-06, 07, 51, 55, 64, 66, 68	11/30/09	x							Draft for LHAAP-06 submitted for Army review. Others in preparation.	One survey remaining.
5	Draft Final Feasibility Study Addendum, Rev 01, LHAAP-16	7/3/08		x	Final	12/15/09	x	x	In progress	RTCs in regulatory review	
6	Draft Final Feasibility Study, LHAAP-17	4/14/09	x	x	Final	12/15/09	x	x	In progress	RTCs in regulatory review	
7	Draft Feasibility Study, LHAAP-18/24	3/3/09	x		Draft Final	01/31/09	x	x	In progress	Army comments received. Resolution in progress. Revised RTCs in Army's review as of 7/26/09	
8	Draft Final Feasibility Study, LHAAP-29	03/11/09	x	x	RTC	12/16/09	x	x	In progress	Revised RTCs reviewed by Army. Preparing RTCs for submittal to regulators	

Shaw Environmental, Inc.

Status of Sites and Technical Documents
Longhorn Army Ammunition Plant – PBC Contract
December 1, 2009

No.	Document in Progress	Submittal Date	Army	Regulator	Next Submittal	Expected Date	Army	Regulator	Comment Resolution	Status	Remarks
9	Final Focused Feasibility Study, LHAAP-46	10/30/09	x	x					Resolution complete	Final FS submitted	
10	Draft Proposed Plan, LHAAP-46	9/29/09	x		Draft Final	12/15/09	x	x	In progress	Army comments received.	
11	Draft Focused Feasibility Study, LHAAP-47	12/23/08	x		Draft Final	1/30/10	x	x	In progress	Army comments received. Conducted a new round of groundwater sampling. Submitted revised RTCs on 9/24/09	
12	Draft Final Proposed Plan, LHAAP-49	9/14/09	x	x	Final	12/15/09			Complete	Regulatory review complete. TCEQ response awaited.	
13	Draft ROD, LHAAP-49	10/20/09	x		Draft Final	12/22/09	x	x		In Army review	
14	Draft Final Feasibility Study, LHAAP-50	11/20/08	x	x	Final	12/15/09	x	x	In progress	RTCs in regulatory review. TCEQ comments received. EPA comments pending.	
15	Draft Proposed Plan, LHAAP-50	10/16/09	x		Draft Final	12/15/09	x	x	In progress	Army's review complete. RTCs in preparation	
16	Draft Final Feasibility Study, LHAAP-58	9/20/07	x	x	Final	11/30/09	x	x	In progress	RTCs in regulatory review. EPA comments pending.	
17	Draft Proposed Plan, LHAAP-58	10/08/09	x		Draft Final	11/20/09	x	x	In progress	Comment resolution in progress.	
18	County Notification, LHAAP-60	Nov 2009							In preparation		

Shaw Environmental, Inc.

Status of Sites and Technical Documents
Longhorn Army Ammunition Plant – PBC Contract
December 1, 2009

No.	Document in Progress	Submittal Date	Army	Regulator	Next Submittal	Expected Date	Army	Regulator	Comment Resolution	Status	Remarks
19	Draft Final Decision Document, LHAAP-35/36	7/15/09	x	x	Final	12/15/09	x	x	Resolved	TCEQ comment received on DF DD. Resolution in progress.	
20	Draft Final Completion Report, Pistol Range	10/7/09	x		Draft Final	11/12/09	x	x	Comments resolved	Draft Final in regulatory review	
21	Draft Proposed Plan, Pistol Range	10/7/09	x		Draft Final	12/15/09	x	x		Army review complete. RTCs in preparation	

Shaw

LONGHORN ARMY AMMUNITION PLANT
MONTHLY MANAGERS' MEETING

Location	Longhorn Army Ammunition Plant - Marshall, Texas		
Date	1-Dec-2009	**Time**	2:00 PM

ATTENDEES

Name (printed)	Signature	Organization	Phone	E-mail
Longhorn Team Members				
Rose M. Zeiler		BRAC	(479) 635-0110	rose.zeiler@us.army.mil
Matthew Mechenes		USAEC	(410) 436-1505	matthew.mechenes@us.army.mil
Aaron Williams		USACE, Tulsa	(918) 669-4915	aaron.k.williams@usace.army.mil
John Lambert		USACE, Tulsa	(918) 669-4992	john.r.lambert@SWT03.usace.army.mil
Scottie Fiehler		USACE, Tulsa	(918) 669-7232	scottie.fiehler@us.army.mil
Stephen Tzhone		USEPA, Dallas	(214) 665-8409	tzhone.stephen@epa.gov
Raji Josiam		USEPA, Dallas	(214) 665-8529	josiam.raji@epa.gov
Fay Duke		TCEQ, Austin	(512) 239-2443	fduke@tceq.state.tx.us
Dale Vodak		TCEQ, Tyler	(903) 535-5142	dvodak@tceq.state.tx.us
Barry Forsythe		USFSW, Dallas	(214) 665-8467	forsythe.barry@epa.gov
Paul Bruckwicki		USFSW, Karnack	(903) 679-4536	paul_bruckwicki@fws.gov
Mark Williams		USFSW, Karnack	(903) 679-9144	mark_williams@fws.gov
Praveen Srivastav		SHAW, Houston	(713) 996-4588	praveen.srivastav@shawgrp.com
Kay Everett		SHAW, Houston	(713) 996-4421	kay.everett@shawgrp.com
Greg Jones		SHAW, Houston	(713) 996-4472	greg.n.jones@shawgrp.com
Van Vangala		SHAW, Houston	(713) 996-4459	van.vangala@shawgrp.com
Kent Becher	Kent Becher	USGS, Fort Worth	(817) 263-9545	~~Kentbecher@usgs.gov~~ kdbecher@usgs.gov
Rich Meyer	telephone			

LONGHORN ARMY AMMUNITION PLANT
RESTORATION ADVISORY BOARD
Karnack, Texas
(479) 635-0110

November 17, 2009

Distribution (one copy each)

Paul Fortune
Post Office Box 16
Karnack, Texas 75661

Robert Speight, Jr.
2757 Blairs Landing Road
Karnack, Texas 75661

Tom Walker
500 Private Rd 7222
Jefferson, Texas 75657

Judith Johnson
1635 Dorough Road
Karnack, Texas 75661

Larry McCathran
3024 Marshall-Leigh Road
Marshall, Texas 75672

Nigel R. Shivers
Post Office Box 558
Karnack, Texas 75661

Ken Shaw
1517 Dorough Road
Karnack, Texas 75661

Dear LHAAP RAB Member,

The next Restoration Advisory Board (RAB) meeting will be held on Tuesday, December 1, 2009, from 6:30 to 7:30 p.m. at the Karnack Community Center, Highway 134 and Spur 449, Karnack, Texas 75661. We hope that you can attend this meeting. If you have any questions, please do not hesitate to contact me.

Shaw Environmental, Inc. (Shaw) is the contractor supporting the U.S. Army environmental restoration activities at the Longhorn Army Ammunition Plant (LHAAP), and will be coordinating the RAB meeting. A tentative agenda is attached.

Regards,

Dr. Rose Zeiler
Department of the Army
Longhorn Army Ammunition Plant
Box 220
Ratcliff, Arkansas 72951

LONGHORN ARMY AMMUNITION PLANT
RESTORATION ADVISORY BOARD
Karnack, Texas
(479) 635-0110

AGENDA

DATE:	Tuesday, December 1, 2009
TIME:	6:30 – 7:30 PM
PLACE:	Karnack Community Center, Karnack, Texas

06:30 Welcome {RMZ & PF}

06:35 Open items {RMZ}

06:40 Programmatic Issues
- Site Status Summary
- Other

06:50 Defense Environmental Restoration Program (DERP) Performance Based Contract (PBC) Update {Shaw}
- Groundwater Treatment Plant (GWTP) Update
- Documents Status/ Environmental Sites

07:05 DERP Total Environmental Restoration Contract Update {RMZ}
- ROD for LHAAP-37 and-67

07:10 Military Munitions Response Program (MMRP) Update {USACE}

07:15 Other Environmental Restoration Issues/Concerns {RMZ)
- Construction Debris Landfill

07:20 Transfer Update
- Powerhouse Demolition {USACE}
- Transfer status of Site 12
- ECOP VI

07:30 Adjourn {RMZ}

Shaw Environmental, Inc.

Subject:	**Draft Final Minutes, Quarterly Restoration Advisory Board (RAB) Meeting, Longhorn Army Ammunition Plant (LHAAP)**
Location of Meeting:	**Karnack Community Center, Karnack, Texas**
Date of Meeting:	**December 1, 2009, 6:30 – 07:30 PM**

Meeting Participants:

LHAAP/BRAC	Rose M. Zeiler
USACE-Tulsa:	John Lambert, Aaron Williams, Matt Mechenes
Shaw Environmental:	Greg Jones, Kay Everett, Van Vangala
TCEQ:	Fay Duke
USEPA Region 6:	Steve Tzhone
USGS:	Kent Becher
RAB:	Paul Fortune, Nigel Shivers, Tom Walker
Community:	Nancy Ray, Eddie Ray, Jason Roesner, Rick Lowerre

An agenda for the RAB meeting was distributed prior to the meeting.

Welcome – Rose Zeiler and Paul Fortune
Paul Fortune called the meeting to order. It was recognized that Tony Novak, a founding RAB member, had passed away recently. His service to the RAB was remembered and appreciated.

Open Items – Rose Zeiler
Schedule was set for the public tour of the Longhorn plant to coincide with the public meeting on January 26, 2010. The time for the tour will be mid-afternoon. Participants expressed interest in visiting restoration sites and seeing what work is left to be done. Paul said that there were a lot of concerns about the length of time restoration is taking and the costs. Rose indicated that those were appropriate topics to discuss and said that the Feasibility Studies prepared for specific sites provide details on the alternatives, costs, and the time to remediate. She said that this is part of the path that is followed and that it takes time. She referred him to

the document status table which shows the stages of the documents that follow the steps of the CERCLA process and what needs to happen as the stages are worked through.

Paul expressed concern that this is going on for years. Steve Tzhone said that some contamination at the site is found in the groundwater and that they are looking at ways to address these things. It may not seem evident aboveground, since the contamination in the groundwater is all below surface. Steve indicated that a significant groundwater issue at Longhorn is perchlorate, which is considered an "emerging contaminant" and now has a reference dose that came out a couple years ago. He suggested that the tour participants indicate their interests and the specific sites they would like to see.

Introductions were made for meeting participants: Eddie and Nancy Ray, who are resident volunteers for the Caddo Lake National Wildlife Refuge (Refuge); Jason Roesner with the U.S. Fish and Wildlife Service and the Refuge Assistant Manager; RAB members Tom Walker, Nigel Shivers, and RAB Co-Chair Paul Fortune; and Caddo Lake Institute's Rick Lowerre.

The tour has been set for January 26, 2010 at 3:00 PM. Fay Duke and Steve indicated that they would be available that day. Paul indicated that Buddy Collins, mayor of Marshall, and Jeff Thompson, Harrison County Commissioner, would both like to attend. They definitely wanted to look at the Pistol Range site. Rose said that she would work out the details and the site locations with the RAB as the date gets closer.

Programmatic Issues

Site Status Summary

The schedule locks down the dates, making them enforceable. The public can search on CERCLIS website and find this schedule. The National Priorities List (NPL) and NPL-caliber sites are EPA lead sites. The non-NPL sites are TCEQ lead.

Defense Environmental Restoration Program (DERP) Performance Based Contract (PBC) Update–Shaw

Document Status/Environmental Sites

Greg Jones distributed copies of the document status table and discussed each site on the table.

- Greg indicated that the LHAAP-02 decision document is in comment resolution after Army's review. The decision document calls for limited groundwater monitoring in order to address the soil-to-groundwater COCs within LHAAP-02.
- A soil removal work plan for LHAAP-03 is being developed.
- The Draft Completion Report for LHAAP-04 is in preparation.

Tom Walker asked about the removal of soil at LHAAP-04 and wanted to know where it was taken. Greg said that the soil from both LHAAP-04 and the Pistol Range was analyzed to determine if it was hazardous or non-hazardous. If non-hazardous, it was taken to a facility in Louisiana; and hazardous soil went to a facility in Robstown, Texas. All the waste from LHAAP was considered non-hazardous.

Paul asked about the disposal of brick from the Powerhouse Demolition and where it went. John Lambert said it went to a licensed asbestos disposal facility.

A question about the overall CERCLA process was asked. It was explained that the FS stage is the time when potential remedial alternatives for cleaning up a site are evaluated using nine criteria. Upon selection of the most appropriate remedy, that remedy is presented in the ROD and then implemented through the Remedial Design and/or Remedial Action. The steps are Feasibility Study – Proposed Plan – Record of Decision – Remedial Design – Remedial Action.

- Surveys for LHAAP-06, -07, -51, -55, -64, -66, and -68 are underway for the county notification. A draft affidavit for LHAAP-06 has been submitted to Army for review.
- Comment resolution is in progress for the LHAAP-16 Draft Final Feasibility (FS) Study.
- Comment resolution is in progress for the LHAAP-17 Draft Final FS.
- Army comments were received and resolution is in progress for the Draft FS for LHAAP-18/24.
- Revised responses to comments have been reviewed by Army and responses are being prepared for the regulatory submittal of the Draft Final FS for LHAAP-29.
- The Final FS for LHAAP-46 was submitted October 2009. Responses to Army's comments on the Draft Proposed Plan for LHAAP-46 are in preparation.
- Comment resolution is in progress on the Draft FS for LHAAP-47.
- The Draft Final Proposed Plan for LHAAP-49 is in progress. The Draft Record of Decision (ROD) for LHAAP-49 is in Army review.
- Resolution of comments on the Draft Final FS for LHAAP-50 is in progress. The responses to comments are also in progress for the Draft Proposed Plan.
- Responses to comments for the Draft Final FS for LHAAP-58 are in regulatory review. The Draft Proposed Plan for LHAAP-58 is in comment resolution.
- Survey for LHAAP-60 is expected soon. A draft affidavit for LHAAP-60 has been submitted to Army for review.
- Resolution of comments on the Draft Final Decision Document for LHAAP-35/36 is in progress.
- The Draft Final Completion Report for the Pistol Range is in regulatory review. Responses to the Draft Proposed Plan for the Pistol Range are in preparation.

Groundwater Treatment Plant (GWTP) Update
The plant is operating normally and runs approximately 180 to 200 gallons/minute.

Perimeter wells and surface water (creek) sampling results were presented.

DERP Total Environmental Restoration Contract (TERC) Update – Rose Zeiler

ROD for Sites LHAAP-37 and -67
This ROD is expected to be submitted this calendar year (2010).

Military Munitions Response Program (MMRP) Update – USACE
The MMRP sites at LHAAP consist of LHAAP-27 Static Bomb Area and LHAAP-54 Test Area. John Lambert indicated that two components were addressed under this program: explosive ordnance and chemical residue. MEC was cleared from both sites by surface and by depth. Processing of munitions debris (which is inert) is winding up. They are conducting metes and bounds survey for the county recordation of site boundary and land use control. The chemical residue is being summarized in a report that pulls together all chemical analysis and ensures that no chemical is overlooked. EPA wanted more current data, so they have sampled in the area recently. These new data will be incorporated into the report. Rick Lowerre asked if there were site restrictions. John indicated that land use controls are in place and that the controls insure that no intrusive activities can take place within the boundaries designated. These controls include specific signage, county recordation, and educational training regarding use of the Refuge for the "Big 6" activities. Rose indicated that pyrotechnics or illuminants and flares were part of the cultural debris found, but they were not explosives. However, items that could not be guaranteed to be inert were blown up. Both surface clearance and geophysical survey were conducted.

Other Environmental Restoration Issues/Concerns – USACE

Construction Debris Landfill
Aaron Williams indicated that the landfill cap and closure assessment is being prepared. The Army conducted soil and groundwater sampling around the landfill. The construction debris landfill did not have complete records so these activities had to be performed with caution. The landfill cap has been seeded with native grasses.

Paul asked if the dirt at the landfill was contaminated. Aaron indicated that it was not, clean soil was brought in to ensure an 18-inch landfill cover. Additionally, soil and groundwater around the landfill had not been impacted from the landfill as documented by sampling. John Lambert explained that landfill closure requirements fall under a "permit by rule". Part of the certification of the landfill cap construction includes verifying that there is good cover on the landfill. Because of the incomplete records of what went in the landfill, more standards were imposed on the closure. This was actually not an environmental restoration site, but it did have environmental issues. BRAC O & M funds were used to close the landfill. The landfill cap has been properly certified.

Transfer Update

Powerhouse Demolition Progress
The demolition of the Powerhouse has been completed. This was a demolition and was not conducted under the environmental restoration program. Construction debris that was identified as potentially asbestos-containing material was contained and disposed in an appropriate manner.

Transfer Status of Site 12
There has been no change.

ECOP VI
This is in the draft final stage.

The next RAB meeting is March 9, 2010, at 6:30 PM. A public meeting is tentatively scheduled for January 26, 2010.

Adjourn

December Meeting Attachments and Handouts:

- *Status of Technical Documents PBC*
- *Meeting Agenda*

Shaw Environmental, Inc.

Status of Sites and Technical Documents
Longhorn Army Ammunition Plant – PBC Contract
December 1, 2009

No.	Document in Progress	Submittal Date	Army	Regulator	Next Submittal	Expected Date	Army	Regulator	Comment Resolution	Status	Remarks
1	Draft Rev 01Decision Document, LHAAP-02	10/01/09	x		Draft Final	12/15/09	x	x		In comment resolution after Army's review	DD calls for limited groundwater monitoring
2	Draft Soil Removal Work Plan, LHAAP-03	12/30/09	x							In preparation	
3	Draft Completion Report, LHAAP-04	12/15/09	x							In preparation	
4	County Notification LHAAP-06, 07, 51, 55, 64, 66, 68	11/30/09	x							Draft for LHAAP-06 submitted for Army review. Others in preparation.	One survey remaining.
5	Draft Final Feasibility Study Addendum, Rev 01, LHAAP-16	7/3/08		x	Final	12/15/09	x	x	In progress	RTCs in regulatory review	
6	Draft Final Feasibility Study, LHAAP-17	4/14/09	x	x	Final	12/15/09	x	x	In progress	RTCs in regulatory review	
7	Draft Feasibility Study, LHAAP-18/24	3/3/09	x		Draft Final	01/31/09	x	x	In progress	Army comments received. Resolution in progress. Revised RTCs in Army's review as of 7/26/09	
8	Draft Final Feasibility Study, LHAAP-29	03/11/09	x	x	RTC	12/16/09	x	x	In progress	Revised RTCs reviewed by Army. Preparing RTCs for submittal to regulators	

Shaw Environmental, Inc.

Status of Sites and Technical Documents
Longhorn Army Ammunition Plant – PBC Contract
December 1, 2009

No.	Document in Progress	Submittal Date	Army	Regulator	Next Submittal	Expected Date	Army	Regulator	Comment Resolution	Status	Remarks
9	Final Focused Feasibility Study, LHAAP-46	10/30/09	x	x					Resolution complete	Final FS submitted	
10	Draft Proposed Plan, LHAAP-46	9/29/09	x		Draft Final	12/15/09	x	x	In progress	Army comments received.	
11	Draft Focused Feasibility Study, LHAAP-47	12/23/08	x		Draft Final	1/30/10	x	x	In progress	Army comments received. Conducted a new round of groundwater sampling. Submitted revised RTCs on 9/24/09	
12	Draft Final Proposed Plan, LHAAP-49	9/14/09	x	x	Final	12/15/09			Complete	Regulatory review complete. TCEQ response awaited.	
13	Draft ROD, LHAAP-49	10/20/09	x		Draft Final	12/22/09	x	x		In Army review	
14	Draft Final Feasibility Study, LHAAP-50	11/20/08	x	x	Final	12/15/09	x	x	In progress	RTCs in regulatory review. TCEQ comments received. EPA comments pending.	
15	Draft Proposed Plan, LHAAP-50	10/16/09	x		Draft Final	12/15/09	x	x	In progress	Army's review complete. RTCs in preparation	
16	Draft Final Feasibility Study, LHAAP-58	9/20/07	x	x	Final	11/30/09	x	x	In progress	RTCs in regulatory review. EPA comments pending.	
17	Draft Proposed Plan, LHAAP-58	10/08/09	x		Draft Final	11/20/09	x	x	In progress	Comment resolution in progress.	
18	County Notification, LHAAP-60	Nov 2009							In preparation		

Shaw Environmental, Inc.

Status of Sites and Technical Documents
Longhorn Army Ammunition Plant – PBC Contract
December 1, 2009

No.	Document in Progress	Submittal Date	Army	Regulator	Next Submittal	Expected Date	Army	Regulator	Comment Resolution	Status	Remarks
19	Draft Final Decision Document, LHAAP-35/36	7/15/09	x	x	Final	12/15/09	x	x	Resolved	TCEQ comment received on DF DD. Resolution in progress.	
20	Draft Final Completion Report, Pistol Range	10/7/09	x		Draft Final	11/12/09	x	x	Comments resolved	Draft Final in regulatory review	
21	Draft Proposed Plan, Pistol Range	10/7/09	x		Draft Final	12/15/09	x	x		Army review complete. RTCs in preparation	

00078394

Shaw Environmental, Inc.

Longhorn Army Ammunition Plant
Restoration Advisory Board Meeting

Location	Karnack Community Center, Karnack, Texas
Date	1-Dec-2009 6:30 PM **page 1 of 1**

Please sign in the space provided or add your name and address on next page if your name does not appear below.

ATTENDEES

Name (printed)	Signature	Organization	Phone	E-mail
RAB Members				
Paul Fortune		RAB Co-Chair		plfortune@hotmail.com
Robert Speight, Jr.		RAB Board Member		r.speightjr@att.net
Larry McCathran		RAB Board Member		MMCattle@yahoo.com
Nigel R. Shivers		RAB Board Member	903-679-4128	nigelshivers@yahoo.com
Tom Walker		RAB Board Member		twalkercaddolake@gmail.com
Judith Johnson		RAB Board Member		judithjohnson@webtv.net
Ken Shaw		RAB Board Member		kens@shreve.net
Longhorn Team Members and Community				
Rose M. Zeiler		Longhorn AAP	(479) 635-0110	rose.zeiler@us.army.mil
Matthew Mechenes		USAEC	(410) 436-1505	matthew.mechenes@us.army.mil
Aaron Williams		USACE, Tulsa	(918) 669-4915	aaron.k.williams@usace.army.mil
John Lambert		USACE, Tulsa	(918) 669-4992	john.r.lambert@SWT03.usace.army.mil
Scottie Fiehler		USACE, Tulsa	(918) 669-7232	scottie.fiehler@us.army.mil
Steve Tzhone		USEPA, Dallas	(214) 665-8409	tzhone.stephen@epa.gov
Raji Josiam		USEPA, Dallas	(214) 665-8529	josiam.raji@epa.gov
Fay Duke		TCEQ, Austin	(512) 239-2443	fduke@tceq.state.tx.us
Dale Vodak		TCEQ	(903) 535-5142	dvodak@tceq.state.tx.us
Paul Bruckwicki		USFSW	(903) 679-4536	paul_bruckwicki@fws.gov
Barry Forsythe		USFSW	(214) 665-8467	forsythe.barry@epa.gov
Mark Williams		USFSW	(903) 679-9144	mark_williams@fws.gov
Praveen Srivastav		SHAW	(713) 996-4588	praveen.srivastav@shawgrp.com
Greg Jones		SHAW	(713) 996-4472	greg.n.jones@shawgrp.com
Kay Everett		SHAW	(713) 996-4421	kay.everett@shawgrp.com
Van Vernade		Shaw		
Kent Becher		USGS - Fort Worth	817-263-9544	kdbecher@usgs.gov
NANCY RAY		Caddo Lake NWR - Volunteer	903-235-2442	
EDDIE RAY		Caddo Lake NWR - Volunteer	903-315-8228	
JASON RESNER		USFWS	903/679-9144	Jason-resner@fws.gov