LONGHORN ARMY AMMUNITION PLANT KARNACK, TEXAS

ADMINISTRATIVE RECORD

Volume 16 of 19

2010

Bate Stamp Numbers
00095741 – 00096687

Prepared for

Department of the Army
Longhorn Army Ammunition Plant

1976 – 2010

LONGHORN ARMY AMMUNITION PLANT
KARNACK, TEXAS
ADMINISTRATIVE RECORD – CHRONOLOGICAL INDEX

VOLUME 16 of 19

2010

A. Title: Report – (Continued) Final Feasibility Study, LHAAP-29, Former TNT Production Area, Group 2, Longhorn Army Ammunition Plant, Karnack, Texas, April 2010
Author(s): US Army Corps of Engineers
Recipient: USEPA
Date: April 30, 2010
Bate Stamp: 00095741 – 00096687

156 Starlite Drive, Marietta, OH 45750 • TEL 740-373-4071 • FAX 740-373-4835 • http://www.kemron.com

Laboratory Report Number: L0611537

Please find enclosed the analytical results for the samples you submitted to KEMRON Environmental Services.

Review and compilation of your report was completed by KEMRON's Sales and Service Team. If you have questions, comments or require further assistance regarding this report, please contact your team member noted in the reviewed box bleow at 800-373-4071. Team member e-mail addresses also appear here for your convenience.

Debra Elliott - Team Leader
delliott@kemron-lab.com

Amanda Fickiesen - Client Services Specialist
afickiesen@kemron-lab.com

Cheryl Koelsch - Team Chemist/Data Specialist
ckoelsch@kemron-lab.com

Annie Bock - Client Services Specialist
abock@kemron-lab.com

Stephanie Mossburg - Team Chemist/Data Specialist
smossburg@kemron-lab.com

Katie Barnes - Team Assistant
kbarnes@kemron-lab.com

Kathy Albertson - Team Chemist/Data Specialist
kalbertson@kemron-lab.com

Cara Strickler - Team Assistant
cstrickler@kemron-lab.com

This report was reviewed on December 04, 2006.

Stephanie Mossburg

STEPHANIE MOSSBURG - Team Chemist/Data Specialist

I certify that all test results meet all of the requirements of the NELAP standards and other applicable contract terms and conditions. All results for soil samples are reported on a 'dry-weight' basis unless specified otherwise. Analytical results for water and wastes are reported on a 'as received' basis unless specified otherwise. A statement of uncertainty for each analysis is available upon request. This laboratory report shall not be reproduced, except in full, without the written approval of KEMRON Environmental Services.

This report was certified on December 04, 2006.

David E. Vandenberg

David Vandenberg - Vice President

FL DOH NELAP ID: E8755
This report contains a total of 119 pages.

Protecting Our Environmental Future

LABORATORY REPORT

L0611537 00095742

12/04/06 13:23

Submitted By

KEMRON Environmental Services
156 Starlite Drive
Marietta , OH 45750
(740) 373 - 4071

For

Account Name: Shaw E & I, Inc.
ABB Lummus Biulding
3010 Briarpark
Houston, TX 77042
Attention: Diane Mever

Account Number: 2773
Work ID: LONGHORN AAD

P.O. Number: 200328

Sample Summary

Client ID	Lab ID	Date Collected	Date Received
LAP-29WW35-2ND	L0611537-01	20-NOV-06	22-NOV-06
LAP-29WW36-2ND	L0611537-02	17-NOV-06	22-NOV-06
LAP-29WW37-2ND	L0611537-03	17-NOV-06	22-NOV-06
LAP-29WW38-2ND	L0611537-04	20-NOV-06	22-NOV-06
LAP-29WW39-2ND	L0611537-05	20-NOV-06	22-NOV-06
LAP-29WW40-2ND	L0611537-06	21-NOV-06	22-NOV-06
LAP-29WW40-2ND DUP	L0611537-07	21-NOV-06	22-NOV-06
LAP-29WW40-2ND MS	L0611537-08	21-NOV-06	22-NOV-06
LAP-29WW40-2ND MSD	L0611537-09	21-NOV-06	22-NOV-06
TRIP BLANK	L0611537-10	21-NOV-06	22-NOV-06

KEMRON ENVIRONMENTAL SERVICES
REPORT NARRATIVE

KEMRON Login No.: L0611537

CHAIN OF CUSTODY: The chain of custody number was 66599.

SHIPMENT CONDITIONS: The chain of custody forms were received sealed in a cooler. The cooler temperature was 6 degrees C.

SAMPLE MANAGEMENT: All samples received were intact.

I certify that this data package is in compliance with the terms and conditions agreed to by the client and KEMRON Environmental Services, both technically and for completeness, except for the conditions noted above. Release of the data contained in this hardcopy data package has been authorized by the Laboratory Manager or designated person, as verified by the following signature.

Approved: 29-NOV-06
Stephanie Moosburg

Laboratory Data Package Cover Page

00095744

This data Package consists of:

This signature page, the laboratory review checklists, and the following reportable data:

✓R1 Field chain-of-custody documentation;

✓R2 sample identification cross-reference;

R3 Test reports (analytical data sheets) for each enviornmental sample that includes:

a) Items consistant with NELAC 5.13 or ISO/IEC 17025 Section 5.10
b) dilution factors,
c) preparation methods,
d) Cleanup methods, and
e) If required for the project, tentatively identified compounds (TICs)

✓R4 Surrogate recovery data including:

a) Calculated recovery (%R) for each analyte, and
b) The laboratory's surrogate QC limits.

✓R5 Test reports/summary forms for blank samples;

✓R6 Test reports/summary forms for laboratory control samples (LCSs) including:

a) LCS spiking amount,
b) Calculated %R for each analyte, and
c) The laboratory"s LCS QC limits.

✓R7 Test reports for project matrix spike/matrix spike duplicates (MS/MSDs) including:

a) Samples associated with the MS/MSD clearly identified,
b) MS/MSD spiking amounts,
c) Concentration of each MS/MSD analyte measured in the parent and spiked samples,
d) Calculated %R and relative percent differences (RPDs), and
e) The laboratory's MS/MSD QC limits

✓R8 Laboratory analytical duplicate (if applicable) revocery and precision:

a) the amount of analyte measured in the duplicate,
b) the calculated RPD, and
c) the laboratory's QC limits for anlytical duplicates.

✓R9 List of method quantitation limits (MQLs) for each analyte for each method and matrix;

✓R10 Other problems or anomalies.

✓The exception Report for every "No" or "Not Reviewed (NR)" item IN laboratory review checklist.

Release statement: I am responsible for the release of this laboratory data package. This data package has been reviewed by the laboratory and is complete and technically compliant with the requirements of the methods used, except where noted by the laboratory in the attached exceptions reports. By my signature below, I affirm to the best of my knowledge, all problems/anomalies, observed by the laboratory as having the potential to affect the quality of the data, have been identified by the laboratoy in the Laboratory Review Checklist, and no information or data have been knowingly withheld that would affect the quality of the data.

Check, if applicable: [✓] This laboratory is an in-house laboratory controlled by the person repsonding to rule. The official signing the cover page of the rule-required report (for example, the APAR) in which these data are used is responsible for releasing this data package and is by signature affirming the above release statement is true.

MIKE D. ALBERTSON		Volatiles Lab Supervisor	December 4, 2006
Name (Printed)	Signature	Official Title (printed)	DATE

RG-366/TRRP-13 December 2002 A1

KEMRON Environmental Services
Laboratory Review Checklist

Laboratory Name:	KEMRON
Laboratory Log Number:	L0611537
Project Name:	798-LONGHORN
Method:	8260B
Prep Batch Number(s):	228326, 228430, 228433
Reviewer Name:	MIKE D. ALBERTSON
LRC Date:	December 04, 2006

Description	Yes	No	NA(1)	NR(2)	ER(3)
Chain-Of-Custody (C-O-C)					
Did samples meet the laboratory's standard conditions of sample acceptability upon receipt?	✓				
Were all departures from standard conditions described in an exception report?	✓				
Sample and quality control (QC) identification					
Are all field sample ID numbers cross-referenced to the laboratory ID numbers?	✓				
Are all laboratory ID numbers cross-referenced to the corresponding QC data?	✓				
Test reports					
Were all samples prepared and analyzed within holding times?	✓				
Other than those results <MQL, were all other raw values bracketed by calibration standards?	✓				
Were calculations checked by a peer or supervisor?	✓				
Were all analyte identifications checked by a peer or supervisor?	✓				
Were sample quantitation limits reported for all analytes not detected?	✓				
Were all results for soil and sediment samples reported on a dry weight basis?	✓				
Were % moisture (or solids) reported for all soil and sediment samples?	✓				
If required for the project, TICs reported?			✓		
Surrogate recovery data					
Were surrogates added prior to extraction?	✓				
Were surrogate percent recoveries in all samples within the laboratory QC limits?	✓				
Test reports/summary forms for blank samples					
Were appropriate type(s) of blanks analyzed?	✓				
Were blanks analyzed at the appropriate frequency?	✓				
Were method blanks taken through the entire analytical process, including preparation and, if applicable, cleanup procedures?	✓				
Were blank concentrations <MQL?	✓				
Laboratory control samples (LCS):					
Were all COCs included in the LCS?	✓				
Was each LCS taken through the entire analytical procedure, including prep and cleanup steps?	✓				
Were LCSs analyzed at the required frequency?	✓				
Were LCS (and LCSD, if applicable) %Rs within the laboratory QC limits?		✓			1
Does the detectability data document the laboratorys capability to detect the COCs at the MDL used to calculate the SQLs?	✓				
Was the LCSD RPD within QC limits?	✓				
Matrix spike (MS) and matrix spike duplicate (MSD) data					
Were the project/method specified analytes included in the MS and MSD?	✓				
Were MS/MSD analyzed at the appropriate frequency?	✓				
Were MS (and MSD, if applicable) %Rs within the laboratory QC limits?		✓			2

Description	Yes	No	NA(1)	NR(2)	ER(3)
Were MS/MSD RPDs within laboratory QC limits?		✓			1
Analytical duplicate data					
Were appropriate analytical duplicates analyzed for each matrix?			✓		
Were analytical duplicates analyzed at the appropriate frequency?			✓		
Were RPDs or relative standard deviations within the laboratory QC limits?			✓		
Method quantitation limits (MQLs):					
Are the MQLs for each method analyte included in the laboratory data package?	✓				
Do the MQLs correspond to the concentration of the lowest non-zero calibration standard?	✓				
Are unadjusted MQLs included in the laboratory data package?	✓				
Other problems/anomalies					
Are all known problems/anomalies/special conditions noted in this LRC and ER?	✓				3
Were all necessary corrective actions performed for the reported data?	✓				
Was applicable and available technology used to lower the SQL minimize the matrix interference affects on the sample results?	✓				
ICAL					
Were response factors and/or relative response factors for each analyte within QC limits?	✓				
Were percent RSDs or correlation coefficient criteria met?	✓				
Was the number of standards recommended in the method used for all analytes?	✓				
Were all points generated between the lowest and highest standard used to calculate the curve?	✓				
Are ICAL data available for all instruments used?	✓				
Has the initial calibration curve been verified using an appropriate second source standard?	✓				
Initial and continuing calibration verification (ICV and CCV) and continuing calibration blank (CCB):					
Was the CCV analyzed at the method-required frequency?	✓				
Were percent differences for each analyte within the method-required QC limits?	✓				
Was the ICAL curve verified for each analyte?	✓				
Was the absolute value of the analyte concentration in the inorganic CCB <MDL?			✓		
Mass spectral tuning:					
Was the appropriate compound for the method used for tuning?	✓				
Were ion abundance data within the method-required QC limits?	✓				
Internal standards (IS):					
Were IS area counts and retention times within the method-required QC limits?	✓				
Raw data (NELAC section 1 appendix A glossary, and section 5.12 or ISO/IEC 17025 section 4.12.2)					
Were the raw data (for example, chromatograms, spectral data) reviewed by an analyst?	✓				
Were data associated with manual integrations flagged on the raw data?	✓				
Dual column confirmation					
Did dual column confirmation results meet the method-required QC?			✓		
Tentatively identified compounds (TICs):					
If TICs were requested, were the mass spectra and TIC data subject to appropriate checks?			✓		
Interference Check Sample (ICS) results:					
Were percent recoveries within method QC limits?			✓		
Serial dilutions, post digestion spikes, and method of standard additions					
Were percent differences, recoveries, and the linearity within the QC limits specified in the method?			✓		
Method detection limit (MDL) studies					
Was a MDL study performed for each reported analyte?	✓				
Is the MDL either adjusted or supported by the analysis of DCSs?	✓				
Proficiency test reports:					
Was the laboratory's performance acceptable on the applicable proficiency tests or evaluation studies?	✓				

Description	Yes	No	NA(1)	NR(2)	ER(3)
Standards documentation					
Are all standards used in the analyses NIST-traceable or obtained from other appropriate sources?	✓				
Compound/analyte identification procedures					
Are the procedures for compound/analyte identification documented?	✓				
Demonstration of analyst competency (DOC)					
Was DOC conducted consistent with NELAC Chapter 5C or ISO/IEC 4?	✓				
Is documentation of the analyst's competency up-to-date and on file?	✓				
Verification/validation documentation for methods (NELAC Chap 5 or ISO/IEC 17025 Section 5)					
Are all the methods used to generate the data documented, verified, and validated, where applicable?	✓				
Laboratory standard operating procedures (SOPs):					
Are laboratory SOPs current and on file for each method performed?	✓				

EXCEPTIONS REPORT

ER# - Description

#1: Chloromethane exceeded the upper advisory limit in the LCS analyzed 11/29/06 on HPMS-8.

#2: 2-Chloroethylvinyl ether was not detected and chloromethane exceeded the upper advisory limit in the MS/MSD analyses of sample 06.

#3: The presence of hexachlorobutadiene and 1,2,3-trichlorobenzene in sample 07 may be attributed to carry-over contamination from a previous analysis.

Footnotes:

(1) NA = Not applicable to method or project

(2) NR = Not reviewed

(3) ER# = Exception report number

Report Number: **L0611537**
Report Date : **December 4, 2006**

00095748

Sample Number: **L0611537-01**
Client ID: **LAP-29WW35-2ND**
Matrix: **Water**
Workgroup Number: **WG228326**
Collect Date: **11/20/2006 15:25**
Sample Tag: **01**

PrePrep Method: **NONE**
Prep Method: **5030B**
Analytical Method: **8260B**
Analyst: **CMS**
Dilution: **1**
Units: **ug/L**

Instrument: **HPMS8**
Prep Date: **11/28/2006 12:33**
Cal Date: **11/03/2006 21:42**
Run Date: **11/28/2006 12:33**
File ID: **8M332379**

Analyte	CAS. Number	Result	Qual	PQL	SQL
Acetone	67-64-1		U	10.0	2.50
Benzene	71-43-2		U	1.00	0.125
Bromobenzene	108-86-1		U	1.00	0.125
Bromochloromethane	74-97-5		U	1.00	0.200
Bromodichloromethane	75-27-4		U	1.00	0.250
Bromoform	75-25-2		U	1.00	0.500
Bromomethane	74-83-9		U	1.00	0.500
2-Butanone	78-93-3		U	10.0	2.50
n-Butylbenzene	104-51-8		U	1.00	0.250
sec-Butylbenzene	135-98-8		U	1.00	0.250
tert-Butylbenzene	98-06-6		U	1.00	0.250
Carbon disulfide	75-15-0	3.26		1.00	0.500
Carbon tetrachloride	56-23-5		U	1.00	0.250
Chlorobenzene	108-90-7		U	1.00	0.125
Chlorodibromomethane	124-48-1		U	1.00	0.250
Chloroethane	75-00-3		U	1.00	0.500
2-Chloroethyl vinyl ether	110-75-8		U	10.0	2.00
Chloroform	67-66-3		U	1.00	0.125
Chloromethane	74-87-3	0.549	J	1.00	0.250
2-Chlorotoluene	95-49-8		U	1.00	0.125
4-Chlorotoluene	106-43-4		U	1.00	0.250
1,2-Dibromo-3-chloropropane	96-12-8		U	5.00	1.00
1,2-Dibromoethane	106-93-4		U	1.00	0.250
Dibromomethane	74-95-3		U	1.00	0.250
1,2-Dichlorobenzene	95-50-1		U	1.00	0.125
1,3-Dichlorobenzene	541-73-1		U	1.00	0.250
1,4-Dichlorobenzene	106-46-7		U	1.00	0.125
Dichlorodifluoromethane	75-71-8		U	1.00	0.250
1,1-Dichloroethane	75-34-3		U	1.00	0.125
1,2-Dichloroethane	107-06-2		U	1.00	0.250
1,1-Dichloroethene	75-35-4		U	1.00	0.500
cis-1,2-Dichloroethene	156-59-2	0.619	J	1.00	0.250
trans-1,2-Dichloroethene	156-60-5		U	1.00	0.250
1,2-Dichloropropane	78-87-5		U	1.00	0.200
1,3-Dichloropropane	142-28-9		U	1.00	0.200
2,2-Dichloropropane	594-20-7		U	1.00	0.250
cis-1,3-Dichloropropene	10061-01-5		U	1.00	0.250
trans-1,3-Dichloropropene	10061-02-6		U	1.00	0.500
1,1-Dichloropropene	563-58-6		U	1.00	0.250
Ethylbenzene	100-41-4		U	1.00	0.250
2-Hexanone	591-78-6		U	10.0	2.50
Hexachlorobutadiene	87-68-3		U	1.00	0.250
Isopropylbenzene	98-82-8		U	1.00	0.250
p-Isopropyltoluene	99-87-6		U	1.00	0.250
4-Methyl-2-pentanone	108-10-1		U	10.0	2.50
Methylene chloride	75-09-2	1160	I	5.00	0.250
Naphthalene	91-20-3		U	1.00	0.200
n-Propylbenzene	103-65-1		U	1.00	0.125

Report Number: **L0611537**
Report Date : **December 4, 2006**

00095749

Sample Number: **L0611537-01**
Client ID: **LAP-29WW35-2ND**
Matrix: **Water**
Workgroup Number: **WG228326**
Collect Date: **11/20/2006 15:25**
Sample Tag: **01**

PrePrep Method: **NONE**
Prep Method: **5030B**
Analytical Method: **8260B**
Analyst: **CMS**
Dilution: **1**
Units: **ug/L**

Instrument: **HPMS8**
Prep Date: **11/28/2006 12:33**
Cal Date: **11/03/2006 21:42**
Run Date: **11/28/2006 12:33**
File ID: **8M332379**

Analyte	CAS. Number	Result	Qual	PQL	SQL
Styrene	100-42-5		U	1.00	0.125
1,1,1,2-Tetrachloroethane	630-20-6		U	1.00	0.250
1,1,2,2-Tetrachloroethane	79-34-5		U	1.00	0.125
Tetrachloroethene	127-18-4		U	1.00	0.250
Toluene	108-88-3		U	1.00	0.250
1,2,3-Trichlorobenzene	87-61-6		U	1.00	0.125
1,2,4-Trichlorobenzene	120-82-1		U	1.00	0.200
1,1,1-Trichloroethane	71-55-6		U	1.00	0.250
1,1,2-Trichloroethane	79-00-5		U	1.00	0.250
Trichloroethene	79-01-6	43.5		1.00	0.250
Trichlorofluoromethane	75-69-4		U	1.00	0.250
1,2,3-Trichloropropane	96-18-4		U	1.00	0.500
1,2,4-Trimethylbenzene	95-63-6		U	1.00	0.250
1,3,5-Trimethylbenzene	108-67-8		U	1.00	0.250
Vinyl acetate	108-05-4		U	10.0	2.50
Vinyl chloride	75-01-4		U	1.00	0.250
o-Xylene	95-47-6		U	1.00	0.250
m-,p-Xylene	136777-61-2		U	1.00	0.500

Surrogate	% Recovery	Lower	Upper	Qual
Dibromofluoromethane	95.7	86	118	
1,2-Dichloroethane-d4	99.5	80	120	
Toluene-d8	96.0	88	110	
4-Bromofluorobenzene	92.6	86	115	

U Not detected at or above adjusted sample detection limit
J The analyte was positively identified, but the quantitation was below the RL
I Semiquantitative result (out of instrument calibration range)

Sample Number: **L0611537-01**
Client ID: **LAP-29WW35-2ND**
Matrix: **Water**
Workgroup Number: **WG228430**
Collect Date: **11/20/2006 15:25**
Sample Tag: **DL01**

PrePrep Method: **NONE**
Prep Method: **5030B**
Analytical Method: **8260B**
Analyst: **CMS**
Dilution: **20**
Units: **ug/L**

Instrument: **HPMS8**
Prep Date: **11/29/2006 11:23**
Cal Date: **11/03/2006 21:42**
Run Date: **11/29/2006 11:23**
File ID: **8M332400**

Analyte	CAS. Number	Result	Qual	PQL	SQL
Acetone	67-64-1		U	200	50.0
Benzene	71-43-2		U	20.0	2.50
Bromobenzene	108-86-1		U	20.0	2.50
Bromochloromethane	74-97-5		U	20.0	4.00
Bromodichloromethane	75-27-4		U	20.0	5.00
Bromoform	75-25-2		U	20.0	10.0
Bromomethane	74-83-9		U	20.0	10.0
2-Butanone	78-93-3		U	200	50.0
n-Butylbenzene	104-51-8		U	20.0	5.00
sec-Butylbenzene	135-98-8		U	20.0	5.00
tert-Butylbenzene	98-06-6		U	20.0	5.00
Carbon disulfide	75-15-0		U	20.0	10.0
Carbon tetrachloride	56-23-5		U	20.0	5.00
Chlorobenzene	108-90-7		U	20.0	2.50

Report Number: **L0611537**
Report Date : **December 4, 2006**

00095750

Sample Number: **L0611537-01**
Client ID: **LAP-29WW35-2ND**
Matrix: **Water**
Workgroup Number: **WG228430**
Collect Date: **11/20/2006 15:25**
Sample Tag: **DL01**

PrePrep Method: **NONE**
Prep Method: **5030B**
Analytical Method: **8260B**
Analyst: **CMS**
Dilution: **20**
Units: **ug/L**

Instrument: **HPMS8**
Prep Date: **11/29/2006 11:23**
Cal Date: **11/03/2006 21:42**
Run Date: **11/29/2006 11:23**
File ID: **8M332400**

Analyte	CAS. Number	Result	Qual	PQL	SQL
Chlorodibromomethane	124-48-1		U	20.0	5.00
Chloroethane	75-00-3		U	20.0	10.0
2-Chloroethyl vinyl ether	110-75-8		U	200	40.0
Chloroform	67-66-3		U	20.0	2.50
Chloromethane	74-87-3		U	20.0	5.00
2-Chlorotoluene	95-49-8		U	20.0	2.50
4-Chlorotoluene	106-43-4		U	20.0	5.00
1,2-Dibromo-3-chloropropane	96-12-8		U	100	20.0
1,2-Dibromoethane	106-93-4		U	20.0	5.00
Dibromomethane	74-95-3		U	20.0	5.00
1,2-Dichlorobenzene	95-50-1		U	20.0	2.50
1,3-Dichlorobenzene	541-73-1		U	20.0	5.00
1,4-Dichlorobenzene	106-46-7		U	20.0	2.50
Dichlorodifluoromethane	75-71-8		U	20.0	5.00
1,1-Dichloroethane	75-34-3		U	20.0	2.50
1,2-Dichloroethane	107-06-2		U	20.0	5.00
1,1-Dichloroethene	75-35-4		U	20.0	10.0
cis-1,2-Dichloroethene	156-59-2		U	20.0	5.00
trans-1,2-Dichloroethene	156-60-5		U	20.0	5.00
1,2-Dichloropropane	78-87-5		U	20.0	4.00
1,3-Dichloropropane	142-28-9		U	20.0	4.00
2,2-Dichloropropane	594-20-7		U	20.0	5.00
cis-1,3-Dichloropropene	10061-01-5		U	20.0	5.00
trans-1,3-Dichloropropene	10061-02-6		U	20.0	10.0
1,1-Dichloropropene	563-58-6		U	20.0	5.00
Ethylbenzene	100-41-4		U	20.0	5.00
2-Hexanone	591-78-6		U	200	50.0
Hexachlorobutadiene	87-68-3		U	20.0	5.00
Isopropylbenzene	98-82-8		U	20.0	5.00
p-Isopropyltoluene	99-87-6		U	20.0	5.00
4-Methyl-2-pentanone	108-10-1		U	200	50.0
Methylene chloride	75-09-2	1400		100	5.00
Naphthalene	91-20-3		U	20.0	4.00
n-Propylbenzene	103-65-1		U	20.0	2.50
Styrene	100-42-5		U	20.0	2.50
1,1,1,2-Tetrachloroethane	630-20-6		U	20.0	5.00
1,1,2,2-Tetrachloroethane	79-34-5		U	20.0	2.50
Tetrachloroethene	127-18-4		U	20.0	5.00
Toluene	108-88-3		U	20.0	5.00
1,2,3-Trichlorobenzene	87-61-6		U	20.0	2.50
1,2,4-Trichlorobenzene	120-82-1		U	20.0	4.00
1,1,1-Trichloroethane	71-55-6		U	20.0	5.00
1,1,2-Trichloroethane	79-00-5		U	20.0	5.00
Trichloroethene	79-01-6	40.3		20.0	5.00
Trichlorofluoromethane	75-69-4		U	20.0	5.00
1,2,3-Trichloropropane	96-18-4		U	20.0	10.0
1,2,4-Trimethylbenzene	95-63-6		U	20.0	5.00
1,3,5-Trimethylbenzene	108-67-8		U	20.0	5.00

Sample Number: **L0611537-01**
Client ID: **LAP-29WW35-2ND**
Matrix: **Water**
Workgroup Number: **WG228430**
Collect Date: **11/20/2006 15:25**
Sample Tag: **DL01**

PrePrep Method: **NONE**
Prep Method: **5030B**
Analytical Method: **8260B**
Analyst: **CMS**
Dilution: **20**
Units: **ug/L**

Instrument: **HPMS8**
Prep Date: **11/29/2006 11:23**
Cal Date: **11/03/2006 21:42**
Run Date: **11/29/2006 11:23**
File ID: **8M332400**

Analyte	CAS. Number	Result	Qual	PQL	SQL
Vinyl acetate	108-05-4		U	200	50.0
Vinyl chloride	75-01-4		U	20.0	5.00
o-Xylene	95-47-6		U	20.0	5.00
m-,p-Xylene	136777-61-2		U	20.0	10.0

Surrogate	% Recovery	Lower	Upper	Qual
Dibromofluoromethane	93.7	86	118	
1,2-Dichloroethane-d4	100	80	120	
Toluene-d8	96.3	88	110	
4-Bromofluorobenzene	95.4	86	115	

U Not detected at or above adjusted sample detection limit

Sample Number: **L0611537-02**
Client ID: **LAP-29WW36-2ND**
Matrix: **Water**
Workgroup Number: **WG228430**
Collect Date: **11/17/2006 11:50**
Sample Tag: **02**

PrePrep Method: **NONE**
Prep Method: **5030B**
Analytical Method: **8260B**
Analyst: **CMS**
Dilution: **1**
Units: **ug/L**

Instrument: **HPMS8**
Prep Date: **11/29/2006 12:54**
Cal Date: **11/03/2006 21:42**
Run Date: **11/29/2006 12:54**
File ID: **8M332403**

Analyte	CAS. Number	Result	Qual	PQL	SQL
Acetone	67-64-1		U	10.0	2.50
Benzene	71-43-2		U	1.00	0.125
Bromobenzene	108-86-1		U	1.00	0.125
Bromochloromethane	74-97-5		U	1.00	0.200
Bromodichloromethane	75-27-4		U	1.00	0.250
Bromoform	75-25-2		U	1.00	0.500
Bromomethane	74-83-9		U	1.00	0.500
2-Butanone	78-93-3		U	10.0	2.50
n-Butylbenzene	104-51-8		U	1.00	0.250
sec-Butylbenzene	135-98-8		U	1.00	0.250
tert-Butylbenzene	98-06-6		U	1.00	0.250
Carbon disulfide	75-15-0		U	1.00	0.500
Carbon tetrachloride	56-23-5		U	1.00	0.250
Chlorobenzene	108-90-7		U	1.00	0.125
Chlorodibromomethane	124-48-1		U	1.00	0.250
Chloroethane	75-00-3		U	1.00	0.500
2-Chloroethyl vinyl ether	110-75-8		U	10.0	2.00
Chloroform	67-66-3		U	1.00	0.125
Chloromethane	74-87-3		U	1.00	0.250
2-Chlorotoluene	95-49-8		U	1.00	0.125
4-Chlorotoluene	106-43-4		U	1.00	0.250
1,2-Dibromo-3-chloropropane	96-12-8		U	5.00	1.00
1,2-Dibromoethane	106-93-4		U	1.00	0.250
Dibromomethane	74-95-3		U	1.00	0.250
1,2-Dichlorobenzene	95-50-1		U	1.00	0.125
1,3-Dichlorobenzene	541-73-1		U	1.00	0.250
1,4-Dichlorobenzene	106-46-7		U	1.00	0.125
Dichlorodifluoromethane	75-71-8		U	1.00	0.250
1,1-Dichloroethane	75-34-3		U	1.00	0.125

Report Number: **L0611537**
Report Date : **December 4, 2006**

00095752

Sample Number: **L0611537-02**
Client ID: **LAP-29WW36-2ND**
Matrix: **Water**
Workgroup Number: **WG228430**
Collect Date: **11/17/2006 11:50**
Sample Tag: **02**

PrePrep Method: **NONE**
Prep Method: **5030B**
Analytical Method: **8260B**
Analyst: **CMS**
Dilution: **1**
Units: **ug/L**

Instrument: **HPMS8**
Prep Date: **11/29/2006 12:54**
Cal Date: **11/03/2006 21:42**
Run Date: **11/29/2006 12:54**
File ID: **8M332403**

Analyte	CAS. Number	Result	Qual	PQL	SQL
1,2-Dichloroethane	107-06-2		U	1.00	0.250
1,1-Dichloroethene	75-35-4		U	1.00	0.500
cis-1,2-Dichloroethene	156-59-2		U	1.00	0.250
trans-1,2-Dichloroethene	156-60-5		U	1.00	0.250
1,2-Dichloropropane	78-87-5		U	1.00	0.200
1,3-Dichloropropane	142-28-9		U	1.00	0.200
2,2-Dichloropropane	594-20-7		U	1.00	0.250
cis-1,3-Dichloropropene	10061-01-5		U	1.00	0.250
trans-1,3-Dichloropropene	10061-02-6		U	1.00	0.500
1,1-Dichloropropene	563-58-6		U	1.00	0.250
Ethylbenzene	100-41-4		U	1.00	0.250
2-Hexanone	591-78-6		U	10.0	2.50
Hexachlorobutadiene	87-68-3		U	1.00	0.250
Isopropylbenzene	98-82-8		U	1.00	0.250
p-Isopropyltoluene	99-87-6		U	1.00	0.250
4-Methyl-2-pentanone	108-10-1		U	10.0	2.50
Methylene chloride	75-09-2	1.10	J	5.00	0.250
Naphthalene	91-20-3		U	1.00	0.200
n-Propylbenzene	103-65-1		U	1.00	0.125
Styrene	100-42-5		U	1.00	0.125
1,1,1,2-Tetrachloroethane	630-20-6		U	1.00	0.250
1,1,2,2-Tetrachloroethane	79-34-5		U	1.00	0.125
Tetrachloroethene	127-18-4		U	1.00	0.250
Toluene	108-88-3		U	1.00	0.250
1,2,3-Trichlorobenzene	87-61-6		U	1.00	0.125
1,2,4-Trichlorobenzene	120-82-1		U	1.00	0.200
1,1,1-Trichloroethane	71-55-6		U	1.00	0.250
1,1,2-Trichloroethane	79-00-5		U	1.00	0.250
Trichloroethene	79-01-6		U	1.00	0.250
Trichlorofluoromethane	75-69-4		U	1.00	0.250
1,2,3-Trichloropropane	96-18-4		U	1.00	0.500
1,2,4-Trimethylbenzene	95-63-6		U	1.00	0.250
1,3,5-Trimethylbenzene	108-67-8		U	1.00	0.250
Vinyl acetate	108-05-4		U	10.0	2.50
Vinyl chloride	75-01-4		U	1.00	0.250
o-Xylene	95-47-6		U	1.00	0.250
m-,p-Xylene	136777-61-2		U	1.00	0.500

Surrogate	% Recovery	Lower	Upper	Qual
Dibromofluoromethane	96.0	86	118	
1,2-Dichloroethane-d4	104	80	120	
Toluene-d8	98.2	88	110	
4-Bromofluorobenzene	96.6	86	115	

U Not detected at or above adjusted sample detection limit
J The analyte was positively identified, but the quantitation was below the RL

Report Number: **L0611537**
Report Date : **December 4, 2006**

00095753

Sample Number: **L0611537-03**
Client ID: **LAP-29WW37-2ND**
Matrix: **Water**
Workgroup Number: **WG228326**
Collect Date: **11/17/2006 10:50**
Sample Tag: **01**

PrePrep Method: **NONE**
Prep Method: **5030B**
Analytical Method: **8260B**
Analyst: **CMS**
Dilution: **1**
Units: **ug/L**

Instrument: **HPMS8**
Prep Date: **11/28/2006 13:33**
Cal Date: **11/03/2006 21:42**
Run Date: **11/28/2006 13:33**
File ID: **8M332381**

Analyte	CAS. Number	Result	Qual	PQL	SQL
Acetone	67-64-1	11.2		10.0	2.50
Benzene	71-43-2		U	1.00	0.125
Bromobenzene	108-86-1		U	1.00	0.125
Bromochloromethane	74-97-5		U	1.00	0.200
Bromodichloromethane	75-27-4		U	1.00	0.250
Bromoform	75-25-2		U	1.00	0.500
Bromomethane	74-83-9		U	1.00	0.500
2-Butanone	78-93-3		U	10.0	2.50
n-Butylbenzene	104-51-8		U	1.00	0.250
sec-Butylbenzene	135-98-8		U	1.00	0.250
tert-Butylbenzene	98-06-6		U	1.00	0.250
Carbon disulfide	75-15-0	2.14		1.00	0.500
Carbon tetrachloride	56-23-5		U	1.00	0.250
Chlorobenzene	108-90-7		U	1.00	0.125
Chlorodibromomethane	124-48-1		U	1.00	0.250
Chloroethane	75-00-3		U	1.00	0.500
2-Chloroethyl vinyl ether	110-75-8		U	10.0	2.00
Chloroform	67-66-3		U	1.00	0.125
Chloromethane	74-87-3		U	1.00	0.250
2-Chlorotoluene	95-49-8		U	1.00	0.125
4-Chlorotoluene	106-43-4		U	1.00	0.250
1,2-Dibromo-3-chloropropane	96-12-8		U	5.00	1.00
1,2-Dibromoethane	106-93-4		U	1.00	0.250
Dibromomethane	74-95-3		U	1.00	0.250
1,2-Dichlorobenzene	95-50-1		U	1.00	0.125
1,3-Dichlorobenzene	541-73-1		U	1.00	0.250
1,4-Dichlorobenzene	106-46-7		U	1.00	0.125
Dichlorodifluoromethane	75-71-8		U	1.00	0.250
1,1-Dichloroethane	75-34-3		U	1.00	0.125
1,2-Dichloroethane	107-06-2		U	1.00	0.250
1,1-Dichloroethene	75-35-4		U	1.00	0.500
cis-1,2-Dichloroethene	156-59-2		U	1.00	0.250
trans-1,2-Dichloroethene	156-60-5		U	1.00	0.250
1,2-Dichloropropane	78-87-5		U	1.00	0.200
1,3-Dichloropropane	142-28-9		U	1.00	0.200
2,2-Dichloropropane	594-20-7		U	1.00	0.250
cis-1,3-Dichloropropene	10061-01-5		U	1.00	0.250
trans-1,3-Dichloropropene	10061-02-6		U	1.00	0.500
1,1-Dichloropropene	563-58-6		U	1.00	0.250
Ethylbenzene	100-41-4		U	1.00	0.250
2-Hexanone	591-78-6		U	10.0	2.50
Hexachlorobutadiene	87-68-3		U	1.00	0.250
Isopropylbenzene	98-82-8		U	1.00	0.250
p-Isopropyltoluene	99-87-6		U	1.00	0.250
4-Methyl-2-pentanone	108-10-1		U	10.0	2.50
Methylene chloride	75-09-2	63.4		5.00	0.250
Naphthalene	91-20-3		U	1.00	0.200
n-Propylbenzene	103-65-1		U	1.00	0.125

Sample Number: **L0611537-03**
Client ID: **LAP-29WW37-2ND**
Matrix: **Water**
Workgroup Number: **WG228326**
Collect Date: **11/17/2006 10:50**
Sample Tag: **01**

PrePrep Method: **NONE**
Prep Method: **5030B**
Analytical Method: **8260B**
Analyst: **CMS**
Dilution: **1**
Units: **ug/L**

Instrument: **HPMS8**
Prep Date: **11/28/2006 13:33**
Cal Date: **11/03/2006 21:42**
Run Date: **11/28/2006 13:33**
File ID: **8M332381**

Analyte	CAS. Number	Result	Qual	PQL	SQL
Styrene	100-42-5		U	1.00	0.125
1,1,1,2-Tetrachloroethane	630-20-6		U	1.00	0.250
1,1,2,2-Tetrachloroethane	79-34-5		U	1.00	0.125
Tetrachloroethene	127-18-4		U	1.00	0.250
Toluene	108-88-3		U	1.00	0.250
1,2,3-Trichlorobenzene	87-61-6		U	1.00	0.125
1,2,4-Trichlorobenzene	120-82-1		U	1.00	0.200
1,1,1-Trichloroethane	71-55-6		U	1.00	0.250
1,1,2-Trichloroethane	79-00-5		U	1.00	0.250
Trichloroethene	79-01-6		U	1.00	0.250
Trichlorofluoromethane	75-69-4		U	1.00	0.250
1,2,3-Trichloropropane	96-18-4		U	1.00	0.500
1,2,4-Trimethylbenzene	95-63-6		U	1.00	0.250
1,3,5-Trimethylbenzene	108-67-8		U	1.00	0.250
Vinyl acetate	108-05-4		U	10.0	2.50
Vinyl chloride	75-01-4		U	1.00	0.250
o-Xylene	95-47-6		U	1.00	0.250
m-,p-Xylene	136777-61-2		U	1.00	0.500

Surrogate	% Recovery	Lower	Upper	Qual
Dibromofluoromethane	96.3	86	118	
1,2-Dichloroethane-d4	103	80	120	
Toluene-d8	96.0	88	110	
4-Bromofluorobenzene	93.4	86	115	

U Not detected at or above adjusted sample detection limit

Sample Number: **L0611537-04**
Client ID: **LAP-29WW38-2ND**
Matrix: **Water**
Workgroup Number: **WG228433**
Collect Date: **11/20/2006 14:25**
Sample Tag: **02**

PrePrep Method: **NONE**
Prep Method: **5030B**
Analytical Method: **8260B**
Analyst: **CMS**
Dilution: **1**
Units: **ug/L**

Instrument: **HPMS6**
Prep Date: **11/29/2006 12:20**
Cal Date: **11/20/2006 14:29**
Run Date: **11/29/2006 12:20**
File ID: **6M62278**

Analyte	CAS. Number	Result	Qual	PQL	SQL
Acetone	67-64-1	3.00	J	10.0	2.50
Benzene	71-43-2		U	1.00	0.125
Bromobenzene	108-86-1		U	1.00	0.125
Bromochloromethane	74-97-5		U	1.00	0.200
Bromodichloromethane	75-27-4		U	1.00	0.250
Bromoform	75-25-2		U	1.00	0.500
Bromomethane	74-83-9		U	1.00	0.500
2-Butanone	78-93-3		U	10.0	2.50
n-Butylbenzene	104-51-8		U	1.00	0.250
sec-Butylbenzene	135-98-8		U	1.00	0.250
tert-Butylbenzene	98-06-6		U	1.00	0.250
Carbon disulfide	75-15-0	0.720	J	1.00	0.500
Carbon tetrachloride	56-23-5		U	1.00	0.250
Chlorobenzene	108-90-7		U	1.00	0.125
Chlorodibromomethane	124-48-1		U	1.00	0.250

Report Number: **L0611537**
Report Date : **December 4, 2006**

00095755

Sample Number: **L0611537-04**
Client ID: **LAP-29WW38-2ND**
Matrix: **Water**
Workgroup Number: **WG228433**
Collect Date: **11/20/2006 14:25**
Sample Tag: **02**

PrePrep Method: **NONE**
Prep Method: **5030B**
Analytical Method: **8260B**
Analyst: **CMS**
Dilution: **1**
Units: **ug/L**

Instrument: **HPMS6**
Prep Date: **11/29/2006 12:20**
Cal Date: **11/20/2006 14:29**
Run Date: **11/29/2006 12:20**
File ID: **6M62278**

Analyte	CAS. Number	Result	Qual	PQL	SQL
Chloroethane	75-00-3		U	1.00	0.500
2-Chloroethyl vinyl ether	110-75-8		U	10.0	2.00
Chloroform	67-66-3	0.321	J	1.00	0.125
Chloromethane	74-87-3		U	1.00	0.250
2-Chlorotoluene	95-49-8		U	1.00	0.125
4-Chlorotoluene	106-43-4		U	1.00	0.250
1,2-Dibromo-3-chloropropane	96-12-8		U	5.00	1.00
1,2-Dibromoethane	106-93-4		U	1.00	0.250
Dibromomethane	74-95-3		U	1.00	0.250
1,2-Dichlorobenzene	95-50-1		U	1.00	0.125
1,3-Dichlorobenzene	541-73-1		U	1.00	0.250
1,4-Dichlorobenzene	106-46-7		U	1.00	0.125
Dichlorodifluoromethane	75-71-8		U	1.00	0.250
1,1-Dichloroethane	75-34-3		U	1.00	0.125
1,2-Dichloroethane	107-06-2		U	1.00	0.250
1,1-Dichloroethene	75-35-4		U	1.00	0.500
cis-1,2-Dichloroethene	156-59-2		U	1.00	0.250
trans-1,2-Dichloroethene	156-60-5		U	1.00	0.250
1,2-Dichloropropane	78-87-5		U	1.00	0.200
1,3-Dichloropropane	142-28-9		U	1.00	0.200
2,2-Dichloropropane	594-20-7		U	1.00	0.250
cis-1,3-Dichloropropene	10061-01-5		U	1.00	0.250
trans-1,3-Dichloropropene	10061-02-6		U	1.00	0.500
1,1-Dichloropropene	563-58-6		U	1.00	0.250
Ethylbenzene	100-41-4		U	1.00	0.250
2-Hexanone	591-78-6		U	10.0	2.50
Hexachlorobutadiene	87-68-3		U	1.00	0.250
Isopropylbenzene	98-82-8		U	1.00	0.250
p-Isopropyltoluene	99-87-6		U	1.00	0.250
4-Methyl-2-pentanone	108-10-1		U	10.0	2.50
Methylene chloride	75-09-2	0.568	J	5.00	0.250
Naphthalene	91-20-3		U	1.00	0.200
n-Propylbenzene	103-65-1		U	1.00	0.125
Styrene	100-42-5		U	1.00	0.125
1,1,1,2-Tetrachloroethane	630-20-6		U	1.00	0.250
1,1,2,2-Tetrachloroethane	79-34-5		U	1.00	0.125
Tetrachloroethene	127-18-4		U	1.00	0.250
Toluene	108-88-3		U	1.00	0.250
1,2,3-Trichlorobenzene	87-61-6		U	1.00	0.125
1,2,4-Trichlorobenzene	120-82-1		U	1.00	0.200
1,1,1-Trichloroethane	71-55-6		U	1.00	0.250
1,1,2-Trichloroethane	79-00-5		U	1.00	0.250
Trichloroethene	79-01-6		U	1.00	0.250
Trichlorofluoromethane	75-69-4		U	1.00	0.250
1,2,3-Trichloropropane	96-18-4		U	1.00	0.500
1,2,4-Trimethylbenzene	95-63-6		U	1.00	0.250
1,3,5-Trimethylbenzene	108-67-8		U	1.00	0.250
Vinyl acetate	108-05-4		U	10.0	2.50

Sample Number: **L0611537-04**
Client ID: **LAP-29WW38-2ND**
Matrix: **Water**
Workgroup Number: **WG228433**
Collect Date: **11/20/2006 14:25**
Sample Tag: **02**

PrePrep Method: **NONE**
Prep Method: **5030B**
Analytical Method: **8260B**
Analyst: **CMS**
Dilution: **1**
Units: **ug/L**

Instrument: **HPMS6**
Prep Date: **11/29/2006 12:20**
Cal Date: **11/20/2006 14:29**
Run Date: **11/29/2006 12:20**
File ID: **6M62278**

Analyte	CAS. Number	Result	Qual	PQL	SQL
Vinyl chloride	75-01-4		U	1.00	0.250
o-Xylene	95-47-6		U	1.00	0.250
m-,p-Xylene	136777-61-2		U	1.00	0.500

Surrogate	% Recovery	Lower	Upper	Qual
Dibromofluoromethane	95.6	86	118	
1,2-Dichloroethane-d4	88.0	80	120	
Toluene-d8	99.8	88	110	
4-Bromofluorobenzene	95.2	86	115	

U Not detected at or above adjusted sample detection limit
J The analyte was positively identified, but the quantitation was below the RL

Sample Number: **L0611537-05**
Client ID: **LAP-29WW39-2ND**
Matrix: **Water**
Workgroup Number: **WG228433**
Collect Date: **11/20/2006 13:40**
Sample Tag: **02**

PrePrep Method: **NONE**
Prep Method: **5030B**
Analytical Method: **8260B**
Analyst: **CMS**
Dilution: **1**
Units: **ug/L**

Instrument: **HPMS6**
Prep Date: **11/29/2006 12:53**
Cal Date: **11/20/2006 14:29**
Run Date: **11/29/2006 12:53**
File ID: **6M62279**

Analyte	CAS. Number	Result	Qual	PQL	SQL
Acetone	67-64-1	5.11	J	10.0	2.50
Benzene	71-43-2		U	1.00	0.125
Bromobenzene	108-86-1		U	1.00	0.125
Bromochloromethane	74-97-5		U	1.00	0.200
Bromodichloromethane	75-27-4		U	1.00	0.250
Bromoform	75-25-2		U	1.00	0.500
Bromomethane	74-83-9		U	1.00	0.500
2-Butanone	78-93-3		U	10.0	2.50
n-Butylbenzene	104-51-8		U	1.00	0.250
sec-Butylbenzene	135-98-8		U	1.00	0.250
tert-Butylbenzene	98-06-6		U	1.00	0.250
Carbon disulfide	75-15-0		U	1.00	0.500
Carbon tetrachloride	56-23-5		U	1.00	0.250
Chlorobenzene	108-90-7		U	1.00	0.125
Chlorodibromomethane	124-48-1		U	1.00	0.250
Chloroethane	75-00-3		U	1.00	0.500
2-Chloroethyl vinyl ether	110-75-8		U	10.0	2.00
Chloroform	67-66-3	0.179	J	1.00	0.125
Chloromethane	74-87-3		U	1.00	0.250
2-Chlorotoluene	95-49-8		U	1.00	0.125
4-Chlorotoluene	106-43-4		U	1.00	0.250
1,2-Dibromo-3-chloropropane	96-12-8		U	5.00	1.00
1,2-Dibromoethane	106-93-4		U	1.00	0.250
Dibromomethane	74-95-3		U	1.00	0.250
1,2-Dichlorobenzene	95-50-1		U	1.00	0.125
1,3-Dichlorobenzene	541-73-1		U	1.00	0.250
1,4-Dichlorobenzene	106-46-7		U	1.00	0.125
Dichlorodifluoromethane	75-71-8		U	1.00	0.250
1,1-Dichloroethane	75-34-3		U	1.00	0.125

Report Number: **L0611537**
Report Date : **December 4, 2006**

00095757

Sample Number: **L0611537-05**
Client ID: **LAP-29WW39-2ND**
Matrix: **Water**
Workgroup Number: **WG228433**
Collect Date: **11/20/2006 13:40**
Sample Tag: **02**

PrePrep Method: **NONE**
Prep Method: **5030B**
Analytical Method: **8260B**
Analyst: **CMS**
Dilution: **1**
Units: **ug/L**

Instrument: **HPMS6**
Prep Date: **11/29/2006 12:53**
Cal Date: **11/20/2006 14:29**
Run Date: **11/29/2006 12:53**
File ID: **6M62279**

Analyte	CAS. Number	Result	Qual	PQL	SQL
1,2-Dichloroethane	107-06-2		U	1.00	0.250
1,1-Dichloroethene	75-35-4		U	1.00	0.500
cis-1,2-Dichloroethene	156-59-2		U	1.00	0.250
trans-1,2-Dichloroethene	156-60-5		U	1.00	0.250
1,2-Dichloropropane	78-87-5		U	1.00	0.200
1,3-Dichloropropane	142-28-9		U	1.00	0.200
2,2-Dichloropropane	594-20-7		U	1.00	0.250
cis-1,3-Dichloropropene	10061-01-5		U	1.00	0.250
trans-1,3-Dichloropropene	10061-02-6		U	1.00	0.500
1,1-Dichloropropene	563-58-6		U	1.00	0.250
Ethylbenzene	100-41-4		U	1.00	0.250
2-Hexanone	591-78-6		U	10.0	2.50
Hexachlorobutadiene	87-68-3		U	1.00	0.250
Isopropylbenzene	98-82-8		U	1.00	0.250
p-Isopropyltoluene	99-87-6		U	1.00	0.250
4-Methyl-2-pentanone	108-10-1		U	10.0	2.50
Methylene chloride	75-09-2	1.82	J	5.00	0.250
Naphthalene	91-20-3		U	1.00	0.200
n-Propylbenzene	103-65-1		U	1.00	0.125
Styrene	100-42-5		U	1.00	0.125
1,1,1,2-Tetrachloroethane	630-20-6		U	1.00	0.250
1,1,2,2-Tetrachloroethane	79-34-5		U	1.00	0.125
Tetrachloroethene	127-18-4		U	1.00	0.250
Toluene	108-88-3		U	1.00	0.250
1,2,3-Trichlorobenzene	87-61-6		U	1.00	0.125
1,2,4-Trichlorobenzene	120-82-1		U	1.00	0.200
1,1,1-Trichloroethane	71-55-6		U	1.00	0.250
1,1,2-Trichloroethane	79-00-5		U	1.00	0.250
Trichloroethene	79-01-6		U	1.00	0.250
Trichlorofluoromethane	75-69-4		U	1.00	0.250
1,2,3-Trichloropropane	96-18-4		U	1.00	0.500
1,2,4-Trimethylbenzene	95-63-6		U	1.00	0.250
1,3,5-Trimethylbenzene	108-67-8		U	1.00	0.250
Vinyl acetate	108-05-4		U	10.0	2.50
Vinyl chloride	75-01-4		U	1.00	0.250
o-Xylene	95-47-6		U	1.00	0.250
m-,p-Xylene	136777-61-2		U	1.00	0.500

Surrogate	% Recovery	Lower	Upper	Qual
Dibromofluoromethane	95.4	86	118	
1,2-Dichloroethane-d4	89.5	80	120	
Toluene-d8	99.4	88	110	
4-Bromofluorobenzene	96.1	86	115	

U Not detected at or above adjusted sample detection limit
J The analyte was positively identified, but the quantitation was below the RL

Report Number: **L0611537**
Report Date : **December 4, 2006**

00095758

Sample Number: **L0611537-06**
Client ID: **LAP-29WW40-2ND**
Matrix: **Water**
Workgroup Number: **WG228326**
Collect Date: **11/21/2006 09:50**
Sample Tag: **01**

PrePrep Method: **NONE**
Prep Method: **5030B**
Analytical Method: **8260B**
Analyst: **CMS**
Dilution: **1**
Units: **ug/L**

Instrument: **HPMS8**
Prep Date: **11/28/2006 10:31**
Cal Date: **11/03/2006 21:42**
Run Date: **11/28/2006 10:31**
File ID: **8M332375**

Analyte	CAS. Number	Result	Qual	PQL	SQL
Acetone	67-64-1		U	10.0	2.50
Benzene	71-43-2		U	1.00	0.125
Bromobenzene	108-86-1		U	1.00	0.125
Bromochloromethane	74-97-5		U	1.00	0.200
Bromodichloromethane	75-27-4		U	1.00	0.250
Bromoform	75-25-2		U	1.00	0.500
Bromomethane	74-83-9		U	1.00	0.500
2-Butanone	78-93-3		U	10.0	2.50
n-Butylbenzene	104-51-8		U	1.00	0.250
sec-Butylbenzene	135-98-8		U	1.00	0.250
tert-Butylbenzene	98-06-6		U	1.00	0.250
Carbon disulfide	75-15-0	1.54		1.00	0.500
Carbon tetrachloride	56-23-5		U	1.00	0.250
Chlorobenzene	108-90-7		U	1.00	0.125
Chlorodibromomethane	124-48-1		U	1.00	0.250
Chloroethane	75-00-3		U	1.00	0.500
2-Chloroethyl vinyl ether	110-75-8		U	10.0	2.00
Chloroform	67-66-3		U	1.00	0.125
Chloromethane	74-87-3		U	1.00	0.250
2-Chlorotoluene	95-49-8		U	1.00	0.125
4-Chlorotoluene	106-43-4		U	1.00	0.250
1,2-Dibromo-3-chloropropane	96-12-8		U	5.00	1.00
1,2-Dibromoethane	106-93-4		U	1.00	0.250
Dibromomethane	74-95-3		U	1.00	0.250
1,2-Dichlorobenzene	95-50-1		U	1.00	0.125
1,3-Dichlorobenzene	541-73-1		U	1.00	0.250
1,4-Dichlorobenzene	106-46-7		U	1.00	0.125
Dichlorodifluoromethane	75-71-8		U	1.00	0.250
1,1-Dichloroethane	75-34-3		U	1.00	0.125
1,2-Dichloroethane	107-06-2		U	1.00	0.250
1,1-Dichloroethene	75-35-4		U	1.00	0.500
cis-1,2-Dichloroethene	156-59-2		U	1.00	0.250
trans-1,2-Dichloroethene	156-60-5		U	1.00	0.250
1,2-Dichloropropane	78-87-5		U	1.00	0.200
1,3-Dichloropropane	142-28-9		U	1.00	0.200
2,2-Dichloropropane	594-20-7		U	1.00	0.250
cis-1,3-Dichloropropene	10061-01-5		U	1.00	0.250
trans-1,3-Dichloropropene	10061-02-6		U	1.00	0.500
1,1-Dichloropropene	563-58-6		U	1.00	0.250
Ethylbenzene	100-41-4		U	1.00	0.250
2-Hexanone	591-78-6		U	10.0	2.50
Hexachlorobutadiene	87-68-3		U	1.00	0.250
Isopropylbenzene	98-82-8		U	1.00	0.250
p-Isopropyltoluene	99-87-6		U	1.00	0.250
4-Methyl-2-pentanone	108-10-1		U	10.0	2.50
Methylene chloride	75-09-2	6.79		5.00	0.250
Naphthalene	91-20-3		U	1.00	0.200
n-Propylbenzene	103-65-1		U	1.00	0.125

Sample Number: **L0611537-06**
Client ID: **LAP-29WW40-2ND**
Matrix: **Water**
Workgroup Number: **WG228326**
Collect Date: **11/21/2006 09:50**
Sample Tag: **01**

PrePrep Method: **NONE**
Prep Method: **5030B**
Analytical Method: **8260B**
Analyst: **CMS**
Dilution: **1**
Units: **ug/L**

Instrument: **HPMS8**
Prep Date: **11/28/2006 10:31**
Cal Date: **11/03/2006 21:42**
Run Date: **11/28/2006 10:31**
File ID: **8M332375**

Analyte	CAS. Number	Result	Qual	PQL	SQL
Styrene	100-42-5		U	1.00	0.125
1,1,1,2-Tetrachloroethane	630-20-6		U	1.00	0.250
1,1,2,2-Tetrachloroethane	79-34-5		U	1.00	0.125
Tetrachloroethene	127-18-4		U	1.00	0.250
Toluene	108-88-3		U	1.00	0.250
1,2,3-Trichlorobenzene	87-61-6		U	1.00	0.125
1,2,4-Trichlorobenzene	120-82-1		U	1.00	0.200
1,1,1-Trichloroethane	71-55-6		U	1.00	0.250
1,1,2-Trichloroethane	79-00-5		U	1.00	0.250
Trichloroethene	79-01-6		U	1.00	0.250
Trichlorofluoromethane	75-69-4		U	1.00	0.250
1,2,3-Trichloropropane	96-18-4		U	1.00	0.500
1,2,4-Trimethylbenzene	95-63-6		U	1.00	0.250
1,3,5-Trimethylbenzene	108-67-8		U	1.00	0.250
Vinyl acetate	108-05-4		U	10.0	2.50
Vinyl chloride	75-01-4		U	1.00	0.250
o-Xylene	95-47-6		U	1.00	0.250
m-,p-Xylene	136777-61-2		U	1.00	0.500

Surrogate	% Recovery	Lower	Upper	Qual
Dibromofluoromethane	96.3	86	118	
1,2-Dichloroethane-d4	105	80	120	
Toluene-d8	95.5	88	110	
4-Bromofluorobenzene	91.4	86	115	

U Not detected at or above adjusted sample detection limit

Sample Number: **L0611537-07**
Client ID: **LAP-29WW40-2ND DUP**
Matrix: **Water**
Workgroup Number: **WG228326**
Collect Date: **11/21/2006 09:50**
Sample Tag: **01**

PrePrep Method: **NONE**
Prep Method: **5030B**
Analytical Method: **8260B**
Analyst: **CMS**
Dilution: **1**
Units: **ug/L**

Instrument: **HPMS8**
Prep Date: **11/28/2006 12:03**
Cal Date: **11/03/2006 21:42**
Run Date: **11/28/2006 12:03**
File ID: **8M332378**

Analyte	CAS. Number	Result	Qual	PQL	SQL
Acetone	67-64-1		U	10.0	2.50
Benzene	71-43-2		U	1.00	0.125
Bromobenzene	108-86-1		U	1.00	0.125
Bromochloromethane	74-97-5		U	1.00	0.200
Bromodichloromethane	75-27-4		U	1.00	0.250
Bromoform	75-25-2		U	1.00	0.500
Bromomethane	74-83-9		U	1.00	0.500
2-Butanone	78-93-3		U	10.0	2.50
n-Butylbenzene	104-51-8		U	1.00	0.250
sec-Butylbenzene	135-98-8		U	1.00	0.250
tert-Butylbenzene	98-06-6		U	1.00	0.250
Carbon disulfide	75-15-0	1.89		1.00	0.500
Carbon tetrachloride	56-23-5		U	1.00	0.250
Chlorobenzene	108-90-7		U	1.00	0.125
Chlorodibromomethane	124-48-1		U	1.00	0.250

Report Number: **L0611537**
Report Date : **December 4, 2006**

00095760

Sample Number: **L0611537-07**
Client ID: **LAP-29WW40-2ND DUP**
Matrix: **Water**
Workgroup Number: **WG228326**
Collect Date: **11/21/2006 09:50**
Sample Tag: **01**

PrePrep Method: **NONE**
Prep Method: **5030B**
Analytical Method: **8260B**
Analyst: **CMS**
Dilution: **1**
Units: **ug/L**

Instrument: **HPMS8**
Prep Date: **11/28/2006 12:03**
Cal Date: **11/03/2006 21:42**
Run Date: **11/28/2006 12:03**
File ID: **8M332378**

Analyte	CAS. Number	Result	Qual	PQL	SQL
Chloroethane	75-00-3		U	1.00	0.500
2-Chloroethyl vinyl ether	110-75-8		U	10.0	2.00
Chloroform	67-66-3		U	1.00	0.125
Chloromethane	74-87-3		U	1.00	0.250
2-Chlorotoluene	95-49-8		U	1.00	0.125
4-Chlorotoluene	106-43-4		U	1.00	0.250
1,2-Dibromo-3-chloropropane	96-12-8		U	5.00	1.00
1,2-Dibromoethane	106-93-4		U	1.00	0.250
Dibromomethane	74-95-3		U	1.00	0.250
1,2-Dichlorobenzene	95-50-1		U	1.00	0.125
1,3-Dichlorobenzene	541-73-1		U	1.00	0.250
1,4-Dichlorobenzene	106-46-7		U	1.00	0.125
Dichlorodifluoromethane	75-71-8		U	1.00	0.250
1,1-Dichloroethane	75-34-3		U	1.00	0.125
1,2-Dichloroethane	107-06-2		U	1.00	0.250
1,1-Dichloroethene	75-35-4		U	1.00	0.500
cis-1,2-Dichloroethene	156-59-2		U	1.00	0.250
trans-1,2-Dichloroethene	156-60-5		U	1.00	0.250
1,2-Dichloropropane	78-87-5		U	1.00	0.200
1,3-Dichloropropane	142-28-9		U	1.00	0.200
2,2-Dichloropropane	594-20-7		U	1.00	0.250
cis-1,3-Dichloropropene	10061-01-5		U	1.00	0.250
trans-1,3-Dichloropropene	10061-02-6		U	1.00	0.500
1,1-Dichloropropene	563-58-6		U	1.00	0.250
Ethylbenzene	100-41-4		U	1.00	0.250
2-Hexanone	591-78-6		U	10.0	2.50
Hexachlorobutadiene	87-68-3	0.272	J	1.00	0.250
Isopropylbenzene	98-82-8		U	1.00	0.250
p-Isopropyltoluene	99-87-6		U	1.00	0.250
4-Methyl-2-pentanone	108-10-1		U	10.0	2.50
Methylene chloride	75-09-2	6.75		5.00	0.250
Naphthalene	91-20-3		U	1.00	0.200
n-Propylbenzene	103-65-1		U	1.00	0.125
Styrene	100-42-5		U	1.00	0.125
1,1,1,2-Tetrachloroethane	630-20-6		U	1.00	0.250
1,1,2,2-Tetrachloroethane	79-34-5		U	1.00	0.125
Tetrachloroethene	127-18-4		U	1.00	0.250
Toluene	108-88-3		U	1.00	0.250
1,2,3-Trichlorobenzene	87-61-6	0.164	J	1.00	0.125
1,2,4-Trichlorobenzene	120-82-1		U	1.00	0.200
1,1,1-Trichloroethane	71-55-6		U	1.00	0.250
1,1,2-Trichloroethane	79-00-5		U	1.00	0.250
Trichloroethene	79-01-6		U	1.00	0.250
Trichlorofluoromethane	75-69-4		U	1.00	0.250
1,2,3-Trichloropropane	96-18-4		U	1.00	0.500
1,2,4-Trimethylbenzene	95-63-6		U	1.00	0.250
1,3,5-Trimethylbenzene	108-67-8		U	1.00	0.250
Vinyl acetate	108-05-4		U	10.0	2.50

Report Number: **L0611537**
Report Date : **December 4, 2006**

00095761

Sample Number: **L0611537-07**
Client ID: **LAP-29WW40-2ND DUP**
Matrix: **Water**
Workgroup Number: **WG228326**
Collect Date: **11/21/2006 09:50**
Sample Tag: **01**

PrePrep Method: **NONE**
Prep Method: **5030B**
Analytical Method: **8260B**
Analyst: **CMS**
Dilution: **1**
Units: **ug/L**

Instrument: **HPMS8**
Prep Date: **11/28/2006 12:03**
Cal Date: **11/03/2006 21:42**
Run Date: **11/28/2006 12:03**
File ID: **8M332378**

Analyte	CAS. Number	Result	Qual	PQL	SQL
Vinyl chloride	75-01-4		U	1.00	0.250
o-Xylene	95-47-6		U	1.00	0.250
m-,p-Xylene	136777-61-2		U	1.00	0.500

Surrogate	% Recovery	Lower	Upper	Qual
Dibromofluoromethane	95.0	86	118	
1,2-Dichloroethane-d4	99.7	80	120	
Toluene-d8	97.0	88	110	
4-Bromofluorobenzene	93.2	86	115	

U Not detected at or above adjusted sample detection limit
J The analyte was positively identified, but the quantitation was below the RL

Sample Number: **L0611537-08**
Client ID: **LAP-29WW40-2ND MS**
Matrix: **Water**
Workgroup Number: **WG228326**
Collect Date: **11/21/2006 09:50**
Sample Tag: **01**

PrePrep Method: **NONE**
Prep Method: **5030B**
Analytical Method: **8260B**
Analyst: **CMS**
Dilution: **1**
Units: **ug/L**

Instrument: **HPMS8**
Prep Date: **11/28/2006 11:02**
Cal Date: **11/03/2006 21:42**
Run Date: **11/28/2006 11:02**
File ID: **8M332376**

Analyte	CAS. Number	Result	Qual	PQL	SQL
Acetone	67-64-1	22.3		10.0	2.50
Benzene	71-43-2	21.0		1.00	0.125
Bromobenzene	108-86-1	20.7		1.00	0.125
Bromochloromethane	74-97-5	22.8		1.00	0.200
Bromodichloromethane	75-27-4	25.5		1.00	0.250
Bromoform	75-25-2	22.1		1.00	0.500
Bromomethane	74-83-9	20.5		1.00	0.500
2-Butanone	78-93-3	20.7		10.0	2.50
n-Butylbenzene	104-51-8	20.4		1.00	0.250
sec-Butylbenzene	135-98-8	20.4		1.00	0.250
tert-Butylbenzene	98-06-6	19.3		1.00	0.250
Carbon disulfide	75-15-0	22.1		1.00	0.500
Carbon tetrachloride	56-23-5	25.2		1.00	0.250
Chlorobenzene	108-90-7	21.4		1.00	0.125
Chlorodibromomethane	124-48-1	23.5		1.00	0.250
Chloroethane	75-00-3	19.0		1.00	0.500
2-Chloroethyl vinyl ether	110-75-8		U	10.0	2.00
Chloroform	67-66-3	23.6		1.00	0.125
Chloromethane	74-87-3	25.7		1.00	0.250
2-Chlorotoluene	95-49-8	20.2		1.00	0.125
4-Chlorotoluene	106-43-4	22.0		1.00	0.250
1,2-Dibromo-3-chloropropane	96-12-8	20.6		5.00	1.00
1,2-Dibromoethane	106-93-4	21.6		1.00	0.250
Dibromomethane	74-95-3	24.3		1.00	0.250
1,2-Dichlorobenzene	95-50-1	19.8		1.00	0.125
1,3-Dichlorobenzene	541-73-1	20.2		1.00	0.250
1,4-Dichlorobenzene	106-46-7	19.5		1.00	0.125
Dichlorodifluoromethane	75-71-8	19.9		1.00	0.250
1,1-Dichloroethane	75-34-3	22.2		1.00	0.125

Report Number: **L0611537**
Report Date : **December 4, 2006**

00095762

Sample Number: **L0611537-08**
Client ID: **LAP-29WW40-2ND MS**
Matrix: **Water**
Workgroup Number: **WG228326**
Collect Date: **11/21/2006 09:50**
Sample Tag: **01**

PrePrep Method: **NONE**
Prep Method: **5030B**
Analytical Method: **8260B**
Analyst: **CMS**
Dilution: **1**
Units: **ug/L**

Instrument: **HPMS8**
Prep Date: **11/28/2006 11:02**
Cal Date: **11/03/2006 21:42**
Run Date: **11/28/2006 11:02**
File ID: **8M332376**

Analyte	CAS. Number	Result	Qual	PQL	SQL
1,2-Dichloroethane	107-06-2	25.4		1.00	0.250
1,1-Dichloroethene	75-35-4	22.9		1.00	0.500
cis-1,2-Dichloroethene	156-59-2	21.5		1.00	0.250
trans-1,2-Dichloroethene	156-60-5	21.7		1.00	0.250
1,2-Dichloropropane	78-87-5	20.9		1.00	0.200
1,3-Dichloropropane	142-28-9	21.3		1.00	0.200
2,2-Dichloropropane	594-20-7	25.4		1.00	0.250
cis-1,3-Dichloropropene	10061-01-5	23.0		1.00	0.250
trans-1,3-Dichloropropene	10061-02-6	20.7		1.00	0.500
1,1-Dichloropropene	563-58-6	22.7		1.00	0.250
Ethylbenzene	100-41-4	21.0		1.00	0.250
2-Hexanone	591-78-6	17.8		10.0	2.50
Hexachlorobutadiene	87-68-3	23.3		1.00	0.250
Isopropylbenzene	98-82-8	20.0		1.00	0.250
p-Isopropyltoluene	99-87-6	20.3		1.00	0.250
4-Methyl-2-pentanone	108-10-1	19.1		10.0	2.50
Methylene chloride	75-09-2	26.0		5.00	0.250
Naphthalene	91-20-3	18.9		1.00	0.200
n-Propylbenzene	103-65-1	20.7		1.00	0.125
Styrene	100-42-5	22.1		1.00	0.125
1,1,1,2-Tetrachloroethane	630-20-6	23.1		1.00	0.250
1,1,2,2-Tetrachloroethane	79-34-5	19.1		1.00	0.125
Tetrachloroethene	127-18-4	22.1		1.00	0.250
Toluene	108-88-3	21.0		1.00	0.250
1,2,3-Trichlorobenzene	87-61-6	18.6		1.00	0.125
1,2,4-Trichlorobenzene	120-82-1	19.2		1.00	0.200
1,1,1-Trichloroethane	71-55-6	25.0		1.00	0.250
1,1,2-Trichloroethane	79-00-5	22.0		1.00	0.250
Trichloroethene	79-01-6	21.8		1.00	0.250
Trichlorofluoromethane	75-69-4	22.4		1.00	0.250
1,2,3-Trichloropropane	96-18-4	20.7		1.00	0.500
1,2,4-Trimethylbenzene	95-63-6	21.0		1.00	0.250
1,3,5-Trimethylbenzene	108-67-8	21.3		1.00	0.250
Vinyl acetate	108-05-4	21.2		10.0	2.50
Vinyl chloride	75-01-4	24.0		1.00	0.250
o-Xylene	95-47-6	20.8		1.00	0.250
m-,p-Xylene	136777-61-2	42.7		1.00	0.500

Surrogate	% Recovery	Lower	Upper	Qual
Dibromofluoromethane	96.3	86	118	
1,2-Dichloroethane-d4	102	80	120	
Toluene-d8	95.0	88	110	
4-Bromofluorobenzene	90.6	86	115	

U Not detected at or above adjusted sample detection limit

Report Number: **L0611537**
Report Date : **December 4, 2006**

00095763

Sample Number: **L0611537-09**
Client ID: **LAP-29WW40-2ND MSD**
Matrix: **Water**
Workgroup Number: **WG228326**
Collect Date: **11/21/2006 09:50**
Sample Tag: **01**

PrePrep Method: **NONE**
Prep Method: **5030B**
Analytical Method: **8260B**
Analyst: **CMS**
Dilution: **1**
Units: **ug/L**

Instrument: **HPMS8**
Prep Date: **11/28/2006 11:32**
Cal Date: **11/03/2006 21:42**
Run Date: **11/28/2006 11:32**
File ID: **8M332377**

Analyte	CAS. Number	Result	Qual	PQL	SQL
Acetone	67-64-1	23.7		10.0	2.50
Benzene	71-43-2	20.8		1.00	0.125
Bromobenzene	108-86-1	20.1		1.00	0.125
Bromochloromethane	74-97-5	22.2		1.00	0.200
Bromodichloromethane	75-27-4	24.9		1.00	0.250
Bromoform	75-25-2	22.4		1.00	0.500
Bromomethane	74-83-9	20.3		1.00	0.500
2-Butanone	78-93-3	21.6		10.0	2.50
n-Butylbenzene	104-51-8	19.9		1.00	0.250
sec-Butylbenzene	135-98-8	19.9		1.00	0.250
tert-Butylbenzene	98-06-6	19.0		1.00	0.250
Carbon disulfide	75-15-0	22.2		1.00	0.500
Carbon tetrachloride	56-23-5	24.6		1.00	0.250
Chlorobenzene	108-90-7	20.8		1.00	0.125
Chlorodibromomethane	124-48-1	23.3		1.00	0.250
Chloroethane	75-00-3	18.8		1.00	0.500
2-Chloroethyl vinyl ether	110-75-8		U	10.0	2.00
Chloroform	67-66-3	22.6		1.00	0.125
Chloromethane	74-87-3	25.2		1.00	0.250
2-Chlorotoluene	95-49-8	20.1		1.00	0.125
4-Chlorotoluene	106-43-4	20.6		1.00	0.250
1,2-Dibromo-3-chloropropane	96-12-8	20.3		5.00	1.00
1,2-Dibromoethane	106-93-4	21.6		1.00	0.250
Dibromomethane	74-95-3	23.2		1.00	0.250
1,2-Dichlorobenzene	95-50-1	19.3		1.00	0.125
1,3-Dichlorobenzene	541-73-1	19.7		1.00	0.250
1,4-Dichlorobenzene	106-46-7	19.1		1.00	0.125
Dichlorodifluoromethane	75-71-8	19.3		1.00	0.250
1,1-Dichloroethane	75-34-3	21.7		1.00	0.125
1,2-Dichloroethane	107-06-2	24.8		1.00	0.250
1,1-Dichloroethene	75-35-4	22.6		1.00	0.500
cis-1,2-Dichloroethene	156-59-2	23.4		1.00	0.250
trans-1,2-Dichloroethene	156-60-5	21.3		1.00	0.250
1,2-Dichloropropane	78-87-5	21.2		1.00	0.200
1,3-Dichloropropane	142-28-9	21.0		1.00	0.200
2,2-Dichloropropane	594-20-7	24.3		1.00	0.250
cis-1,3-Dichloropropene	10061-01-5	22.4		1.00	0.250
trans-1,3-Dichloropropene	10061-02-6	20.3		1.00	0.500
1,1-Dichloropropene	563-58-6	22.5		1.00	0.250
Ethylbenzene	100-41-4	20.6		1.00	0.250
2-Hexanone	591-78-6	18.7		10.0	2.50
Hexachlorobutadiene	87-68-3	24.2		1.00	0.250
Isopropylbenzene	98-82-8	19.6		1.00	0.250
p-Isopropyltoluene	99-87-6	19.7		1.00	0.250
4-Methyl-2-pentanone	108-10-1	19.6		10.0	2.50
Methylene chloride	75-09-2	26.1		5.00	0.250
Naphthalene	91-20-3	18.9		1.00	0.200
n-Propylbenzene	103-65-1	20.0		1.00	0.125

Sample Number: **L0611537-09**
Client ID: **LAP-29WW40-2ND MSD**
Matrix: **Water**
Workgroup Number: **WG228326**
Collect Date: **11/21/2006 09:50**
Sample Tag: **01**

PrePrep Method: **NONE**
Prep Method: **5030B**
Analytical Method: **8260B**
Analyst: **CMS**
Dilution: **1**
Units: **ug/L**

Instrument: **HPMS8**
Prep Date: **11/28/2006 11:32**
Cal Date: **11/03/2006 21:42**
Run Date: **11/28/2006 11:32**
File ID: **8M332377**

Analyte	CAS. Number	Result	Qual	PQL	SQL
Styrene	100-42-5	21.8		1.00	0.125
1,1,1,2-Tetrachloroethane	630-20-6	22.5		1.00	0.250
1,1,2,2-Tetrachloroethane	79-34-5	19.1		1.00	0.125
Tetrachloroethene	127-18-4	21.3		1.00	0.250
Toluene	108-88-3	20.4		1.00	0.250
1,2,3-Trichlorobenzene	87-61-6	18.0		1.00	0.125
1,2,4-Trichlorobenzene	120-82-1	19.0		1.00	0.200
1,1,1-Trichloroethane	71-55-6	24.0		1.00	0.250
1,1,2-Trichloroethane	79-00-5	21.6		1.00	0.250
Trichloroethene	79-01-6	21.6		1.00	0.250
Trichlorofluoromethane	75-69-4	21.6		1.00	0.250
1,2,3-Trichloropropane	96-18-4	20.2		1.00	0.500
1,2,4-Trimethylbenzene	95-63-6	20.3		1.00	0.250
1,3,5-Trimethylbenzene	108-67-8	20.5		1.00	0.250
Vinyl acetate	108-05-4	21.1		10.0	2.50
Vinyl chloride	75-01-4	23.1		1.00	0.250
o-Xylene	95-47-6	20.5		1.00	0.250
m-,p-Xylene	136777-61-2	41.6		1.00	0.500

Surrogate	% Recovery	Lower	Upper	Qual
Dibromofluoromethane	96.8	86	118	
1,2-Dichloroethane-d4	101	80	120	
Toluene-d8	94.3	88	110	
4-Bromofluorobenzene	90.0	86	115	

U Not detected at or above adjusted sample detection limit

Sample Number: **L0611537-10**
Client ID: **TRIP BLANK**
Matrix: **Water**
Workgroup Number: **WG228326**
Collect Date: **11/21/2006 00:01**
Sample Tag: **01**

PrePrep Method: **NONE**
Prep Method: **5030B**
Analytical Method: **8260B**
Analyst: **CMS**
Dilution: **1**
Units: **ug/L**

Instrument: **HPMS8**
Prep Date: **11/28/2006 10:02**
Cal Date: **11/03/2006 21:42**
Run Date: **11/28/2006 10:02**
File ID: **8M332374**

Analyte	CAS. Number	Result	Qual	PQL	SQL
Acetone	67-64-1		U	10.0	2.50
Benzene	71-43-2		U	1.00	0.125
Bromobenzene	108-86-1		U	1.00	0.125
Bromochloromethane	74-97-5		U	1.00	0.200
Bromodichloromethane	75-27-4		U	1.00	0.250
Bromoform	75-25-2		U	1.00	0.500
Bromomethane	74-83-9		U	1.00	0.500
2-Butanone	78-93-3		U	10.0	2.50
n-Butylbenzene	104-51-8		U	1.00	0.250
sec-Butylbenzene	135-98-8		U	1.00	0.250
tert-Butylbenzene	98-06-6		U	1.00	0.250
Carbon disulfide	75-15-0		U	1.00	0.500
Carbon tetrachloride	56-23-5		U	1.00	0.250
Chlorobenzene	108-90-7		U	1.00	0.125
Chlorodibromomethane	124-48-1		U	1.00	0.250

Report Number: **L0611537**
Report Date : **December 4, 2006**

00095765

Sample Number: **L0611537-10**
Client ID: **TRIP BLANK**
Matrix: **Water**
Workgroup Number: **WG228326**
Collect Date: **11/21/2006 00:01**
Sample Tag: **01**

PrePrep Method: **NONE**
Prep Method: **5030B**
Analytical Method: **8260B**
Analyst: **CMS**
Dilution: **1**
Units: **ug/L**

Instrument: **HPMS8**
Prep Date: **11/28/2006 10:02**
Cal Date: **11/03/2006 21:42**
Run Date: **11/28/2006 10:02**
File ID: **8M332374**

Analyte	CAS. Number	Result	Qual	PQL	SQL
Chloroethane	75-00-3		U	1.00	0.500
2-Chloroethyl vinyl ether	110-75-8		U	10.0	2.00
Chloroform	67-66-3		U	1.00	0.125
Chloromethane	74-87-3		U	1.00	0.250
2-Chlorotoluene	95-49-8		U	1.00	0.125
4-Chlorotoluene	106-43-4		U	1.00	0.250
1,2-Dibromo-3-chloropropane	96-12-8		U	5.00	1.00
1,2-Dibromoethane	106-93-4		U	1.00	0.250
Dibromomethane	74-95-3		U	1.00	0.250
1,2-Dichlorobenzene	95-50-1		U	1.00	0.125
1,3-Dichlorobenzene	541-73-1		U	1.00	0.250
1,4-Dichlorobenzene	106-46-7		U	1.00	0.125
Dichlorodifluoromethane	75-71-8		U	1.00	0.250
1,1-Dichloroethane	75-34-3		U	1.00	0.125
1,2-Dichloroethane	107-06-2		U	1.00	0.250
1,1-Dichloroethene	75-35-4		U	1.00	0.500
cis-1,2-Dichloroethene	156-59-2		U	1.00	0.250
trans-1,2-Dichloroethene	156-60-5		U	1.00	0.250
1,2-Dichloropropane	78-87-5		U	1.00	0.200
1,3-Dichloropropane	142-28-9		U	1.00	0.200
2,2-Dichloropropane	594-20-7		U	1.00	0.250
cis-1,3-Dichloropropene	10061-01-5		U	1.00	0.250
trans-1,3-Dichloropropene	10061-02-6		U	1.00	0.500
1,1-Dichloropropene	563-58-6		U	1.00	0.250
Ethylbenzene	100-41-4		U	1.00	0.250
2-Hexanone	591-78-6		U	10.0	2.50
Hexachlorobutadiene	87-68-3		U	1.00	0.250
Isopropylbenzene	98-82-8		U	1.00	0.250
p-Isopropyltoluene	99-87-6		U	1.00	0.250
4-Methyl-2-pentanone	108-10-1		U	10.0	2.50
Methylene chloride	75-09-2		U	5.00	0.250
Naphthalene	91-20-3		U	1.00	0.200
n-Propylbenzene	103-65-1		U	1.00	0.125
Styrene	100-42-5		U	1.00	0.125
1,1,1,2-Tetrachloroethane	630-20-6		U	1.00	0.250
1,1,2,2-Tetrachloroethane	79-34-5		U	1.00	0.125
Tetrachloroethene	127-18-4		U	1.00	0.250
Toluene	108-88-3		U	1.00	0.250
1,2,3-Trichlorobenzene	87-61-6		U	1.00	0.125
1,2,4-Trichlorobenzene	120-82-1		U	1.00	0.200
1,1,1-Trichloroethane	71-55-6		U	1.00	0.250
1,1,2-Trichloroethane	79-00-5		U	1.00	0.250
Trichloroethene	79-01-6		U	1.00	0.250
Trichlorofluoromethane	75-69-4		U	1.00	0.250
1,2,3-Trichloropropane	96-18-4		U	1.00	0.500
1,2,4-Trimethylbenzene	95-63-6		U	1.00	0.250
1,3,5-Trimethylbenzene	108-67-8		U	1.00	0.250
Vinyl acetate	108-05-4		U	10.0	2.50

Report Number: **L0611537**
Report Date : **December 4, 2006**

00095766

Sample Number: **L0611537-10**
Client ID: **TRIP BLANK**
Matrix: **Water**
Workgroup Number: **WG228326**
Collect Date: **11/21/2006 00:01**
Sample Tag: **01**

PrePrep Method: **NONE**
Prep Method: **5030B**
Analytical Method: **8260B**
Analyst: **CMS**
Dilution: **1**
Units: **ug/L**

Instrument: **HPMS8**
Prep Date: **11/28/2006 10:02**
Cal Date: **11/03/2006 21:42**
Run Date: **11/28/2006 10:02**
File ID: **8M332374**

Analyte	CAS. Number	Result	Qual	PQL	SQL
Vinyl chloride	75-01-4		U	1.00	0.250
o-Xylene	95-47-6		U	1.00	0.250
m-,p-Xylene	136777-61-2		U	1.00	0.500

Surrogate	% Recovery	Lower	Upper	Qual
Dibromofluoromethane	96.3	86	118	
1,2-Dichloroethane-d4	102	80	120	
Toluene-d8	96.8	88	110	
4-Bromofluorobenzene	92.8	86	115	

U Not detected at or above adjusted sample detection limit

WORKGROUP SUMMARY BY METHOD

Analysis: Volatile Organics
Analytical Method: 8260B
Workgroup: WG228326

Lab ID	Client ID	Tclp Date	Prep Date	Analysis Date	Tag	Inst Id	Analyst
L0611537-01	LAP-29WW35-2ND			11/28/06 12:33	01	HPMS8	CMS
L0611537-03	LAP-29WW37-2ND			11/28/06 13:33	01	HPMS8	CMS
L0611537-06	LAP-29WW40-2ND			11/28/06 10:31	01	HPMS8	CMS
L0611537-07	LAP-29WW40-2ND DUP			11/28/06 12:03	01	HPMS8	CMS
L0611537-08	LAP-29WW40-2ND MS			11/28/06 11:02	01	HPMS8	CMS
L0611537-09	LAP-29WW40-2ND MSD			11/28/06 11:32	01	HPMS8	CMS
L0611537-10	TRIP BLANK			11/28/06 10:02	01	HPMS8	CMS

Analysis: Volatile Organics
Extraction Method: 5030B
Workgroup: WG228326

Lab ID	Client ID	Tclp Date	Prep Date	Analysis Date	Tag	Inst Id	Analyst
L0611537-01	LAP-29WW35-2ND				228326	HPMS8	CMS
L0611537-02	LAP-29WW36-2ND				228326	HPMS8	CMS
L0611537-03	LAP-29WW37-2ND				228326	HPMS8	CMS
L0611537-04	LAP-29WW38-2ND				228326	HPMS8	CMS
L0611537-05	LAP-29WW39-2ND				228326	HPMS8	CMS
L0611537-06	LAP-29WW40-2ND				228326	HPMS8	CMS
L0611537-07	LAP-29WW40-2ND DUP				228326	HPMS8	CMS
L0611537-08	LAP-29WW40-2ND MS				228326	HPMS8	CMS
L0611537-09	LAP-29WW40-2ND MSD				228326	HPMS8	CMS
L0611537-10	TRIP BLANK				228326	HPMS8	CMS

Analysis: Volatile Organics
Analytical Method: 8260B
Workgroup: WG228430

Lab ID	Client ID	Tclp Date	Prep Date	Analysis Date	Tag	Inst Id	Analyst
L0611537-01	LAP-29WW35-2ND			11/29/06 11:23	DL01	HPMS8	CMS
L0611537-02	LAP-29WW36-2ND			11/29/06 12:54	02	HPMS8	CMS

Analysis: Volatile Organics
Extraction Method: 5030B
Workgroup: WG228430

Lab ID	Client ID	Tclp Date	Prep Date	Analysis Date	Tag	Inst Id	Analyst
L0611537-01	LAP-29WW35-2ND				228430	HPMS8	CMS
L0611537-02	LAP-29WW36-2ND				228430	HPMS8	CMS

Analysis: Volatile Organics
Analytical Method: 8260B
Workgroup: WG228433

Lab ID	Client ID	Tclp Date	Prep Date	Analysis Date	Tag	Inst Id	Analyst
L0611537-04	LAP-29WW38-2ND			11/29/06 12:20	02	HPMS6	CMS
L0611537-05	LAP-29WW39-2ND			11/29/06 12:53	02	HPMS6	CMS

Analysis: Volatile Organics
Extraction Method: 5030B
Workgroup: WG228433

Lab ID	Client ID	Tclp Date	Prep Date	Analysis Date	Tag	Inst Id	Analyst
L0611537-04	LAP-29WW38-2ND				228433	HPMS6	CMS
L0611537-05	LAP-29WW39-2ND				228433	HPMS6	CMS

Kemron Environmental Services
Analyst Listing
December 4, 2006

AJF – AMANDA J. FICKIESEN
ALB – ANNIE L. BOCK
ALT – ANN L. THAYER
ARA – ADRIAN R. ACHTERMANN
ASP – AARON S. PETRIE
BRG – BRENDA R. GREGORY
CAA – CASSIE A. AUGENSTEIN
CAF – CHERYL A. FLOWERS
CAK – CHERYL A. KOELSCH
CEB – CHAD E. BARNES
CFB – CHAD F. BOOK
CLC – CHRYS L. CRAWFORD
CLS – CARA L. STRICKLER
CLW – CHARISSA L. WINTERS
CM – CHARLIE MARTIN
CMS – CRYSTAL M. STEPHENS
CPD – CHAD P. DAVIS
CSA – LUCINDA S. ARNOLD
CSH – CHRIS S. HILL
DAS – DALLAS A. SULLIVAN
DD – DIANE M. DENNIS
DDE – DEBRA D. ELLIOTT
DEL – DON E. LIGHTFRITZ
DEV – DAVID E. VANDENBERG
DGB – DOUGLAS G. BUTCHER
DIH – DEANNA I. HESSON
DLB – DAVID L. BUMGARNER
DLP – DOROTHY L. PAYNE
DLR – DIANNA L. RAUCH
DR – DEANNA ROBERTS
DRP – DAVE R. PITZER
DSF – DEBRA S. FREDERICK
DSM – DAVID S. MOSSOR
DST – DENNIS S. TEPE
ECL – ERIC C. LAWSON
ED – EMILY E. DECKER
FJB – FRANCES J. BOLDEN
HAV – HEMA VILASAGAR
JAL – JOHN A. LENT
JKT – JANE K. THOMPSON
JLS – JANICE L. SCHIMMEL
JNB – JOSHUA N. BOOTH
JS – JENNIFER L. SOUTHALL
JWR – JOHN W. RICHARDS
JWS – JACK W. SHEAVES
JYH – JI Y. HU
KCZ – KEVIN C. ZUMBRO
KEB – KATHRYN E. BARNES
KHR – KIM H. RHODES
KRA – KATHY R. ALBERTSON
LKN – LINDA K. NEDEFF
LSB – LESLIE S. BUCINA
MDA – MIKE D. ALBERTSON
MDC – MICHAEL D. COCHRAN
MES – MARY E. SCHILLING
MKZ – MARILYN K. ZUMBRO
MLR – MARY L. ROCHOTTE
MLS – MICHAEL L. SCHIMMEL
MMB – MAREN M. BEERY
MSW – MATT S. WILSON
NJB – NATALIE J. BOOTH
PAS – PATRICK A. STREET
PJM – PAUL J. MILLER
RB – ROBERT BUCHANAN
REK – ROBERT E. KYER
RNP – RICK N. PETTY
RWC – RODNEY W. CAMPBELL
SLM – STEPHANIE L. MOSSBURG
SLP – SHERI L. PFALZGRAF
SMH – SHAUNA M. HYDE
TMB – TIFFANY M. BAILEY
TMM – TAMMY M. MORRIS
VC – VICKI COLLIER
WFM – WALTER F. MARTIN

KEMRON Environmental Services

List of Valid Qualifiers

December 04, 2006

00095771

Qualkey: STD

Qualifier	Description
*	Surrogate or spike compound out of range
+	Correlation coefficient for the MSA is less than 0.995
<	Result is less than the associated numerical value.
>	Result is greater than the associated numerical value.
A	See the report narrative
B	Analyte present in method blank
C	Confirmed by GC/MS
CG	Confluent growth
DL	Surrogate or spike compound was diluted out
E	Estimated concentration due to sample matrix interference
EDL	Elevated sample reporting limits, presence of non-target analytes
EMPC	Estimated Maximum Possible Concentration
FL	Free Liquid
I	Semiquantitative result (out of instrument calibration range)
J	The analyte was positively identified, but the quantitation was below the RL
J,B	Analyte detected in both the method blank and sample above the MDL.
J,P	ESTIMATE & COLUMNS DON'T AGREE TO WITHIN 40%
L	Sample reporting limits elevated due to matrix interference
M	Matrix effect; the concentration is an estimate due to matrix effect.
N	Tentatively identified compound(TIC)
NA	Not applicable
ND	Not detected at or above the reporting limit
NF	Not found by library search
NFL	No free liquid
NI	Non-ignitable
NR	Analyte is not required to be analyzed
NS	Not spiked
P	Concentrations >40% difference between the two GC columns
Q	One or more quality control criteria fail. See narrative.
QNS	Quantity of sample not sufficient to perform analysis
RA	Reanalysis confirms reported results
RE	Reanalysis confirms sample matrix interference
S	Analyzed by method of standard addition
SMI	Sample matrix interference on surrogate
SP	Reported results are for spike compounds only
TIC	Library Search Compound
TNTC	Too numerous to count
U	Undetected; the concentration is below the reported MDL.
UJ	Undetected; the MDL and RL are estimated due to quality control discrepancies.
W	Post-digestion spike for furnace AA out of control limits
X	Exceeds regulatory limit
Z	Cannot be resolved from isomer - see below

*****Special Notes for Organic Analytes**

1. Acrolein and acrylonitrile by method 624 are semi-quantitative screens only.
2. 1,2-Diphenylhydrazine is unstable and is reported as azobenzene.
3. N-nitrosodiphenylamine cannot be separated from diphenylamine.
4. 3-Methylphenol and 4-Methylphenol are unresolvable compounds.
5. m-Xylene and p-Xylene are unresolvable compounds.
6. The reporting limits for Appendix II/IX compounds by method 8270 are based on EPA estimated PQLs referenced in 40 CFR Part 264, Appendix IX. They are not always achievable for every compound an are matrix dependent.

Organic QA/QC

KEMRON Environmental Services
Data Checklist

00095773

Date: 03-NOV-2006
Analyst: CMS
Analyst: NA
Method: 8260B/624
Instrument: HPMS8
Curve Workgroup: NA
Runlog ID: 13234
Analytical Workgroups: WG226781

System Performance Check	X
BFB	X
Initial Calibration	X
Average RF	X
Linear Reg or Higher Order Curve	X
Second Source standard % Difference	X
Continuing Calibration /Check Standards	NA
Project/Client Specific Requirements	NA
Special Standards	NA
Blanks	NA
TCL's	NA
Surrogates	NA
LCS (Laboratory Control Sample)	NA
Recoveries	NA
Surrogates	NA
MS/MSD/Duplicates	NA
Samples	NA
TCL Hits	NA
Spectra of TCL Hits	NA
Surrogates	NA
Internal Standards Criteria	NA
Library Searches	NA
Calculations & Correct Factors	NA
Dilutions Run	NA
Reruns	X
Manual Integrations	X
Case Narrative	NA
Results Reporting/Data Qualifiers	X
KOBRA Workgroup Data	X
Check for Completeness	X
Primary Reviewer	CMS
Secondary Reviewer	MDA
Check for compliance with method and project specific requirements	X
Check the completeness of reported information	X
Check the information for the report narrative	X
Check the reasonableness of the results	X

Primary Reviewer:
07-NOV-2006

Secondary Reviewer:
09-NOV-2006

Generated: NOV-09-2006 17:11:20

00095774

KEMRON Environmental Services
Data Checklist

Date: 04-NOV-2006
Analyst: CMS
Analyst: NA
Method: 8260B
Instrument: HPMS8
Curve Workgroup: NA
Runlog ID: 13239
Analytical Workgroups: WG226813;WG226781

System Performance Check	X
BFB	X
Initial Calibration	X
Average RF	X
Linear Reg or Higher Order Curve	X
Second Source standard % Difference	X
Continuing Calibration /Check Standards	X
Project/Client Specific Requirements	X
Special Standards	NA
Blanks	X
TCL's	X
Surrogates	X
LCS (Laboratory Control Sample)	X
Recoveries	X
Surrogates	X
MS/MSD/Duplicates	X
Samples	X
TCL Hits	X
Spectra of TCL Hits	X
Surrogates	X
Internal Standards Criteria	X
Library Searches	NA
Calculations & Correct Factors	X
Dilutions Run	NA
Reruns	NA
Manual Integrations	X
Case Narrative	X
Results Reporting/Data Qualifiers	X
KOBRA Workgroup Data	X
Check for Completeness	X
Primary Reviewer	CMS
Secondary Reviewer	MDA
Check for compliance with method and project specific requirements	X
Check the completeness of reported information	X
Check the information for the report narrative	X
Check the reasonableness of the results	X

Primary Reviewer:
07-NOV-2006

Secondary Reviewer:
09-NOV-2006

Generated: NOV-09-2006 08:59:53

00095775

KEMRON Environmental Services
Data Checklist

Date: 20-NOV-2006
Analyst: CMS
Analyst: NA
Method: 8260B/624
Instrument: HPMS6
Curve Workgroup: NA
Runlog ID: 13467
Analytical Workgroups: WG227929;WG228019

System Performance Check	X
BFB	X
Initial Calibration	X
Average RF	X
Linear Reg or Higher Order Curve	X
Second Source standard % Difference	X
Continuing Calibration /Check Standards	X
Project/Client Specific Requirements	X
Special Standards	NA
Blanks	X
TCL's	X
Surrogates	X
LCS (Laboratory Control Sample)	X
Recoveries	X
Surrogates	X
MS/MSD/Duplicates	NA
Samples	X
TCL Hits	X
Spectra of TCL Hits	X
Surrogates	X
Internal Standards Criteria	X
Library Searches	NA
Calculations & Correct Factors	X
Dilutions Run	X
Reruns	X
Manual Integrations	X
Case Narrative	X
Results Reporting/Data Qualifiers	X
KOBRA Workgroup Data	X
Check for Completeness	X
Primary Reviewer	CMS
Secondary Reviewer	MDA
Check for compliance with method and project specific requirements	X
Check the completeness of reported information	X
Check the information for the report narrative	X
Check the reasonableness of the results	X

Primary Reviewer:
21-NOV-2006

Secondary Reviewer:
22-NOV-2006

Generated: NOV-29-2006 09:17:11

00095776

KEMRON Environmental Services
Data Checklist

Date: 28-NOV-2006
Analyst: CMS
Analyst: NA
Method: 8260B
Instrument: HPMS8
Curve Workgroup: NA
Runlog ID: 13554
Analytical Workgroups: WG228326

System Performance Check	X
BFB	X
Initial Calibration	X
Average RF	X
Linear Reg or Higher Order Curve	X
Second Source standard % Difference	X
Continuing Calibration /Check Standards	X
Project/Client Specific Requirements	X
Special Standards	NA
Blanks	X
TCL's	X
Surrogates	X
LCS (Laboratory Control Sample)	X
Recoveries	X
Surrogates	X
MS/MSD/Duplicates	X
Samples	X
TCL Hits	X
Spectra of TCL Hits	X
Surrogates	X
Internal Standards Criteria	X
Library Searches	NA
Calculations & Correct Factors	X
Dilutions Run	X
Reruns	X
Manual Integrations	NA
Case Narrative	X
Results Reporting/Data Qualifiers	X
KOBRA Workgroup Data	X
Check for Completeness	X
Primary Reviewer	CMS
Secondary Reviewer	MDA
Check for compliance with method and project specific requirements	X
Check the completeness of reported information	X
Check the information for the report narrative	X
Check the reasonableness of the results	X

Primary Reviewer:
29-NOV-2006

Secondary Reviewer:
29-NOV-2006

Generated: NOV-29-2006 13:58:33

KEMRON Environmental Services
Data Checklist

00095777

Date: 29-NOV-2006
Analyst: CMS
Analyst: NA
Method: 8260B
Instrument: HPMS8
Curve Workgroup: NA
Runlog ID: 13590
Analytical Workgroups: WG228430

System Performance Check	X
BFB	X
Initial Calibration	X
Average RF	X
Linear Reg or Higher Order Curve	X
Second Source standard % Difference	X
Continuing Calibration /Check Standards	X
Project/Client Specific Requirements	X
Special Standards	X
Blanks	X
TCL's	X
Surrogates	X
LCS (Laboratory Control Sample)	X
Recoveries	X
Surrogates	X
MS/MSD/Duplicates	X
Samples	X
TCL Hits	X
Spectra of TCL Hits	X
Surrogates	X
Internal Standards Criteria	X
Library Searches	X
Calculations & Correct Factors	X
Dilutions Run	X
Reruns	X
Manual Integrations	NA
Case Narrative	X
Results Reporting/Data Qualifiers	X
KOBRA Workgroup Data	X
Check for Completeness	X
Primary Reviewer	CMS
Secondary Reviewer	MDA
Check for compliance with method and project specific requirements	X
Check the completeness of reported information	X
Check the information for the report narrative	X
Check the reasonableness of the results	X

Primary Reviewer:
01-DEC-2006

Secondary Reviewer:
01-DEC-2006

Generated: DEC-01-2006 14:24:33

00095778

KEMRON Environmental Services
Data Checklist

Date: 29-NOV-2006
Analyst: CMS
Analyst: NA
Method: 8260B
Instrument: HPMS6
Curve Workgroup: NA
Runlog ID: 13579
Analytical Workgroups: WG228433

System Performance Check	X
BFB	X
Initial Calibration	X
Average RF	X
Linear Reg or Higher Order Curve	X
Second Source standard % Difference	X
Continuing Calibration /Check Standards	X
Project/Client Specific Requirements	X
Special Standards	X
Blanks	X
TCL's	X
Surrogates	X
LCS (Laboratory Control Sample)	X
Recoveries	X
Surrogates	X
MS/MSD/Duplicates	NA
Samples	X
TCL Hits	X
Spectra of TCL Hits	X
Surrogates	X
Internal Standards Criteria	X
Library Searches	NA
Calculations & Correct Factors	X
Dilutions Run	X
Reruns	NA
Manual Integrations	X
Case Narrative	X
Results Reporting/Data Qualifiers	X
KOBRA Workgroup Data	X
Check for Completeness	X
Primary Reviewer	CMS
Secondary Reviewer	MDA
Check for compliance with method and project specific requirements	X
Check the completeness of reported information	X
Check the information for the report narrative	X
Check the reasonableness of the results	X

Primary Reviewer:
30-NOV-2006

Secondary Reviewer:
30-NOV-2006

Generated: NOV-30-2006 14:19:38

00095779

KEMRON Environmental Services

Instrument Run Log

Instrument: HPMS8 Dataset: 110306
Analyst1: CMS Analyst2: NA
Method: 8260B SOP: MSV01 Rev: 10
Method: 624 SOP: MSV10 Rev: 9
Method: 5030B SOP: PAT01 Rev: 10
Maintenance Log ID: 16542

Internal Standard: STD15771 Surrogate Standard: STD15905
CCV: STD16158 LCS: STD16138 MS/MSD: NA

Column 1 ID: RTX502.2 Column 2 ID: NA
Workgroups: WG226781

Comments: Troubleshooting instrument from files 8M331734-8M331740

Seq.	File ID	Sample Information	pH	Mat	Dil	Reference	Date/Time
1	8M331734	SYSTEM BLANK CHECK	NA	1	1		11/03/06 11:48
2	8M331735	SYSTEM BLANK CHECK	NA	1	1		11/03/06 12:30
3	8M331736	SYSTEM BLANK 1141	NA	1	1		11/03/06 13:13
4	8M331737	SYSTEM BLANK 1176	NA	1	1		11/03/06 13:45
5	8M331738	WG226781-01 BFB 50ng STD 8260	NA	1	1	STD15559	11/03/06 14:14
6	8M331739	WG226781-01 BFB 50ng STD 8260	NA	1	1	STD15559	11/03/06 14:29
7	8M331740	SYSTEM BLANK	NA	1	1		11/03/06 15:08
8	8M331741	WG226781-01 BFB 50ng STD 8260	NA	1	1	STD15559	11/03/06 15:36
9	8M331742	WG226781-02 50ug/L STD 8260	NA	1	1	STD16005	11/03/06 16:05
10	8M331743	SYSTEM BLANK	NA	1	1		11/03/06 16:36
11	8M331744	SYSTEM BLANK	NA	1	1		11/03/06 17:06
12	8M331745	WG226781-02 0.30ug/L STD 8260	NA	1	1	STD16158	11/03/06 17:37
13	8M331746	WG226781-03 0.40ug/L STD 8260	NA	1	1	STD16158	11/03/06 18:08
14	8M331747	WG226781-04 1ug/L STD 8260	NA	1	1	STD16158	11/03/06 18:38
15	8M331748	WG226781-05 2ug/L STD 8260	NA	1	1	STD16158	11/03/06 19:09
16	8M331749	WG226781-06 5ug/L STD 8260	NA	1	1	STD16158	11/03/06 19:39
17	8M331750	WG226781-07 20ug/L STD 8260	NA	1	1	STD16158	11/03/06 20:10
18	8M331751	WG226781-08 50ug/L STD 8260	NA	1	1	STD16158	11/03/06 20:41
19	8M331752	WG226781-09 100ug/L STD 8260	NA	1	1	STD16158	11/03/06 21:12
20	8M331753	WG226781-10 200ug/L STD 8260	NA	1	1	STD16158	11/03/06 21:42
21	8M331754	SYSTEM BLANK	NA	1	1		11/03/06 22:13
22	8M331755	SYSTEM BLANK	NA	1	1		11/03/06 22:44
23	8M331756	WG226781-11 20ug/L ALT SOURCE STD 8	NA	1	1	STD16138	11/03/06 23:14

Comments

Seq.	Rerun	Dil.	Reason	Analytes
23	X			
File ID: 8M331756				
	DNR-Acetone high			

Approved: November 09, 2006

Page: 1 of 1

00095780

KEMRON Environmental Services

Instrument Run Log

Instrument: HPMS8 Dataset: 110406

Analyst1: CMS Analyst2: NA

Method: 8260B SOP: MSV01 Rev: 10

Method: 5030B SOP: PAT01 Rev: 10

Maintenance Log ID: 16547

Internal Standard: STD15771 Surrogate Standard: STD15905

CCV: STD16158 LCS: STD16138 MS/MSD: NA

Column 1 ID: RTX502.2 Column 2 ID: NA

Workgroups: WG226813;WG226781

Comments:

Seq.	File ID	Sample Information	pH	Mat	Dil	Reference	Date/Time
1	8M331758	WG226812-01 BFB 50ng STD 8260	NA	1	1	STD15559	11/04/06 11:44
2	8M331759	WG226812-02 50ug/L STD 8260	NA	1	1	STD16158	11/04/06 12:10
3	8M331760	WG226813-01 VBLK1104 BLANK 8260	NA	1	1		11/04/06 12:40
4	8M331761	WG226781-11 20ug/L ALT SOURCE	NA	1	1	STD16138	11/04/06 13:11
5	8M331762	WG226813-01 VBLK1104 BLANK 8260	NA	1	1		11/04/06 13:41
6	8M331763	WG226813-02 20ug/L LCS 8260	NA	1	1	STD16138	11/04/06 14:12
7	8M331764	WG226813-03 20ug/L LCSDUP 8260	NA	1	1	STD16138	11/04/06 14:43
8	8M331765	L0610674-01 B 826-SPE1	=7	1	1		11/04/06 15:14
9	8M331766	L0610812-09 A 826-SPE	<2	1	1		11/04/06 15:44
10	8M331767	L0610806-10 A 826-SPE	<2	1	1		11/04/06 16:15
11	8M331768	L0610814-49 A 826-LOW	<2	1	1		11/04/06 16:46
12	8M331769	L0610814-50 A 826-LOW	<2	1	1		11/04/06 17:17
13	8M331770	L0610746-05 A 826-SPE2	<2	1	1		11/04/06 17:48
14	8M331771	L0610746-07 A 826-SPE2	<2	1	1		11/04/06 18:18
15	8M331772	L0610812-08 A 826-SPE	<2	1	1		11/04/06 18:49
16	8M331773	L0610812-10 A 826-SPE	<2	1	1		11/04/06 19:20
17	8M331774	L0610806-08 A 826-SPE	<2	1	1		11/04/06 19:50
18	8M331775	L0610806-09 A 826-SPE	<2	1	1		11/04/06 20:21
19	8M331776	L0610823-02 A 826-LOW	=2.2	1	1		11/04/06 20:52
20	8M331777	L0610823-03 A 826-LOW	=2.5	1	1		11/04/06 21:22
21	8M331778	L0610823-04 A 826-LOW	=2.2	1	1		11/04/06 21:53
22	8M331779	L0610823-05 A 826-LOW	=5	1	1		11/04/06 22:24
23	8M331780	L0610746-01 A 826-SPE2	=2.2	1	1		11/04/06 22:54
24	8M331781	L0610746-03 A 826-SPE2	<2	1	1		11/04/06 23:25
25	8M331782	SYSTEM BLANK	NA	1	1		11/04/06 23:55
26	8M331783	SYSTEM BLANK	NA	1	1		11/05/06 00:26

Comments

Seq.	Rerun	Dil.	Reason	Analytes
3	X		Carry-over contamination	
File ID: 8M331760				

Approved: November 09, 2006

KEMRON Environmental Services

Instrument Run Log

00095781

Instrument: HPMS8 Dataset: 110406

Analyst1: CMS Analyst2: NA

Method: 8260B SOP: MSV01 Rev: 10

Method: 5030B SOP: PAT01 Rev: 10

Maintenance Log ID: 16547

Internal Standard: STD15771 Surrogate Standard: STD15905

CCV: STD16158 LCS: STD16138 MS/MSD: NA

Column 1 ID: RTX502.2 Column 2 ID: NA

Workgroups: WG226813;WG226781

Comments

Seq.	Rerun	Dil.	Reason	Analytes
DNR				

Approved: November 09, 2006

KEMRON Environmental Services

Instrument Run Log

00095782

Instrument: HPMS6 Dataset: 112006
Analyst1: CMS Analyst2: NA
Method: 8260B SOP: MSV01 Rev: 10
Method: 624 SOP: MSV10 Rev: 9
Method: 5030B SOP: PAT01 Rev: 10
Maintenance Log ID: 16762

Internal Standard: STD16289 Surrogate Standard: STD16354
CCV: STD16437 LCS: STD16443 MS/MSD: NA

Column 1 ID: RTX502.2 Column 2 ID: NA
Workgroups: WG227929;WG228019

Comments:

Seq.	File ID	Sample Information	pH	Mat	Dil	Reference	Date/Time
1	6M62035	SYSTEM BLANK	NA	1	1		11/20/06 08:03
2	6M62036	SYSTEM BLANK	NA	1	1		11/20/06 08:35
3	6M62037	WG227929-01 BFB 50ng STD 8260	NA	1	1	STD16160	11/20/06 09:10
4	6M62038	WG227929-02 0.30ug/L STD 8260	NA	1	1	STD16437	11/20/06 09:38
5	6M62039	WG227929-03 0.40ug/L STD 8260	NA	1	1	STD16437	11/20/06 10:10
6	6M62040	WG227929-04 1ug/L STD 8260	NA	1	1	STD16437	11/20/06 10:43
7	6M62041	WG227929-05 2ug/L STD 8260	NA	1	1	STD16437	11/20/06 11:15
8	6M62042	WG227929-06 5ug/L STD 8260	NA	1	1	STD16437	11/20/06 11:47
9	6M62043	WG227929-07 20ug/L STD 8260	NA	1	1	STD16437	11/20/06 12:19
10	6M62044	WG227929-08 50ug/L STD 8260	NA	1	1	STD16437	11/20/06 12:52
11	6M62045	WG227929-09 100ug/L STD 8260	NA	1	1	STD16437	11/20/06 13:24
12	6M62046	WG227929-10 150ug/L STD 8260	NA	1	1	STD16437	11/20/06 13:57
13	6M62047	WG227929-11 200ug/L STD 8260	NA	1	1	STD16437	11/20/06 14:29
14	6M62049	SYSTEM BLANK	NA	1	1		11/20/06 15:34
15	6M62050	WG227929-12 20ug/L LCS STD 8260	NA	1	1	STD16443	11/20/06 16:09
16	6M62051	WG227929-12 20ug/L LCS STD 8260	NA	1	1	STD16443	11/20/06 17:01
17	6M62052	WG228018-01 BFB 50ng STD 8260	NA	1	1	STD16160	11/20/06 17:31
18	6M62053	WG228018-01 BFB 50ng STD 8260	NA	1	1	STD16160	11/20/06 18:00
19	6M62054	WG228018-02 50ug/L STD 8260	NA	1	1	STD16437	11/20/06 18:27
20	6M62055	WG228019-01 VBLK1120 BLANK 8260	NA	1	1		11/20/06 18:59
21	6M62056	WG228019-02 20ug/L LCS STD 8260	NA	1	1	STD16443	11/20/06 19:32
22	6M62057	WG228019-03 20ug/L LCSDUP STD 8260	NA	1	1	STD16443	11/20/06 20:04
23	6M62058	WG228019-04 FBLK1113 FLUID BLK	NA	18	1		11/20/06 20:36
24	6M62059	L0611351-11 A 826-SPE	<2	1	1		11/20/06 21:09
25	6M62060	L0611355-07 A 826-SPE	<2	1	1		11/20/06 21:41
26	6M62061	L0611356-08 A 826-SPE	<2	1	1		11/20/06 22:14
27	6M62062	L0611321-09 A 826-SPE	<2	1	1		11/20/06 22:48
28	6M62063	L0611321-01 A 826-SPE/826-LS	=6	1	1		11/20/06 23:21
29	6M62064	L0611321-02 A 826-SPE/826-LS	<2	1	1		11/20/06 23:53
30	6M62065	L0611321-04 A 826-SPE/826-LS	<2	1	1		11/21/06 00:26
31	6M62066	L0611321-06 A 826-SPE/826-LS	<2	1	1		11/21/06 00:58
32	6M62067	L0611321-07 A 826-SPE/826-LS	<2	1	1		11/21/06 01:30

Approved: November 22, 2006

KEMRON Environmental Services

Instrument Run Log

00095783

Instrument: HPMS6 Dataset: 112006
Analyst1: CMS Analyst2: NA
Method: 8260B SOP: MSV01 Rev: 10
Method: 624 SOP: MSV10 Rev: 9
Method: 5030B SOP: PAT01 Rev: 10
Maintenance Log ID: 16762

Internal Standard: STD16289 Surrogate Standard: STD16354
CCV: STD16437 LCS: STD16443 MS/MSD: NA

Column 1 ID: RTX502.2 Column 2 ID: NA
Workgroups: WG227929;WG228019

Seq.	File ID	Sample Information	pH	Mat	Dil	Reference	Date/Time
33	6M62068	L0611355-01 A 826-SPE	<2	1	1		11/21/06 02:04
34	6M62069	L0611355-02 A 826-SPE	<2	1	1		11/21/06 02:37
35	6M62070	L0611355-03 A 826-SPE	<2	1	1		11/21/06 03:11
36	6M62071	L0611355-04 A 826-SPE	<2	1	1		11/21/06 03:44
37	6M62072	L0611355-05 A 826-SPE	<2	1	1		11/21/06 04:16
38	6M62073	L0611355-06 A 826-SPE	<2	1	1		11/21/06 04:48
39	6M62074	L0611351-08 A 10X 826-SPE/826-LS	=2.5	1	10		11/21/06 05:20
40	6M62075	L0611351-09 A 10X 826-SPE/826-LS D1	<2	1	10		11/21/06 05:53
41	6M62076	SYSTEM BLANK	NA	1	1		11/21/06 06:27
42	6M62077	WG228019-05 624 BLANK	NA	2	1		11/21/06 07:01
43	6M62078	L0611478-01 A 624-SPE	<2	2	1		11/21/06 07:34
44	6M62079	L0611478-02 A 624-SPE	<2	2	1		11/21/06 08:08

Comments

Seq.	Rerun	Dil.	Reason	Analytes
15	X			
File ID: 6M62050				
	RR-2-Butanone high-DNR			
17	X			
File ID: 6M62052				
	Tune failed/DNR			
40	X	2	Analyzed too dilute	
File ID: 6M62075				
	D1 if needed			

Approved: November 22, 2006

00095784

KEMRON Environmental Services

Instrument Run Log

Instrument: HPMS8 Dataset: 112806
Analyst1: CMS Analyst2: NA
Method: 8260B SOP: MSV01 Rev: 10
Method: 5030B SOP: PAT01 Rev: 10

Maintenance Log ID: 16849

Internal Standard: STD16213 Surrogate Standard: STD16507
CCV: STD16504 LCS: STD16525 MS/MSD: STD16525

Column 1 ID: RTX502.2 Column 2 ID: NA
Workgroups: WG228326

Comments:

Seq.	File ID	Sample Information	pH	Mat	Dil	Reference	Date/Time
1	8M332367	WG228325-01 50ng BFB STD 8260	NA	1	1	STD16160	11/28/06 06:29
2	8M332368	WG228325-02 50ug/L STD 8260	NA	1	1	STD16504	11/28/06 06:56
3	8M332369	WG228325-03 100ug/L MAOXY STD 8260	NA	1	1	STD16502	11/28/06 07:29
4	8M332370	WG228326-01 VBLK1128 BLANK 8260	NA	1	1		11/28/06 07:59
5	8M332371	WG228326-02 20ug/L LCS STD 8260	NA	1	1	STD16525	11/28/06 08:30
6	8M332372	L0611585-01 A 10000X 8260 4.85g/10mL	NA	10	5000		11/28/06 09:00
7	8M332373	L0611510-02 A 8260	NA	1	1		11/28/06 09:31
8	8M332374	L0611537-10 A 826-LOW	NA	1	1		11/28/06 10:02
9	8M332375	WG228326-03 L0611537-07 A 826-LOW	NA	1	1		11/28/06 10:31
10	8M332376	WG228326-04 L0611537-08 MS A 826-LO	NA	1	1	STD16525	11/28/06 11:02
11	8M332377	WG228326-05 L0611537-09 MSD A 826-L	NA	1	1	STD16525	11/28/06 11:32
12	8M332378	L0611537-07 A 826-LOW	NA	1	1		11/28/06 12:03
13	8M332379	L0611537-01 A 826-LOW	NA	1	1		11/28/06 12:33
14	8M332380	L0611537-02 A 826-LOW	NA	1	1		11/28/06 13:03
15	8M332381	L0611537-03 A 826-LOW	NA	1	1		11/28/06 13:33
16	8M332382	L0611537-04 A 826-LOW	NA	1	1		11/28/06 14:03
17	8M332383	L0611537-05 A 826-LOW	NA	1	1		11/28/06 14:34
18	8M332384	L0611510-01 A 8260	NA	1	1		11/28/06 15:04
19	8M332385	L0611436-01 A 826-SPE1	NA	1	1		11/28/06 15:34
20	8M332386	L0611436-05 A 826-SPE1	NA	1	1		11/28/06 16:04
21	8M332387	L0611436-03 A 826-SPE1	NA	1	1		11/28/06 16:35
22	8M332388	L0611436-02 A 50X 826-SPE1	NA	1	50		11/28/06 17:05
23	8M332389	L0611436-04 A 2X 826-SPE1	NA	1	2		11/28/06 17:35
24	8M332390	L0611436-06 A 5X 826-SPE1	NA	1	5		11/28/06 18:06
25	8M332391	SYSTEM BLANK	NA	1	1		11/28/06 18:36

Comments

Seq.	Rerun	Dil.	Reason	Analytes
3				
File ID: 8M332369				
	DNR-NOT NEEDED			
13	X	20	Over Calibration Range	MECL

Approved: November 29, 2006

KEMRON Environmental Services

Instrument Run Log

00095785

Instrument: HPMS8 Dataset: 112806
Analyst1: CMS Analyst2: NA
Method: 8260B SOP: MSV01 Rev: 10
Method: 5030B SOP: PAT01 Rev: 10

Maintenance Log ID: 16849

Internal Standard: STD16213 Surrogate Standard: STD16507
CCV: STD16504 LCS: STD16525 MS/MSD: STD16525

Column 1 ID: RTX502.2 Column 2 ID: NA
Workgroups: WG228326

Comments

Seq.	Rerun	Dil.	Reason	Analytes
File ID: 8M332379				
14	X		Carry-over contamination	
File ID: 8M332380				
	DNR			
16	X		Carry-over contamination	
File ID: 8M332382				
	DNR			
17	X		Carry-over contamination	
File ID: 8M332383				
	DNR			

Approved: November 29, 2006

Page: 2 of 2

KEMRON Environmental Services

00095786

Instrument Run Log

Instrument: HPMS8 Dataset: 112906
Analyst1: CMS Analyst2: NA
Method: 8260B SOP: MSV01 Rev: 10
Method: 5030B SOP: PAT01 Rev: 10

Maintenance Log ID: 16890

Internal Standard: STD16213 Surrogate Standard: STD16507
CCV: STD16504;STD16179 LCS: STD16525;STD16180 MS/MSD: STD16525

Column 1 ID: RTX502.2 Column 2 ID: NA
Workgroups: WG228430

Comments:

Seq.	File ID	Sample Information	pH	Mat	Dil	Reference	Date/Time
1	8M332393	WG228429-01 50ng BFB STD 8260	NA	1	1	STD16160	11/29/06 07:46
2	8M332394	WG228429-02 50ug/L STD 8260	NA	1	1	STD16504	11/29/06 08:15
3	8M332395	WG228429-03 100ug/L A9-FOO-BD STD 8	NA	1	1	STD16179	11/29/06 08:49
4	8M332396	WG228430-01 VBLK1129 BLANK 8260	NA	1	1		11/29/06 09:19
5	8M332397	WG228430-01 VBLK1129 BLANK 8260	NA	1	1		11/29/06 09:52
6	8M332398	WG228430-06 100ug/L LCS STD 8260	NA	1	1	STD16180	11/29/06 10:22
7	8M332399	WG228430-02 20ug/L LCS STD 8260	NA	1	1	STD16525	11/29/06 10:52
8	8M332400	L0611537-01 B 20X 826-LOW D1	<2	1	20		11/29/06 11:23
9	8M332401	L0611466-05 A 826-SPE	<2	1	1		11/29/06 11:54
10	8M332402	L0611507-04 A 826-SPE/826-LS	<2	1	1		11/29/06 12:24
11	8M332403	L0611537-02 B 826-LOW	<2	1	1		11/29/06 12:54
12	8M332404	L0611378-07 B 10X 826-A9-SPE	=2.2	1	10		11/29/06 13:25
13	8M332405	WG228430-07 L0611496-01 A 826-SPE	<2	1	1		11/29/06 13:55
14	8M332406	WG228430-08 L0611496-02 MS A 826-SP	<2	1	1	STD16525	11/29/06 14:25
15	8M332407	WG228430-09 L0611496-03 MSD A 826-S	<2	1	1	STD16525	11/29/06 14:55
16	8M332408	WG228430-10 FBLK1102 FLUID BLK	NA	1	1		11/29/06 15:25
17	8M332409	L0611507-03 A 826-SPE/826-LS	=7	1	1		11/29/06 15:55
18	8M332410	L0611523-04 A 826-SPE/826-LS	<2	1	1		11/29/06 16:25
19	8M332411	L0611466-01 A 5X 826-SPE/826-LS	<2	1	5		11/29/06 16:55
20	8M332412	L0611466-03 A 10X 826-SPE/826-LS	<2	1	10		11/29/06 17:25
21	8M332413	L0611466-04 A 20X 826-SPE/826-LS	<2	1	20		11/29/06 17:56
22	8M332414	L0611507-01 A 20X 826-SPE/826-LS	<2	1	20		11/29/06 18:26
23	8M332415	L0611523-01 A 500X 826-SPE/826-LS	=2.5	1	500		11/29/06 18:56
24	8M332416	L0611523-02 A 5X 826-SPE/826-LS	=2.2	1	5		11/29/06 19:26
25	8M332417	SYSTEM BLANK	NA	1	1		11/29/06 19:56

Comments

Seq.	Rerun	Dil.	Reason	Analytes
3				
File ID: 8M332395				
			renamed WG228649-01 for A9/FOO	
4	X		Carry-over contamination	

Approved: December 01, 2006

KEMRON Environmental Services

Instrument Run Log

00095787

Instrument: HPMS8 Dataset: 112906

Analyst1: CMS Analyst2: NA

Method: 8260B SOP: MSV01 Rev: 10

Method: 5030B SOP: PAT01 Rev: 10

Maintenance Log ID: 16890

Internal Standard: STD16213 Surrogate Standard: STD16507

CCV: STD16504;STD16179 LCS: STD16525;STD16180 MS/MSD: STD16525

Column 1 ID: RTX502.2 Column 2 ID: NA

Workgroups: WG228430

Comments

Seq.	Rerun	Dil.	Reason	Analytes
File ID: 8M332396				
	DNR			
20	X	100	Over Calibration Range	CB
File ID: 8M332412				
24	X	50	Over Calibration Range	CB
File ID: 8M332416				

Approved: December 01, 2006

00095788

KEMRON Environmental Services

Instrument Run Log

Instrument: HPMS6 Dataset: 112906

Analyst1: CMS Analyst2: NA

Method: 8260B SOP: MSV01 Rev: 10

Method: 5030B SOP: PAT01 Rev: 10

Maintenance Log ID: 16879

Internal Standard: STD16289 Surrogate Standard: STD126354

CCV: STD16437 LCS: STD16525 MS/MSD: NA

Column 1 ID: RTX502.2 Column 2 ID: NA

Workgroups: WG228433

Comments:

Seq.	File ID	Sample Information	pH	Mat	Dil	Reference	Date/Time
1	6M62269	WG228431-01 50ng BFB STD 8260	NA	1	1	STD16160	11/29/06 07:46
2	6M62270	WG228431-01 50ng BFB STD 8260	NA	1	1	STD16160	11/29/06 08:01
3	6M62271	WG228431-02 50ug/L STD 8260	NA	1	1	STD16437	11/29/06 08:33
4	6M62272	WG228433-01 VBLK1129 BLANK 8260	NA	1	1		11/29/06 09:05
5	6M62273	WG228433-02 20ug/L LCS STD 8260	NA	1	1	STD16525	11/29/06 09:38
6	6M62274	WG228433-03 20ug/L LCSDUP STD 8260	NA	1	1	STD16525	11/29/06 10:10
7	6M62275	L0611436-07 B 500X 826-SPE D1	=2.2	1	500		11/29/06 10:43
8	6M62276	L0611479-08 A 826-SPE	<2	1	1		11/29/06 11:16
9	6M62277	L0611404-06 B 826-SPE	<2	1	1		11/29/06 11:48
10	6M62278	L0611537-04 B 826-LOW	<2	1	1		11/29/06 12:20
11	6M62279	L0611537-05 B 826-LOW	<2	1	1		11/29/06 12:53
12	6M62280	L0611306-01 B 200X 826-SPE1	<2	1	200		11/29/06 13:25
13	6M62281	L0611306-02 B 10X 826-SPE1	<2	1	10		11/29/06 13:58
14	6M62282	L0611306-03 B 826-SPE1	<2	1	1		11/29/06 14:30
15	6M62283	L0611306-04 B 826-SPE1	<2	1	1		11/29/06 15:02
16	6M62284	L0611306-05 B 826-SPE1	<2	1	1		11/29/06 15:35
17	6M62285	L0611306-06 B 826-SPE1	<2	1	1		11/29/06 16:07
18	6M62286	L0611306-08 B 826-SPE1	<2	1	1		11/29/06 16:40
19	6M62287	L0611306-07 B 826-SPE1	<2	1	1		11/29/06 17:12
20	6M62288	L0611479-01 A 826-SPE	=7	1	1		11/29/06 17:45
21	6M62289	L0611479-03 A 826-SPE	=7	1	1		11/29/06 18:17
22	6M62290	L0611479-05 A 826-SPE	=7	1	1		11/29/06 18:50
23	6M62291	L0611479-07 A 826-SPE	=7	1	1		11/29/06 19:23
24	6M62292	L0611470-02 A 10X 826-TC	NA	17	10		11/29/06 19:55
25	6M62293	SYSTEM CHK	NA	1	1		11/29/06 20:28
26	6M62294	SYSTEM CHK	NA	1	1		11/29/06 21:00

Comments

Seq.	Rerun	Dil.	Reason	Analytes
1	X			

File ID: 6M62269

Approved: November 30, 2006

KEMRON Environmental Services

Instrument Run Log

00095789

Instrument: HPMS6 Dataset: 112906

Analyst1: CMS Analyst2: NA

Method: 8260B SOP: MSV01 Rev: 10

Method: 5030B SOP: PAT01 Rev: 10

Maintenance Log ID: 16879

Internal Standard: STD16289 Surrogate Standard: STD126354

CCV: STD16437 LCS: STD16525 MS/MSD: NA

Column 1 ID: RTX502.2 Column 2 ID: NA

Workgroups: WG228433

Comments

Seq.	Rerun	Dil.	Reason	Analytes
			Tune failed/DNR	

Approved: November 30, 2006

KEMRON Environmental Services
HOLDING TIMES
EQUIVALENT TO AFCEE FORM 9

00095790

Analytical Method: 8260B AAB#: WG228433

Login Number: L0611537

Client ID	Date Collected	Date Received	Date Extracted	Max Hold Time Ext.	Time Held Ext.	Date Analyzed	Max Hold Time Anal	Time Held Anal.	Q
LAP-29WW38-2ND	11/20/06	11/22/06	11/29/06	14	8.91	11/29/06	14	8.91	
LAP-29WW39-2ND	11/20/06	11/22/06	11/29/06	14	8.97	11/29/06	14	8.97	

* EXT = SEE PROJECT QAPP REQUIREMENTS
*ANAL = SEE PROJECT QAPP REQUIREMENTS

KEMRON FORMS - Modified 11/20/2006
Version 1.5 PDF File ID: 637628
Report generated 12/01/2006 16:00

KEMRON Environmental Services
HOLDING TIMES
EQUIVALENT TO AFCEE FORM 9

00095791

Analytical Method: 8260B AAB#: WG228430

Login Number: L0611537

Client ID	Date Collected	Date Received	Date Extracted	Max Hold Time Ext.	Time Held Ext.	Date Analyzed	Max Hold Time Anal	Time Held Anal.	Q
LAP-29WW35-2ND	11/20/06	11/22/06	11/29/06	14	8.83	11/29/06	14	8.83	
LAP-29WW36-2ND	11/17/06	11/22/06	11/29/06	14	12.0	11/29/06	14	12.0	

* EXT = SEE PROJECT QAPP REQUIREMENTS
*ANAL = SEE PROJECT QAPP REQUIREMENTS

KEMRON FORMS - Modified 11/20/2006
Version 1.5 PDF File ID: 637628
Report generated 12/01/2006 16:00

KEMRON Environmental Services
HOLDING TIMES
EQUIVALENT TO AFCEE FORM 9

00095792

Analytical Method: 8260B AAB#: WG228326

Login Number: L0611537

Client ID	Date Collected	Date Received	Date Extracted	Max Hold Time Ext.	Time Held Ext.	Date Analyzed	Max Hold Time Anal	Time Held Anal.	Q
LAP-29WW40-2ND DUP	11/21/06	11/22/06	11/28/06	14	7.09	11/28/06	14	7.09	
LAP-29WW40-2ND	11/21/06	11/22/06	11/28/06	14	7.03	11/28/06	14	7.03	
TRIP BLANK	11/21/06	11/22/06	11/28/06	14	7.42	11/28/06	14	7.42	
LAP-29WW40-2ND MS	11/21/06	11/22/06	11/28/06	14	7.05	11/28/06	14	7.05	
LAP-29WW40-2ND MSD	11/21/06	11/22/06	11/28/06	14	7.07	11/28/06	14	7.07	
LAP-29WW35-2ND	11/20/06	11/22/06	11/28/06	14	7.88	11/28/06	14	7.88	
LAP-29WW37-2ND	11/17/06	11/22/06	11/28/06	14	11.1	11/28/06	14	11.1	

* EXT = SEE PROJECT QAPP REQUIREMENTS
*ANAL = SEE PROJECT QAPP REQUIREMENTS

KEMRON FORMS - Modified 11/20/2006
Version 1.5 PDF File ID: 637628
Report generated 12/01/2006 16:00

SURROGATE STANDARDS

00095793

Login Number: L0611537
Instrument Id: HPMS6
Workgroup (AAB#): WG228433

Method: 8260
CAL ID: HPMS6-20-NOV-06
Matrix: Water

Sample Number	Dilution	Tag	1	2	3	4
L0611537-04	1.00	02	88.0	95.6	95.2	99.8
L0611537-05	1.00	02	89.5	95.4	96.1	99.4
WG228433-01	1.00	01	82.5	91.9	92.7	98.6
WG228433-02	1.00	01	85.7	94.6	92.5	98.5
WG228433-03	1.00	01	85.1	93.7	93.4	99.0

Surrogates	Surrogate Limits		
1 - 1,2-Dichloroethane-d4	80	-	120
2 - Dibromofluoromethane	86	-	118
3 - 4-Bromofluorobenzene	86	-	115
4 - Toluene-d8	88	-	110

Underline = Result out of surrogate limits

DL = surrogate diluted out
ND = surrogate not detected

KEMRON FORMS - Modified 09/27/2006
Version 1.5 PDF File ID: 637637
Report generated 12/01/2006 16:01

SURROGATE STANDARDS

00095794

Login Number: L0611537
Instrument Id: HPMS8
Workgroup (AAB#): WG228326

Method: 8260
CAL ID: HPMS8-03-NOV-06
Matrix: Water

Sample Number	Dilution	Tag	1	2	3	4
L0611537-01	1.00	01	99.5	95.7	92.6	96.0
L0611537-03	1.00	01	103	96.3	93.4	96.0
L0611537-06	1.00	01	105	96.3	91.4	95.5
L0611537-07	1.00	01	99.7	95.0	93.2	97.0
L0611537-08	1.00	01	102	96.3	90.6	95.0
L0611537-09	1.00	01	101	96.8	90.0	94.3
L0611537-10	1.00	01	102	96.3	92.8	96.8
WG228326-01	1.00	01	102	96.6	93.6	96.5
WG228326-02	1.00	01	101	95.5	93.1	94.2

Surrogates	Surrogate Limits		
1 - 1,2-Dichloroethane-d4	80	-	120
2 - Dibromofluoromethane	86	-	118
3 - 4-Bromofluorobenzene	86	-	115
4 - Toluene-d8	88	-	110

Underline = Result out of surrogate limits

DL = surrogate diluted out
ND = surrogate not detected

KEMRON FORMS - Modified 09/27/2006
Version 1.5 PDF File ID: 637637
Report generated 12/01/2006 16:01

SURROGATE STANDARDS

00095795

Login Number: L0611537
Instrument Id: HPMS8
Workgroup (AAB#): WG228430

Method: 8260
CAL ID: HPMS8-03-NOV-06
Matrix: Water

Sample Number	Dilution	Tag	1	2	3	4
L0611537-01	20.0	DL01	100	93.7	95.4	96.3
L0611537-02	1.00	02	104	96.0	96.6	98.2
WG228430-01	1.00	01	102	94.8	94.6	97.2
WG228430-02	1.00	01	99.3	95.2	94.8	95.6
WG228430-06	1.00	01	102	96.4	95.9	98.4
WG228430-10	1.00	01	97.8	92.1	96.2	97.2

Surrogates	Surrogate Limits		
1 - 1,2-Dichloroethane-d4	80	-	120
2 - Dibromofluoromethane	86	-	118
3 - 4-Bromofluorobenzene	86	-	115
4 - Toluene-d8	88	-	110

Underline = Result out of surrogate limits

DL = surrogate diluted out
ND = surrogate not detected

KEMRON FORMS - Modified 09/27/2006
Version 1.5 PDF File ID: 637637
Report generated 12/01/2006 16:01

METHOD BLANK SUMMARY

00095796

Login Number: L0611537
Work Group: WG228326
Blank File ID: 8M332370
Blank Sample ID: WG228326-01
Date Analyzed: 11/28/06
Instrument ID: HPMS8
Time Analyzed: 07:59
Method: 8260B
Analyst: CMS

This Method Blank Applies To The Following Samples:

Client ID	Lab Sample ID	Lab File ID	Time Analyzed	TAG
LCS	WG228326-02	8M332371	11/28/06 08:30	01
TRIP BLANK	L0611537-10	8M332374	11/28/06 10:02	01
LAP-29WW40-2ND	L0611537-06	8M332375	11/28/06 10:31	01
LAP-29WW40-2ND MS	L0611537-08	8M332376	11/28/06 11:02	01
LAP-29WW40-2ND MSD	L0611537-09	8M332377	11/28/06 11:32	01
LAP-29WW40-2ND DUP	L0611537-07	8M332378	11/28/06 12:03	01
LAP-29WW35-2ND	L0611537-01	8M332379	11/28/06 12:33	01
LAP-29WW37-2ND	L0611537-03	8M332381	11/28/06 13:33	01

KEMRON FORMS - Modified 03/06/2006
Version 1.5 PDF File ID: 637629
Report generated 12/01/2006 16:00

METHOD BLANK SUMMARY

00095797

Login Number: L0611537
Work Group: WG228430
Blank File ID: 8M332397
Blank Sample ID: WG228430-01
Date Analyzed: 11/29/06
Instrument ID: HPMS8
Time Analyzed: 09:52
Method: 8260B
Analyst: CMS

This Method Blank Applies To The Following Samples:

Client ID	Lab Sample ID	Lab File ID	Time Analyzed	TAG
LCS	WG228430-06	8M332398	11/29/06 10:22	01
LCS	WG228430-02	8M332399	11/29/06 10:52	01
LAP-29WW35-2ND	L0611537-01	8M332400	11/29/06 11:23	DL01
LAP-29WW36-2ND	L0611537-02	8M332403	11/29/06 12:54	02
FBLK	WG228430-10	8M332408	11/29/06 15:25	01

METHOD BLANK SUMMARY

00095798

Login Number: L0611537
Work Group: WG228433
Blank File ID: 6M62272
Blank Sample ID: WG228433-01
Date Analyzed: 11/29/06
Instrument ID: HPMS6
Time Analyzed: 09:05
Method: 8260B
Analyst: CMS

This Method Blank Applies To The Following Samples:

Client ID	Lab Sample ID	Lab File ID	Time Analyzed	TAG
LCS	WG228433-02	6M62273	11/29/06 09:38	01
LCS2	WG228433-03	6M62274	11/29/06 10:10	01
LAP-29WW38-2ND	L0611537-04	6M62278	11/29/06 12:20	02
LAP-29WW39-2ND	L0611537-05	6M62279	11/29/06 12:53	02

KEMRON Environmental Services

METHOD BLANK REPORT

00095799

Login Number: L0611537 Run Date: 11/29/2006 Sample ID: WG228433-01
Instrument ID: HPMS6 Run Time: 09:05 Prep Method: 5030B
File ID: 6M62272 Analyst: CMS Method: 8260B
Workgroup (AAB#): WG228433 Matrix: Water Units: ug/L
Contract #: DACA56-94-D-0020 Cal ID: HPMS6-20-NOV-06

Analytes	SQL	PQL	Concentration	Dilution	Qualifier
Acetone	2.50	10.0	2.50	1	U
Benzene	0.125	1.00	0.125	1	U
Bromobenzene	0.125	1.00	0.125	1	U
Bromochloromethane	0.200	1.00	0.200	1	U
Bromodichloromethane	0.250	1.00	0.250	1	U
Bromoform	0.500	1.00	0.500	1	U
Bromomethane	0.500	1.00	0.500	1	U
2-Butanone	2.50	10.0	2.50	1	U
n-Butylbenzene	0.250	1.00	0.250	1	U
sec-Butylbenzene	0.250	1.00	0.250	1	U
tert-Butylbenzene	0.250	1.00	0.250	1	U
Carbon disulfide	0.500	1.00	0.500	1	U
Carbon tetrachloride	0.250	1.00	0.250	1	U
Chlorobenzene	0.125	1.00	0.125	1	U
Chlorodibromomethane	0.250	1.00	0.250	1	U
Chloroethane	0.500	1.00	0.500	1	U
2-Chloroethyl vinyl ether	2.00	10.0	2.00	1	U
Chloroform	0.125	1.00	0.125	1	U
Chloromethane	0.250	1.00	0.250	1	U
2-Chlorotoluene	0.125	1.00	0.125	1	U
4-Chlorotoluene	0.250	1.00	0.250	1	U
1,2-Dibromo-3-chloropropane	1.00	5.00	1.00	1	U
1,2-Dibromoethane	0.250	1.00	0.250	1	U
Dibromomethane	0.250	1.00	0.250	1	U
1,2-Dichlorobenzene	0.125	1.00	0.125	1	U
1,3-Dichlorobenzene	0.250	1.00	0.250	1	U
1,4-Dichlorobenzene	0.125	1.00	0.125	1	U
Dichlorodifluoromethane	0.250	1.00	0.250	1	U
1,1-Dichloroethane	0.125	1.00	0.125	1	U
1,2-Dichloroethane	0.250	1.00	0.250	1	U
1,1-Dichloroethene	0.500	1.00	0.500	1	U
cis-1,2-Dichloroethene	0.250	1.00	0.250	1	U
trans-1,2-Dichloroethene	0.250	1.00	0.250	1	U
1,2-Dichloropropane	0.200	1.00	0.200	1	U
1,3-Dichloropropane	0.200	1.00	0.200	1	U
2,2-Dichloropropane	0.250	1.00	0.250	1	U
cis-1,3-Dichloropropene	0.250	1.00	0.250	1	U
trans-1,3-Dichloropropene	0.500	1.00	0.500	1	U
1,1-Dichloropropene	0.250	1.00	0.250	1	U
Ethylbenzene	0.250	1.00	0.250	1	U
2-Hexanone	2.50	10.0	2.50	1	U
Hexachlorobutadiene	0.250	1.00	0.250	1	U

KEMRON FORMS - Modified 10/30/2006
Version 1.5 PDF File ID: 637630
Report generated 12/01/2006 16:01

KEMRON Environmental Services

METHOD BLANK REPORT

00095800

Login Number: L0611537 Run Date: 11/29/2006 Sample ID: WG228433-01
Instrument ID: HPMS6 Run Time: 09:05 Prep Method: 5030B
File ID: 6M62272 Analyst: CMS Method: 8260B
Workgroup (AAB#): WG228433 Matrix: Water Units: ug/L
Contract #: DACA56-94-D-0020 Cal ID: HPMS6-20-NOV-06

Analytes	SQL	PQL	Concentration	Dilution	Qualifier
Isopropylbenzene	0.250	1.00	0.250	1	U
p-Isopropyltoluene	0.250	1.00	0.250	1	U
4-Methyl-2-pentanone	2.50	10.0	2.50	1	U
Methylene chloride	0.250	5.00	0.250	1	U
Naphthalene	0.200	1.00	0.218	1	J
n-Propylbenzene	0.125	1.00	0.125	1	U
Styrene	0.125	1.00	0.125	1	U
1,1,1,2-Tetrachloroethane	0.250	1.00	0.250	1	U
1,1,2,2-Tetrachloroethane	0.125	1.00	0.125	1	U
Tetrachloroethene	0.250	1.00	0.250	1	U
Toluene	0.250	1.00	0.250	1	U
1,2,3-Trichlorobenzene	0.125	1.00	0.211	1	J
1,2,4-Trichlorobenzene	0.200	1.00	0.200	1	U
1,1,1-Trichloroethane	0.250	1.00	0.250	1	U
1,1,2-Trichloroethane	0.250	1.00	0.250	1	U
Trichloroethene	0.250	1.00	0.250	1	U
Trichlorofluoromethane	0.250	1.00	0.250	1	U
1,2,3-Trichloropropane	0.500	1.00	0.500	1	U
1,2,4-Trimethylbenzene	0.250	1.00	0.250	1	U
1,3,5-Trimethylbenzene	0.250	1.00	0.250	1	U
Vinyl acetate	2.50	10.0	2.50	1	U
Vinyl chloride	0.250	1.00	0.250	1	U
o-Xylene	0.250	1.00	0.250	1	U
m-,p-Xylene	0.500	1.00	0.500	1	U

Surrogates	% Recovery	Surrogate Limits	Qualifier
Dibromofluoromethane	91.9	86 - 118	PASS
1,2-Dichloroethane-d4	82.5	80 - 120	PASS
Toluene-d8	98.6	88 - 110	PASS
4-Bromofluorobenzene	92.7	86 - 115	PASS

MDL Method Detection Limit
RL Reporting/quantitation Limit

* Analyte concentration > RL

KEMRON FORMS - Modified 10/30/2006
Version 1.5 PDF File ID: 637630
Report generated 12/01/2006 16:01

KEMRON Environmental Services

METHOD BLANK REPORT

00095801

Login Number: L0611537 Run Date: 11/28/2006 Sample ID: WG228326-01
Instrument ID: HPMS8 Run Time: 07:59 Prep Method: 5030B
File ID: 8M332370 Analyst: CMS Method: 8260B
Workgroup (AAB#): WG228326 Matrix: Water Units: ug/L
Contract #: DACA56-94-D-0020 Cal ID: HPMS8-03-NOV-06

Analytes	SQL	PQL	Concentration	Dilution	Qualifier
Acetone	2.50	10.0	2.50	1	U
Benzene	0.125	1.00	0.125	1	U
Bromobenzene	0.125	1.00	0.125	1	U
Bromochloromethane	0.200	1.00	0.200	1	U
Bromodichloromethane	0.250	1.00	0.250	1	U
Bromoform	0.500	1.00	0.500	1	U
Bromomethane	0.500	1.00	0.500	1	U
2-Butanone	2.50	10.0	2.50	1	U
n-Butylbenzene	0.250	1.00	0.250	1	U
sec-Butylbenzene	0.250	1.00	0.250	1	U
tert-Butylbenzene	0.250	1.00	0.250	1	U
Carbon disulfide	0.500	1.00	0.500	1	U
Carbon tetrachloride	0.250	1.00	0.250	1	U
Chlorobenzene	0.125	1.00	0.125	1	U
Chlorodibromomethane	0.250	1.00	0.250	1	U
Chloroethane	0.500	1.00	0.500	1	U
2-Chloroethyl vinyl ether	2.00	10.0	2.00	1	U
Chloroform	0.125	1.00	0.125	1	U
Chloromethane	0.250	1.00	0.250	1	U
2-Chlorotoluene	0.125	1.00	0.125	1	U
4-Chlorotoluene	0.250	1.00	0.250	1	U
1,2-Dibromo-3-chloropropane	1.00	5.00	1.00	1	U
1,2-Dibromoethane	0.250	1.00	0.250	1	U
Dibromomethane	0.250	1.00	0.250	1	U
1,2-Dichlorobenzene	0.125	1.00	0.125	1	U
1,3-Dichlorobenzene	0.250	1.00	0.250	1	U
1,4-Dichlorobenzene	0.125	1.00	0.125	1	U
Dichlorodifluoromethane	0.250	1.00	0.250	1	U
1,1-Dichloroethane	0.125	1.00	0.125	1	U
1,2-Dichloroethane	0.250	1.00	0.250	1	U
1,1-Dichloroethene	0.500	1.00	0.500	1	U
cis-1,2-Dichloroethene	0.250	1.00	0.250	1	U
trans-1,2-Dichloroethene	0.250	1.00	0.250	1	U
1,2-Dichloropropane	0.200	1.00	0.200	1	U
1,3-Dichloropropane	0.200	1.00	0.200	1	U
2,2-Dichloropropane	0.250	1.00	0.250	1	U
cis-1,3-Dichloropropene	0.250	1.00	0.250	1	U
trans-1,3-Dichloropropene	0.500	1.00	0.500	1	U
1,1-Dichloropropene	0.250	1.00	0.250	1	U
Ethylbenzene	0.250	1.00	0.250	1	U
2-Hexanone	2.50	10.0	2.50	1	U
Hexachlorobutadiene	0.250	1.00	0.250	1	U

KEMRON FORMS - Modified 10/30/2006
Version 1.5 PDF File ID: 637630
Report generated 12/01/2006 16:01

KEMRON Environmental Services

METHOD BLANK REPORT

00095802

Login Number: L0611537 Run Date: 11/28/2006 Sample ID: WG228326-01
Instrument ID: HPMS8 Run Time: 07:59 Prep Method: 5030B
File ID: 8M332370 Analyst: CMS Method: 8260B
Workgroup (AAB#): WG228326 Matrix: Water Units: ug/L
Contract #: DACA56-94-D-0020 Cal ID: HPMS8-03-NOV-06

Analytes	SQL	PQL	Concentration	Dilution	Qualifier
Isopropylbenzene	0.250	1.00	0.250	1	U
p-Isopropyltoluene	0.250	1.00	0.250	1	U
4-Methyl-2-pentanone	2.50	10.0	2.50	1	U
Methylene chloride	0.250	5.00	0.250	1	U
Naphthalene	0.200	1.00	0.200	1	U
n-Propylbenzene	0.125	1.00	0.125	1	U
Styrene	0.125	1.00	0.125	1	U
1,1,1,2-Tetrachloroethane	0.250	1.00	0.250	1	U
1,1,2,2-Tetrachloroethane	0.125	1.00	0.125	1	U
Tetrachloroethene	0.250	1.00	0.250	1	U
Toluene	0.250	1.00	0.250	1	U
1,2,3-Trichlorobenzene	0.125	1.00	0.125	1	U
1,2,4-Trichlorobenzene	0.200	1.00	0.200	1	U
1,1,1-Trichloroethane	0.250	1.00	0.250	1	U
1,1,2-Trichloroethane	0.250	1.00	0.250	1	U
Trichloroethene	0.250	1.00	0.250	1	U
Trichlorofluoromethane	0.250	1.00	0.250	1	U
1,2,3-Trichloropropane	0.500	1.00	0.500	1	U
1,2,4-Trimethylbenzene	0.250	1.00	0.250	1	U
1,3,5-Trimethylbenzene	0.250	1.00	0.250	1	U
Vinyl acetate	2.50	10.0	2.50	1	U
Vinyl chloride	0.250	1.00	0.250	1	U
o-Xylene	0.250	1.00	0.250	1	U
m-,p-Xylene	0.500	1.00	0.500	1	U

Surrogates	% Recovery	Surrogate Limits	Qualifier
Dibromofluoromethane	96.6	86 - 118	PASS
1,2-Dichloroethane-d4	102	80 - 120	PASS
Toluene-d8	96.5	88 - 110	PASS
4-Bromofluorobenzene	93.6	86 - 115	PASS

MDL Method Detection Limit
RL Reporting/quantitation Limit

* Analyte concentration > RL

KEMRON FORMS - Modified 10/30/2006
Version 1.5 PDF File ID: 637630
Report generated 12/01/2006 16:01

KEMRON Environmental Services

METHOD BLANK REPORT

00095803

Login Number: L0611537 Run Date: 11/29/2006 Sample ID: WG228430-01
Instrument ID: HPMS8 Run Time: 09:52 Prep Method: 5030B
File ID: 8M332397 Analyst: CMS Method: 8260B
Workgroup (AAB#): WG228430 Matrix: Water Units: ug/L
Contract #: DACA56-94-D-0020 Cal ID: HPMS8-03-NOV-06

Analytes	SQL	PQL	Concentration	Dilution	Qualifier
Acetone	2.50	10.0	2.50	1	U
Benzene	0.125	1.00	0.125	1	U
Bromobenzene	0.125	1.00	0.125	1	U
Bromochloromethane	0.200	1.00	0.200	1	U
Bromodichloromethane	0.250	1.00	0.250	1	U
Bromoform	0.500	1.00	0.500	1	U
Bromomethane	0.500	1.00	0.500	1	U
2-Butanone	2.50	10.0	2.50	1	U
n-Butylbenzene	0.250	1.00	0.250	1	U
sec-Butylbenzene	0.250	1.00	0.250	1	U
tert-Butylbenzene	0.250	1.00	0.250	1	U
Carbon disulfide	0.500	1.00	0.500	1	U
Carbon tetrachloride	0.250	1.00	0.250	1	U
Chlorobenzene	0.125	1.00	0.125	1	U
Chlorodibromomethane	0.250	1.00	0.250	1	U
Chloroethane	0.500	1.00	0.500	1	U
2-Chloroethyl vinyl ether	2.00	10.0	2.00	1	U
Chloroform	0.125	1.00	0.125	1	U
Chloromethane	0.250	1.00	0.250	1	U
2-Chlorotoluene	0.125	1.00	0.125	1	U
4-Chlorotoluene	0.250	1.00	0.250	1	U
1,2-Dibromo-3-chloropropane	1.00	5.00	1.00	1	U
1,2-Dibromoethane	0.250	1.00	0.250	1	U
Dibromomethane	0.250	1.00	0.250	1	U
1,2-Dichlorobenzene	0.125	1.00	0.125	1	U
1,3-Dichlorobenzene	0.250	1.00	0.250	1	U
1,4-Dichlorobenzene	0.125	1.00	0.125	1	U
Dichlorodifluoromethane	0.250	1.00	0.250	1	U
1,1-Dichloroethane	0.125	1.00	0.125	1	U
1,2-Dichloroethane	0.250	1.00	0.250	1	U
1,1-Dichloroethene	0.500	1.00	0.500	1	U
cis-1,2-Dichloroethene	0.250	1.00	0.250	1	U
trans-1,2-Dichloroethene	0.250	1.00	0.250	1	U
1,2-Dichloropropane	0.200	1.00	0.200	1	U
1,3-Dichloropropane	0.200	1.00	0.200	1	U
2,2-Dichloropropane	0.250	1.00	0.250	1	U
cis-1,3-Dichloropropene	0.250	1.00	0.250	1	U
trans-1,3-Dichloropropene	0.500	1.00	0.500	1	U
1,1-Dichloropropene	0.250	1.00	0.250	1	U
Ethylbenzene	0.250	1.00	0.250	1	U
2-Hexanone	2.50	10.0	2.50	1	U
Hexachlorobutadiene	0.250	1.00	0.250	1	U

KEMRON FORMS - Modified 10/30/2006
Version 1.5 PDF File ID: 637630
Report generated 12/01/2006 16:01

KEMRON Environmental Services

METHOD BLANK REPORT

00095804

Login Number: L0611537 Run Date: 11/29/2006 Sample ID: WG228430-01
Instrument ID: HPMS8 Run Time: 09:52 Prep Method: 5030B
File ID: 8M332397 Analyst: CMS Method: 8260B
Workgroup (AAB#): WG228430 Matrix: Water Units: ug/L
Contract #: DACA56-94-D-0020 Cal ID: HPMS8-03-NOV-06

Analytes	SQL	PQL	Concentration	Dilution	Qualifier
Isopropylbenzene	0.250	1.00	0.250	1	U
p-Isopropyltoluene	0.250	1.00	0.250	1	U
4-Methyl-2-pentanone	2.50	10.0	2.50	1	U
Methylene chloride	0.250	5.00	0.250	1	U
Naphthalene	0.200	1.00	0.200	1	U
n-Propylbenzene	0.125	1.00	0.125	1	U
Styrene	0.125	1.00	0.125	1	U
1,1,1,2-Tetrachloroethane	0.250	1.00	0.250	1	U
1,1,2,2-Tetrachloroethane	0.125	1.00	0.125	1	U
Tetrachloroethene	0.250	1.00	0.250	1	U
Toluene	0.250	1.00	0.250	1	U
1,2,3-Trichlorobenzene	0.125	1.00	0.125	1	U
1,2,4-Trichlorobenzene	0.200	1.00	0.200	1	U
1,1,1-Trichloroethane	0.250	1.00	0.250	1	U
1,1,2-Trichloroethane	0.250	1.00	0.250	1	U
Trichloroethene	0.250	1.00	0.250	1	U
Trichlorofluoromethane	0.250	1.00	0.250	1	U
1,2,3-Trichloropropane	0.500	1.00	0.500	1	U
1,2,4-Trimethylbenzene	0.250	1.00	0.250	1	U
1,3,5-Trimethylbenzene	0.250	1.00	0.250	1	U
Vinyl acetate	2.50	10.0	2.50	1	U
Vinyl chloride	0.250	1.00	0.250	1	U
o-Xylene	0.250	1.00	0.250	1	U
m-,p-Xylene	0.500	1.00	0.500	1	U

Surrogates	% Recovery	Surrogate Limits	Qualifier
Dibromofluoromethane	94.8	86 - 118	PASS
1,2-Dichloroethane-d4	102	80 - 120	PASS
Toluene-d8	97.2	88 - 110	PASS
4-Bromofluorobenzene	94.6	86 - 115	PASS

MDL Method Detection Limit
RL Reporting/quantitation Limit

* Analyte concentration > RL

KEMRON FORMS - Modified 10/30/2006
Version 1.5 PDF File ID: 637630
Report generated 12/01/2006 16:01

KEMRON Environmental Services

LABORATORY CONTROL SAMPLE (LCS)

00095805

Login Number: L0611537 Run Date: 11/28/2006 Sample ID: WG228326-02
Instrument ID: HPMS8 Run Time: 08:30 Prep Method: 5030B
File ID: 8M332371 Analyst: CMS Method: 8260B
Workgroup (AAB#): WG228326 Matrix: Water Units: ug/L
Contract #: DACA56-94-D-0020 Cal ID: HPMS8-03-NOV-06

Analytes	Expected	Found	% Rec	LCS Limits	Q
Acetone	20.0	25.1	125	40 - 142	
Benzene	20.0	19.8	99.2	80 - 121	
Bromobenzene	20.0	19.4	97.0	80 - 120	
Bromochloromethane	20.0	21.0	105	65 - 130	
Bromodichloromethane	20.0	23.5	118	80 - 131	
Bromoform	20.0	20.5	102	70 - 130	
Bromomethane	20.0	19.2	96.2	30 - 145	
2-Butanone	20.0	21.4	107	30 - 150	
n-Butylbenzene	20.0	19.7	98.3	80 - 131	
sec-Butylbenzene	20.0	19.6	97.8	80 - 127	
tert-Butylbenzene	20.0	18.8	93.8	80 - 126	
Carbon disulfide	20.0	21.1	106	58 - 138	
Carbon tetrachloride	20.0	23.8	119	65 - 140	
Chlorobenzene	20.0	19.8	99.0	80 - 120	
Chlorodibromomethane	20.0	21.9	110	60 - 135	
Chloroethane	20.0	18.2	91.0	60 - 135	
2-Chloroethyl vinyl ether	20.0	17.4	86.8	58 - 151	
Chloroform	20.0	21.6	108	80 - 125	
Chloromethane	20.0	23.4	117	40 - 125	
2-Chlorotoluene	20.0	19.2	96.0	80 - 127	
4-Chlorotoluene	20.0	20.5	103	80 - 126	
1,2-Dibromo-3-chloropropane	20.0	19.4	97.0	50 - 130	
1,2-Dibromoethane	20.0	19.9	99.7	80 - 125	
Dibromomethane	20.0	21.5	108	75 - 125	
1,2-Dichlorobenzene	20.0	18.7	93.4	80 - 125	
1,3-Dichlorobenzene	20.0	19.2	96.2	80 - 120	
1,4-Dichlorobenzene	20.0	18.6	92.8	80 - 120	
Dichlorodifluoromethane	20.0	19.7	98.3	50 - 133	
1,1-Dichloroethane	20.0	20.3	101	80 - 125	
1,2-Dichloroethane	20.0	23.1	116	80 - 129	
1,1-Dichloroethene	20.0	22.3	111	80 - 132	
cis-1,2-Dichloroethene	20.0	19.6	98.0	70 - 125	
trans-1,2-Dichloroethene	20.0	20.6	103	80 - 127	
1,2-Dichloropropane	20.0	19.5	97.4	80 - 120	
1,3-Dichloropropane	20.0	20.0	100	80 - 120	
2,2-Dichloropropane	20.0	24.1	121	80 - 133	
cis-1,3-Dichloropropene	20.0	21.3	107	70 - 130	
trans-1,3-Dichloropropene	20.0	19.1	95.6	80 - 130	
1,1-Dichloropropene	20.0	21.7	108	75 - 130	
Ethylbenzene	20.0	19.8	98.8	80 - 122	
2-Hexanone	20.0	18.1	90.3	55 - 130	

KEMRON FORMS - Modified 10/30/2006
Version 1.5 PDF File ID: 637626
Report generated 12/04/2006 08:57

KEMRON Environmental Services

LABORATORY CONTROL SAMPLE (LCS)

00095806

Login Number: L0611537 Run Date: 11/28/2006 Sample ID: WG228326-02
Instrument ID: HPMS8 Run Time: 08:30 Prep Method: 5030B
File ID: 8M332371 Analyst: CMS Method: 8260B
Workgroup (AAB#): WG228326 Matrix: Water Units: ug/L
Contract #: DACA56-94-D-0020 Cal ID: HPMS8-03-NOV-06

Analytes	Expected	Found	% Rec	LCS Limits	Q
Hexachlorobutadiene	20.0	21.1	106	72 - 132	
Isopropylbenzene	20.0	19.0	95.0	80 - 122	
p-Isopropyltoluene	20.0	19.4	96.9	80 - 122	
4-Methyl-2-pentanone	20.0	20.4	102	64 - 140	
Methylene chloride	20.0	18.4	92.0	80 - 123	
Naphthalene	20.0	18.0	89.8	59 - 149	
n-Propylbenzene	20.0	19.8	99.1	80 - 129	
Styrene	20.0	20.8	104	80 - 123	
1,1,1,2-Tetrachloroethane	20.0	21.3	107	80 - 130	
1,1,2,2-Tetrachloroethane	20.0	17.3	86.5	79 - 125	
Tetrachloroethene	20.0	20.4	102	80 - 124	
Toluene	20.0	19.5	97.7	80 - 124	
1,2,3-Trichlorobenzene	20.0	17.7	88.4	55 - 140	
1,2,4-Trichlorobenzene	20.0	18.6	93.1	65 - 135	
1,1,1-Trichloroethane	20.0	23.8	119	80 - 134	
1,1,2-Trichloroethane	20.0	20.3	101	80 - 125	
Trichloroethene	20.0	20.7	103	80 - 122	
Trichlorofluoromethane	20.0	21.6	108	62 - 151	
1,2,3-Trichloropropane	20.0	19.1	95.5	75 - 125	
1,2,4-Trimethylbenzene	20.0	19.7	98.6	80 - 125	
1,3,5-Trimethylbenzene	20.0	20.1	101	80 - 127	
Vinyl acetate	20.0	21.5	107	10 - 150	
Vinyl chloride	20.0	22.8	114	65 - 140	
o-Xylene	20.0	19.6	97.8	80 - 122	
m-,p-Xylene	40.0	40.2	100	80 - 122	

Surrogates	% Recovery	Surrogate Limits	Qualifier
Dibromofluoromethane	95.5	86 - 118	PASS
1,2-Dichloroethane-d4	101	80 - 120	PASS
Toluene-d8	94.2	88 - 110	PASS
4-Bromofluorobenzene	93.1	86 - 115	PASS

* FAILS %REC LIMIT

KEMRON FORMS - Modified 10/30/2006
Version 1.5 PDF File ID: 637626
Report generated 12/04/2006 08:57

KEMRON Environmental Services

LABORATORY CONTROL SAMPLE (LCS)

00095807

Login Number: L0611537 Run Date: 11/29/2006 Sample ID: WG228430-02
Instrument ID: HPMS8 Run Time: 10:52 Prep Method: 5030B
File ID: 8M332399 Analyst: CMS Method: 8260B
Workgroup (AAB#): WG228430 Matrix: Water Units: ug/L
Contract #: DACA56-94-D-0020 Cal ID: HPMS8-03-NOV-06

Analytes	Expected	Found	% Rec	LCS Limits	Q
Acetone	20.0	23.2	116	40 - 142	
Benzene	20.0	20.2	101	80 - 121	
Bromobenzene	20.0	20.9	105	80 - 120	
Bromochloromethane	20.0	21.1	106	65 - 130	
Bromodichloromethane	20.0	24.2	121	80 - 131	
Bromoform	20.0	21.9	110	70 - 130	
Bromomethane	20.0	19.7	98.3	30 - 145	
2-Butanone	20.0	20.9	104	30 - 150	
n-Butylbenzene	20.0	21.1	106	80 - 131	
sec-Butylbenzene	20.0	21.0	105	80 - 127	
tert-Butylbenzene	20.0	19.9	99.7	80 - 126	
Carbon disulfide	20.0	20.3	102	58 - 138	
Carbon tetrachloride	20.0	25.0	125	65 - 140	
Chlorobenzene	20.0	21.3	106	80 - 120	
Chlorodibromomethane	20.0	23.7	118	60 - 135	
Chloroethane	20.0	18.3	91.4	60 - 135	
2-Chloroethyl vinyl ether	20.0	17.7	88.6	58 - 151	
Chloroform	20.0	22.6	113	80 - 125	
Chloromethane	20.0	25.1	126	40 - 125	*
2-Chlorotoluene	20.0	20.6	103	80 - 127	
4-Chlorotoluene	20.0	20.7	104	80 - 126	
1,2-Dibromo-3-chloropropane	20.0	19.9	99.3	50 - 130	
1,2-Dibromoethane	20.0	21.1	105	80 - 125	
Dibromomethane	20.0	22.7	113	75 - 125	
1,2-Dichlorobenzene	20.0	20.0	100	80 - 125	
1,3-Dichlorobenzene	20.0	20.7	104	80 - 120	
1,4-Dichlorobenzene	20.0	20.0	99.8	80 - 120	
Dichlorodifluoromethane	20.0	19.3	96.5	50 - 133	
1,1-Dichloroethane	20.0	21.2	106	80 - 125	
1,2-Dichloroethane	20.0	24.6	123	80 - 129	
1,1-Dichloroethene	20.0	22.7	114	80 - 132	
cis-1,2-Dichloroethene	20.0	20.8	104	70 - 125	
trans-1,2-Dichloroethene	20.0	20.9	105	80 - 127	
1,2-Dichloropropane	20.0	20.2	101	80 - 120	
1,3-Dichloropropane	20.0	20.9	104	80 - 120	
2,2-Dichloropropane	20.0	25.1	125	80 - 133	
cis-1,3-Dichloropropene	20.0	21.9	110	70 - 130	
trans-1,3-Dichloropropene	20.0	20.3	102	80 - 130	
1,1-Dichloropropene	20.0	22.5	112	75 - 130	
Ethylbenzene	20.0	20.7	104	80 - 122	
2-Hexanone	20.0	18.4	91.9	55 - 130	

KEMRON FORMS - Modified 10/30/2006
Version 1.5 PDF File ID: 637626
Report generated 12/04/2006 08:57

KEMRON Environmental Services

LABORATORY CONTROL SAMPLE (LCS)

00095808

Login Number: L0611537 Run Date: 11/29/2006 Sample ID: WG228430-02
Instrument ID: HPMS8 Run Time: 10:52 Prep Method: 5030B
File ID: 8M332399 Analyst: CMS Method: 8260B
Workgroup (AAB#): WG228430 Matrix: Water Units: ug/L
Contract #: DACA56-94-D-0020 Cal ID: HPMS8-03-NOV-06

Analytes	Expected	Found	% Rec	LCS Limits	Q
Hexachlorobutadiene	20.0	22.5	113	72 - 132	
Isopropylbenzene	20.0	20.2	101	80 - 122	
p-Isopropyltoluene	20.0	20.9	105	80 - 122	
4-Methyl-2-pentanone	20.0	19.2	95.9	64 - 140	
Methylene chloride	20.0	19.2	96.0	80 - 123	
Naphthalene	20.0	18.6	92.9	59 - 149	
n-Propylbenzene	20.0	21.4	107	80 - 129	
Styrene	20.0	22.1	110	80 - 123	
1,1,1,2-Tetrachloroethane	20.0	23.2	116	80 - 130	
1,1,2,2-Tetrachloroethane	20.0	18.7	93.5	79 - 125	
Tetrachloroethene	20.0	21.9	110	80 - 124	
Toluene	20.0	20.9	104	80 - 124	
1,2,3-Trichlorobenzene	20.0	18.5	92.6	55 - 140	
1,2,4-Trichlorobenzene	20.0	19.4	97.0	65 - 135	
1,1,1-Trichloroethane	20.0	24.7	123	80 - 134	
1,1,2-Trichloroethane	20.0	21.2	106	80 - 125	
Trichloroethene	20.0	21.4	107	80 - 122	
Trichlorofluoromethane	20.0	22.3	112	62 - 151	
1,2,3-Trichloropropane	20.0	20.7	103	75 - 125	
1,2,4-Trimethylbenzene	20.0	21.4	107	80 - 125	
1,3,5-Trimethylbenzene	20.0	21.7	109	80 - 127	
Vinyl acetate	20.0	20.1	101	10 - 150	
Vinyl chloride	20.0	23.4	117	65 - 140	
o-Xylene	20.0	20.9	104	80 - 122	
m-,p-Xylene	40.0	42.8	107	80 - 122	

Surrogates	% Recovery	Surrogate Limits	Qualifier
Dibromofluoromethane	95.2	86 - 118	PASS
1,2-Dichloroethane-d4	99.3	80 - 120	PASS
Toluene-d8	95.6	88 - 110	PASS
4-Bromofluorobenzene	94.8	86 - 115	PASS

* FAILS %REC LIMIT

KEMRON FORMS - Modified 10/30/2006
Version 1.5 PDF File ID: 637626
Report generated 12/04/2006 08:57

KEMRON Environmental Services

LABORATORY CONTROL SAMPLE (LCS)

00095809

Login Number:L0611537 Analyst:CMS Prep Method:5030B
Instrument ID:HPMS6 Matrix:Water Method:8260B
Workgroup (AAB#):WG228433 Units:ug/L
Sample ID:WG228433-02 LCS File ID:6M62273 Run Date:11/29/2006 09:38
Sample ID:WG228433-03 LCS2 File ID:6M62274 Run Date:11/29/2006 10:10

Analytes	LCS			LCS2			%RPD	%Rec Limits	RPD Lmt	Q
	Known	Found	% REC	Known	Found	% REC				
Acetone	20.0	21.1	105	20.0	21.6	108	2.67	40 - 142	20	
Benzene	20.0	20.4	102	20.0	20.8	104	2.25	80 - 121	20	
Bromobenzene	20.0	20.0	100	20.0	20.6	103	2.70	80 - 120	20	
Bromochloromethane	20.0	21.0	105	20.0	21.3	106	1.39	65 - 130	20	
Bromodichloromethane	20.0	20.9	105	20.0	21.6	108	3.01	80 - 131	20	
Bromoform	20.0	20.5	103	20.0	21.0	105	2.43	70 - 130	20	
Bromomethane	20.0	16.1	80.4	20.0	17.1	85.7	6.36	30 - 145	20	
2-Butanone	20.0	21.5	107	20.0	21.8	109	1.35	30 - 150	20	
n-Butylbenzene	20.0	20.6	103	20.0	21.5	107	4.20	80 - 131	20	
sec-Butylbenzene	20.0	20.4	102	20.0	21.4	107	4.71	80 - 127	20	
tert-Butylbenzene	20.0	20.5	102	20.0	21.4	107	4.47	80 - 126	20	
Carbon disulfide	20.0	19.9	99.4	20.0	20.7	104	4.28	58 - 138	20	
Carbon tetrachloride	20.0	20.6	103	20.0	21.5	108	4.55	65 - 140	20	
Chlorobenzene	20.0	20.1	100	20.0	20.9	104	4.02	80 - 120	20	
Chlorodibromomethane	20.0	21.2	106	20.0	21.7	108	2.38	60 - 135	20	
Chloroethane	20.0	18.5	92.3	20.0	18.8	93.8	1.62	60 - 135	20	
2-Chloroethyl vinyl ether	20.0	19.0	94.8	20.0	21.0	105	10.1	58 - 151	20	
Chloroform	20.0	19.7	98.7	20.0	20.1	100	1.68	80 - 125	20	
Chloromethane	20.0	17.6	87.8	20.0	18.3	91.3	3.98	40 - 125	20	
2-Chlorotoluene	20.0	19.2	96.0	20.0	20.4	102	5.92	80 - 127	20	
4-Chlorotoluene	20.0	20.0	99.9	20.0	20.5	103	2.62	80 - 126	20	
1,2-Dibromo-3-chloropropane	20.0	21.3	106	20.0	20.5	103	3.62	50 - 130	20	
1,2-Dibromoethane	20.0	20.5	103	20.0	21.3	106	3.63	80 - 125	20	
Dibromomethane	20.0	20.4	102	20.0	20.9	104	2.15	75 - 125	20	
1,2-Dichlorobenzene	20.0	19.9	99.6	20.0	20.5	103	3.02	80 - 125	20	
1,3-Dichlorobenzene	20.0	19.9	99.3	20.0	20.5	103	3.33	80 - 120	20	
1,4-Dichlorobenzene	20.0	19.6	98.0	20.0	20.6	103	4.93	80 - 120	20	
Dichlorodifluoromethane	20.0	16.6	83.1	20.0	17.3	86.7	4.18	50 - 133	20	
1,1-Dichloroethane	20.0	20.3	101	20.0	21.3	107	5.12	80 - 125	20	
1,2-Dichloroethane	20.0	19.7	98.3	20.0	19.9	99.4	1.15	80 - 129	20	
1,1-Dichloroethene	20.0	19.7	98.4	20.0	20.5	103	4.11	80 - 132	20	
cis-1,2-Dichloroethene	20.0	20.4	102	20.0	21.1	105	3.37	70 - 125	20	
trans-1,2-Dichloroethene	20.0	20.0	99.8	20.0	20.5	103	2.71	80 - 127	20	
1,2-Dichloropropane	20.0	20.5	103	20.0	21.0	105	2.05	80 - 120	20	
1,3-Dichloropropane	20.0	20.4	102	20.0	21.0	105	2.83	80 - 120	20	
2,2-Dichloropropane	20.0	21.1	105	20.0	21.6	108	2.58	80 - 133	20	
cis-1,3-Dichloropropene	20.0	21.3	106	20.0	21.4	107	0.569	70 - 130	20	
trans-1,3-Dichloropropene	20.0	19.4	97.0	20.0	19.9	99.3	2.33	80 - 130	20	
1,1-Dichloropropene	20.0	20.8	104	20.0	21.4	107	2.99	75 - 130	20	
Ethylbenzene	20.0	20.1	101	20.0	21.1	106	4.84	80 - 122	20	
2-Hexanone	20.0	18.6	92.8	20.0	18.9	94.4	1.75	55 - 130	20	
Hexachlorobutadiene	20.0	23.3	116	20.0	24.5	122	5.03	72 - 132	20	

KEMRON FORMS - Modified 07/13/2006
Version 1.5 PDF File ID:638917
Report generated 12/01/2006 16:01

KEMRON Environmental Services

LABORATORY CONTROL SAMPLE (LCS)

00095810

Login Number: L0611537 Analyst: CMS Prep Method: 5030B
Instrument ID: HPMS6 Matrix: Water Method: 8260B
Workgroup (AAB#): WG228433 Units: ug/L
Sample ID: WG228433-02 LCS File ID: 6M62273 Run Date: 11/29/2006 09:38
Sample ID: WG228433-03 LCS2 File ID: 6M62274 Run Date: 11/29/2006 10:10

Analytes	LCS			LCS2			%RPD	%Rec Limits	RPD Lmt	Q
	Known	Found	% REC	Known	Found	% REC				
Isopropylbenzene	20.0	18.4	92.1	20.0	19.6	97.8	5.94	80 - 122	20	
p-Isopropyltoluene	20.0	20.0	100	20.0	20.6	103	3.23	80 - 122	20	
4-Methyl-2-pentanone	20.0	20.7	104	20.0	20.7	103	0.202	64 - 140	20	
Methylene chloride	20.0	19.0	94.9	20.0	19.1	95.5	0.655	80 - 123	20	
Naphthalene	20.0	21.9	110	20.0	22.3	111	1.42	59 - 149	20	
n-Propylbenzene	20.0	20.0	100	20.0	20.8	104	3.76	80 - 129	20	
Styrene	20.0	20.7	103	20.0	21.4	107	3.24	80 - 123	20	
1,1,1,2-Tetrachloroethane	20.0	20.5	102	20.0	21.4	107	4.62	80 - 130	20	
1,1,2,2-Tetrachloroethane	20.0	20.3	101	20.0	20.6	103	1.70	79 - 125	20	
Tetrachloroethene	20.0	20.4	102	20.0	21.1	106	3.74	80 - 124	20	
Toluene	20.0	19.8	98.8	20.0	20.6	103	4.02	80 - 124	20	
1,2,3-Trichlorobenzene	20.0	21.5	107	20.0	22.2	111	3.29	55 - 140	20	
1,2,4-Trichlorobenzene	20.0	21.1	106	20.0	21.8	109	3.24	65 - 135	20	
1,1,1-Trichloroethane	20.0	20.4	102	20.0	21.2	106	3.87	80 - 134	20	
1,1,2-Trichloroethane	20.0	21.5	107	20.0	21.9	109	2.06	80 - 125	20	
Trichloroethene	20.0	21.0	105	20.0	22.0	110	4.62	80 - 122	20	
Trichlorofluoromethane	20.0	17.1	85.6	20.0	17.7	88.5	3.40	62 - 151	20	
1,2,3-Trichloropropane	20.0	20.2	101	20.0	20.7	103	2.28	75 - 125	20	
1,2,4-Trimethylbenzene	20.0	19.7	98.5	20.0	20.4	102	3.28	80 - 125	20	
1,3,5-Trimethylbenzene	20.0	20.3	102	20.0	20.9	104	2.79	80 - 127	20	
Vinyl acetate	20.0	17.5	87.6	20.0	16.6	83.0	5.42	10 - 150	20	
Vinyl chloride	20.0	20.8	104	20.0	21.3	107	2.61	65 - 140	20	
o-Xylene	20.0	19.7	98.7	20.0	20.7	103	4.74	80 - 122	20	
m-,p-Xylene	40.0	39.4	98.5	40.0	41.7	104	5.75	80 - 122	20	

Surogates	LCS	LCS2	Surrogate Limits	Qualifier
	% Recovery	% Recovery		
Dibromofluoromethane	94.6	93.7	86 - 118	PASS
1,2-Dichloroethane-d4	85.7	85.1	80 - 120	PASS
Toluene-d8	98.5	99.0	88 - 110	PASS
4-Bromofluorobenzene	92.5	93.4	86 - 115	PASS

* FAILS %REC LIMIT

\# FAILS RPD LIMIT

KEMRON FORMS - Modified 07/13/2006
Version 1.5 PDF File ID: 638917
Report generated 12/01/2006 16:01

KEMRON Environmental Services

MS/MSD REPORT

00095811

Loginnum:L0611537 Cal ID: HPMS8-03-NOV-06 Worknum:WG228326
Instrument ID:HPMS8 Contract #:DACA56-94-D-0020 Prep Method:5030B
Parent ID:L0611537-06 File ID:8M332375 Dil:1 Method:8260B
Sample ID:L0611537-08 MS File ID:8M332376 Dil:1 Matrix:Water
Sample ID:L0611537-09 MSD File ID:8M332377 Dil:1 Units:ug/L

Analyte	Parent	MS Spiked	MS Found	MS %Rec	MSD Spiked	MSD Found	MSD %Rec	%RPD	%Rec Limits	RPD Limit	Q
Acetone	ND	20.0	22.3	112	20.0	23.7	119	6.13	40 - 142	20	
Benzene	ND	20.0	21.0	105	20.0	20.8	104	1.38	80 - 121	20	
Bromobenzene	ND	20.0	20.7	103	20.0	20.1	100	2.98	80 - 120	20	
Bromochloromethane	ND	20.0	22.8	114	20.0	22.2	111	2.94	65 - 130	20	
Bromodichloromethane	ND	20.0	25.5	127	20.0	24.9	124	2.26	80 - 131	20	
Bromoform	ND	20.0	22.1	110	20.0	22.4	112	1.37	70 - 130	20	
Bromomethane	ND	20.0	20.5	102	20.0	20.3	102	0.698	30 - 145	20	
2-Butanone	ND	20.0	20.7	103	20.0	21.6	108	4.30	30 - 150	20	
n-Butylbenzene	ND	20.0	20.4	102	20.0	19.9	99.6	2.57	80 - 131	20	
sec-Butylbenzene	ND	20.0	20.4	102	20.0	19.9	99.5	2.42	80 - 127	20	
tert-Butylbenzene	ND	20.0	19.3	96.4	20.0	19.0	95.0	1.54	80 - 126	20	
Carbon disulfide	1.54	20.0	22.1	103	20.0	22.2	103	0.393	58 - 138	20	
Carbon tetrachloride	ND	20.0	25.2	126	20.0	24.6	123	2.50	65 - 140	20	
Chlorobenzene	ND	20.0	21.4	107	20.0	20.8	104	2.43	80 - 120	20	
Chlorodibromomethane	ND	20.0	23.5	118	20.0	23.3	116	1.18	60 - 135	20	
Chloroethane	ND	20.0	19.0	94.9	20.0	18.8	93.8	1.20	60 - 135	20	
2-Chloroethyl vinyl ether	ND	20.0	0	0	20.0	0	0	NA	58 - 151	20	*#
Chloroform	ND	20.0	23.6	118	20.0	22.6	113	4.13	80 - 125	20	
Chloromethane	ND	20.0	25.7	128	20.0	25.2	126	1.80	40 - 125	20	*
2-Chlorotoluene	ND	20.0	20.2	101	20.0	20.1	100	0.358	80 - 127	20	
4-Chlorotoluene	ND	20.0	22.0	110	20.0	20.6	103	6.54	80 - 126	20	
1,2-Dibromo-3-chloropropane	ND	20.0	20.6	103	20.0	20.3	102	1.63	50 - 130	20	
1,2-Dibromoethane	ND	20.0	21.6	108	20.0	21.6	108	0.111	80 - 125	20	
Dibromomethane	ND	20.0	24.3	121	20.0	23.2	116	4.52	75 - 125	20	
1,2-Dichlorobenzene	ND	20.0	19.8	99.1	20.0	19.3	96.5	2.67	80 - 125	20	
1,3-Dichlorobenzene	ND	20.0	20.2	101	20.0	19.7	98.5	2.78	80 - 120	20	
1,4-Dichlorobenzene	ND	20.0	19.5	97.7	20.0	19.1	95.6	2.09	80 - 120	20	
Dichlorodifluoromethane	ND	20.0	19.9	99.3	20.0	19.3	96.6	2.82	50 - 133	20	
1,1-Dichloroethane	ND	20.0	22.2	111	20.0	21.7	109	2.32	80 - 125	20	
1,2-Dichloroethane	ND	20.0	25.4	127	20.0	24.8	124	2.71	80 - 129	20	
1,1-Dichloroethene	ND	20.0	22.9	115	20.0	22.6	113	1.35	80 - 132	20	
cis-1,2-Dichloroethene	ND	20.0	21.5	108	20.0	23.4	117	8.52	70 - 125	20	
trans-1,2-Dichloroethene	ND	20.0	21.7	109	20.0	21.3	106	1.89	80 - 127	20	
1,2-Dichloropropane	ND	20.0	20.9	105	20.0	21.2	106	1.35	80 - 120	20	
1,3-Dichloropropane	ND	20.0	21.3	106	20.0	21.0	105	1.35	80 - 120	20	
2,2-Dichloropropane	ND	20.0	25.4	127	20.0	24.3	121	4.66	80 - 133	20	
cis-1,3-Dichloropropene	ND	20.0	23.0	115	20.0	22.4	112	2.54	70 - 130	20	
trans-1,3-Dichloropropene	ND	20.0	20.7	104	20.0	20.3	102	1.83	80 - 130	20	
1,1-Dichloropropene	ND	20.0	22.7	113	20.0	22.5	113	0.636	75 - 130	20	
Ethylbenzene	ND	20.0	21.0	105	20.0	20.6	103	2.13	80 - 122	20	
2-Hexanone	ND	20.0	17.8	88.9	20.0	18.7	93.6	5.14	55 - 130	20	

KEMRON FORMS - Modified 07/13/2006
Version 1.5 PDF File ID: 637627
Report generated 12/01/2006 16:01

KEMRON Environmental Services

MS/MSD REPORT

00095812

Loginnum:L0611537 Cal ID: HPMS8 03-NOV-06 Worknum:WG228326

Instrument ID:HPMS8 Contract #:DACA56-94-D-0020 Prep Method:5030B

Parent ID:L0611537-06 File ID:8M332375 Dil:1 Method:8260B

Sample ID:L0611537-08 MS File ID:8M332376 Dil:1 Matrix:Water

Sample ID:L0611537-09 MSD File ID:8M332377 Dil:1 Units:ug/L

Analyte	Parent	MS Spiked	MS Found	MS %Rec	MSD Spiked	MSD Found	MSD %Rec	%RPD	%Rec Limits	RPD Limit	Q
Hexachlorobutadiene	ND	20.0	23.3	116	20.0	24.2	121	4.14	72 - 132	20	
Isopropylbenzene	ND	20.0	20.0	100	20.0	19.6	98.2	1.94	80 - 122	20	
p-Isopropyltoluene	ND	20.0	20.3	101	20.0	19.7	98.5	2.97	80 - 122	20	
4-Methyl-2-pentanone	ND	20.0	19.1	95.4	20.0	19.6	98.0	2.76	64 - 140	20	
Methylene chloride	6.79	20.0	26.0	96.2	20.0	26.1	96.3	0.0933	80 - 123	20	
Naphthalene	ND	20.0	18.9	94.5	20.0	18.9	94.6	0.0870	59 - 149	20	
n-Propylbenzene	ND	20.0	20.7	103	20.0	20.0	100	3.12	80 - 129	20	
Styrene	ND	20.0	22.1	111	20.0	21.8	109	1.44	80 - 123	20	
1,1,1,2-Tetrachloroethane	ND	20.0	23.1	115	20.0	22.5	112	2.70	80 - 130	20	
1,1,2,2-Tetrachloroethane	ND	20.0	19.1	95.5	20.0	19.1	95.6	0.101	79 - 125	20	
Tetrachloroethene	ND	20.0	22.1	111	20.0	21.3	107	3.71	80 - 124	20	
Toluene	ND	20.0	21.0	105	20.0	20.4	102	3.16	80 - 124	20	
1,2,3-Trichlorobenzene	ND	20.0	18.6	93.2	20.0	18.0	90.2	3.25	55 - 140	20	
1,2,4-Trichlorobenzene	ND	20.0	19.2	96.0	20.0	19.0	95.0	1.08	65 - 135	20	
1,1,1-Trichloroethane	ND	20.0	25.0	125	20.0	24.0	120	4.45	80 - 134	20	
1,1,2-Trichloroethane	ND	20.0	22.0	110	20.0	21.6	108	1.77	80 - 125	20	
Trichloroethene	ND	20.0	21.8	109	20.0	21.6	108	0.931	80 - 122	20	
Trichlorofluoromethane	ND	20.0	22.4	112	20.0	21.6	108	3.56	62 - 151	20	
1,2,3-Trichloropropane	ND	20.0	20.7	104	20.0	20.2	101	2.58	75 - 125	20	
1,2,4-Trimethylbenzene	ND	20.0	21.0	105	20.0	20.3	102	3.53	80 - 125	20	
1,3,5-Trimethylbenzene	ND	20.0	21.3	106	20.0	20.5	103	3.44	80 - 127	20	
Vinyl acetate	ND	20.0	21.2	106	20.0	21.1	105	0.696	10 - 150	20	
Vinyl chloride	ND	20.0	24.0	120	20.0	23.1	115	3.98	65 - 140	20	
o-Xylene	ND	20.0	20.8	104	20.0	20.5	102	1.37	80 - 122	20	
m-,p-Xylene	ND	40.0	42.7	107	40.0	41.6	104	2.69	80 - 122	20	

* FAILS %REC LIMIT

FAILS RPD LIMIT

KEMRON FORMS - Modified 07/13/2006
Version 1.5 PDF File ID: 637627
Report generated 12/01/2006 16:01

KEMRON ENVIRONMENTAL SERVICES
ORGANIC INSTRUMENT CHECK

BFB

Login Number: L0611537
Instrument: HPMS8
Analyst: CMS
Workgroup: WG226781

Tune ID: WG226781-01
Run Date: 11/03/2006
Run Time: 15:36
File ID: 8M331741
Cal ID: HPMS8-03-NOV-06

Target	Rel. to	Lower	Upper	Rel.	Raw	Result
50.0	95.0	15.0	40.0	21.2	36988	PASS
75.0	95.0	30.0	60.0	51.3	89610	PASS
95.0	95.0	100	100	100	174848	PASS
96.0	95.0	5.00	9.00	6.51	11374	PASS
173	174	0	2.00	0.228	313	PASS
174	95.0	50.0	100	78.4	137114	PASS
175	174	5.00	9.00	7.23	9912	PASS
176	174	95.0	101	95.6	131061	PASS
177	176	5.00	9.00	7.35	9635	PASS

This check relates to the following samples, MS, MSD:

Lab ID	Client ID	Tag	Date Analyzed	Q
WG226781-07	STD	01	11/03/2006 20:10	
WG226781-10	STD	01	11/03/2006 21:42	
WG226781-09	STD	01	11/03/2006 21:12	
WG226781-08	STD-CCV	01	11/03/2006 20:41	
WG226781-02	STD	01	11/03/2006 17:37	
WG226781-06	STD	01	11/03/2006 19:39	
WG226781-05	STD	01	11/03/2006 19:09	
WG226781-04	STD	01	11/03/2006 18:38	
WG226781-03	STD	01	11/03/2006 18:08	

* Sample past 12 hour tune limit

KEMRON FORMS - Modified 07/26/2006
Version 1.3 PDF File ID: 637633
Report generated 12/01/2006 16:01

KEMRON ENVIRONMENTAL SERVICES
ORGANIC INSTRUMENT CHECK

BFB

Login Number: L0611537 Tune ID: WG226812-01
Instrument: HPMS8 Run Date: 11/04/2006
Analyst: MES Run Time: 11:44
Workgroup: WG226812 File ID: 8M331758
Cal ID: HPMS8-03-NOV-06

Target	Rel. to	Lower	Upper	Rel.	Raw	Result
50.0	95.0	15.0	40.0	19.5	32722	PASS
75.0	95.0	30.0	60.0	49.2	82509	PASS
95.0	95.0	100	100	100	167680	PASS
96.0	95.0	5.00	9.00	6.94	11645	PASS
173	174	0	2.00	0.573	732	PASS
174	95.0	50.0	100	76.2	127853	PASS
175	174	5.00	9.00	7.36	9404	PASS
176	174	95.0	101	97.3	124341	PASS
177	176	5.00	9.00	6.61	8222	PASS

This check relates to the following samples, MS, MSD:

Lab ID	Client ID	Tag	Date Analyzed	Q
WG226781-11	SSCV	01	11/04/2006 13:11	

* Sample past 12 hour tune limit

KEMRON FORMS - Modified 07/26/2006
Version 1.3 PDF File ID: 637633
Report generated 12/01/2006 16:01

KEMRON ENVIRONMENTAL SERVICES
ORGANIC INSTRUMENT CHECK

BFB

Login Number: L0611537
Instrument: HPMS6
Analyst: CMS
Workgroup: WG227929

Tune ID: WG227929-01
Run Date: 11/20/2006
Run Time: 09:10
File ID: 6M62037
Cal ID: HPMS6-20-NOV-06

Target	Rel. to	Lower	Upper	Rel.	Raw	Result
50.0	95.0	15.0	40.0	16.9	15096	PASS
75.0	95.0	30.0	60.0	46.8	41874	PASS
95.0	95.0	100	100	100	89392	PASS
96.0	95.0	5.00	9.00	6.56	5867	PASS
173	174	0	2.00	0.431	308	PASS
174	95.0	50.0	100	80.0	71482	PASS
175	174	5.00	9.00	7.31	5227	PASS
176	174	95.0	101	97.6	69736	PASS
177	176	5.00	9.00	7.20	5018	PASS

This check relates to the following samples, MS, MSD:

Lab ID	Client ID	Tag	Date Analyzed	Q
WG227929-12	SSCV	01	11/20/2006 17:01	
WG227929-11	STD	01	11/20/2006 14:29	
WG227929-10	STD	01	11/20/2006 13:57	
WG227929-09	STD	01	11/20/2006 13:24	
WG227929-08	STD-CCV	01	11/20/2006 12:52	
WG227929-02	STD	01	11/20/2006 09:38	
WG227929-06	STD	01	11/20/2006 11:47	
WG227929-05	STD	01	11/20/2006 11:15	
WG227929-04	STD	01	11/20/2006 10:43	
WG227929-03	STD	01	11/20/2006 10:10	
WG227929-07	STD	01	11/20/2006 12:19	

* Sample past 12 hour tune limit

KEMRON FORMS - Modified 07/26/2006
Version 1.3 PDF File ID: 637633
Report generated 12/01/2006 16:01

KEMRON ENVIRONMENTAL SERVICES
ORGANIC INSTRUMENT CHECK

BFB

Login Number: L0611537
Instrument: HPMS8
Analyst: CMS
Workgroup: WG228325

Tune ID: WG228325-01
Run Date: 11/28/2006
Run Time: 06:29
File ID: 8M332367
Cal ID: HPMS8 -03-NOV-06

Target	Rel. to	Lower	Upper	Rel.	Raw	Result
50.0	95.0	15.0	40.0	21.6	24840	PASS
75.0	95.0	30.0	60.0	52.6	60432	PASS
95.0	95.0	100	100	100	114957	PASS
96.0	95.0	5.00	9.00	6.91	7949	PASS
173	174	0	2.00	0.322	272	PASS
174	95.0	50.0	100	73.6	84562	PASS
175	174	5.00	9.00	7.44	6290	PASS
176	174	95.0	101	99.5	84181	PASS
177	176	5.00	9.00	6.25	5264	PASS

This check relates to the following CCV:

Lab ID	Client ID	Date Analyzed	
WG228325-02	CCV	11/28/2006 06:56	

This check relates to the following samples & batch QC:

Lab ID	Client ID	Tag	Date Analyzed	Q
WG228326-01	BLANK	01	11/28/2006 07:59	
WG228326-02	LCS	01	11/28/2006 08:30	
L0611537-10	TRIP BLANK	01	11/28/2006 10:02	
L0611537-06	LAP-29WW40-2ND	01	11/28/2006 10:31	
L0611537-08	LAP-29WW40-2ND MS	01	11/28/2006 11:02	
L0611537-09	LAP-29WW40-2ND MSD	01	11/28/2006 11:32	
L0611537-07	LAP-29WW40-2ND DUP	01	11/28/2006 12:03	
L0611537-01	LAP-29WW35-2ND	01	11/28/2006 12:33	
L0611537-03	LAP-29WW37-2ND	01	11/28/2006 13:33	

* Sample past 12 hour tune limit

KEMRON FORMS - Modified 07/27/2006
Version 1.3 PDF File ID: 637634
Report generated 12/01/2006 16:01

KEMRON ENVIRONMENTAL SERVICES
ORGANIC INSTRUMENT CHECK

BFB

Login Number: L0611537
Instrument: HPMS8
Analyst: CMS
Workgroup: WG228429

Tune ID: WG228429-01
Run Date: 11/29/2006
Run Time: 07:46
File ID: 8M332393
Cal ID: HPMS8 -03-NOV-06

Target	Rel. to	Lower	Upper	Rel.	Raw	Result
50.0	95.0	15.0	40.0	21.6	23390	PASS
75.0	95.0	30.0	60.0	52.6	57074	PASS
95.0	95.0	100	100	100	108498	PASS
96.0	95.0	5.00	9.00	7.04	7641	PASS
173	174	0	2.00	0.283	243	PASS
174	95.0	50.0	100	79.1	85874	PASS
175	174	5.00	9.00	7.54	6471	PASS
176	174	95.0	101	96.5	82837	PASS
177	176	5.00	9.00	6.67	5529	PASS

This check relates to the following CCV:

Lab ID	Client ID	Date Analyzed	
WG228429-02	CCV	11/29/2006 08:15	

This check relates to the following samples & batch QC:

Lab ID	Client ID	Tag	Date Analyzed	Q
WG228430-01	BLANK	01	11/29/2006 09:52	
WG228430-06	LCS	01	11/29/2006 10:22	
WG228430-02	LCS	01	11/29/2006 10:52	
L0611537-01	LAP-29WW35-2ND	DL01	11/29/2006 11:23	
L0611537-02	LAP-29WW36-2ND	02	11/29/2006 12:54	
WG228430-10	FBLK	01	11/29/2006 15:25	

* Sample past 12 hour tune limit

KEMRON FORMS - Modified 07/27/2006
Version 1.3 PDF File ID: 637634
Report generated 12/01/2006 16:01

KEMRON ENVIRONMENTAL SERVICES
ORGANIC INSTRUMENT CHECK

BFB

Login Number: L0611537
Instrument: HPMS6
Analyst: CMS
Workgroup: WG228431

Tune ID: WG228431-01
Run Date: 11/29/2006
Run Time: 08:01
File ID: 6M62270
Cal ID: HPMS6 -20-NOV-06

Target	Rel. to	Lower	Upper	Rel.	Raw	Result
50.0	95.0	15.0	40.0	18.0	7216	PASS
75.0	95.0	30.0	60.0	44.5	17902	PASS
95.0	95.0	100	100	100	40189	PASS
96.0	95.0	5.00	9.00	6.99	2809	PASS
173	174	0	2.00	0	0	PASS
174	95.0	50.0	100	84.2	33829	PASS
175	174	5.00	9.00	7.17	2424	PASS
176	174	95.0	101	101	34024	PASS
177	176	5.00	9.00	7.29	2480	PASS

This check relates to the following CCV:

Lab ID	Client ID	Date Analyzed	
WG228431-02	CCV	11/29/2006 08:33	

This check relates to the following samples & batch QC:

Lab ID	Client ID	Tag	Date Analyzed	Q
WG228433-01	BLANK	01	11/29/2006 09:05	
WG228433-02	LCS	01	11/29/2006 09:38	
WG228433-03	LCS2	01	11/29/2006 10:10	
L0611537-04	LAP-29WW38-2ND	02	11/29/2006 12:20	
L0611537-05	LAP-29WW39-2ND	02	11/29/2006 12:53	

* Sample past 12 hour tune limit

KEMRON FORMS - Modified 07/27/2006
Version 1.3 PDF File ID: 637634
Report generated 12/01/2006 16:01

KEMRON Environmental Services

INITIAL CALIBRATION SUMMARY

00095819

Login Number: L0611537 **Instrument ID:** HPMS6

Analytical Method: 8260B **Initial Calibration Date:** 20-NOV-06 14:29

ICAL Workgroup: WG227929 **Column ID:** F

Analyte		AVG RF	% RSD	LINEAR	QUAD
1,1-Dichloroethene	CCC	0.3687	8.53		
1,2-Dichloropropane	CCC	0.2202	3.32		
Chloroform	CCC	0.4926	5.02		
Ethylbenzene	CCC	0.5103	4.71		
Toluene	CCC	1.363	6.40		
Vinyl Chloride	CCC	0.1997	20.0		0.998
1,1,2,2-Tetrachloroethane	SPCC	0.3881	3.61		
1,1-Dichloroethane	SPCC	0.4314	3.44		
Bromoform	SPCC	0.1947	13.0		
Chlorobenzene	SPCC	0.9475	3.45		
Chloromethane	SPCC	0.2482	13.7		
1,1,1,2-Tetrachloroethane		0.3647	4.43		
1,1,1-Trichloroethane		0.4614	6.12		
1,1,2-Trichloroethane		0.2161	3.41		
1,1-Dichloropropene		0.3611	3.75		
1,2,3-Trichlorobenzene		0.8343	5.45		
1,2,3-Trichloropropane		0.3152	3.47		
1,2,4-Trichlorobenzene		0.9889	4.22		
1,2,4-Trimethylbenzene		2.528	7.72		
1,2-Dibromo-3-Chloropropane		0.07790	10.6		
1,2-Dibromoethane		0.2319	4.78		
1,2-Dichlorobenzene		1.309	4.19		
1,2-Dichloroethane		0.3374	5.60		
1,3,5-Trimethylbenzene		2.370	5.12		
1,3-Dichlorobenzene		1.451	3.00		
1,3-Dichloropropane		0.3894	3.04		
1,4-Dichlorobenzene		1.503	6.66		
2,2-Dichloropropane		0.4213	12.1		
2-Butanone		0.04788	1.66		
2-Chloroethyl Vinyl Ether		0.07810	26.7		0.999
2-Chlorotoluene		2.072	7.75		
2-Hexanone		0.09810	4.47		
4-Chlorotoluene		2.079	5.88		
4-Methyl-2-Pentanone		0.04460	5.92		
Acetone		0.03507	9.44		
Benzene		0.9358	4.87		
Bromobenzene		0.7370	6.15		
Bromochloromethane		0.1568	3.31		
Bromodichloromethane		0.3451	3.26		
Bromomethane		0.1516	21.0		1.00
Carbon Disulfide		0.6606	8.93		
Carbon Tetrachloride		0.4045	7.51		
Chloroethane		0.1672	7.84		
Dibromochloromethane		0.3004	7.74		
Dibromomethane		0.1262	5.16		

KEMRON FORMS - Modified 10/13/2006
Version 1.5 PDF File ID: 637631
Report generated 12/01/2006 16:01

KEMRON Environmental Services

INITIAL CALIBRATION SUMMARY

00095820

Login Number: L0611537 **Instrument ID:** HPMS6

Analytical Method: 8260B **Initial Calibration Date:** 20-NOV-06 14:29

ICAL Workgroup: WG227929 **Column ID:** F

Analyte		AVG RF	% RSD	LINEAR	QUAD
Dichlorodifluoromethane		0.3626	7.52		
Hexachlorobutadiene		0.4618	5.22		
Isopropylbenzene		1.605	4.73		
Methylene Chloride		0.2574	12.5		
Naphthalene		1.551	4.97		
Styrene		1.026	4.63		
Tetrachloroethene		0.3946	5.46		
Trichloroethene		0.2779	4.40		
Trichlorofluoromethane		0.5346	2.07		
Vinyl Acetate		0.2869	9.89		
cis-1,2-Dichloroethene		0.2682	2.97		
cis-1,3-Dichloropropene		0.3818	6.85		
m-,p-Xylene		0.6332	4.93		
n-Butylbenzene		2.322	5.76		
n-Propylbenzene		3.194	6.11		
o-Xylene		0.6121	3.39		
p-Isopropyltoluene		2.557	5.21		
sec-Butylbenzene		2.881	4.84		
tert-Butylbenzene		0.5160	7.95		
trans-1,2-Dichloroethene		0.2522	6.99		
trans-1,3-Dichloropropene		0.4394	8.37		

KEMRON Environmental Services

INITIAL CALIBRATION SUMMARY

00095821

Login Number: L0611537 **Instrument ID:** HPMS8

Analytical Method: 8260B **Initial Calibration Date:** 03-NOV-06 21:42

ICAL Workgroup: WG226781 **Column ID:** F

Analyte		AVG RF	% RSD	LINEAR	QUAD
1,1-Dichloroethene	CCC	0.5179	4.40		
1,2-Dichloropropane	CCC	0.2886	3.01		
Chloroform	CCC	0.6487	5.30		
Ethylbenzene	CCC	0.6445	9.88		
Toluene	CCC	1.695	9.72		
Vinyl Chloride	CCC	0.3146	12.7		
1,1,2,2-Tetrachloroethane	SPCC	0.5401	8.82		
1,1-Dichloroethane	SPCC	0.5871	3.37		
Bromoform	SPCC	0.2311	8.24		
Chlorobenzene	SPCC	1.148	10.4		
Chloromethane	SPCC	0.3430	6.61		
1,1,1,2-Tetrachloroethane		0.4201	8.26		
1,1,1-Trichloroethane		0.6077	5.58		
1,1,2-Trichloroethane		0.2713	3.77		
1,1-Dichloropropene		0.4643	4.47		
1,2,3-Trichlorobenzene		1.013	12.9		
1,2,3-Trichloropropane		0.1855	9.07		
1,2,4-Trichlorobenzene		1.166	11.6		
1,2,4-Trimethylbenzene		3.157	12.5		
1,2-Dibromo-3-Chloropropane		0.1147	5.74		
1,2-Dibromoethane		0.2761	5.72		
1,2-Dichlorobenzene		1.596	9.73		
1,2-Dichloroethane		0.4585	5.25		
1,3,5-Trimethylbenzene		2.988	10.9		
1,3-Dichlorobenzene		1.726	9.67		
1,3-Dichloropropane		0.5004	3.00		
1,4-Dichlorobenzene		1.842	12.9		
2,2-Dichloropropane		0.5370	6.15		
2-Butanone		0.06460	10.5		
2-Chloroethyl Vinyl Ether		0.09763	35.9		0.999
2-Chlorotoluene		2.765	12.2		
2-Hexanone		0.1429	8.54		
4-Chlorotoluene		2.718	14.8		
4-Methyl-2-Pentanone		0.05942	11.9		
Acetone		0.05038	6.42		
Benzene		1.238	7.93		
Bromobenzene		0.8665	6.91		
Bromochloromethane		0.1841	4.58		
Bromodichloromethane		0.4521	4.40		
Bromomethane		0.1880	14.8		
Carbon Disulfide		0.8963	6.41		
Carbon Tetrachloride		0.5096	5.54		
Chloroethane		0.2288	2.85		
Dibromochloromethane		0.3506	6.83		
Dibromomethane		0.1518	8.86		

KEMRON FORMS - Modified 10/13/2006
Version 1.5 PDF File ID: 637631
Report generated 12/01/2006 16:01

KEMRON Environmental Services

INITIAL CALIBRATION SUMMARY

00095822

Login Number: L0611537 **Instrument ID:** HPMS8

Analytical Method: 8260B **Initial Calibration Date:** 03-NOV-06 21:42

ICAL Workgroup: WG226781 **Column ID:** F

Analyte		AVG RF	% RSD	LINEAR	QUAD
Dichlorodifluoromethane		0.5067	6.45		
Hexachlorobutadiene		0.4430	5.49		
Isopropylbenzene		1.945	10.5		
Methylene Chloride		0.3396	10.8		
Naphthalene		2.007	10.9		
Styrene		1.238	8.05		
Tetrachloroethene		0.3633	6.58		
Trichloroethene		0.3276	4.24		
Trichlorofluoromethane		0.6637	3.13		
Vinyl Acetate		0.3710	5.64		
cis-1,2-Dichloroethene		0.5066	6.05		
cis-1,3-Dichloropropene		0.4942	4.50		
m-,p-Xylene		0.7866	11.6		
n-Butylbenzene		2.676	10.2		
n-Propylbenzene		4.011	13.2		
o-Xylene		0.7730	5.38		
p-Isopropyltoluene		2.913	11.0		
sec-Butylbenzene		3.347	10.9		
tert-Butylbenzene		0.5847	5.97		
trans-1,2-Dichloroethene		0.4775	3.83		
trans-1,3-Dichloropropene		0.5873	3.71		

INITIAL CALIBRATION DATA

00095823

Login Number: L0611537 **Instrument ID:** HPMS6

Analytical Method: 8260B **Initial Calibration Date:** 20-NOV-06 14:29

Column ID: F

Analyte	WG227929-02			WG227929-03			WG227929-04		
	CONC	RESP	RF	CONC	RESP	RF	CONC	RESP	RF
1,1-Dichloroethene	NA	NA	NA	0.400	4048.00000	0.3018	1.00	13077.0000	0.3985
1,2-Dichloropropane	NA	NA	NA	0.400	2863.00000	0.2135	1.00	7343.00000	0.2238
Chloroform	0.300	5521.00000	0.5255	0.400	7135.00000	0.5320	1.00	16443.0000	0.5011
Ethylbenzene	NA	NA	NA	0.400	4941.00000	0.4913	1.00	13633.0000	0.5451
Toluene	NA	NA	NA	0.400	14789.0000	1.471	1.00	36300.0000	1.451
Vinyl Chloride	NA	NA	NA	0.400	3541.00000	0.2640	1.00	8103.00000	0.2469
1,1,2,2-Tetrachloroethane	NA	NA	NA	0.400	2260.00000	0.3767	1.00	5327.00000	0.3718
1,1-Dichloroethane	NA	NA	NA	0.400	5514.00000	0.4112	1.00	14026.0000	0.4274
Bromoform	NA	NA	NA	NA	NA	NA	1.00	4007.00000	0.1602
Chlorobenzene	NA	NA	NA	0.400	9890.00000	0.9834	1.00	24062.0000	0.9620
Chloromethane	NA	NA	NA	0.400	4257.00000	0.3174	1.00	9546.00000	0.2909
1,1,1,2-Tetrachloroethane	NA	NA	NA	0.400	3710.00000	0.3689	1.00	8461.00000	0.3383
1,1,1-Trichloroethane	NA	NA	NA	0.400	5880.00000	0.4384	1.00	15242.0000	0.4645
1,1,2-Trichloroethane	NA	NA	NA	0.400	1996.00000	0.1985	1.00	5404.00000	0.2161
1,1-Dichloropropene	NA	NA	NA	0.400	4797.00000	0.3577	1.00	11577.0000	0.3528
1,2,3-Trichlorobenzene	0.300	3879.00000	0.8573	0.400	4812.00000	0.8021	1.00	12995.0000	0.9071
1,2,3-Trichloropropane	NA	NA	NA	NA	NA	NA	1.00	4641.00000	0.3239
1,2,4-Trichlorobenzene	NA	NA	NA	0.400	5918.00000	0.9864	1.00	14894.0000	1.040
1,2,4-Trimethylbenzene	NA	NA	NA	0.400	16699.0000	2.783	1.00	39286.0000	2.742
1,2-Dibromo-3-Chloropropane	NA	NA	NA	NA	NA	NA	1.00	1031.00000	0.07200
1,2-Dibromoethane	NA	NA	NA	0.400	2151.00000	0.2139	1.00	5333.00000	0.2132
1,2-Dichlorobenzene	0.300	6492.00000	1.435	0.400	7967.00000	1.328	1.00	18940.0000	1.322
1,2-Dichloroethane	NA	NA	NA	0.400	4832.00000	0.3603	1.00	11569.0000	0.3526
1,3,5-Trimethylbenzene	NA	NA	NA	0.400	14307.0000	2.385	1.00	36453.0000	2.545
1,3-Dichlorobenzene	NA	NA	NA	0.400	9162.00000	1.527	1.00	20630.0000	1.440
1,3-Dichloropropane	NA	NA	NA	0.400	3958.00000	0.3936	1.00	9175.00000	0.3668
1,4-Dichlorobenzene	0.300	7978.00000	1.763	0.400	8977.00000	1.496	1.00	21687.0000	1.514
2,2-Dichloropropane	NA	NA	NA	0.400	4050.00000	0.3020	1.00	13418.0000	0.4089
2-Butanone	NA	NA	NA	NA	NA	NA	NA	NA	NA
2-Chloroethyl Vinyl Ether	NA	NA	NA	NA	NA	NA	NA	NA	NA
2-Chlorotoluene	NA	NA	NA	0.400	14506.0000	2.418	1.00	30153.0000	2.105
2-Hexanone	NA	NA	NA	NA	NA	NA	NA	NA	NA
4-Chlorotoluene	NA	NA	NA	0.400	13055.0000	2.176	1.00	30594.0000	2.136
4-Methyl-2-Pentanone	NA	NA	NA	NA	NA	NA	NA	NA	NA
Acetone	NA	NA	NA	NA	NA	NA	NA	NA	NA
Benzene	NA	NA	NA	0.400	13490.0000	1.006	1.00	32179.0000	0.9806
Bromobenzene	0.300	3827.00000	0.8458	0.400	4359.00000	0.7266	1.00	10953.0000	0.7645
Bromochloromethane	NA	NA	NA	0.400	2061.00000	0.1537	1.00	4828.00000	0.1471
Bromodichloromethane	NA	NA	NA	0.400	4315.00000	0.3217	1.00	11158.0000	0.3400
Bromomethane	NA	NA	NA	NA	NA	NA	1.00	3451.00000	0.1052
Carbon Disulfide	NA	NA	NA	0.400	9036.00000	0.6738	1.00	17039.0000	0.5192
Carbon Tetrachloride	NA	NA	NA	0.400	4860.00000	0.3624	1.00	13090.0000	0.3989

KEMRON FORMS - Modified 10/13/2006
Version 1.6 PDF File ID: 637631
Report generated 12/01/2006 16:01

INITIAL CALIBRATION DATA

00095824

Login Number: L0611537 **Instrument ID:** HPMS6

Analytical Method: 8260B **Initial Calibration Date:** 20-NOV-06 14:29

Column ID: F

Analyte	WG227929-05			WG227929-06			WG227929-07		
	CONC	RESP	RF	CONC	RESP	RF	CONC	RESP	RF
1,1-Dichloroethene	2.00	25476.0000	0.3943	5.00	53852.0000	0.3348	20.0	253000.000	0.3883
1,2-Dichloropropane	2.00	14849.0000	0.2298	5.00	32907.0000	0.2046	20.0	143370.000	0.2200
Chloroform	2.00	32490.0000	0.5028	5.00	74860.0000	0.4654	20.0	324804.000	0.4984
Ethylbenzene	2.00	25640.0000	0.5199	5.00	58335.0000	0.4802	20.0	264222.000	0.5378
Toluene	2.00	71235.0000	1.444	5.00	156485.000	1.288	20.0	695076.000	1.415
Vinyl Chloride	2.00	13901.0000	0.2151	5.00	30454.0000	0.1893	20.0	122970.000	0.1887
1,1,2,2-Tetrachloroethane	2.00	10738.0000	0.3722	5.00	28994.0000	0.4058	20.0	117752.000	0.4003
1,1-Dichloroethane	2.00	28615.0000	0.4429	5.00	66697.0000	0.4146	20.0	295110.000	0.4529
Bromoform	2.00	7796.00000	0.1581	5.00	22064.0000	0.1816	20.0	96523.0000	0.1964
Chlorobenzene	2.00	46400.0000	0.9408	5.00	111244.000	0.9157	20.0	489386.000	0.9960
Chloromethane	2.00	16667.0000	0.2580	5.00	36573.0000	0.2274	20.0	146511.000	0.2248
1,1,1,2-Tetrachloroethane	2.00	17888.0000	0.3627	5.00	42701.0000	0.3515	20.0	191375.000	0.3895
1,1,1-Trichloroethane	2.00	31108.0000	0.4815	5.00	65967.0000	0.4101	20.0	320550.000	0.4919
1,1,2-Trichloroethane	2.00	10818.0000	0.2193	5.00	25951.0000	0.2136	20.0	109844.000	0.2236
1,1-Dichloropropene	2.00	23900.0000	0.3699	5.00	54678.0000	0.3399	20.0	246548.000	0.3784
1,2,3-Trichlorobenzene	2.00	24818.0000	0.8603	5.00	61103.0000	0.8551	20.0	255289.000	0.8678
1,2,3-Trichloropropane	2.00	8953.00000	0.3103	5.00	23417.0000	0.3277	20.0	93889.0000	0.3192
1,2,4-Trichlorobenzene	2.00	28072.0000	0.9731	5.00	71664.0000	1.003	20.0	305077.000	1.037
1,2,4-Trimethylbenzene	2.00	76960.0000	2.668	5.00	173904.000	2.434	20.0	776387.000	2.639
1,2-Dibromo-3-Chloropropane	2.00	1829.00000	0.06340	5.00	5243.00000	0.07340	20.0	24866.0000	0.08450
1,2-Dibromoethane	2.00	11671.0000	0.2366	5.00	28567.0000	0.2351	20.0	118753.000	0.2417
1,2-Dichlorobenzene	2.00	37089.0000	1.286	5.00	91157.0000	1.276	20.0	393067.000	1.336
1,2-Dichloroethane	2.00	22840.0000	0.3535	5.00	53373.0000	0.3318	20.0	227527.000	0.3492
1,3,5-Trimethylbenzene	2.00	69298.0000	2.402	5.00	164049.000	2.296	20.0	738344.000	2.510
1,3-Dichlorobenzene	2.00	42435.0000	1.471	5.00	100683.000	1.409	20.0	438627.000	1.491
1,3-Dichloropropane	2.00	18960.0000	0.3844	5.00	48729.0000	0.4011	20.0	197484.000	0.4019
1,4-Dichlorobenzene	2.00	43194.0000	1.497	5.00	103244.000	1.445	20.0	449949.000	1.530
2,2-Dichloropropane	2.00	27547.0000	0.4263	5.00	64055.0000	0.3982	20.0	304530.000	0.4673
2-Butanone	NA	NA	NA	5.00	7587.00000	0.04720	20.0	31572.0000	0.04850
2-Chloroethyl Vinyl Ether	NA	NA	NA	5.00	6608.00000	0.04110	20.0	43575.0000	0.06690
2-Chlorotoluene	2.00	61582.0000	2.135	5.00	143170.000	2.004	20.0	627256.000	2.132
2-Hexanone	NA	NA	NA	5.00	12279.0000	0.1011	20.0	48110.0000	0.09790
4-Chlorotoluene	2.00	63013.0000	2.184	5.00	148170.000	2.074	20.0	654281.000	2.224
4-Methyl-2-Pentanone	NA	NA	NA	5.00	6623.00000	0.04120	20.0	27641.0000	0.04240
Acetone	NA	NA	NA	5.00	6521.00000	0.04050	20.0	24315.0000	0.03730
Benzene	2.00	61674.0000	0.9545	5.00	137930.000	0.8574	20.0	622484.000	0.9553
Bromobenzene	2.00	21929.0000	0.7601	5.00	49432.0000	0.6918	20.0	218153.000	0.7416
Bromochloromethane	2.00	10221.0000	0.1582	5.00	24237.0000	0.1507	20.0	106118.000	0.1628
Bromodichloromethane	2.00	22473.0000	0.3478	5.00	54271.0000	0.3374	20.0	230527.000	0.3538
Bromomethane	2.00	7453.00000	0.1153	5.00	19976.0000	0.1242	20.0	102013.000	0.1565
Carbon Disulfide	2.00	47430.0000	0.7341	5.00	104417.000	0.6491	20.0	449054.000	0.6891
Carbon Tetrachloride	2.00	26826.0000	0.4152	5.00	57961.0000	0.3603	20.0	285144.000	0.4376

KEMRON FORMS - Modified 10/13/2006
Version 1.6 PDF File ID: 637631
Report generated 12/01/2006 16:01

INITIAL CALIBRATION DATA

00095825

Login Number: L0611537 **Instrument ID:** HPMS6

Analytical Method: 8260B **Initial Calibration Date:** 20-NOV-06 14:29

Column ID: F

Analyte	WG227929-08			WG227929-09			WG227929-10		
	CONC	RESP	RF	CONC	RESP	RF	CONC	RESP	RF
1,1-Dichloroethene	50.0	623539.000	0.3869	100	1221242.00	0.3705	150	1901484.00	0.3733
1,2-Dichloropropane	50.0	363317.000	0.2254	100	728952.000	0.2211	150	1128877.00	0.2216
Chloroform	50.0	800520.000	0.4967	100	1562483.00	0.4740	150	2381690.00	0.4676
Ethylbenzene	50.0	664445.000	0.5306	100	1312282.00	0.5075	150	2015825.00	0.4961
Toluene	50.0	1721109.00	1.375	100	3416101.00	1.321	150	5174612.00	1.274
Vinyl Chloride	50.0	298592.000	0.1853	100	512891.000	0.1556	150	777200.000	0.1526
1,1,2,2-Tetrachloroethane	50.0	302639.000	0.3914	100	648615.000	0.4040	150	1004823.00	0.3950
1,1-Dichloroethane	50.0	727872.000	0.4516	100	1408052.00	0.4271	150	2171005.00	0.4262
Bromoform	50.0	263066.000	0.2101	100	566718.000	0.2192	150	899471.000	0.2214
Chlorobenzene	50.0	1215495.00	0.9707	100	2429466.00	0.9396	150	3737322.00	0.9198
Chloromethane	50.0	364985.000	0.2265	100	728857.000	0.2211	150	1192199.00	0.2341
1,1,1,2-Tetrachloroethane	50.0	477248.000	0.3811	100	968326.000	0.3745	150	1484905.00	0.3655
1,1,1-Trichloroethane	50.0	807193.000	0.5008	100	1533494.00	0.4652	150	2318993.00	0.4553
1,1,2-Trichloroethane	50.0	276512.000	0.2208	100	569480.000	0.2202	150	889886.000	0.2190
1,1-Dichloropropene	50.0	615826.000	0.3821	100	1191072.00	0.3613	150	1813603.00	0.3561
1,2,3-Trichlorobenzene	50.0	642656.000	0.8311	100	1320293.00	0.8224	150	2015036.00	0.7922
1,2,3-Trichloropropane	50.0	246167.000	0.3183	100	509933.000	0.3176	150	796068.000	0.3130
1,2,4-Trichlorobenzene	50.0	783852.000	1.014	100	1589038.00	0.9898	150	2411378.00	0.9480
1,2,4-Trimethylbenzene	50.0	1968194.00	2.545	100	3862173.00	2.406	150	5841164.00	2.296
1,2-Dibromo-3-Chloropropane	50.0	67062.0000	0.08670	100	138865.000	0.08650	150	206174.000	0.08110
1,2-Dibromoethane	50.0	300858.000	0.2403	100	619767.000	0.2397	150	967269.000	0.2381
1,2-Dichlorobenzene	50.0	1016740.00	1.315	100	2076131.00	1.293	150	3212209.00	1.263
1,2-Dichloroethane	50.0	547981.000	0.3400	100	1081577.00	0.3281	150	1623053.00	0.3186
1,3,5-Trimethylbenzene	50.0	1897221.00	2.454	100	3711550.00	2.312	150	5684215.00	2.235
1,3-Dichlorobenzene	50.0	1142092.00	1.477	100	2305841.00	1.436	150	3580327.00	1.408
1,3-Dichloropropane	50.0	497495.000	0.3973	100	1016027.00	0.3929	150	1588169.00	0.3909
1,4-Dichlorobenzene	50.0	1160747.00	1.501	100	2343203.00	1.460	150	3624768.00	1.425
2,2-Dichloropropane	50.0	759871.000	0.4715	100	1473070.00	0.4469	150	2230317.00	0.4379
2-Butanone	50.0	77266.0000	0.04790	100	159307.000	0.04830	150	247953.000	0.04870
2-Chloroethyl Vinyl Ether	50.0	132293.000	0.08210	100	297824.000	0.09030	150	483424.000	0.09490
2-Chlorotoluene	50.0	1623939.00	2.100	100	3127021.00	1.948	150	4890281.00	1.923
2-Hexanone	50.0	122933.000	0.09820	100	261377.000	0.1011	150	409274.000	0.1007
4-Chlorotoluene	50.0	1619037.00	2.094	100	3283842.00	2.046	150	4832110.00	1.900
4-Methyl-2-Pentanone	50.0	72557.0000	0.04500	100	155919.000	0.04730	150	243638.000	0.04780
Acetone	50.0	55151.0000	0.03420	100	111125.000	0.03370	150	170185.000	0.03340
Benzene	50.0	1528419.00	0.9483	100	3009771.00	0.9130	150	4631412.00	0.9093
Bromobenzene	50.0	558539.000	0.7223	100	1136223.00	0.7078	150	1788852.00	0.7032
Bromochloromethane	50.0	259585.000	0.1611	100	522730.000	0.1586	150	817084.000	0.1604
Bromodichloromethane	50.0	580605.000	0.3602	100	1161791.00	0.3524	150	1775690.00	0.3486
Bromomethane	50.0	274956.000	0.1706	100	595971.000	0.1808	150	908161.000	0.1783
Carbon Disulfide	50.0	1122974.00	0.6968	100	2194081.00	0.6656	150	3369176.00	0.6615
Carbon Tetrachloride	50.0	725280.000	0.4500	100	1380995.00	0.4189	150	2060909.00	0.4046

KEMRON FORMS - Modified 10/13/2006
Version 1.6 PDF File ID: 637631
Report generated 12/01/2006 16:01

INITIAL CALIBRATION DATA

00095826

Login Number: L0611537 **Instrument ID:** HPMS6

Analytical Method: 8260B **Initial Calibration Date:** 20-NOV-06 14:29

Column ID: F

Analyte	WG227929-11		
	CONC	RESP	RF
1,1-Dichloroethene	200	2582803.00	0.3700
1,2-Dichloropropane	200	1550407.00	0.2221
Chloroform	200	3225209.00	0.4621
Ethylbenzene	200	2742575.00	0.4842
Toluene	200	6985140.00	1.233
Vinyl Chloride	NA	NA	NA
1,1,2,2-Tetrachloroethane	200	1298044.00	0.3759
1,1-Dichloroethane	200	2993928.00	0.4289
Bromoform	200	1194753.00	0.2109
Chlorobenzene	200	5096339.00	0.8998
Chloromethane	200	1629838.00	0.2335
1,1,1,2-Tetrachloroethane	200	1983885.00	0.3503
1,1,1-Trichloroethane	200	3104302.00	0.4447
1,1,2-Trichloroethane	200	1212565.00	0.2141
1,1-Dichloropropene	200	2452103.00	0.3513
1,2,3-Trichlorobenzene	200	2580918.00	0.7474
1,2,3-Trichloropropane	200	1007798.00	0.2918
1,2,4-Trichlorobenzene	200	3140640.00	0.9095
1,2,4-Trimethylbenzene	200	7731144.00	2.239
1,2-Dibromo-3-Chloropropane	200	261040.000	0.07560
1,2-Dibromoethane	200	1293982.00	0.2285
1,2-Dichlorobenzene	200	4255874.00	1.232
1,2-Dichloroethane	200	2110473.00	0.3024
1,3,5-Trimethylbenzene	200	7562932.00	2.190
1,3-Dichlorobenzene	200	4831417.00	1.399
1,3-Dichloropropane	200	2126326.00	0.3754
1,4-Dichlorobenzene	200	4841480.00	1.402
2,2-Dichloropropane	200	3020496.00	0.4327
2-Butanone	200	325758.000	0.04670
2-Chloroethyl Vinyl Ether	200	651523.000	0.09330
2-Chlorotoluene	200	6509160.00	1.885
2-Hexanone	200	507714.000	0.08960
4-Chlorotoluene	200	6477553.00	1.876
4-Methyl-2-Pentanone	200	306528.000	0.04390
Acetone	200	218196.000	0.03130
Benzene	200	6266343.00	0.8978
Bromobenzene	200	2438571.00	0.7062
Bromochloromethane	200	1104384.00	0.1582
Bromodichloromethane	200	2399738.00	0.3438
Bromomethane	200	1267130.00	0.1815
Carbon Disulfide	200	4580747.00	0.6563
Carbon Tetrachloride	200	2741105.00	0.3927

KEMRON Environmental Services

INITIAL CALIBRATION DATA

00095827

Login Number: L0611537
Instrument ID: HPMS6
Analytical Method: 8260B
Initial Calibration Date: 20-NOV-06 14:29
Column ID: F

Analyte	WG227929-02			WG227929-03			WG227929-04		
	CONC	RESP	RF	CONC	RESP	RF	CONC	RESP	RF
Chloroethane	NA	NA	NA	0.400	1824.00000	0.1360	1.00	5829.00000	0.1776
Dibromochloromethane	NA	NA	NA	0.400	2675.00000	0.2660	1.00	6599.00000	0.2638
Dibromomethane	NA	NA	NA	0.400	1483.00000	0.1106	1.00	4299.00000	0.1310
Dichlorodifluoromethane	NA	NA	NA	0.400	4751.00000	0.3543	1.00	13414.0000	0.4088
Hexachlorobutadiene	NA	NA	NA	0.400	2538.00000	0.4230	1.00	7029.00000	0.4906
Isopropylbenzene	NA	NA	NA	0.400	15284.0000	1.520	1.00	40298.0000	1.611
Methylene Chloride	NA	NA	NA	0.400	4568.00000	0.3406	1.00	8260.00000	0.2517
Naphthalene	NA	NA	NA	0.400	9229.00000	1.538	1.00	22515.0000	1.572
Styrene	NA	NA	NA	0.400	9900.00000	0.9844	1.00	24287.0000	0.9710
Tetrachloroethene	NA	NA	NA	0.400	4325.00000	0.4301	1.00	10079.0000	0.4030
Trichloroethene	NA	NA	NA	0.400	3679.00000	0.2743	1.00	9071.00000	0.2764
Trichlorofluoromethane	NA	NA	NA	0.400	7292.00000	0.5437	1.00	17924.0000	0.5462
Vinyl Acetate	NA	NA	NA	NA	NA	NA	1.00	7577.00000	0.2309
cis-1,2-Dichloroethene	NA	NA	NA	0.400	3659.00000	0.2728	1.00	8390.00000	0.2557
cis-1,3-Dichloropropene	NA	NA	NA	0.400	4526.00000	0.3375	1.00	11506.0000	0.3506
m-,p-Xylene	NA	NA	NA	0.800	13433.0000	0.6679	2.00	32377.0000	0.6472
n-Butylbenzene	NA	NA	NA	0.400	13009.0000	2.168	1.00	34845.0000	2.432
n-Propylbenzene	NA	NA	NA	0.400	18476.0000	3.080	1.00	48642.0000	3.395
o-Xylene	NA	NA	NA	0.400	5859.00000	0.5826	1.00	15518.0000	0.6204
p-Isopropyltoluene	NA	NA	NA	0.400	14328.0000	2.388	1.00	38265.0000	2.671
sec-Butylbenzene	NA	NA	NA	0.400	16524.0000	2.754	1.00	42469.0000	2.964
tert-Butylbenzene	NA	NA	NA	0.400	2576.00000	0.4294	1.00	7428.00000	0.5185
trans-1,2-Dichloroethene	NA	NA	NA	0.400	3024.00000	0.2255	1.00	9194.00000	0.2802
trans-1,3-Dichloropropene	NA	NA	NA	0.400	3804.00000	0.3783	1.00	9621.00000	0.3847

INITIAL CALIBRATION DATA

00095828

Login Number: L0611537 **Instrument ID:** HPMS6

Analytical Method: 8260B **Initial Calibration Date:** 20-NOV-06 14:29

Column ID: F

Analyte	WG227929-05			WG227929-06			WG227929-07		
	CONC	RESP	RF	CONC	RESP	RF	CONC	RESP	RF
Chloroethane	2.00	11586.0000	0.1793	5.00	27684.0000	0.1721	20.0	112133.000	0.1721
Dibromochloromethane	2.00	14323.0000	0.2904	5.00	35499.0000	0.2922	20.0	155526.000	0.3165
Dibromomethane	2.00	8001.00000	0.1238	5.00	21149.0000	0.1315	20.0	83255.0000	0.1278
Dichlorodifluoromethane	2.00	24851.0000	0.3846	5.00	59717.0000	0.3712	20.0	244306.000	0.3749
Hexachlorobutadiene	2.00	13248.0000	0.4592	5.00	30096.0000	0.4212	20.0	136756.000	0.4649
Isopropylbenzene	2.00	81532.0000	1.653	5.00	183968.000	1.514	20.0	841033.000	1.712
Methylene Chloride	2.00	16907.0000	0.2617	5.00	39115.0000	0.2432	20.0	164467.000	0.2524
Naphthalene	2.00	46652.0000	1.617	5.00	115766.000	1.620	20.0	474015.000	1.611
Styrene	2.00	49521.0000	1.004	5.00	118334.000	0.9741	20.0	535314.000	1.090
Tetrachloroethene	2.00	20074.0000	0.4070	5.00	43965.0000	0.3619	20.0	202150.000	0.4114
Trichloroethene	2.00	17598.0000	0.2724	5.00	40251.0000	0.2502	20.0	186867.000	0.2868
Trichlorofluoromethane	2.00	35356.0000	0.5472	5.00	84329.0000	0.5242	20.0	349261.000	0.5360
Vinyl Acetate	2.00	16616.0000	0.2572	5.00	48213.0000	0.2997	20.0	202307.000	0.3105
cis-1,2-Dichloroethene	2.00	17959.0000	0.2780	5.00	41135.0000	0.2557	20.0	176872.000	0.2714
cis-1,3-Dichloropropene	2.00	23638.0000	0.3658	5.00	59574.0000	0.3703	20.0	261560.000	0.4014
m-,p-Xylene	4.00	63751.0000	0.6463	10.0	144655.000	0.5954	40.0	651621.000	0.6631
n-Butylbenzene	2.00	70662.0000	2.449	5.00	157553.000	2.205	20.0	734549.000	2.497
n-Propylbenzene	2.00	98040.0000	3.398	5.00	219472.000	3.071	20.0	1011180.00	3.437
o-Xylene	2.00	30370.0000	0.6158	5.00	70276.0000	0.5785	20.0	312813.000	0.6366
p-Isopropyltoluene	2.00	75323.0000	2.611	5.00	173089.000	2.422	20.0	810445.000	2.755
sec-Butylbenzene	2.00	86528.0000	2.999	5.00	194176.000	2.717	20.0	901756.000	3.065
tert-Butylbenzene	2.00	15751.0000	0.5460	5.00	33475.0000	0.4685	20.0	163102.000	0.5544
trans-1,2-Dichloroethene	2.00	17603.0000	0.2724	5.00	37369.0000	0.2323	20.0	169239.000	0.2597
trans-1,3-Dichloropropene	2.00	21430.0000	0.4345	5.00	53323.0000	0.4389	20.0	235585.000	0.4795

KEMRON Environmental Services

INITIAL CALIBRATION DATA

00095829

Login Number: L0611537
Instrument ID: HPMS6
Analytical Method: 8260B
Initial Calibration Date: 20-NOV-06 14:29
Column ID: F

Analyte	WG227929-08			WG227929-09			WG227929-10		
	CONC	RESP	RF	CONC	RESP	RF	CONC	RESP	RF
Chloroethane	50.0	282301.000	0.1752	100	548634.000	0.1664	150	839569.000	0.1648
Dibromochloromethane	50.0	399871.000	0.3193	100	831461.000	0.3216	150	1305320.00	0.3213
Dibromomethane	50.0	211812.000	0.1314	100	422170.000	0.1281	150	648105.000	0.1272
Dichlorodifluoromethane	50.0	596453.000	0.3701	100	1137480.00	0.3451	150	1712102.00	0.3361
Hexachlorobutadiene	50.0	366854.000	0.4744	100	766160.000	0.4772	150	1207031.00	0.4745
Isopropylbenzene	50.0	2139045.00	1.708	100	4181911.00	1.617	150	6417581.00	1.579
Methylene Chloride	50.0	397403.000	0.2466	100	791153.000	0.2400	150	1225113.00	0.2405
Naphthalene	50.0	1214338.00	1.570	100	2506363.00	1.561	150	3807716.00	1.497
Styrene	50.0	1366904.00	1.092	100	2745387.00	1.062	150	4246907.00	1.045
Tetrachloroethene	50.0	503873.000	0.4024	100	988300.000	0.3822	150	1540428.00	0.3791
Trichloroethene	50.0	471853.000	0.2928	100	922142.000	0.2797	150	1438686.00	0.2825
Trichlorofluoromethane	50.0	870781.000	0.5403	100	1742322.00	0.5285	150	2701650.00	0.5304
Vinyl Acetate	50.0	493685.000	0.3063	100	994073.000	0.3015	150	1550119.00	0.3043
cis-1,2-Dichloroethene	50.0	444956.000	0.2761	100	878233.000	0.2664	150	1363338.00	0.2677
cis-1,3-Dichloropropene	50.0	655328.000	0.4066	100	1326138.00	0.4023	150	2046998.00	0.4019
m-,p-Xylene	100	1656592.00	0.6615	200	3235389.00	0.6256	300	4940454.00	0.6080
n-Butylbenzene	50.0	1886900.00	2.440	100	3708203.00	2.310	150	5652299.00	2.222
n-Propylbenzene	50.0	2568286.00	3.321	100	5033601.00	3.135	150	7594900.00	2.986
o-Xylene	50.0	798940.000	0.6380	100	1592423.00	0.6158	150	2504175.00	0.6163
p-Isopropyltoluene	50.0	2082781.00	2.694	100	4113634.00	2.562	150	6312907.00	2.482
sec-Butylbenzene	50.0	2346914.00	3.035	100	4632105.00	2.885	150	7044482.00	2.769
tert-Butylbenzene	50.0	423143.000	0.5472	100	844075.000	0.5258	150	1335096.00	0.5249
trans-1,2-Dichloroethene	50.0	416473.000	0.2584	100	816129.000	0.2476	150	1246406.00	0.2447
trans-1,3-Dichloropropene	50.0	597204.000	0.4769	100	1200347.00	0.4642	150	1869245.00	0.4600

INITIAL CALIBRATION DATA

00095830

Login Number: L0611537
Instrument ID: HPMS6
Analytical Method: 8260B
Initial Calibration Date: 20-NOV-06 14:29
Column ID: F

Analyte	WG227929-11		
	CONC	RESP	RF
Chloroethane	200	1128989.00	0.1617
Dibromochloromethane	200	1767524.00	0.3121
Dibromomethane	200	866287.000	0.1241
Dichlorodifluoromethane	200	2221055.00	0.3182
Hexachlorobutadiene	200	1628211.00	0.4715
Isopropylbenzene	200	8675145.00	1.532
Methylene Chloride	200	1673686.00	0.2398
Naphthalene	200	4750887.00	1.376
Styrene	200	5745949.00	1.015
Tetrachloroethene	200	2117860.00	0.3739
Trichloroethene	200	1994814.00	0.2858
Trichlorofluoromethane	200	3591552.00	0.5146
Vinyl Acetate	200	1990285.00	0.2851
cis-1,2-Dichloroethene	200	1883057.00	0.2698
cis-1,3-Dichloropropene	200	2790457.00	0.3998
m-,p-Xylene	400	6617291.00	0.5841
n-Butylbenzene	200	7499929.00	2.172
n-Propylbenzene	200	10101613.0	2.925
o-Xylene	200	3426239.00	0.6049
p-Isopropyltoluene	200	8397547.00	2.432
sec-Butylbenzene	200	9444291.00	2.735
tert-Butylbenzene	200	1828460.00	0.5295
trans-1,2-Dichloroethene	200	1735008.00	0.2486
trans-1,3-Dichloropropene	200	2478857.00	0.4376

INITIAL CALIBRATION DATA

00095831

Login Number: L0611537 **Instrument ID:** HPMS8

Analytical Method: 8260B **Initial Calibration Date:** 03-NOV-06 21:42

Column ID: F

Analyte	WG226781-02			WG226781-03			WG226781-04		
	CONC	RESP	RF	CONC	RESP	RF	CONC	RESP	RF
1,1-Dichloroethene	NA	NA	NA	0.400	4516.00000	0.4806	1.00	12185.0000	0.5098
1,2-Dichloropropane	NA	NA	NA	0.400	2631.00000	0.2800	1.00	6807.00000	0.2848
Chloroform	0.300	5004.00000	0.7017	0.400	6206.00000	0.6605	1.00	15559.0000	0.6509
Ethylbenzene	NA	NA	NA	0.400	5467.00000	0.7385	1.00	12369.0000	0.6700
Toluene	NA	NA	NA	0.400	13281.0000	1.794	1.00	33414.0000	1.810
Vinyl Chloride	NA	NA	NA	0.400	3464.00000	0.3687	1.00	8380.00000	0.3506
1,1,2,2-Tetrachloroethane	NA	NA	NA	0.400	2231.00000	0.5191	1.00	7039.00000	0.6504
1,1-Dichloroethane	NA	NA	NA	0.400	5828.00000	0.6203	1.00	13843.0000	0.5791
Bromoform	NA	NA	NA	NA	NA	NA	1.00	4094.00000	0.2218
Chlorobenzene	NA	NA	NA	0.400	9005.00000	1.216	1.00	23258.0000	1.260
Chloromethane	NA	NA	NA	NA	NA	NA	1.00	8593.00000	0.3595
1,1,1,2-Tetrachloroethane	NA	NA	NA	0.400	3091.00000	0.4175	1.00	8265.00000	0.4477
1,1,1-Trichloroethane	NA	NA	NA	0.400	5523.00000	0.5878	1.00	14485.0000	0.6060
1,1,2-Trichloroethane	NA	NA	NA	0.400	1928.00000	0.2604	1.00	4984.00000	0.2700
1,1-Dichloropropene	NA	NA	NA	0.400	4198.00000	0.4468	1.00	11335.0000	0.4742
1,2,3-Trichlorobenzene	0.300	3869.00000	1.206	0.400	4868.00000	1.133	1.00	12226.0000	1.130
1,2,3-Trichloropropane	NA	NA	NA	NA	NA	NA	1.00	2406.00000	0.2223
1,2,4-Trichlorobenzene	NA	NA	NA	0.400	5782.00000	1.345	1.00	14385.0000	1.329
1,2,4-Trimethylbenzene	NA	NA	NA	0.400	14547.0000	3.385	1.00	36829.0000	3.403
1,2-Dibromo-3-Chloropropane	NA	NA	NA	NA	NA	NA	NA	NA	NA
1,2-Dibromoethane	NA	NA	NA	0.400	1799.00000	0.2430	1.00	5272.00000	0.2856
1,2-Dichlorobenzene	0.300	5398.00000	1.682	0.400	7476.00000	1.739	1.00	19536.0000	1.805
1,2-Dichloroethane	NA	NA	NA	0.400	4155.00000	0.4422	1.00	10804.0000	0.4520
1,3,5-Trimethylbenzene	NA	NA	NA	0.400	13257.0000	3.084	1.00	34156.0000	3.156
1,3-Dichlorobenzene	NA	NA	NA	0.400	7571.00000	1.762	1.00	21452.0000	1.982
1,3-Dichloropropane	NA	NA	NA	0.400	3770.00000	0.5093	1.00	9319.00000	0.5048
1,4-Dichlorobenzene	0.300	7026.00000	2.189	0.400	8658.00000	2.014	1.00	22489.0000	2.078
2,2-Dichloropropane	NA	NA	NA	0.400	4713.00000	0.5016	1.00	12026.0000	0.5031
2-Butanone	NA	NA	NA	NA	NA	NA	NA	NA	NA
2-Chloroethyl Vinyl Ether	NA	NA	NA	NA	NA	NA	NA	NA	NA
2-Chlorotoluene	NA	NA	NA	0.400	12740.0000	2.964	1.00	32156.0000	2.971
2-Hexanone	NA	NA	NA	NA	NA	NA	NA	NA	NA
4-Chlorotoluene	NA	NA	NA	0.400	13281.0000	3.090	1.00	33532.0000	3.098
4-Methyl-2-Pentanone	NA	NA	NA	NA	NA	NA	NA	NA	NA
Acetone	NA	NA	NA	NA	NA	NA	NA	NA	NA
Benzene	NA	NA	NA	0.400	12994.0000	1.383	1.00	30612.0000	1.281
Bromobenzene	0.300	2684.00000	0.8363	0.400	3627.00000	0.8439	1.00	10485.0000	0.9688
Bromochloromethane	NA	NA	NA	0.400	1717.00000	0.1827	1.00	4097.00000	0.1714
Bromodichloromethane	NA	NA	NA	0.400	3935.00000	0.4188	1.00	10730.0000	0.4489
Bromomethane	NA	NA	NA	NA	NA	NA	1.00	3681.00000	0.1540
Carbon Disulfide	NA	NA	NA	NA	NA	NA	1.00	20111.0000	0.8414
Carbon Tetrachloride	NA	NA	NA	0.400	4628.00000	0.4926	1.00	12242.0000	0.5122

KEMRON FORMS - Modified 10/13/2006
Version 1.6 PDF File ID: 637631
Report generated 12/01/2006 16:01

INITIAL CALIBRATION DATA

00095832

Login Number: L0611537 **Instrument ID:** HPMS8

Analytical Method: 8260B **Initial Calibration Date:** 03-NOV-06 21:42

Column ID: F

Analyte	WG226781-05			WG226781-06			WG226781-07		
	CONC	RESP	RF	CONC	RESP	RF	CONC	RESP	RF
1,1-Dichloroethene	2.00	23880.0000	0.5019	5.00	61526.0000	0.5149	20.0	265707.000	0.5423
1,2-Dichloropropane	2.00	13122.0000	0.2758	5.00	35377.0000	0.2961	20.0	146076.000	0.2981
Chloroform	2.00	30699.0000	0.6452	5.00	79324.0000	0.6638	20.0	327814.000	0.6691
Ethylbenzene	2.00	23090.0000	0.6303	5.00	62232.0000	0.6650	20.0	258592.000	0.6879
Toluene	2.00	63891.0000	1.744	5.00	165698.000	1.771	20.0	682589.000	1.816
Vinyl Chloride	2.00	16084.0000	0.3380	5.00	37097.0000	0.3105	20.0	145823.000	0.2976
1,1,2,2-Tetrachloroethane	2.00	10697.0000	0.5020	5.00	29463.0000	0.5446	20.0	108329.000	0.5019
1,1-Dichloroethane	2.00	27637.0000	0.5808	5.00	71452.0000	0.5980	20.0	294961.000	0.6020
Bromoform	2.00	7409.00000	0.2022	5.00	20564.0000	0.2198	20.0	84322.0000	0.2243
Chlorobenzene	2.00	43081.0000	1.176	5.00	114551.000	1.224	20.0	456752.000	1.215
Chloromethane	2.00	18247.0000	0.3835	5.00	40800.0000	0.3414	20.0	169189.000	0.3453
1,1,1,2-Tetrachloroethane	2.00	15897.0000	0.4340	5.00	41781.0000	0.4465	20.0	166853.000	0.4438
1,1,1-Trichloroethane	2.00	28222.0000	0.5931	5.00	76327.0000	0.6388	20.0	321516.000	0.6562
1,1,2-Trichloroethane	2.00	9527.00000	0.2601	5.00	26757.0000	0.2859	20.0	101627.000	0.2703
1,1-Dichloropropene	2.00	20945.0000	0.4402	5.00	55877.0000	0.4676	20.0	242575.000	0.4951
1,2,3-Trichlorobenzene	2.00	22138.0000	1.039	5.00	53733.0000	0.9932	20.0	205872.000	0.9538
1,2,3-Trichloropropane	2.00	3851.00000	0.1807	5.00	9442.00000	0.1745	20.0	37661.0000	0.1745
1,2,4-Trichlorobenzene	2.00	24981.0000	1.172	5.00	64552.0000	1.193	20.0	249212.000	1.155
1,2,4-Trimethylbenzene	2.00	69592.0000	3.266	5.00	183586.000	3.393	20.0	754629.000	3.496
1,2-Dibromo-3-Chloropropane	2.00	2362.00000	0.1108	5.00	6361.00000	0.1176	20.0	22501.0000	0.1042
1,2-Dibromoethane	2.00	9821.00000	0.2681	5.00	26083.0000	0.2787	20.0	103178.000	0.2745
1,2-Dichlorobenzene	2.00	33999.0000	1.595	5.00	88555.0000	1.637	20.0	348036.000	1.612
1,2-Dichloroethane	2.00	22405.0000	0.4709	5.00	59471.0000	0.4977	20.0	226676.000	0.4627
1,3,5-Trimethylbenzene	2.00	63977.0000	3.002	5.00	171936.000	3.178	20.0	726173.000	3.364
1,3-Dichlorobenzene	2.00	36812.0000	1.727	5.00	96444.0000	1.783	20.0	393212.000	1.822
1,3-Dichloropropane	2.00	18132.0000	0.4950	5.00	47863.0000	0.5115	20.0	187442.000	0.4986
1,4-Dichlorobenzene	2.00	39032.0000	1.832	5.00	100250.000	1.853	20.0	398195.000	1.845
2,2-Dichloropropane	2.00	24720.0000	0.5195	5.00	65579.0000	0.5488	20.0	286643.000	0.5851
2-Butanone	NA	NA	NA	5.00	7105.00000	0.05950	20.0	27067.0000	0.05520
2-Chloroethyl Vinyl Ether	2.00	2289.00000	0.04810	5.00	8349.00000	0.06990	20.0	41583.0000	0.08490
2-Chlorotoluene	2.00	60989.0000	2.862	5.00	164773.000	3.046	20.0	658405.000	3.050
2-Hexanone	NA	NA	NA	5.00	12303.0000	0.1315	20.0	48037.0000	0.1278
4-Chlorotoluene	2.00	58281.0000	2.735	5.00	154168.000	2.850	20.0	642517.000	2.977
4-Methyl-2-Pentanone	NA	NA	NA	5.00	6263.00000	0.05240	20.0	25009.0000	0.05100
Acetone	NA	NA	NA	5.00	6269.00000	0.05250	20.0	22090.0000	0.04510
Benzene	2.00	57961.0000	1.218	5.00	152236.000	1.274	20.0	629621.000	1.285
Bromobenzene	2.00	18328.0000	0.8600	5.00	49551.0000	0.9159	20.0	196031.000	0.9082
Bromochloromethane	2.00	8832.00000	0.1856	5.00	23761.0000	0.1988	20.0	91447.0000	0.1866
Bromodichloromethane	2.00	20731.0000	0.4357	5.00	55505.0000	0.4645	20.0	229373.000	0.4682
Bromomethane	2.00	7779.00000	0.1635	5.00	19836.0000	0.1660	20.0	91229.0000	0.1862
Carbon Disulfide	2.00	39399.0000	0.8280	5.00	111857.000	0.9361	20.0	470744.000	0.9608
Carbon Tetrachloride	2.00	23338.0000	0.4905	5.00	62919.0000	0.5266	20.0	271042.000	0.5532

KEMRON FORMS - Modified 10/13/2006
Version 1.6 PDF File ID: 637631
Report generated 12/01/2006 16:01

INITIAL CALIBRATION DATA

00095833

Login Number: L0611537 **Instrument ID:** HPMS8

Analytical Method: 8260B **Initial Calibration Date:** 03-NOV-06 21:42

Column ID: F

Analyte	WG226781-08			WG226781-09			WG226781-10		
	CONC	RESP	RF	CONC	RESP	RF	CONC	RESP	RF
1,1-Dichloroethene	50.0	683150.000	0.5534	100	1317696.00	0.5249	200	2551714.00	0.5151
1,2-Dichloropropane	50.0	369841.000	0.2996	100	722796.000	0.2880	200	1417509.00	0.2861
Chloroform	50.0	806442.000	0.6532	100	1534281.00	0.6112	200	2884449.00	0.5823
Ethylbenzene	50.0	624305.000	0.6438	100	1183355.00	0.5930	200	2118291.00	0.5273
Toluene	50.0	1674507.00	1.727	100	3107295.00	1.557	200	5393251.00	1.343
Vinyl Chloride	50.0	342434.000	0.2774	100	650500.000	0.2591	NA	NA	NA
1,1,2,2-Tetrachloroethane	50.0	316288.000	0.5454	100	634601.000	0.5337	200	1273721.00	0.5236
1,1-Dichloroethane	50.0	728812.000	0.5903	100	1403534.00	0.5591	200	2808616.00	0.5670
Bromoform	50.0	246457.000	0.2542	100	497519.000	0.2493	200	987453.000	0.2458
Chlorobenzene	50.0	1114581.00	1.149	100	2078210.00	1.042	200	3627287.00	0.9030
Chloromethane	50.0	402424.000	0.3260	100	797028.000	0.3175	200	1624386.00	0.3279
1,1,1,2-Tetrachloroethane	50.0	417304.000	0.4303	100	786395.000	0.3941	200	1391748.00	0.3465
1,1,1-Trichloroethane	50.0	784661.000	0.6356	100	1487611.00	0.5926	200	2733553.00	0.5518
1,1,2-Trichloroethane	50.0	277154.000	0.2858	100	546675.000	0.2740	200	1060458.00	0.2640
1,1-Dichloropropene	50.0	602633.000	0.4881	100	1155196.00	0.4602	200	2190526.00	0.4422
1,2,3-Trichlorobenzene	50.0	564767.000	0.9739	100	1076873.00	0.9057	200	1902885.00	0.7823
1,2,3-Trichloropropane	50.0	107840.000	0.1860	100	218305.000	0.1836	200	430382.000	0.1769
1,2,4-Trichlorobenzene	50.0	662614.000	1.143	100	1270295.00	1.068	200	2248348.00	0.9243
1,2,4-Trimethylbenzene	50.0	1831003.00	3.158	100	3367991.00	2.833	200	5649695.00	2.323
1,2-Dibromo-3-Chloropropane	50.0	70181.0000	0.1210	100	144174.000	0.1213	200	276172.000	0.1135
1,2-Dibromoethane	50.0	286401.000	0.2954	100	572521.000	0.2869	200	1111228.00	0.2766
1,2-Dichlorobenzene	50.0	902084.000	1.556	100	1721980.00	1.448	200	3130009.00	1.287
1,2-Dichloroethane	50.0	589393.000	0.4774	100	1117757.00	0.4453	200	2078496.00	0.4196
1,3,5-Trimethylbenzene	50.0	1771631.00	3.055	100	3288509.00	2.766	200	5585685.00	2.296
1,3-Dichlorobenzene	50.0	999406.000	1.724	100	1898198.00	1.597	200	3433705.00	1.412
1,3-Dichloropropane	50.0	503514.000	0.5193	100	987956.000	0.4951	200	1886773.00	0.4697
1,4-Dichlorobenzene	50.0	1010395.00	1.742	100	1919627.00	1.615	200	3434071.00	1.412
2,2-Dichloropropane	50.0	718692.000	0.5821	100	1355356.00	0.5400	200	2555760.00	0.5159
2-Butanone	50.0	85425.0000	0.06920	100	174948.000	0.06970	200	343950.000	0.06940
2-Chloroethyl Vinyl Ether	50.0	150851.000	0.1222	100	321027.000	0.1279	200	658044.000	0.1328
2-Chlorotoluene	50.0	1532083.00	2.642	100	2970831.00	2.499	200	5076050.00	2.087
2-Hexanone	50.0	146015.000	0.1506	100	305581.000	0.1531	200	608242.000	0.1514
4-Chlorotoluene	50.0	1521044.00	2.623	100	2970950.00	2.499	200	4556361.00	1.873
4-Methyl-2-Pentanone	50.0	79005.0000	0.06400	100	162653.000	0.06480	200	321457.000	0.06490
Acetone	50.0	65154.0000	0.05280	100	130676.000	0.05210	200	244925.000	0.04940
Benzene	50.0	1547722.00	1.254	100	2909164.00	1.159	200	5214630.00	1.053
Bromobenzene	50.0	507978.000	0.8760	100	984822.000	0.8283	200	1852411.00	0.7615
Bromochloromethane	50.0	235162.000	0.1905	100	452547.000	0.1803	200	875638.000	0.1768
Bromodichloromethane	50.0	593206.000	0.4805	100	1151811.00	0.4589	200	2184848.00	0.4411
Bromomethane	50.0	257573.000	0.2086	100	539688.000	0.2150	200	1104288.00	0.2229
Carbon Disulfide	50.0	1186035.00	0.9607	100	2253693.00	0.8978	200	4206807.00	0.8492
Carbon Tetrachloride	50.0	663637.000	0.5376	100	1246953.00	0.4968	200	2315692.00	0.4675

KEMRON FORMS - Modified 10/13/2006
Version 1.6 PDF File ID: 637631
Report generated 12/01/2006 16:01

KEMRON Environmental Services

INITIAL CALIBRATION DATA

00095834

Login Number: L0611537
Analytical Method: 8260B

Instrument ID: HPMS8
Initial Calibration Date: 03-NOV-06 21:42
Column ID: F

Analyte	WG226781-02			WG226781-03			WG226781-04		
	CONC	RESP	RF	CONC	RESP	RF	CONC	RESP	RF
Chloroethane	NA	NA	NA	0.400	2143.00000	0.2281	1.00	5306.00000	0.2220
Dibromochloromethane	NA	NA	NA	0.400	2270.00000	0.3066	1.00	6357.00000	0.3443
Dibromomethane	NA	NA	NA	0.400	1144.00000	0.1218	1.00	3549.00000	0.1485
Dichlorodifluoromethane	NA	NA	NA	0.400	4907.00000	0.5222	1.00	12562.0000	0.5256
Hexachlorobutadiene	NA	NA	NA	0.400	1912.00000	0.4449	1.00	5006.00000	0.4625
Isopropylbenzene	NA	NA	NA	0.400	14390.0000	1.944	1.00	38372.0000	2.078
Methylene Chloride	NA	NA	NA	0.400	3931.00000	0.4184	1.00	8750.00000	0.3661
Naphthalene	NA	NA	NA	0.400	9688.00000	2.254	1.00	24464.0000	2.260
Styrene	NA	NA	NA	0.400	8533.00000	1.153	1.00	22790.0000	1.234
Tetrachloroethene	NA	NA	NA	0.400	2470.00000	0.3337	1.00	6782.00000	0.3674
Trichloroethene	NA	NA	NA	0.400	2997.00000	0.3190	1.00	8122.00000	0.3398
Trichlorofluoromethane	NA	NA	NA	0.400	6530.00000	0.6950	1.00	15306.0000	0.6404
Vinyl Acetate	NA	NA	NA	NA	NA	NA	NA	NA	NA
cis-1,2-Dichloroethene	NA	NA	NA	0.400	4511.00000	0.4801	1.00	11433.0000	0.4783
cis-1,3-Dichloropropene	NA	NA	NA	0.400	4284.00000	0.4559	1.00	11800.0000	0.4937
m-,p-Xylene	NA	NA	NA	0.800	12801.0000	0.8646	2.00	31209.0000	0.8452
n-Butylbenzene	NA	NA	NA	0.400	12466.0000	2.900	1.00	30526.0000	2.821
n-Propylbenzene	NA	NA	NA	0.400	17661.0000	4.109	1.00	46506.0000	4.297
o-Xylene	NA	NA	NA	0.400	5825.00000	0.7869	1.00	14318.0000	0.7755
p-Isopropyltoluene	NA	NA	NA	0.400	13197.0000	3.071	1.00	33644.0000	3.109
sec-Butylbenzene	NA	NA	NA	0.400	15347.0000	3.571	1.00	38052.0000	3.516
tert-Butylbenzene	NA	NA	NA	0.400	2598.00000	0.6045	1.00	6204.00000	0.5732
trans-1,2-Dichloroethene	NA	NA	NA	0.400	4464.00000	0.4751	1.00	11283.0000	0.4720
trans-1,3-Dichloropropene	NA	NA	NA	0.400	4435.00000	0.5991	1.00	10616.0000	0.5750

INITIAL CALIBRATION DATA

00095835

Login Number: L0611537 **Instrument ID:** HPMS8

Analytical Method: 8260B **Initial Calibration Date:** 03-NOV-06 21:42

Column ID: F

Analyte	WG226781-05			WG226781-06			WG226781-07		
	CONC	RESP	RF	CONC	RESP	RF	CONC	RESP	RF
Chloroethane	2.00	11494.0000	0.2416	5.00	27335.0000	0.2288	20.0	113376.000	0.2314
Dibromochloromethane	2.00	12085.0000	0.3299	5.00	33595.0000	0.3590	20.0	133236.000	0.3544
Dibromomethane	2.00	7176.00000	0.1508	5.00	19463.0000	0.1629	20.0	76024.0000	0.1552
Dichlorodifluoromethane	2.00	26349.0000	0.5538	5.00	60842.0000	0.5092	20.0	254703.000	0.5199
Hexachlorobutadiene	2.00	9418.00000	0.4419	5.00	24671.0000	0.4560	20.0	101410.000	0.4698
Isopropylbenzene	2.00	70992.0000	1.938	5.00	193754.000	2.071	20.0	815324.000	2.169
Methylene Chloride	2.00	15909.0000	0.3343	5.00	39636.0000	0.3317	20.0	159390.000	0.3253
Naphthalene	2.00	42251.0000	1.983	5.00	112752.000	2.084	20.0	416677.000	1.930
Styrene	2.00	42313.0000	1.155	5.00	121649.000	1.300	20.0	518323.000	1.379
Tetrachloroethene	2.00	13634.0000	0.3722	5.00	35168.0000	0.3758	20.0	148981.000	0.3963
Trichloroethene	2.00	15129.0000	0.3180	5.00	40522.0000	0.3391	20.0	167253.000	0.3414
Trichlorofluoromethane	2.00	32130.0000	0.6753	5.00	78761.0000	0.6591	20.0	329413.000	0.6723
Vinyl Acetate	2.00	16470.0000	0.3461	5.00	42351.0000	0.3544	20.0	178072.000	0.3635
cis-1,2-Dichloroethene	2.00	22176.0000	0.4661	5.00	60657.0000	0.5076	20.0	250322.000	0.5109
cis-1,3-Dichloropropene	2.00	22697.0000	0.4770	5.00	60193.0000	0.5037	20.0	248197.000	0.5066
m-,p-Xylene	4.00	59021.0000	0.8056	10.0	153752.000	0.8215	40.0	640489.000	0.8519
n-Butylbenzene	2.00	57051.0000	2.677	5.00	150627.000	2.784	20.0	634413.000	2.939
n-Propylbenzene	2.00	88092.0000	4.134	5.00	234548.000	4.335	20.0	984795.000	4.563
o-Xylene	2.00	27866.0000	0.7607	5.00	74321.0000	0.7942	20.0	311354.000	0.8282
p-Isopropyltoluene	2.00	62358.0000	2.926	5.00	166776.000	3.083	20.0	699245.000	3.240
sec-Butylbenzene	2.00	71367.0000	3.349	5.00	191346.000	3.537	20.0	804272.000	3.726
tert-Butylbenzene	2.00	12061.0000	0.5660	5.00	33091.0000	0.6116	20.0	138060.000	0.6396
trans-1,2-Dichloroethene	2.00	21963.0000	0.4616	5.00	59572.0000	0.4985	20.0	244767.000	0.4996
trans-1,3-Dichloropropene	2.00	20973.0000	0.5725	5.00	56049.0000	0.5990	20.0	225533.000	0.5999

KEMRON FORMS - Modified 10/13/2006
Version 1.6 PDF File ID: 637631
Report generated 12/01/2006 16:01

INITIAL CALIBRATION DATA

00095836

Login Number: L0611537 **Instrument ID:** HPMS8

Analytical Method: 8260B **Initial Calibration Date:** 03-NOV-06 21:42

Column ID: F

Analyte	WG226781-08			WG226781-09			WG226781-10		
	CONC	RESP	RF	CONC	RESP	RF	CONC	RESP	RF
Chloroethane	50.0	287098.000	0.2326	100	561826.000	0.2238	200	1101585.00	0.2224
Dibromochloromethane	50.0	372681.000	0.3843	100	736856.000	0.3693	200	1433517.00	0.3569
Dibromomethane	50.0	203911.000	0.1652	100	396469.000	0.1579	200	752834.000	0.1520
Dichlorodifluoromethane	50.0	620284.000	0.5024	100	1177187.00	0.4690	200	2236836.00	0.4515
Hexachlorobutadiene	50.0	260896.000	0.4499	100	507008.000	0.4264	200	955009.000	0.3926
Isopropylbenzene	50.0	1964000.00	2.025	100	3634156.00	1.821	200	6082842.00	1.514
Methylene Chloride	50.0	400222.000	0.3242	100	775817.000	0.3091	200	1522202.00	0.3073
Naphthalene	50.0	1201911.00	2.073	100	2241682.00	1.885	200	3853635.00	1.584
Styrene	50.0	1303856.00	1.345	100	2485901.00	1.246	200	4399878.00	1.095
Tetrachloroethene	50.0	370443.000	0.3820	100	702588.000	0.3521	200	1314419.00	0.3272
Trichloroethene	50.0	417710.000	0.3383	100	804703.000	0.3206	200	1506976.00	0.3042
Trichlorofluoromethane	50.0	842725.000	0.6826	100	1614773.00	0.6433	200	3176905.00	0.6413
Vinyl Acetate	50.0	498456.000	0.4038	100	939918.000	0.3744	200	1899761.00	0.3835
cis-1,2-Dichloroethene	50.0	689064.000	0.5581	100	1328856.00	0.5294	200	2586318.00	0.5221
cis-1,3-Dichloropropene	50.0	654005.000	0.5297	100	1264169.00	0.5036	200	2395545.00	0.4836
m-,p-Xylene	100	1547145.00	0.7978	200	2845429.00	0.7130	400	4765298.00	0.5931
n-Butylbenzene	50.0	1573147.00	2.713	100	2932903.00	2.467	200	5117860.00	2.104
n-Propylbenzene	50.0	2389181.00	4.120	100	4342777.00	3.653	200	6991127.00	2.874
o-Xylene	50.0	773591.000	0.7978	100	1502109.00	0.7528	200	2763427.00	0.6879
p-Isopropyltoluene	50.0	1719975.00	2.966	100	3189098.00	2.682	200	5424760.00	2.230
sec-Butylbenzene	50.0	1978822.00	3.413	100	3679737.00	3.095	200	6249917.00	2.569
tert-Butylbenzene	50.0	343957.000	0.5932	100	668856.000	0.5626	200	1281356.00	0.5268
trans-1,2-Dichloroethene	50.0	612805.000	0.4964	100	1163014.00	0.4633	200	2248157.00	0.4538
trans-1,3-Dichloropropene	50.0	601139.000	0.6199	100	1164959.00	0.5838	200	2207011.00	0.5494

KEMRON FORMS - Modified 10/13/2006
Version 1.6 PDF File ID: 637631
Report generated 12/01/2006 16:01

KEMRON Environmental Services

ALTERNATE SOURCE CALIBRATION REPORT

00095837

Login Number: L0611537 Run Date: 11/20/2006 Sample ID: WG227929-12
Instrument ID: HPMS6 Run Time: 17:01 Method: 8260B
File ID: 6M62051 Analyst: CMS
ICal Workgroup: WG227929 Cal ID: HPMS6 - 20-NOV-06

Analyte		Expected	Found	Units	RF	%D	UCL	Q
Chloroform	CCC	20.0	20.2	ug/L	0.497	1.00	30	
1,1-Dichloroethene	CCC	20.0	21.0	ug/L	0.387	5.00	30	
1,2-Dichloropropane	CCC	20.0	20.7	ug/L	0.228	3.30	30	
Ethylbenzene	CCC	20.0	21.8	ug/L	0.555	8.80	30	
Toluene	CCC	20.0	20.8	ug/L	1.42	4.20	30	
Vinyl Chloride	CCC	20.0	21.3	ug/L	0.195	6.60	30	
Bromoform	SPCC	20.0	19.8	ug/L	0.193	1.00	30	
Chlorobenzene	SPCC	20.0	20.8	ug/L	0.986	4.00	30	
Chloromethane	SPCC	20.0	20.5	ug/L	0.254	2.30	30	
1,1-Dichloroethane	SPCC	20.0	21.1	ug/L	0.456	5.70	30	
1,1,2,2-Tetrachloroethane	SPCC	20.0	20.3	ug/L	0.394	1.50	30	
Acetone		20.0	23.5	ug/L	0.0412	17.4	30	
Benzene		20.0	20.6	ug/L	0.965	3.10	30	
Bromobenzene		20.0	20.0	ug/L	0.738	0.200	30	
Bromochloromethane		20.0	20.8	ug/L	0.163	4.20	30	
Bromodichloromethane		20.0	21.2	ug/L	0.365	5.80	30	
Bromomethane		20.0	21.0	ug/L	0.176	5.10	30	
2-Butanone		20.0	23.8	ug/L	0.0569	18.8	30	
n-Butylbenzene		20.0	21.3	ug/L	2.47	6.40	30	
sec-Butylbenzene		20.0	21.2	ug/L	3.06	6.10	30	
tert-Butylbenzene		20.0	21.4	ug/L	0.553	7.20	30	
Carbon Disulfide		20.0	19.8	ug/L	0.655	0.900	30	
Carbon Tetrachloride		20.0	21.2	ug/L	0.429	6.10	30	
Dibromochloromethane		20.0	21.2	ug/L	0.318	5.80	30	
Chloroethane		20.0	20.9	ug/L	0.175	4.50	30	
2-Chloroethyl Vinyl Ether		20.0	17.9	ug/L	0.0618	10.5	30	
2-Chlorotoluene		20.0	20.2	ug/L	2.09	0.800	30	
4-Chlorotoluene		20.0	21.4	ug/L	2.22	6.80	30	
1,2-Dibromo-3-Chloropropane		20.0	21.4	ug/L	0.0834	7.00	30	
1,2-Dibromoethane		20.0	20.8	ug/L	0.241	3.90	30	
Dibromomethane		20.0	20.8	ug/L	0.131	4.20	30	
1,2-Dichlorobenzene		20.0	20.3	ug/L	1.33	1.70	30	
1,3-Dichlorobenzene		20.0	20.6	ug/L	1.49	3.00	30	
1,4-Dichlorobenzene		20.0	20.2	ug/L	1.52	0.800	30	
Dichlorodifluoromethane		20.0	20.7	ug/L	0.375	3.50	30	
1,2-Dichloroethane		20.0	20.1	ug/L	0.339	0.400	30	
cis-1,2-Dichloroethene		20.0	20.9	ug/L	0.280	4.30	30	
trans-1,2-Dichloroethene		20.0	20.6	ug/L	0.260	3.20	30	
1,3-Dichloropropane		20.0	21.2	ug/L	0.412	5.90	30	
2,2-Dichloropropane		20.0	22.0	ug/L	0.464	10.1	30	
cis-1,3-Dichloropropene		20.0	21.1	ug/L	0.402	5.40	30	
trans-1,3-Dichloropropene		20.0	20.2	ug/L	0.444	1.00	30	

KEMRON FORMS - Modified 11/21/2006
Version 1.5 PDF File ID: 637632
Report generated 12/01/2006 16:01

KEMRON Environmental Services

ALTERNATE SOURCE CALIBRATION REPORT

00095838

Login Number: L0611537 Run Date: 11/20/2006 Sample ID: WG227929-12
Instrument ID: HPMS6 Run Time: 17:01 Method: 8260B
File ID: 6M62051 Analyst: CMS
ICal Workgroup: WG227929 Cal ID: HPMS6 - 20-NOV-06

Analyte		Expected	Found	Units	RF	%D	UCL	Q
1,1-Dichloropropene		20.0	21.2	ug/L	0.383	6.10	30	
2-Hexanone		20.0	18.9	ug/L	0.0926	5.60	30	
Hexachlorobutadiene		20.0	21.2	ug/L	0.489	5.90	30	
Isopropylbenzene		20.0	19.5	ug/L	1.56	2.70	30	
p-Isopropyltoluene		20.0	20.6	ug/L	2.64	3.20	30	
4-Methyl-2-Pentanone		20.0	19.4	ug/L	0.0433	3.00	30	
Methylene Chloride		20.0	19.8	ug/L	0.255	0.900	30	
Naphthalene		20.0	21.0	ug/L	1.63	4.90	30	
n-Propylbenzene		20.0	21.0	ug/L	3.36	5.10	30	
Styrene		20.0	21.3	ug/L	1.09	6.60	30	
1,1,1,2-Tetrachloroethane		20.0	21.1	ug/L	0.385	5.50	30	
Tetrachloroethene		20.0	20.6	ug/L	0.407	3.10	30	
1,2,3-Trichlorobenzene		20.0	20.8	ug/L	0.867	3.90	30	
1,2,4-Trichlorobenzene		20.0	21.0	ug/L	1.04	5.10	30	
1,1,1-Trichloroethane		20.0	20.9	ug/L	0.482	4.50	30	
1,1,2-Trichloroethane		20.0	21.2	ug/L	0.229	5.90	30	
Trichloroethene		20.0	21.6	ug/L	0.300	8.00	30	
Trichlorofluoromethane		20.0	18.4	ug/L	0.491	8.10	30	
1,2,3-Trichloropropane		20.0	20.2	ug/L	0.318	0.900	30	
1,2,4-Trimethylbenzene		20.0	20.9	ug/L	2.64	4.50	30	
1,3,5-Trimethylbenzene		20.0	21.1	ug/L	2.51	5.70	30	
Vinyl Acetate		20.0	13.7	ug/L	0.197	31.5	40	
o-Xylene		20.0	20.8	ug/L	0.638	4.20	30	
m-,p-Xylene		40.0	42.7	ug/L	0.676	6.70	30	

* Exceeds %D Limit

CCC Calibration Check Compounds
SPCC System Performance Check Compounds

KEMRON FORMS - Modified 11/21/2006
Version 1.5 PDF File ID: 637632
Report generated 12/01/2006 16:01

KEMRON Environmental Services

ALTERNATE SOURCE CALIBRATION REPORT

00095839

Login Number: L0611537 Run Date: 11/04/2006 Sample ID: WG226781-11

Instrument ID: HPMS8 Run Time: 13:11 Method: 8260B

File ID: 8M331761 Analyst: MES

ICal Workgroup: WG226781 Cal ID: HPMS8 - 03-NOV-06

Analyte		Expected	Found	Units	RF	%D	UCL	Q
Chloroform	CCC	20.0	20.6	ug/L	0.670	3.20	30	
1,1-Dichloroethene	CCC	20.0	20.3	ug/L	0.526	1.50	30	
1,2-Dichloropropane	CCC	20.0	21.5	ug/L	0.310	7.30	30	
Ethylbenzene	CCC	20.0	21.3	ug/L	0.685	6.30	30	
Toluene	CCC	20.0	20.9	ug/L	1.77	4.40	30	
Vinyl Chloride	CCC	20.0	17.7	ug/L	0.278	11.7	30	
Bromoform	SPCC	20.0	21.3	ug/L	0.246	6.30	30	
Chlorobenzene	SPCC	20.0	20.9	ug/L	1.20	4.50	30	
Chloromethane	SPCC	20.0	19.9	ug/L	0.341	0.500	30	
1,1-Dichloroethane	SPCC	20.0	20.5	ug/L	0.601	2.30	30	
1,1,2,2-Tetrachloroethane	SPCC	20.0	21.1	ug/L	0.571	5.70	30	
Acetone		20.0	25.9	ug/L	0.0653	29.6	30	
Benzene		20.0	20.5	ug/L	1.27	2.50	30	
Bromobenzene		20.0	21.3	ug/L	0.924	6.60	30	
Bromochloromethane		20.0	21.2	ug/L	0.195	6.00	30	
Bromodichloromethane		20.0	22.4	ug/L	0.506	11.9	30	
Bromomethane		20.0	20.3	ug/L	0.191	1.60	30	
2-Butanone		20.0	24.7	ug/L	0.0797	23.4	30	
n-Butylbenzene		20.0	21.1	ug/L	2.83	5.60	30	
sec-Butylbenzene		20.0	21.2	ug/L	3.55	6.00	30	
tert-Butylbenzene		20.0	20.7	ug/L	0.604	3.40	30	
Carbon Disulfide		20.0	20.4	ug/L	0.915	2.10	30	
Carbon Tetrachloride		20.0	21.5	ug/L	0.549	7.70	30	
Dibromochloromethane		20.0	22.5	ug/L	0.394	12.3	30	
Chloroethane		20.0	18.8	ug/L	0.216	5.80	30	
2-Chloroethyl Vinyl Ether		20.0	18.2	ug/L	0.0966	9.10	30	
2-Chlorotoluene		20.0	21.6	ug/L	2.98	7.80	30	
4-Chlorotoluene		20.0	20.8	ug/L	2.83	4.10	30	
1,2-Dibromo-3-Chloropropane		20.0	21.5	ug/L	0.123	7.40	30	
1,2-Dibromoethane		20.0	22.1	ug/L	0.305	10.5	30	
Dibromomethane		20.0	22.0	ug/L	0.167	10.1	30	
1,2-Dichlorobenzene		20.0	20.2	ug/L	1.61	1.10	30	
1,3-Dichlorobenzene		20.0	20.7	ug/L	1.78	3.40	30	
1,4-Dichlorobenzene		20.0	19.8	ug/L	1.83	0.800	30	
Dichlorodifluoromethane		20.0	17.5	ug/L	0.444	12.4	30	
1,2-Dichloroethane		20.0	21.7	ug/L	0.497	8.40	30	
cis-1,2-Dichloroethene		20.0	19.7	ug/L	0.500	1.30	30	
trans-1,2-Dichloroethene		20.0	20.2	ug/L	0.483	1.20	30	
1,3-Dichloropropane		20.0	21.9	ug/L	0.548	9.40	30	
2,2-Dichloropropane		20.0	22.4	ug/L	0.601	11.9	30	
cis-1,3-Dichloropropene		20.0	22.4	ug/L	0.554	12.0	30	
trans-1,3-Dichloropropene		20.0	20.5	ug/L	0.602	2.50	30	

KEMRON FORMS - Modified 11/21/2006
Version 1.5 PDF File ID: 637632
Report generated 12/01/2006 16:01

KEMRON Environmental Services

ALTERNATE SOURCE CALIBRATION REPORT

00095840

Login Number: L0611537 Run Date: 11/04/2006 Sample ID: WG226781-11
Instrument ID: HPMS8 Run Time: 13:11 Method: 8260B
File ID: 8M331761 Analyst: MES
ICal Workgroup: WG226781 Cal ID: HPMS8 - 03-NOV-06

Analyte		Expected	Found	Units	RF	%D	UCL	Q
1,1-Dichloropropene		20.0	21.4	ug/L	0.497	7.00	30	
2-Hexanone		20.0	21.6	ug/L	0.155	8.10	30	
Hexachlorobutadiene		20.0	20.8	ug/L	0.461	4.10	30	
Isopropylbenzene		20.0	20.1	ug/L	1.95	0.400	30	
p-Isopropyltoluene		20.0	20.8	ug/L	3.03	3.80	30	
4-Methyl-2-Pentanone		20.0	22.4	ug/L	0.0666	12.0	30	
Methylene Chloride		20.0	19.1	ug/L	0.324	4.60	30	
Naphthalene		20.0	21.3	ug/L	2.13	6.40	30	
n-Propylbenzene		20.0	21.4	ug/L	4.30	7.10	30	
Styrene		20.0	22.5	ug/L	1.39	12.4	30	
1,1,1,2-Tetrachloroethane		20.0	21.6	ug/L	0.453	7.90	30	
Tetrachloroethene		20.0	21.2	ug/L	0.386	6.20	30	
1,2,3-Trichlorobenzene		20.0	19.6	ug/L	0.995	1.80	30	
1,2,4-Trichlorobenzene		20.0	19.9	ug/L	1.16	0.300	30	
1,1,1-Trichloroethane		20.0	21.5	ug/L	0.652	7.30	30	
1,1,2-Trichloroethane		20.0	22.5	ug/L	0.305	12.4	30	
Trichloroethene		20.0	21.0	ug/L	0.344	5.00	30	
Trichlorofluoromethane		20.0	18.0	ug/L	0.596	10.2	30	
1,2,3-Trichloropropane		20.0	21.5	ug/L	0.199	7.30	30	
1,2,4-Trimethylbenzene		20.0	21.1	ug/L	3.34	5.70	30	
1,3,5-Trimethylbenzene		20.0	21.6	ug/L	3.23	8.00	30	
Vinyl Acetate		20.0	8.88	ug/L	0.165	55.6	40	*
o-Xylene		20.0	21.4	ug/L	0.828	7.00	30	
m-,p-Xylene		40.0	42.7	ug/L	0.840	6.80	30	

* Exceeds %D Limit

CCC Calibration Check Compounds
SPCC System Performance Check Compounds

KEMRON FORMS - Modified 11/21/2006
Version 1.5 PDF File ID: 637632
Report generated 12/01/2006 16:01

KEMRON Environmental Services

CONTINUING CALIBRATION VERIFICATION (CCV)

00095841

Login Number: L0611537 Run Date: 11/29/2006 Sample ID: WG228431-02
Instrument ID: HPMS6 Run Time: 08:33 Method: 8260B
File ID: 6M62271 Analyst: CMS
Workgroup (AAB#): WG228433 Cal ID: HPMS6 - 20-NOV-06

Analyte		Expected	Found	RF	%D	UNITS	Q
Chloroform	CCC	50.0	47.0	0.463	6.00	ug/L	
1,1-Dichloroethene	CCC	50.0	49.4	0.365	1.10	ug/L	
1,2-Dichloropropane	CCC	50.0	49.1	0.216	1.80	ug/L	
Ethylbenzene	CCC	50.0	50.6	0.516	1.20	ug/L	
Toluene	CCC	50.0	49.5	1.35	1.10	ug/L	
Vinyl Chloride	CCC	50.0	53.2	0.184	6.40	ug/L	
Bromoform	SPCC	50.0	50.5	0.197	1.00	ug/L	
Chlorobenzene	SPCC	50.0	49.5	0.938	1.00	ug/L	
Chloromethane	SPCC	50.0	42.2	0.210	15.5	ug/L	
1,1-Dichloroethane	SPCC	50.0	49.5	0.427	1.10	ug/L	
1,1,2,2-Tetrachloroethane	SPCC	50.0	47.7	0.371	4.50	ug/L	
Acetone		50.0	52.0	0.0365	4.10	ug/L	
Benzene		50.0	49.7	0.931	0.600	ug/L	
Bromobenzene		50.0	49.2	0.726	1.60	ug/L	
Bromochloromethane		50.0	49.7	0.156	0.500	ug/L	
Bromodichloromethane		50.0	47.6	0.328	4.90	ug/L	
Bromomethane		50.0	41.4	0.143	17.2	ug/L	
2-Butanone		50.0	49.1	0.0470	1.80	ug/L	
n-Butylbenzene		50.0	51.9	2.41	3.70	ug/L	
sec-Butylbenzene		50.0	51.8	2.99	3.60	ug/L	
tert-Butylbenzene		50.0	53.1	0.548	6.30	ug/L	
Carbon Disulfide		50.0	56.0	0.740	12.1	ug/L	
Carbon Tetrachloride		50.0	50.8	0.411	1.60	ug/L	
Dibromochloromethane		50.0	49.2	0.295	1.70	ug/L	
Chloroethane		50.0	50.7	0.170	1.30	ug/L	
2-Chloroethyl Vinyl Ether		50.0	47.1	0.0805	5.70	ug/L	
2-Chlorotoluene		50.0	49.1	2.03	1.90	ug/L	
4-Chlorotoluene		50.0	48.2	2.01	3.50	ug/L	
1,2-Dibromo-3-Chloropropane		50.0	48.2	0.0750	3.70	ug/L	
1,2-Dibromoethane		50.0	47.5	0.220	5.00	ug/L	
Dibromomethane		50.0	46.6	0.118	6.80	ug/L	
1,2-Dichlorobenzene		50.0	49.0	1.28	2.00	ug/L	
1,3-Dichlorobenzene		50.0	49.9	1.45	0.300	ug/L	
1,4-Dichlorobenzene		50.0	48.8	1.47	2.50	ug/L	
Dichlorodifluoromethane		50.0	41.7	0.302	16.7	ug/L	
1,2-Dichloroethane		50.0	43.5	0.294	12.9	ug/L	
cis-1,2-Dichloroethene		50.0	50.0	0.268	0	ug/L	
trans-1,2-Dichloroethene		50.0	51.1	0.258	2.10	ug/L	
1,3-Dichloropropane		50.0	46.5	0.362	6.90	ug/L	
2,2-Dichloropropane		50.0	52.0	0.438	4.00	ug/L	
cis-1,3-Dichloropropene		50.0	49.8	0.380	0.400	ug/L	
trans-1,3-Dichloropropene		50.0	49.0	0.431	2.00	ug/L	

KEMRON FORMS - Modified 09/06/2006
Version 1.3 PDF File ID: 637635
Report generated 12/01/2006 16:01

KEMRON Environmental Services

CONTINUING CALIBRATION VERIFICATION (CCV)

00095842

Login Number: L0611537 Run Date: 11/29/2006 Sample ID: WG228431-02
Instrument ID: HPMS6 Run Time: 08:33 Method: 8260B
File ID: 6M62271 Analyst: CMS
Workgroup (AAB#): WG228433 Cal ID: HPMS6 - 20-NOV-06

Analyte		Expected	Found	RF	%D	UNITS	Q
1,1-Dichloropropene		50.0	49.6	0.358	0.800	ug/L	
2-Hexanone		50.0	45.9	0.0900	8.30	ug/L	
Hexachlorobutadiene		50.0	55.7	0.515	11.5	ug/L	
Isopropylbenzene		50.0	50.4	1.62	0.800	ug/L	
p-Isopropyltoluene		50.0	52.2	2.67	4.30	ug/L	
4-Methyl-2-Pentanone		50.0	51.0	0.0455	2.00	ug/L	
Methylene Chloride		50.0	45.9	0.237	8.10	ug/L	
Naphthalene		50.0	49.3	1.53	1.40	ug/L	
n-Propylbenzene		50.0	50.7	3.24	1.30	ug/L	
Styrene		50.0	51.2	1.05	2.40	ug/L	
1,1,1,2-Tetrachloroethane		50.0	49.7	0.362	0.700	ug/L	
Tetrachloroethene		50.0	49.9	0.394	0.200	ug/L	
1,2,3-Trichlorobenzene		50.0	49.1	0.820	1.70	ug/L	
1,2,4-Trichlorobenzene		50.0	50.0	0.990	0.100	ug/L	
1,1,1-Trichloroethane		50.0	48.8	0.450	2.40	ug/L	
1,1,2-Trichloroethane		50.0	47.0	0.203	5.90	ug/L	
Trichloroethene		50.0	51.4	0.286	2.90	ug/L	
Trichlorofluoromethane		50.0	46.4	0.496	7.30	ug/L	
1,2,3-Trichloropropane		50.0	47.8	0.301	4.40	ug/L	
1,2,4-Trimethylbenzene		50.0	49.0	2.48	1.90	ug/L	
1,3,5-Trimethylbenzene		50.0	50.5	2.39	1.00	ug/L	
Vinyl Acetate		50.0	33.1	0.190	33.8	ug/L	
o-Xylene		50.0	49.8	0.610	0.400	ug/L	
m-,p-Xylene		100	101	0.638	0.700	ug/L	
Xylenes		150	151	0.624	0.300	ug/L	

* Exceeds %D Criteria

CCC Calibration Check Compounds
SPCC System Performance Check Compounds

KEMRON FORMS - Modified 09/06/2006
Version 1.3 PDF File ID: 637635
Report generated 12/01/2006 16:01

KEMRON Environmental Services

CONTINUING CALIBRATION VERIFICATION (CCV)

00095843

Login Number: L0611537 Run Date: 11/28/2006 Sample ID: WG228325-02
Instrument ID: HPMS8 Run Time: 06:56 Method: 8260B
File ID: 8M332368 Analyst: CMS
Workgroup (AAB#): WG228326 Cal ID: HPMS8 - 03-NOV-06

Analyte		Expected	Found	RF	%D	UNITS	Q
Chloroform	CCC	50.0	54.4	0.706	8.80	ug/L	
1,1-Dichloroethene	CCC	50.0	59.5	0.616	19.0	ug/L	
1,2-Dichloropropane	CCC	50.0	50.7	0.293	1.40	ug/L	
Ethylbenzene	CCC	50.0	51.6	0.665	3.20	ug/L	
Toluene	CCC	50.0	51.9	1.76	3.70	ug/L	
Vinyl Chloride	CCC	50.0	56.3	0.354	12.6	ug/L	
Bromoform	SPCC	50.0	53.6	0.248	7.20	ug/L	
Chlorobenzene	SPCC	50.0	51.5	1.18	3.00	ug/L	
Chloromethane	SPCC	50.0	57.5	0.394	15.0	ug/L	
1,1-Dichloroethane	SPCC	50.0	53.3	0.626	6.70	ug/L	
1,1,2,2-Tetrachloroethane	SPCC	50.0	43.3	0.468	13.4	ug/L	
Acetone		50.0	53.3	0.0537	6.70	ug/L	
Benzene		50.0	51.3	1.27	2.50	ug/L	
Bromobenzene		50.0	49.4	0.856	1.20	ug/L	
Bromochloromethane		50.0	50.5	0.186	1.00	ug/L	
Bromodichloromethane		50.0	56.5	0.511	13.1	ug/L	
Bromomethane		50.0	52.7	0.198	5.50	ug/L	
2-Butanone		50.0	48.9	0.0632	2.20	ug/L	
n-Butylbenzene		50.0	51.4	2.75	2.80	ug/L	
sec-Butylbenzene		50.0	51.2	3.42	2.30	ug/L	
tert-Butylbenzene		50.0	49.9	0.584	0.200	ug/L	
Carbon Disulfide		50.0	53.5	0.958	6.90	ug/L	
Carbon Tetrachloride		50.0	60.5	0.617	21.1	ug/L	
Dibromochloromethane		50.0	54.2	0.380	8.30	ug/L	
Chloroethane		50.0	51.5	0.236	3.00	ug/L	
2-Chloroethyl Vinyl Ether		50.0	44.6	0.107	10.8	ug/L	
2-Chlorotoluene		50.0	48.7	2.69	2.60	ug/L	
4-Chlorotoluene		50.0	49.4	2.69	1.20	ug/L	
1,2-Dibromo-3-Chloropropane		50.0	46.0	0.106	7.90	ug/L	
1,2-Dibromoethane		50.0	49.7	0.274	0.600	ug/L	
Dibromomethane		50.0	52.9	0.161	5.80	ug/L	
1,2-Dichlorobenzene		50.0	46.7	1.49	6.60	ug/L	
1,3-Dichlorobenzene		50.0	49.4	1.71	1.20	ug/L	
1,4-Dichlorobenzene		50.0	47.1	1.73	5.90	ug/L	
Dichlorodifluoromethane		50.0	51.8	0.525	3.60	ug/L	
1,2-Dichloroethane		50.0	55.7	0.511	11.4	ug/L	
cis-1,2-Dichloroethene		50.0	58.7	0.595	17.5	ug/L	
trans-1,2-Dichloroethene		50.0	55.0	0.526	10.1	ug/L	
1,3-Dichloropropane		50.0	48.5	0.486	2.90	ug/L	
2,2-Dichloropropane		50.0	64.3	0.691	28.6	ug/L	
cis-1,3-Dichloropropene		50.0	53.5	0.529	7.00	ug/L	
trans-1,3-Dichloropropene		50.0	52.2	0.613	4.40	ug/L	

KEMRON FORMS - Modified 09/06/2006
Version 1.3 PDF File ID: 637635
Report generated 12/01/2006 16:01

KEMRON Environmental Services

CONTINUING CALIBRATION VERIFICATION (CCV)

00095844

Login Number: L0611537 Run Date: 11/28/2006 Sample ID: WG228325-02
Instrument ID: HPMS8 Run Time: 06:56 Method: 8260B
File ID: 8M332368 Analyst: CMS
Workgroup (AAB#): WG228326 Cal ID: HPMS8 - 03-NOV-06

Analyte		Expected	Found	RF	%D	UNITS	Q
1,1-Dichloropropene		50.0	56.1	0.521	12.1	ug/L	
2-Hexanone		50.0	45.2	0.129	9.60	ug/L	
Hexachlorobutadiene		50.0	51.1	0.453	2.20	ug/L	
Isopropylbenzene		50.0	54.3	2.11	8.50	ug/L	
p-Isopropyltoluene		50.0	52.1	3.04	4.20	ug/L	
4-Methyl-2-Pentanone		50.0	47.6	0.0566	4.80	ug/L	
Methylene Chloride		50.0	47.6	0.323	4.90	ug/L	
Naphthalene		50.0	42.1	1.69	15.9	ug/L	
n-Propylbenzene		50.0	51.9	4.16	3.70	ug/L	
Styrene		50.0	54.4	1.35	8.80	ug/L	
1,1,1,2-Tetrachloroethane		50.0	53.7	0.452	7.50	ug/L	
Tetrachloroethene		50.0	54.5	0.396	9.00	ug/L	
1,2,3-Trichlorobenzene		50.0	42.1	0.852	15.9	ug/L	
1,2,4-Trichlorobenzene		50.0	45.4	1.06	9.20	ug/L	
1,1,1-Trichloroethane		50.0	59.7	0.726	19.5	ug/L	
1,1,2-Trichloroethane		50.0	48.8	0.265	2.50	ug/L	
Trichloroethene		50.0	53.3	0.349	6.70	ug/L	
Trichlorofluoromethane		50.0	60.2	0.800	20.5	ug/L	
1,2,3-Trichloropropane		50.0	46.1	0.171	7.90	ug/L	
1,2,4-Trimethylbenzene		50.0	51.5	3.25	3.00	ug/L	
1,3,5-Trimethylbenzene		50.0	52.5	3.14	5.10	ug/L	
Vinyl Acetate		50.0	39.9	0.296	20.1	ug/L	
o-Xylene		50.0	51.9	0.802	3.70	ug/L	
m-,p-Xylene		100	106	0.830	5.50	ug/L	
Xylenes		150	157	0.816	4.90	ug/L	

* Exceeds %D Criteria

CCC Calibration Check Compounds
SPCC System Performance Check Compounds

KEMRON FORMS - Modified 09/06/2006
Version 1.3 PDF File ID: 637635
Report generated 12/01/2006 16:01

KEMRON Environmental Services

CONTINUING CALIBRATION VERIFICATION (CCV)

00095845

Login Number: L0611537 Run Date: 11/29/2006 Sample ID: WG228429-02
Instrument ID: HPMS8 Run Time: 08:15 Method: 8260B
File ID: 8M332394 Analyst: CMS
Workgroup (AAB#): WG228430 Cal ID: HPMS8 - 03-NOV-06

Analyte		Expected	Found	RF	%D	UNITS	Q
Chloroform	CCC	50.0	49.3	0.640	1.40	ug/L	
1,1-Dichloroethene	CCC	50.0	53.4	0.553	6.70	ug/L	
1,2-Dichloropropane	CCC	50.0	45.2	0.261	9.60	ug/L	
Ethylbenzene	CCC	50.0	48.2	0.621	3.60	ug/L	
Toluene	CCC	50.0	48.4	1.64	3.30	ug/L	
Vinyl Chloride	CCC	50.0	49.1	0.309	1.90	ug/L	
Bromoform	SPCC	50.0	48.3	0.223	3.40	ug/L	
Chlorobenzene	SPCC	50.0	48.2	1.11	3.60	ug/L	
Chloromethane	SPCC	50.0	50.9	0.349	1.80	ug/L	
1,1-Dichloroethane	SPCC	50.0	48.6	0.571	2.70	ug/L	
1,1,2,2-Tetrachloroethane	SPCC	50.0	39.9	0.431	20.2	ug/L	
Acetone		50.0	47.0	0.0474	6.00	ug/L	
Benzene		50.0	46.2	1.14	7.60	ug/L	
Bromobenzene		50.0	46.6	0.808	6.70	ug/L	
Bromochloromethane		50.0	45.1	0.166	9.90	ug/L	
Bromodichloromethane		50.0	50.7	0.458	1.30	ug/L	
Bromomethane		50.0	47.3	0.178	5.40	ug/L	
2-Butanone		50.0	42.9	0.0555	14.2	ug/L	
n-Butylbenzene		50.0	48.4	2.59	3.30	ug/L	
sec-Butylbenzene		50.0	48.4	3.24	3.30	ug/L	
tert-Butylbenzene		50.0	47.7	0.557	4.70	ug/L	
Carbon Disulfide		50.0	48.6	0.871	2.90	ug/L	
Carbon Tetrachloride		50.0	56.0	0.570	11.9	ug/L	
Dibromochloromethane		50.0	50.4	0.353	0.700	ug/L	
Chloroethane		50.0	43.6	0.199	12.9	ug/L	
2-Chloroethyl Vinyl Ether		50.0	38.1	0.0899	23.8	ug/L	
2-Chlorotoluene		50.0	47.2	2.61	5.50	ug/L	
4-Chlorotoluene		50.0	50.8	2.76	1.60	ug/L	
1,2-Dibromo-3-Chloropropane		50.0	42.3	0.0970	15.5	ug/L	
1,2-Dibromoethane		50.0	45.2	0.250	9.60	ug/L	
Dibromomethane		50.0	47.1	0.143	5.80	ug/L	
1,2-Dichlorobenzene		50.0	44.0	1.40	12.1	ug/L	
1,3-Dichlorobenzene		50.0	46.9	1.62	6.20	ug/L	
1,4-Dichlorobenzene		50.0	44.6	1.64	10.8	ug/L	
Dichlorodifluoromethane		50.0	43.5	0.441	13.0	ug/L	
1,2-Dichloroethane		50.0	50.2	0.460	0.300	ug/L	
cis-1,2-Dichloroethene		50.0	47.3	0.479	5.40	ug/L	
trans-1,2-Dichloroethene		50.0	49.9	0.477	0.100	ug/L	
1,3-Dichloropropane		50.0	43.9	0.440	12.1	ug/L	
2,2-Dichloropropane		50.0	58.7	0.631	17.5	ug/L	
cis-1,3-Dichloropropene		50.0	48.3	0.478	3.40	ug/L	
trans-1,3-Dichloropropene		50.0	48.5	0.570	2.90	ug/L	

KEMRON FORMS - Modified 09/06/2006
Version 1.3 PDF File ID: 637635
Report generated 12/01/2006 16:01

KEMRON Environmental Services

CONTINUING CALIBRATION VERIFICATION (CCV)

00095846

Login Number: L0611537 Run Date: 11/29/2006 Sample ID: WG228429-02
Instrument ID: HPMS8 Run Time: 08:15 Method: 8260B
File ID: 8M332394 Analyst: CMS
Workgroup (AAB#): WG228430 Cal ID: HPMS8 - 03-NOV-06

Analyte		Expected	Found	RF	%D	UNITS	Q
1,1-Dichloropropene		50.0	50.7	0.471	1.50	ug/L	
2-Hexanone		50.0	39.5	0.113	20.9	ug/L	
Hexachlorobutadiene		50.0	48.7	0.431	2.70	ug/L	
Isopropylbenzene		50.0	50.2	1.95	0.500	ug/L	
p-Isopropyltoluene		50.0	49.7	2.89	0.700	ug/L	
4-Methyl-2-Pentanone		50.0	40.4	0.0480	19.2	ug/L	
Methylene Chloride		50.0	42.6	0.289	14.9	ug/L	
Naphthalene		50.0	38.1	1.53	23.8	ug/L	
n-Propylbenzene		50.0	49.8	4.00	0.300	ug/L	
Styrene		50.0	50.0	1.24	0	ug/L	
1,1,1,2-Tetrachloroethane		50.0	50.3	0.423	0.600	ug/L	
Tetrachloroethene		50.0	50.7	0.368	1.40	ug/L	
1,2,3-Trichlorobenzene		50.0	38.3	0.776	23.3	ug/L	
1,2,4-Trichlorobenzene		50.0	41.9	0.978	16.2	ug/L	
1,1,1-Trichloroethane		50.0	54.3	0.661	8.70	ug/L	
1,1,2-Trichloroethane		50.0	43.9	0.238	12.2	ug/L	
Trichloroethene		50.0	48.7	0.319	2.60	ug/L	
Trichlorofluoromethane		50.0	52.2	0.693	4.30	ug/L	
1,2,3-Trichloropropane		50.0	42.1	0.156	15.8	ug/L	
1,2,4-Trimethylbenzene		50.0	49.2	3.10	1.70	ug/L	
1,3,5-Trimethylbenzene		50.0	50.3	3.01	0.700	ug/L	
Vinyl Acetate		50.0	31.8	0.236	36.4	ug/L	
o-Xylene		50.0	48.5	0.749	3.10	ug/L	
m-,p-Xylene		100	98.0	0.771	2.00	ug/L	
Xylenes		150	146	0.760	2.40	ug/L	

* Exceeds %D Criteria

CCC Calibration Check Compounds
SPCC System Performance Check Compounds

KEMRON FORMS - Modified 09/06/2006
Version 1.3 PDF File ID: 637635
Report generated 12/01/2006 16:01

KEMRON ENVIRONMENTAL SERVICES
INTERNAL STANDARD AREA SUMMARY
(COMPARED TO CCV)

00095847

Login Number:L0611537
Instrument ID:HPMS8
Workgroup (AAB#):WG228326

CCV Number:WG228325-02
CAL ID: HPMS8-03-NOV-06
Matrix:WATER

Sample Number	Dilution	Tag	IS-1	IS-2	IS-3
WG228325-02	NA	NA	204453	333139	414484
Upper Limit	NA	NA	408906	666278	828968
Lower Limit	NA	NA	102227	166570	207242
L0611537-01	1.00	01	173128	288548	361783
L0611537-03	1.00	01	168049	278339	348292
L0611537-06	1.00	01	172835	284397	357466
L0611537-07	1.00	01	179669	294414	372357
L0611537-08	1.00	01	186672	301343	365885
L0611537-09	1.00	01	191476	308820	373723
L0611537-10	1.00	01	173627	285469	357008
WG228326-01	1.00	01	176345	294440	364975
WG228326-02	1.00	01	187084	305548	372335

IS-1 - 1,4-Dichlorobenzene-d4
IS-2 - Chlorobenzene-d5
IS-3 - Fluorobenzene

Underline = Response outside limits

KEMRON FORMS - Modified 04/18/2006
Version 1.3 PDF File ID: 637636
Report generated 12/01/2006 16:01

KEMRON ENVIRONMENTAL SERVICES
INTERNAL STANDARD AREA SUMMARY
(COMPARED TO CCV)

00095848

Login Number:L0611537
Instrument ID:HPMS6
Workgroup (AAB#):WG228433

CCV Number:WG228431-02
CAL ID: HPMS6-20-NOV-06
Matrix:WATER

Sample Number	Dilution	Tag	IS-1	IS-2	IS-3
WG228431-02	NA	NA	371739	618690	793421
Upper Limit	NA	NA	743478	1237380	1586842
Lower Limit	NA	NA	185870	309345	396711
L0611537-04	1.00	02	303370	517023	663345
L0611537-05	1.00	02	297808	514961	655904
WG228433-01	1.00	01	343241	589146	758362
WG228433-02	1.00	01	350052	585467	742043
WG228433-03	1.00	01	348186	578362	743056

IS-1 - 1,4-Dichlorobenzene-d4
IS-2 - Chlorobenzene-d5
IS-3 - Fluorobenzene

Underline = Response outside limits

KEMRON FORMS - Modified 04/18/2006
Version 1.3 PDF File ID: 637636
Report generated 12/01/2006 16:01

KEMRON ENVIRONMENTAL SERVICES
INTERNAL STANDARD AREA SUMMARY
(COMPARED TO CCV)

00095849

Login Number:L0611537
Instrument ID:HPMS8
Workgroup (AAB#):WG228430

CCV Number:WG228649-01
CAL ID: HPMS8-03-NOV-06
Matrix:WATER

Sample Number	Dilution	Tag	IS-1	IS-2	IS-3
WG228649-01	NA	NA	171794	290486	375376
Upper Limit	NA	NA	343588	580972	750752
Lower Limit	NA	NA	85897	145243	187688
L0611537-01	20.0	DL01	164613	276436	353219
L0611537-02	1.00	02	157278	261867	341830
WG228430-01	1.00	01	163809	272530	352515
WG228430-02	1.00	01	173909	286678	359724
WG228430-06	1.00	01	164683	275501	356265

IS-1 - 1,4-Dichlorobenzene-d4
IS-2 - Chlorobenzene-d5
IS-3 - Fluorobenzene

Underline = Response outside limits

KEMRON FORMS - Modified 04/18/2006
Version 1.3 PDF File ID: 637636
Report generated 12/01/2006 16:01

KEMRON ENVIRONMENTAL SERVICES
INTERNAL STANDARD RETENTION TIME SUMMARY
(COMPARED TO CCV)

00095850

Login Number:L0611537
Instrument ID:HPMS8
Workgroup (AAB#):WG228326

CCV Number:WG228325-02
CAL ID: HPMS8-03-NOV-06
Matrix:WATER

Sample Number	Dilution	Tag	IS-1	IS-2	IS-3
WG228325-02	NA	NA	17.99	14.97	11.09
Upper Limit	NA	NA	18.49	15.47	11.59
Lower Limit	NA	NA	17.49	14.47	10.59
L0611537-01	1.00	01	17.99	14.97	11.1
L0611537-03	1.00	01	17.99	14.97	11.09
L0611537-06	1.00	01	17.99	14.97	11.1
L0611537-07	1.00	01	17.99	14.97	11.09
L0611537-08	1.00	01	17.99	14.97	11.09
L0611537-09	1.00	01	18	14.97	11.09
L0611537-10	1.00	01	17.99	14.97	11.09
WG228326-01	1.00	01	17.99	14.97	11.09
WG228326-02	1.00	01	17.99	14.97	11.1

IS-1 - 1,4-Dichlorobenzene-d4
IS-2 - Chlorobenzene-d5
IS-3 - Fluorobenzene

Underline = Response outside limits

KEMRON FORMS - Modified 04/18/2006
Version 1.3 PDF File ID: 637638
Report generated 12/01/2006 16:01

KEMRON ENVIRONMENTAL SERVICES
INTERNAL STANDARD RETENTION TIME SUMMARY
(COMPARED TO CCV)

Login Number: L0611537
Instrument ID: HPMS6
Workgroup (AAB#): WG228433

CCV Number: WG228431-02
CAL ID: HPMS6-20-NOV-06
Matrix: WATER

Sample Number	Dilution	Tag	IS-1	IS-2	IS-3
WG228431-02	NA	NA	19.52	15.95	11.45
Upper Limit	NA	NA	20.02	16.45	11.95
Lower Limit	NA	NA	19.02	15.45	10.95
L0611537-04	1.00	02	19.52	15.95	11.45
L0611537-05	1.00	02	19.51	15.95	11.45
WG228433-01	1.00	01	19.51	15.95	11.45
WG228433-02	1.00	01	19.51	15.95	11.45
WG228433-03	1.00	01	19.52	15.95	11.45

IS-1 - 1,4-Dichlorobenzene-d4
IS-2 - Chlorobenzene-d5
IS-3 - Fluorobenzene

Underline = Response outside limits

KEMRON FORMS - Modified 04/18/2006
Version 1.3 PDF File ID: 637638
Report generated 12/01/2006 16:01

KEMRON ENVIRONMENTAL SERVICES
INTERNAL STANDARD RETENTION TIME SUMMARY
(COMPARED TO CCV)

00095852

Login Number:L0611537
Instrument ID:HPMS8
Workgroup (AAB#):WG228430

CCV Number:WG228649-01
CAL ID: HPMS8-03-NOV-06
Matrix:WATER

Sample Number	Dilution	Tag	IS-1	IS-2	IS-3
WG228649-01	NA	NA	17.99	14.97	11.09
Upper Limit	NA	NA	18.49	15.47	11.59
Lower Limit	NA	NA	17.49	14.47	10.59
L0611537-01	20.0	DL01	17.99	14.97	11.09
L0611537-02	1.00	02	17.99	14.97	11.09
WG228430-01	1.00	01	17.99	14.97	11.09
WG228430-02	1.00	01	17.99	14.97	11.1
WG228430-06	1.00	01	17.99	14.97	11.09

IS-1 - 1,4-Dichlorobenzene-d4
IS-2 - Chlorobenzene-d5
IS-3 - Fluorobenzene

Underline = Response outside limits

KEMRON FORMS - Modified 04/18/2006
Version 1.3 PDF File ID: 637638
Report generated 12/01/2006 16:01

00095853

COC No. A 66599

156 Starlite Drive
Marietta, OH 45750

KEMRON
ENVIRONMENTAL SERVICES

CHAIN-OF-CUSTODY RECORD

Phone: 740-373-4071
Fax: 740-373-4835

Company Name: Shaw E&I

Project Contact: Allen Willmore

Contact Phone #: (713) 996-4586 (713) 345-9212

Turn Around Requirements: 48-hour

Location: Karnack, Tx

Project #: 117591.0006A100

Project Name: Longhorn AAD

Sampler (print): Allen Willmore

Signature:

Program: ☐ NPDES ☐ AFCEE ☐ RCRA ☐ USAGE ☐ Other

Sample I.D. No.	Comp*	Grab	Date	Time	Protocol CWA	Protocol SW846	NUMBER OF CONTAINERS	Hold	VOCs 8260	ADDITIONAL REQUIREMENTS
29WW35-2nd		X	11/20/06	15:35			3		✓	
29WW36-2nd		X	11/17/06	11:50			3		✓	
29WW37-2nd		X	11/17/06	10:50			3		✓	
29WW38-2nd		X	11/20/06	14:25			3		✓	
29WW39-2nd		X	11/20/06	13:40			3		✓	
29WW40-2nd		X	11/21/06	0950			3		✓	
29WW40-2nd Dup		X	11/21/06	0950			3		✓	
29WW40-2nd MS		X	11/21/06	0950			3		✓	
29WW40-2nd MSD		X	11/21/06	0950			3		✓	
TRIP BLANK							3		✓	

Relinquished by: (Signature)	Date	Time	Received by: (Signature)	Relinquished by: (Signature)	Date	Time	Received by: (Signature)
	11/21/06	17:30					

Relinquished by: (Signature)	Date	Time	Received for Laboratory by: (Signature)	Date	Time	Cooler Temp in °C	Remarks
			Brenda Gregory	11/22/06	0930	6	QC sealed Sip intact Bag

*Homogenize all composite samples prior to analysis

B4163 00095854

SAMPLE RECEIPT FORM

156 STARLITE DRIVE
MARIETTA, OH
45750
(740) 373-4071

Date: 11-22-06 Client: Shaw E&I

Shipped By: ( ) Fed-Ex (✓) UPS ( )DHL ( ) KEMRON ( ) Client ( ) Other

Opened By: JRA

Logged By: BLG Login # L06 11537

IR Temp Gun: ( ) D (✓) G

COOLER INFORMATION

Number	Cooler ID	Temp °C	Airbill#	COC#	Other
1	0467	6	12 66V 725 01916793 50		
2					
3					
4					
5					
6					

Were all coolers sealed?	(Y)	N	N/A
Were custody seals used on all coolers?	(Y)	N	N/A
Were custody seals intact?	(Y)	N	N/A
Was visible ice present?	(Y)	N	N/A
Were all coolers in the temperature range of 2-6C? (>6C*)	(Y)	N	N/A
Were the samples frozen?*	Y	(N)	N/A
Were COC papers provided?	(Y)	N	N/A
Were all sample containers intact?*	(Y)	N	N/A
Were all sample labels intact?	(Y)	N	N/A
Were all sample labels legible?*	(Y)	N	N/A
Did all sample labels match the COC?*	(Y)	N	N/A
Was the label information complete?*	(Y)	N	N/A
Were the correct containers used?*	(Y)	N	N/A
Were the correct preservatives added to water samples?*	(Y)	N	N/A
Was the pH tested on preserved water samples?	Y	N	(N/A)
Were pH ranges acceptable?*	Y	N	(N/A)
Was sufficient amount of sample provided?*	(Y)	N	N/A
Were bubbles present in VOA samples?*	Y	(N)	N/A
Were COC's signed and dated?	(Y)	N	N/A
Did samples arrive before hold time expired?*	(Y)	N	N/A
Are discrepancy forms attached?	Y	N	(N/A)

**Requires a discrepancy form*

Comments:_____

CRF #1
Revised 8/22/03

KEMRON Environmental Services
Internal Chain of Custody Report

00095855

Login: L0611537
Account: 2773
Project: 2773.025
Samples: 10
Due Date: 28-NOV-2006

Samplenum	Container ID	Products
L0611537-03	300502	826-LOW

Bottle: 1

Seq.	Purpose	From	To	Date/Time	Accept	Relinquish
1	LOGIN			22-NOV-2006 09:59	BRG	
2	ANALYZ	L1	ORG4	22-NOV-2006 10:05	MES	BRG

Bottle: 2

Seq.	Purpose	From	To	Date/Time	Accept	Relinquish
1	LOGIN			22-NOV-2006 09:59	BRG	
2	ANALYZ	L1	ORG4	22-NOV-2006 10:05	MES	BRG

Bottle: 3

Seq.	Purpose	From	To	Date/Time	Accept	Relinquish
1	LOGIN			22-NOV-2006 09:59	BRG	
2	ANALYZ	L1	ORG4	22-NOV-2006 10:05	MES	BRG

Samplenum	Container ID	Products
L0611537-07	300506	826-LOW

Bottle: 1

Seq.	Purpose	From	To	Date/Time	Accept	Relinquish
1	LOGIN			22-NOV-2006 09:59	BRG	
2	ANALYZ	L1	ORG4	22-NOV-2006 10:06	MES	BRG

Bottle: 2

Seq.	Purpose	From	To	Date/Time	Accept	Relinquish
1	LOGIN			22-NOV-2006 09:59	BRG	
2	ANALYZ	L1	ORG4	22-NOV-2006 10:06	MES	BRG

Bottle: 3

Seq.	Purpose	From	To	Date/Time	Accept	Relinquish
1	LOGIN			22-NOV-2006 09:59	BRG	
2	ANALYZ	L1	ORG4	22-NOV-2006 10:05	MES	BRG

KEMRON Environmental Services
Internal Chain of Custody Report

00095856

Login: L0611537
Account: 2773
Project: 2773.025
Samples: 10
Due Date: 28-NOV-2006

Samplenum	Container ID	Products
L0611537-02	300501	826-LOW

Bottle: 1

Seq.	Purpose	From	To	Date/Time	Accept	Relinquish
1	LOGIN			22-NOV-2006 09:59	BRG	
2	ANALYZ	L1	ORG4	22-NOV-2006 10:05	MES	BRG

Bottle: 2

Seq.	Purpose	From	To	Date/Time	Accept	Relinquish
1	LOGIN			22-NOV-2006 09:59	BRG	
2	ANALYZ	L1	ORG4	22-NOV-2006 10:05	MES	BRG

Bottle: 3

Seq.	Purpose	From	To	Date/Time	Accept	Relinquish
1	LOGIN			22-NOV-2006 09:59	BRG	
2	ANALYZ	L1	ORG4	22-NOV-2006 10:05	MES	BRG

Samplenum	Container ID	Products
L0611537-08	300507	826-LOW

Bottle: 1

Seq.	Purpose	From	To	Date/Time	Accept	Relinquish
1	LOGIN			22-NOV-2006 09:59	BRG	
2	ANALYZ	L1	ORG4	22-NOV-2006 10:05	MES	BRG

Bottle: 2

Seq.	Purpose	From	To	Date/Time	Accept	Relinquish
1	LOGIN			22-NOV-2006 09:59	BRG	
2	ANALYZ	L1	ORG4	22-NOV-2006 10:05	MES	BRG

Bottle: 3

Seq.	Purpose	From	To	Date/Time	Accept	Relinquish
1	LOGIN			22-NOV-2006 09:59	BRG	
2	ANALYZ	L1	ORG4	22-NOV-2006 10:05	MES	BRG

KEMRON Environmental Services
Internal Chain of Custody Report

00095857

Login: L0611537
Account: 2773
Project: 2773.025
Samples: 10
Due Date: 28-NOV-2006

Samplenum	Container ID	Products
L0611537-04	300503	826-LOW

Bottle: 1

Seq.	Purpose	From	To	Date/Time	Accept	Relinquish
1	LOGIN			22-NOV-2006 09:59	BRG	
2	ANALYZ	L1	ORG4	22-NOV-2006 10:05	MES	BRG

Bottle: 2

Seq.	Purpose	From	To	Date/Time	Accept	Relinquish
1	LOGIN			22-NOV-2006 09:59	BRG	
2	ANALYZ	L1	ORG4	22-NOV-2006 10:05	MES	BRG

Bottle: 3

Seq.	Purpose	From	To	Date/Time	Accept	Relinquish
1	LOGIN			22-NOV-2006 09:59	BRG	
2	ANALYZ	L1	ORG4	22-NOV-2006 10:05	MES	BRG

Samplenum	Container ID	Products
L0611537-01	300500	826-LOW

Bottle: 1

Seq.	Purpose	From	To	Date/Time	Accept	Relinquish
1	LOGIN			22-NOV-2006 09:59	BRG	
2	ANALYZ	L1	ORG4	22-NOV-2006 10:05	MES	BRG

Bottle: 2

Seq.	Purpose	From	To	Date/Time	Accept	Relinquish
1	LOGIN			22-NOV-2006 09:59	BRG	
2	ANALYZ	L1	ORG4	22-NOV-2006 10:05	MES	BRG

Bottle: 3

Seq.	Purpose	From	To	Date/Time	Accept	Relinquish
1	LOGIN			22-NOV-2006 09:59	BRG	
2	ANALYZ	L1	ORG4	22-NOV-2006 10:05	MES	BRG

KEMRON Environmental Services
Internal Chain of Custody Report

00095858

Login: L0611537
Account: 2773
Project: 2773.025
Samples: 10
Due Date: 28-NOV-2006

Samplenum	Container ID	Products
L0611537-06	300505	826-LOW

Bottle: 1

Seq.	Purpose	From	To	Date/Time	Accept	Relinquish
1	LOGIN			22-NOV-2006 09:59	BRG	
2	ANALYZ	L1	ORG4	22-NOV-2006 10:05	MES	BRG

Bottle: 2

Seq.	Purpose	From	To	Date/Time	Accept	Relinquish
1	LOGIN			22-NOV-2006 09:59	BRG	
2	ANALYZ	L1	ORG4	22-NOV-2006 10:05	MES	BRG

Bottle: 3

Seq.	Purpose	From	To	Date/Time	Accept	Relinquish
1	LOGIN			22-NOV-2006 09:59	BRG	
2	ANALYZ	L1	ORG4	22-NOV-2006 10:05	MES	BRG

Samplenum	Container ID	Products
L0611537-05	300504	826-LOW

Bottle: 1

Seq.	Purpose	From	To	Date/Time	Accept	Relinquish
1	LOGIN			22-NOV-2006 09:59	BRG	
2	ANALYZ	L1	ORG4	22-NOV-2006 10:05	MES	BRG

Bottle: 2

Seq.	Purpose	From	To	Date/Time	Accept	Relinquish
1	LOGIN			22-NOV-2006 09:59	BRG	
2	ANALYZ	L1	ORG4	22-NOV-2006 10:05	MES	BRG

Bottle: 3

Seq.	Purpose	From	To	Date/Time	Accept	Relinquish
1	LOGIN			22-NOV-2006 09:59	BRG	
2	ANALYZ	L1	ORG4	22-NOV-2006 10:05	MES	BRG

KEMRON Environmental Services
Internal Chain of Custody Report

00095859

Login: L0611537
Account: 2773
Project: 2773.025
Samples: 10
Due Date: 28-NOV-2006

Samplenum	Container ID	Products
L0611537-10	300509	826-LOW

Bottle: 1

Seq.	Purpose	From	To	Date/Time	Accept	Relinquish
1	LOGIN			22-NOV-2006 09:59	BRG	
2	ANALYZ	L1	ORG4	22-NOV-2006 10:06	MES	BRG

Bottle: 2

Seq.	Purpose	From	To	Date/Time	Accept	Relinquish
1	LOGIN			22-NOV-2006 09:59	BRG	
2	ANALYZ	L1	ORG4	22-NOV-2006 10:06	MES	BRG

Bottle: 3

Seq.	Purpose	From	To	Date/Time	Accept	Relinquish
1	LOGIN			22-NOV-2006 09:59	BRG	
2	ANALYZ	L1	ORG4	22-NOV-2006 10:06	MES	BRG

Samplenum	Container ID	Products
L0611537-09	300508	826-LOW

Bottle: 1

Seq.	Purpose	From	To	Date/Time	Accept	Relinquish
1	LOGIN			22-NOV-2006 09:59	BRG	
2	ANALYZ	L1	ORG4	22-NOV-2006 10:06	MES	BRG

Bottle: 2

Seq.	Purpose	From	To	Date/Time	Accept	Relinquish
1	LOGIN			22-NOV-2006 09:59	BRG	
2	ANALYZ	L1	ORG4	22-NOV-2006 10:06	MES	BRG

Bottle: 3

Seq.	Purpose	From	To	Date/Time	Accept	Relinquish
1	LOGIN			22-NOV-2006 09:59	BRG	
2	ANALYZ	L1	ORG4	22-NOV-2006 10:06	MES	BRG

ENVIRONMENTAL SERVICES

00095860

156 Starlite Drive, Marietta, OH 45750 * TEL 740-373-4071 * FAX 740-373-4835 * http://www.kemron.com

Laboratory Report Number: L0612485

Please find enclosed the analytical results for the samples you submitted to KEMRON Environmental Services.

Review and compilation of your report was completed by KEMRON's Sales and Service Team. If you have questions, comments or require further assistance regarding this report, please contact our team member noted in the Reviewed box below at 800-373-4071. Team member e-mail addresses also appear here for your convenience.

Debra Elliott - Team Leader
delliott@kemron-lab.com

Amanda Fickiesen - Client Services Specialist
afickiesen@kemron-lab.com

Cheryl Koelsch - Team Chemist/Data Specialist
ckoelsch@kemron-lab.com

Annie Bock - Client Services Specialist
abock@kemron-lab.com

Stephanie Mossburg - Team Chemist/Data Specialist
smossburg@kemron-lab.com

Kathy Albertson - Team Chemist/Data Specialist
kalbertson@kemron-lab.com

This report was reviewed on 05-JAN-07.

Stephanie Mossburg

STEPHANIE MOSSBURG

I certify that all test results meet all of the requirments of the NELAP standards and other applicable contract terms and conditions. All results for soil samples are reported on a 'dry-weight' basis unless specified otherwise. Analytical results for water and wastes are reported on an 'as received' basis unless specified otherwise. A statement of uncertainty for each analysis is available upon request. This laboratory report shall not be reproduced, except in full, without the written approval of KEMRON Environmental Services.

This report was certified on 05-JAN-07.

David E. Vandenberg

DAVID VANDENBERG

FL DOH NELAP ID: E8755

This report contains a total of 192 pages.

Protecting Our Environmental Future

Laboratory Data Package Cover Page

00095861

This data Package consists of:

This signature page, the laboratory review checklists, and the following reportable data:

✓R1 Field chain-of-custody documentation;

✓R2 sample identification cross-reference;

R3 Test reports (analytical data sheets) for each enviornmental sample that includes:

a) Items consistant with NELAC 5.13 or ISO/IEC 17025 Section 5.10
b) dilution factors,
c) preparation methods,
d) Cleanup methods, and
e) If required for the project, tentatively identified compounds (TICs)

✓R4 Surrogate recovery data including:

a) Calculated recovery (%R) for each analyte, and
b) The laboratory's surrogate QC limits.

✓R5 Test reports/summary forms for blank samples;

✓R6 Test reports/summary forms for laboratory control samples (LCSs) including:

a) LCS spiking amount,
b) Calculated %R for each analyte, and
c) The laboratory"s LCS QC limits.

✓R7 Test reports for project matrix spike/matrix spike duplicates (MS/MSDs) including:

a) Samples associated with the MS/MSD clearly identified,
b) MS/MSD spiking amounts,
c) Concentration of each MS/MSD analyte measured in the parent and spiked samples,
d) Calculated %R and relative percent differences (RPDs), and
e) The laboratory's MS/MSD QC limits

✓R8 Laboratory analytical duplicate (if applicable) revocery and precision:

a) the amount of analyte measured in the duplicate,
b) the calculated RPD, and
c) the laboratory's QC limits for anlytical duplicates.

✓R9 List of method quantitation limits (MQLs) for each analyte for each method and matrix;

✓R10 Other problems or anomalies.

✓The exception Report for every "No" or "Not Reviewed (NR)" item IN laboratory review checklist.

Release statement: I am responsible for the release of this laboratory data package. This data package has been reviewed by the laboratory and is complete and technically compliant with the requirements of the methods used, except where noted by the laboratory in the attached exceptions reports. By my signature below, I affirm to the best of my knowledge, all problems/anomalies, observed by the laboratory as having the potential to affect the quality of the data, have been identified by the laboratoy in the Laboratory Review Checklist, and no information or data have been knowingly withheld that would affect the quality of the data.

Check, if applicable: [✓] This laboratory is an in-house laboratory controlled by the person repsonding to rule. The official signing the cover page of the rule-required report (for example, the APAR) in which these data are used is responsible for releasing this data package and is by signature affirming the above release statement is true.

MIKE D. ALBERTSON		Volatiles Lab Supervisor	January 2, 2007
Name (Printed)	Signature	Official Title (printed)	DATE

RG-366/TRRP-13 December 2002 A1

KEMRON Environmental Services
Laboratory Review Checklist

Laboratory Name:	KEMRON
Laboratory Log Number:	L0612485
Project Name:	798-LONGHORN
Method:	8260B
Prep Batch Number(s):	230324, 230417, 230415
Reviewer Name:	MIKE D. ALBERTSON
LRC Date:	January 02, 2007

Description	Yes	No	NA(1)	NR(2)	ER(3)
Chain-Of-Custody (C-O-C)					
Did samples meet the laboratory's standard conditions of sample acceptability upon receipt?	✓				
Were all departures from standard conditions described in an exception report?	✓				
Sample and quality control (QC) identification					
Are all field sample ID numbers cross-referenced to the laboratory ID numbers?	✓				
Are all laboratory ID numbers cross-referenced to the corresponding QC data?	✓				
Test reports					
Were all samples prepared and analyzed within holding times?	✓				
Other than those results <MQL, were all other raw values bracketed by calibration standards?	✓				
Were calculations checked by a peer or supervisor?	✓				
Were all analyte identifications checked by a peer or supervisor?	✓				
Were sample quantitation limits reported for all analytes not detected?	✓				
Were all results for soil and sediment samples reported on a dry weight basis?	✓				
Were % moisture (or solids) reported for all soil and sediment samples?	✓				
If required for the project, TICs reported?			✓		
Surrogate recovery data					
Were surrogates added prior to extraction?	✓				
Were surrogate percent recoveries in all samples within the laboratory QC limits?	✓				
Test reports/summary forms for blank samples					
Were appropriate type(s) of blanks analyzed?	✓				
Were blanks analyzed at the appropriate frequency?	✓				
Were method blanks taken through the entire analytical process, including preparation and, if applicable, cleanup procedures?	✓				
Were blank concentrations <MQL?	✓				
Laboratory control samples (LCS):					
Were all COCs included in the LCS?	✓				
Was each LCS taken through the entire analytical procedure, including prep and cleanup steps?	✓				
Were LCSs analyzed at the required frequency?	✓				
Were LCS (and LCSD, if applicable) %Rs within the laboratory QC limits?	✓				
Does the detectability data document the laboratorys capability to detect the COCs at the MDL used to calculate the SQLs?	✓				
Was the LCSD RPD within QC limits?	✓				
Matrix spike (MS) and matrix spike duplicate (MSD) data					
Were the project/method specified analytes included in the MS and MSD?			✓		
Were MS/MSD analyzed at the appropriate frequency?			✓		
Were MS (and MSD, if applicable) %Rs within the laboratory QC limits?			✓		

Description	Yes	No	NA(1)	NR(2)	ER(3)
Were MS/MSD RPDs within laboratory QC limits?			✓		
Analytical duplicate data					
Were appropriate analytical duplicates analyzed for each matrix?			✓		
Were analytical duplicates analyzed at the appropriate frequency?			✓		
Were RPDs or relative standard deviations within the laboratory QC limits?			✓		
Method quantitation limits (MQLs):					
Are the MQLs for each method analyte included in the laboratory data package?	✓				
Do the MQLs correspond to the concentration of the lowest non-zero calibration standard?	✓				
Are unadjusted MQLs included in the laboratory data package?	✓				
Other problems/anomalies					
Are all known problems/anomalies/special conditions noted in this LRC and ER?	✓				
Were all necessary corrective actions performed for the reported data?	✓				
Was applicable and available technology used to lower the SQL minimize the matrix interference affects on the sample results?	✓				
ICAL					
Were response factors and/or relative response factors for each analyte within QC limits?	✓				
Were percent RSDs or correlation coefficient criteria met?	✓				
Was the number of standards recommended in the method used for all analytes?	✓				
Were all points generated between the lowest and highest standard used to calculate the curve?	✓				
Are ICAL data available for all instruments used?	✓				
Has the initial calibration curve been verified using an appropriate second source standard?		✓			1
Initial and continuing calibration verification (ICV and CCV) and continuing calibration blank (CCB):					
Was the CCV analyzed at the method-required frequency?	✓				
Were percent differences for each analyte within the method-required QC limits?		✓			2
Was the ICAL curve verified for each analyte?	✓				
Was the absolute value of the analyte concentration in the inorganic CCB <MDL?			✓		
Mass spectral tuning:					
Was the appropriate compound for the method used for tuning?	✓				
Were ion abundance data within the method-required QC limits?	✓				
Internal standards (IS):					
Were IS area counts and retention times within the method-required QC limits?	✓				
Raw data (NELAC section 1 appendix A glossary, and section 5.12 or ISO/IEC 17025 section 4.12.2)					
Were the raw data (for example, chromatograms, spectral data) reviewed by an analyst?	✓				
Were data associated with manual integrations flagged on the raw data?	✓				
Dual column confirmation					
Did dual column confirmation results meet the method-required QC?			✓		
Tentatively identified compounds (TICs):					
If TICs were requested, were the mass spectra and TIC data subject to appropriate checks?			✓		
Interference Check Sample (ICS) results:					
Were percent recoveries within method QC limits?			✓		
Serial dilutions, post digestion spikes, and method of standard additions					
Were percent differences, recoveries, and the linearity within the QC limits specified in the method?			✓		
Method detection limit (MDL) studies					
Was a MDL study performed for each reported analyte?	✓				
Is the MDL either adjusted or supported by the analysis of DCSs?	✓				
Proficiency test reports:					
Was the laboratory's performance acceptable on the applicable proficiency tests or evaluation studies?	✓				

Description	Yes	No	NA(1)	NR(2)	ER(3)
Standards documentation					
Are all standards used in the analyses NIST-traceable or obtained from other appropriate sources?	✓				
Compound/analyte identification procedures					
Are the procedures for compound/analyte identification documented?	✓				
Demonstration of analyst competency (DOC)					
Was DOC conducted consistent with NELAC Chapter 5C or ISO/IEC 4?	✓				
Is documentation of the analyst's competency up-to-date and on file?	✓				
Verification/validation documentation for methods (NELAC Chap 5 or ISO/IEC 17025 Section 5)					
Are all the methods used to generate the data documented, verified, and validated, where applicable?	✓				
Laboratory standard operating procedures (SOPs):					
Are laboratory SOPs current and on file for each method performed?	✓				

EXCEPTIONS REPORT

ER# - Description

#1: The alternate source analyzed 11/20/06 on HPMS-6 yielded a % drift for methyl acetate above the upper control limit.

#2: The CCV analyzed 12/28/06 on HPMS-6 yielded a % drift for dichlorodifluoromethane below the lower control limit.

Footnotes:

(1) NA = Not applicable to method or project

(2) NR = Not reviewed

(3) ER# = Exception report number

Laboratory Data Package Cover Page

00095865

This data Package consists of:

This signature page, the laboratory review checklists, and the following reportable data:

R1 Field chain-of-custody documentation;

R2 sample identification cross-reference;

R3 Test reports (analytical data sheets) for each enviornmental sample that includes:

a) Items consistant with NELAC 5.13 or ISO/IEC 17025 Section 5.10

b) dilution factors,

c) preparation methods,

d) Cleanup methods, and

e) If required for the project, tentatively identified compounds (TICs)

R4 Surrogate recovery data including:

a) Calculated recovery (%R) for each analyte, and

b) The laboratory's surrogate QC limits.

✓R5 Test reports/summary forms for blank samples;

✓R6 Test reports/summary forms for laboratory control samples (LCSs) including:

a) LCS spiking amount,

b) Calculated %R for each analyte, and

c) The laboratory"s LCS QC limits.

✓R7 Test reports for project matrix spike/matrix spike duplicates (MS/MSDs) including:

a) Samples associated with the MS/MSD clearly identified,

b) MS/MSD spiking amounts,

c) Concentration of each MS/MSD analyte measured in the parent and spiked samples,

d) Calculated %R and relative percent differences (RPDs), and

e) The laboratory's MS/MSD QC limits

✓R8 Laboratory analytical duplicate (if applicable) revocery and precision:

a) the amount of analyte measured in the duplicate,

b) the calculated RPD, and

c) the laboratory's QC limits for anlytical duplicates.

R9 List of method quantitation limits (MQLs) for each analyte for each method and matrix;

R10 Other problems or anomalies.

✓The exception Report for every "No" or "Not Reviewed (NR)" item IN laboratory review checklist.

Release statement: I am responsible for the release of this laboratory data package. This data package has been reviewed by the laboratory and is complete and technically compliant with the requirements of the methods used, except where noted by the laboratory in the attached exceptions reports. By my signature below, I affirm to the best of my knowledge, all problems/anomalies, observed by the laboratory as having the potential to affect the quality of the data, have been identified by the laboratoy in the Laboratory Review Checklist, and no information or data have been knowingly withheld that would affect the quality of the data.

Check, If applicable: [] This laboratory is an in-house laboratory controlled by the person repsonding to rule. The official signing the cover page of the rule-required report (for example, the APAR) in which these data are used is responsible for releasing this data package and is by signature affirming the above release statement is trus.

MICHAEL D. COCHRAN		Semivolatiles Lab Supervisor	January 2, 2007
Name (Printed)	Signature	Official Title (printed)	DATE

RG-366/TRRP-13 December 2002 A1

KEMRON Environmental Services
Laboratory Review Checklist

Laboratory Name:	KEMRON
Laboratory Log Number:	L0612485
Project Name:	798-LONGHORN
Method:	300
Prep Batch Number(s):	WG230107
Reviewer Name:	MICHAEL D. COCHRAN
LRC Date:	December 20, 2006

Description	Yes	No	NA(1)	NR(2)	ER(3)
Chain-Of-Custody (C-O-C)					
Did samples meet the laboratory's standard conditions of sample acceptability upon receipt?	✓				
Were all departures from standard conditions described in an exception report?	✓				
Sample and quality control (QC) identification					
Are all field sample ID numbers cross-referenced to the laboratory ID numbers?	✓				
Are all laboratory ID numbers cross-referenced to the corresponding QC data?	✓				
Test reports					
Were all samples prepared and analyzed within holding times?	✓				
Other than those results <MQL, were all other raw values bracketed by calibration standards?	✓				
Were calculations checked by a peer or supervisor?	✓				
Were all analyte identifications checked by a peer or supervisor?	✓				
Were sample quantitation limits reported for all analytes not detected?	✓				
Were all results for soil and sediment samples reported on a dry weight basis?			✓		
Were % moisture (or solids) reported for all soil and sediment samples?			✓		
If required for the project, TICs reported?	✓				
Surrogate recovery data					
Were surrogates added prior to extraction?			✓		
Were surrogate percent recoveries in all samples within the laboratory QC limits?			✓		
Test reports/summary forms for blank samples					
Were appropriate type(s) of blanks analyzed?	✓				
Were blanks analyzed at the appropriate frequency?	✓				
Were method blanks taken through the entire analytical process, including preparation and, if applicable, cleanup procedures?	✓				
Were blank concentrations <MQL?	✓				
Laboratory control samples (LCS):					
Were all COCs included in the LCS?	✓				
Was each LCS taken through the entire analytical procedure, including prep and cleanup steps?	✓				
Were LCSs analyzed at the required frequency?	✓				
Were LCS (and LCSD, if applicable) %Rs within the laboratory QC limits?	✓				
Does the detectability data document the laboratorys capability to detect the COCs at the MDL used to calculate the SQLs?	✓				
Was the LCSD RPD within QC limits?			✓		
Matrix spike (MS) and matrix spike duplicate (MSD) data					
Were the project/method specified analytes included in the MS and MSD?	✓				
Were MS/MSD analyzed at the appropriate frequency?	✓				
Were MS (and MSD, if applicable) %Rs within the laboratory QC limits?	✓				1

Description	Yes	No	NA(1)	NR(2)	ER(3)
Were MS/MSD RPDs within laboratory QC limits?	✓				
Analytical duplicate data					
Were appropriate analytical duplicates analyzed for each matrix?	✓				
Were analytical duplicates analyzed at the appropriate frequency?	✓				
Were RPDs or relative standard deviations within the laboratory QC limits?	✓				
Method quantitation limits (MQLs):					
Are the MQLs for each method analyte included in the laboratory data package?	✓				
Do the MQLs correspond to the concentration of the lowest non-zero calibration standard?	✓				
Are unadjusted MQLs included in the laboratory data package?	✓				
Other problems/anomalies					
Are all known problems/anomalies/special conditions noted in this LRC and ER?	✓				2
Were all necessary corrective actions performed for the reported data?	✓				
Was applicable and available technology used to lower the SQL minimize the matrix interference affects on the sample results?	✓				
Were response factors and/or relative response factors for each analyte within QC limits?	✓				
Were percent RSDs or correlation coefficient criteria met?	✓				
Was the number of standards recommended in the method used for all analytes?	✓				
Were all points generated between the lowest and highest standard used to calculate the curve?	✓				
Are ICAL data available for all instruments used?	✓				
Has the initial calibration curve been verified using an appropriate second source standard?	✓				
Initial and continuing calibration verification (ICV and CCV) and continuing calibration blank (CCB):					
Was the CCV analyzed at the method-required frequency?	✓				
Were percent differences for each analyte within the method-required QC limits?	✓				
Was the ICAL curve verified for each analyte?	✓				
Was the absolute value of the analyte concentration in the inorganic CCB <MDL?	✓				
Mass spectral tuning:					
Was the appropriate compound for the method used for tuning?			✓		
Were ion abundance data within the method-required QC limits?			✓		
Internal standards (IS):					
Were IS area counts and retention times within the method-required QC limits?			✓		
Raw data (NELAC section 1 appendix A glossary, and section 5.12 or ISO/IEC 17025 section 4.12.2)					
Were the raw data (for example, chromatograms, spectral data) reviewed by an analyst?	✓				
Were data associated with manual integrations flagged on the raw data?	✓				
Dual column confirmation					
Did dual column confirmation results meet the method-required QC?			✓		
Tentatively identified compounds (TICs):					
If TICs were requested, were the mass spectra and TIC data subject to appropriate checks?			✓		
Interference Check Sample (ICS) results:					
Were percent recoveries within method QC limits?			✓		
Serial dilutions, post digestion spikes, and method of standard additions					
Were percent differences, recoveries, and the linearity within the QC limits specified in the method?			✓		
Method detection limit (MDL) studies					
Was a MDL study performed for each reported analyte?	✓				
Is the MDL either adjusted or supported by the analysis of DCSs?	✓				
Proficiency test reports:					
Was the laboratory's performance acceptable on the applicable proficiency tests or evaluation studies?	✓				

Description	Yes	No	NA(1)	NR(2)	ER(3)
Standards documentation					
Are all standards used in the analyses NIST-traceable or obtained from other appropriate sources?	✓				
Compound/analyte identification procedures					
Are the procedures for compound/analyte identification documented?	✓				
Demonstration of analyst competency (DOC)					
Was DOC conducted consistent with NELAC Chapter 5C or ISO/IEC 4?	✓				
Is documentation of the analyst's competency up-to-date and on file?	✓				
Verification/validation documentation for methods (NELAC Chap 5 or ISO/IEC 17025 Section 5)					
Are all the methods used to generate the data documented, verified, and validated, where applicable?	✓				
Laboratory standard operating procedures (SOPs):					
Are laboratory SOPs current and on file for each method performed?	✓				

00095868

KEMRON Environmental Services
Laboratory Review Checklist

Laboratory Name:	KEMRON
Laboratory Log Number:	L0612485
Project Name:	798-LONGHORN
Method:	300
Prep Batch Number(s):	WG230107
Reviewer Name:	MICHAEL D. COCHRAN
LRC Date:	December 20, 2006

EXCEPTIONS REPORT
ER# - Description
1. The MS and MSD associated with the analytical batch for these samples had % recoveries for Cl below the advisory limit. The parent sample chosen for the MS and MSD had a Cl result greater than the calibration range.
2. Samples L0612485-01, 03, 04, 05, 06 were analyzed for NO2 and NO3 at a dilution due to the levels of Cl and SO4 in them. The Cl and SO4 levels are too high in order to analyze these samples undiluted for NO2 and NO3. Cl peaks of this magnitude in size ”cover up” any NO2 peak near its RL. The analytical column has a tolerance of 200 ppm for a single anion and 400 ppm for all anions before the column becomes overloaded. The dilutions chosen for NO2 and NO3 were performed in order to reduce the total anion load on the analytical column and reduce the interference of large Cl peaks over NO2’s retention time window.

Footnotes:
(1) NA = Not applicable to method or project
(2) NR = Not reviewed
(3) ER# = Exception report number

Laboratory Data Package Cover Page

00095870

This data Package consists of:

This signature page, the laboratory review checklists, and the following reportable data:

✓R1 Field chain-of-custody documentation;

✓R2 sample identification cross-reference;

R3 Test reports (analytical data sheets) for each enviornmental sample that includes:

a) Items consistant with NELAC 5.13 or ISO/IEC 17025 Section 5.10

b) dilution factors,

c) preparation methods,

d) Cleanup methods, and

e) If required for the project, tentatively identified compounds (TICs)

✓R4 Surrogate recovery data including:

a) Calculated recovery (%R) for each analyte, and

b) The laboratory's surrogate QC limits.

✓R5 Test reports/summary forms for blank samples;

✓R6 Test reports/summary forms for laboratory control samples (LCSs) including:

a) LCS spiking amount,

b) Calculated %R for each analyte, and

c) The laboratory"s LCS QC limits.

✓R7 Test reports for project matrix spike/matrix spike duplicates (MS/MSDs) including:

a) Samples associated with the MS/MSD clearly identified,

b) MS/MSD spiking amounts,

c) Concentration of each MS/MSD analyte measured in the parent and spiked samples,

d) Calculated %R and relative percent differences (RPDs), and

e) The laboratory's MS/MSD QC limits

✓R8 Laboratory analytical duplicate (if applicable) revocery and precision:

a) the amount of analyte measured in the duplicate,

b) the calculated RPD, and

c) the laboratory's QC limits for anlytical duplicates.

✓R9 List of method quantitation limits (MQLs) for each analyte for each method and matrix;

✓R10 Other problems or anomalies.

✓The exception Report for every "No" or "Not Reviewed (NR)" item IN laboratory review checklist.

Release statement: I am responsible for the release of this laboratory data package. This data package has been reviewed by the laboratory and is complete and technically compliant with the requirements of the methods used, except where noted by the laboratory in the attached exceptions reports. By my signature below, I affirm to the best of my knowledge, all problems/anomalies, observed by the laboratory as having the potential to affect the quality of the data, have been identified by the laboratoy in the Laboratory Review Checklist, and no information or data have been knowingly withheld that would affect the quality of the data.

Check, if applicable: [✓] This laboratory is an in-house laboratory controlled by the person repsonding to rule. The official signing the cover page of the rule-required report (for example, the APAR) in which these data are used is responsible for releasing this data package and is by signature affirming the above release statement is true.

MIKE D. ALBERTSON		Volatiles Lab Supervisor	December 27, 2006
Name (Printed)	Signature	Official Title (printed)	DATE

RG-366/TRRP-13 December 2002 A1

KEMRON Environmental Services
Laboratory Review Checklist

Laboratory Name:	KEMRON
Laboratory Log Number:	L0612485
Project Name:	798-LONGHORN
Method:	GC
Prep Batch Number(s):	WG230008, WG230108
Reviewer Name:	MIKE D. ALBERTSON
LRC Date:	December 27, 2006

Description	Yes	No	NA(1)	NR(2)	ER(3)
Chain-Of-Custody (C-O-C)					
Did samples meet the laboratory's standard conditions of sample acceptability upon receipt?	✓				
Were all departures from standard conditions described in an exception report?	✓				
Sample and quality control (QC) identification					
Are all field sample ID numbers cross-referenced to the laboratory ID numbers?	✓				
Are all laboratory ID numbers cross-referenced to the corresponding QC data?	✓				
Test reports					
Were all samples prepared and analyzed within holding times?	✓				
Other than those results <MQL, were all other raw values bracketed by calibration standards?	✓				
Were calculations checked by a peer or supervisor?	✓				
Were all analyte identifications checked by a peer or supervisor?	✓				
Were sample quantitation limits reported for all analytes not detected?	✓				
Were all results for soil and sediment samples reported on a dry weight basis?			✓		
Were % moisture (or solids) reported for all soil and sediment samples?			✓		
If required for the project, TICs reported?			✓		
Surrogate recovery data					
Were surrogates added prior to extraction?			✓		
Were surrogate percent recoveries in all samples within the laboratory QC limits?			✓		
Test reports/summary forms for blank samples					
Were appropriate type(s) of blanks analyzed?	✓				
Were blanks analyzed at the appropriate frequency?	✓				
Were method blanks taken through the entire analytical process, including preparation and, if applicable, cleanup procedures?	✓				
Were blank concentrations <MQL?	✓				
Laboratory control samples (LCS):					
Were all COCs included in the LCS?	✓				
Was each LCS taken through the entire analytical procedure, including prep and cleanup steps?	✓				
Were LCSs analyzed at the required frequency?	✓				
Were LCS (and LCSD, if applicable) %Rs within the laboratory QC limits?	✓				
Does the detectability data document the laboratorys capability to detect the COCs at the MDL used to calculate the SQLs?	✓				
Was the LCSD RPD within QC limits?	✓				
Matrix spike (MS) and matrix spike duplicate (MSD) data					
Were the project/method specified analytes included in the MS and MSD?			✓		
Were MS/MSD analyzed at the appropriate frequency?			✓		
Were MS (and MSD, if applicable) %Rs within the laboratory QC limits?			✓		

Description	Yes	No	NA(1)	NR(2)	ER(3)
Were MS/MSD RPDs within laboratory QC limits?			✓		
Analytical duplicate data					
Were appropriate analytical duplicates analyzed for each matrix?			✓		
Were analytical duplicates analyzed at the appropriate frequency?			✓		
Were RPDs or relative standard deviations within the laboratory QC limits?			✓		
Method quantitation limits (MQLs):					
Are the MQLs for each method analyte included in the laboratory data package?	✓				
Do the MQLs correspond to the concentration of the lowest non-zero calibration standard?	✓				
Are unadjusted MQLs included in the laboratory data package?	✓				
Other problems/anomalies					
Are all known problems/anomalies/special conditions noted in this LRC and ER?	✓				
Were all necessary corrective actions performed for the reported data?	✓				
Was applicable and available technology used to lower the SQL minimize the matrix interference affects on the sample results?	✓				
ICAL					
Were response factors and/or relative response factors for each analyte within QC limits?	✓				
Were percent RSDs or correlation coefficient criteria met?	✓				
Was the number of standards recommended in the method used for all analytes?	✓				
Were all points generated between the lowest and highest standard used to calculate the curve?	✓				
Are ICAL data available for all instruments used?	✓				
Has the initial calibration curve been verified using an appropriate second source standard?	✓				
Initial and continuing calibration verification (ICV and CCV) and continuing calibration blank (CCB):					
Was the CCV analyzed at the method-required frequency?	✓				
Were percent differences for each analyte within the method-required QC limits?	✓				
Was the ICAL curve verified for each analyte?	✓				
Was the absolute value of the analyte concentration in the inorganic CCB <MDL?			✓		
Mass spectral tuning:					
Was the appropriate compound for the method used for tuning?			✓		
Were ion abundance data within the method-required QC limits?			✓		
Internal standards (IS):					
Were IS area counts and retention times within the method-required QC limits?			✓		
Raw data (NELAC section 1 appendix A glossary, and section 5.12 or ISO/IEC 17025 section 4.12.2)					
Were the raw data (for example, chromatograms, spectral data) reviewed by an analyst?	✓				
Were data associated with manual integrations flagged on the raw data?	✓				
Dual column confirmation					
Did dual column confirmation results meet the method-required QC?			✓		
Tentatively identified compounds (TICs):					
If TICs were requested, were the mass spectra and TIC data subject to appropriate checks?			✓		
Interference Check Sample (ICS) results:					
Were percent recoveries within method QC limits?			✓		
Serial dilutions, post digestion spikes, and method of standard additions					
Were percent differences, recoveries, and the linearity within the QC limits specified in the method?			✓		
Method detection limit (MDL) studies					
Was a MDL study performed for each reported analyte?	✓				
Is the MDL either adjusted or supported by the analysis of DCSs?	✓				
Proficiency test reports:					
Was the laboratory's performance acceptable on the applicable proficiency tests or evaluation studies?	✓				

00095872

Description	Yes	No	NA(1)	NR(2)	ER(3)
Standards documentation					
Are all standards used in the analyses NIST-traceable or obtained from other appropriate sources?	✓				
Compound/analyte identification procedures					
Are the procedures for compound/analyte identification documented?	✓				
Demonstration of analyst competency (DOC)					
Was DOC conducted consistent with NELAC Chapter 5C or ISO/IEC 4?	✓				
Is documentation of the analyst's competency up-to-date and on file?	✓				
Verification/validation documentation for methods (NELAC Chap 5 or ISO/IEC 17025 Section 5)					
Are all the methods used to generate the data documented, verified, and validated, where applicable?	✓				
Laboratory standard operating procedures (SOPs):					
Are laboratory SOPs current and on file for each method performed?	✓				

EXCEPTIONS REPORT

ER# - Description

No exceptions.

Footnotes:

(1) NA = Not applicable to method or project

(2) NR = Not reviewed

(3) ER# = Exception report number

Laboratory Data Package Cover Page

00095874

This data Package consists of:

This signature page, the laboratory review checklists, and the following reportable data:

R1 Field chain-of-custody documentation;

R2 sample identification cross-reference;

R3 Test reports (analytical data sheets) for each enviornmental sample that includes:

a) Items consistant with NELAC 5.13 or ISO/IEC 17025 Section 5.10

b) dilution factors,

c) preparation methods,

d) Cleanup methods, and

e) If required for the project, tentatively identified compounds (TICs)

R4 Surrogate recovery data including:

a) Calculated recovery (%R) for each analyte, and

b) The laboratory's surrogate QC limits.

✓R5 Test reports/summary forms for blank samples;

✓R6 Test reports/summary forms for laboratory control samples (LCSs) including:

a) LCS spiking amount,

b) Calculated %R for each analyte, and

c) The laboratory"s LCS QC limits.

R7 Test reports for project matrix spike/matrix spike duplicates (MS/MSDs) including:

a) Samples associated with the MS/MSD clearly identified,

b) MS/MSD spiking amounts,

c) Concentration of each MS/MSD analyte measured in the parent and spiked samples,

d) Calculated %R and relative percent differences (RPDs), and

e) The laboratory's MS/MSD QC limits

R8 Laboratory analytical duplicate (if applicable) revocery and precision:

a) the amount of analyte measured in the duplicate,

b) the calculated RPD, and

c) the laboratory's QC limits for anlytical duplicates.

R9 List of method quantitation limits (MQLs) for each analyte for each method and matrix;

R10 Other problems or anomalies.

The exception Report for every "No" or "Not Reviewed (NR)" item in laboratory review checklist.

Release statement: I am responsible for the release of this laboratory data package. This data package has been reviewed by the laboratory and is complete and technically compliant with the requirements of the methods used, except where noted by the laboratory in the attached exceptions reports. By my signature below, I affirm to the best of my knowledge, all problems/anomalies, observed by the laboratory as having the potential to affect the quality of the data, have been identified by the laboratoy in the Laboratory Review Checklist, and no information or data have been knowingly withheld that would affect the quality of the data.

Check, If applicable: [] This laboratory is an in-house laboratory controlled by the person repsonding to rule. The official signing the cover page of the rule-required report (for example, the APAR) in which these data are used is responsible for releasing this data package and is by signature affirming the above release statement is trus.

DEANNA I. HESSON	Deanna Hesson	Conventional Lab Supervisor	December 28, 2006
Name (Printed)	Signature	Official Title (printed)	DATE

RG-366/TRRP-13 December 2002 A1

KEMRON Environmental Services
Laboratory Review Checklist

Laboratory Name:	KEMRON
Laboratory Log Number:	L0612485
Project Name:	798-LONGHORN
Method:	TOC
Prep Batch Number(s):	WG230208, WG230345
Reviewer Name:	DEANNA I. HESSON
LRC Date:	December 28, 2006

Description	Yes	No	NA(1)	NR(2)	ER(3)
Chain-Of-Custody (C-O-C)					
Did samples meet the laboratory's standard conditions of sample acceptability upon receipt?	✓				
Were all departures from standard conditions described in an exception report?	✓				
Sample and quality control (QC) identification					
Are all field sample ID numbers cross-referenced to the laboratory ID numbers?	✓				
Are all laboratory ID numbers cross-referenced to the corresponding QC data?	✓				
Test reports					
Were all samples prepared and analyzed within holding times?	✓				
Other than those results <MQL, were all other raw values bracketed by calibration standards?	✓				
Were calculations checked by a peer or supervisor?	✓				
Were all analyte identifications checked by a peer or supervisor?	✓				
Were sample quantitation limits reported for all analytes not detected?	✓				
Were all results for soil and sediment samples reported on a dry weight basis?	✓				
Were % moisture (or solids) reported for all soil and sediment samples?	✓				
If required for the project, TICs reported?	✓				
Surrogate recovery data					
Were surrogates added prior to extraction?			✓		
Were surrogate percent recoveries in all samples within the laboratory QC limits?			✓		
Test reports/summary forms for blank samples					
Were appropriate type(s) of blanks analyzed?	✓				
Were blanks analyzed at the appropriate frequency?	✓				
Were method blanks taken through the entire analytical process, including preparation and, if applicable, cleanup procedures?	✓				
Were blank concentrations <MQL?	✓				
Laboratory control samples (LCS):					
Were all COCs included in the LCS?	✓				
Was each LCS taken through the entire analytical procedure, including prep and cleanup steps?	✓				
Were LCSs analyzed at the required frequency?	✓				
Were LCS (and LCSD, if applicable) %Rs within the laboratory QC limits?	✓				
Does the detectability data document the laboratorys capability to detect the COCs at the MDL used to calculate the SQLs?	✓				
Was the LCSD RPD within QC limits?	✓				
Matrix spike (MS) and matrix spike duplicate (MSD) data					
Were the project/method specified analytes included in the MS and MSD?	✓				
Were MS/MSD analyzed at the appropriate frequency?	✓				
Were MS (and MSD, if applicable) %Rs within the laboratory QC limits?	✓				

Description	Yes	No	NA(1)	NR(2)	ER(3)
Were MS/MSD RPDs within laboratory QC limits?	✓				
Analytical duplicate data					
Were appropriate analytical duplicates analyzed for each matrix?	✓				
Were analytical duplicates analyzed at the appropriate frequency?	✓				
Were RPDs or relative standard deviations within the laboratory QC limits?	✓				
Method quantitation limits (MQLs):					
Are the MQLs for each method analyte included in the laboratory data package?	✓				
Do the MQLs correspond to the concentration of the lowest non-zero calibration standard?	✓				
Are unadjusted MQLs included in the laboratory data package?	✓				
Other problems/anomalies					
Are all known problems/anomalies/special conditions noted in this LRC and ER?	✓				
Were all necessary corrective actions performed for the reported data?	✓				
Was applicable and available technology used to lower the SQL minimize the matrix interference affects on the sample results?	✓				
Were response factors and/or relative response factors for each analyte within QC limits?	✓				
Were percent RSDs or correlation coefficient criteria met?	✓				
Was the number of standards recommended in the method used for all analytes?	✓				
Were all points generated between the lowest and highest standard used to calculate the curve?	✓				
Are ICAL data available for all instruments used?	✓				
Has the initial calibration curve been verified using an appropriate second source standard?	✓				
Initial and continuing calibration verification (ICV and CCV) and continuing calibration blank (CCB):					
Was the CCV analyzed at the method-required frequency?	✓				
Were percent differences for each analyte within the method-required QC limits?	✓				
Was the ICAL curve verified for each analyte?	✓				
Was the absolute value of the analyte concentration in the inorganic CCB <MDL?	✓				
Mass spectral tuning:					
Was the appropriate compound for the method used for tuning?			✓		
Were ion abundance data within the method-required QC limits?			✓		
Internal standards (IS):					
Were IS area counts and retention times within the method-required QC limits?			✓		
Raw data (NELAC section 1 appendix A glossary, and section 5.12 or ISO/IEC 17025 section 4.12.2)					
Were the raw data (for example, chromatograms, spectral data) reviewed by an analyst?	✓				
Were data associated with manual integrations flagged on the raw data?			✓		
Dual column confirmation					
Did dual column confirmation results meet the method-required QC?			✓		
Tentatively identified compounds (TICs):					
If TICs were requested, were the mass spectra and TIC data subject to appropriate checks?			✓		
Interference Check Sample (ICS) results:					
Were percent recoveries within method QC limits?			✓		
Serial dilutions, post digestion spikes, and method of standard additions					
Were percent differences, recoveries, and the linearity within the QC limits specified in the method?			✓		
Method detection limit (MDL) studies					
Was a MDL study performed for each reported analyte?	✓				
Is the MDL either adjusted or supported by the analysis of DCSs?	✓				
Proficiency test reports:					
Was the laboratory's performance acceptable on the applicable proficiency tests or evaluation studies?	✓				

Description	Yes	No	NA(1)	NR(2)	ER(3)
Standards documentation					
Are all standards used in the analyses NIST-traceable or obtained from other appropriate sources?	✓				
Compound/analyte identification procedures					
Are the procedures for compound/analyte identification documented?	✓				
Demonstration of analyst competency (DOC)					
Was DOC conducted consistent with NELAC Chapter 5C or ISO/IEC 4?	✓				
Is documentation of the analyst's competency up-to-date and on file?	✓				
Verification/validation documentation for methods (NELAC Chap 5 or ISO/IEC 17025 Section 5)					
Are all the methods used to generate the data documented, verified, and validated, where applicable?	✓				
Laboratory standard operating procedures (SOPs):					
Are laboratory SOPs current and on file for each method performed?	✓				

KEMRON Environmental Services
Laboratory Review Checklist

Laboratory Name:	KEMRON
Laboratory Log Number:	L0612485
Project Name:	798-LONGHORN
Method:	TOC
Prep Batch Number(s):	WG230208, WG230345
Reviewer Name:	DEANNA I. HESSON
LRC Date:	December 28, 2006

EXCEPTIONS REPORT
ER# - Description
Footnotes:
(1) NA = Not applicable to method or project
(2) NR = Not reviewed
(3) ER# = Exception report number

LABORATORY REPORT

L0612485

00095879

01/03/07 08:23

Submitted By

KEMRON Environmental Services
156 Starlite Drive
Marietta , OH 45750
(740) 373 - 4071

For

Account Name: Shaw E & I, Inc.
ABB Lummus Biulding
3010 Briarpark
Houston, TX 77042
Attention: Diane Mever

Account Number: 2773
Work ID: LHAAP

P.O. Number: 200328

Sample Summary

Client ID	Lab ID	Date Collected	Date Received
12WW01	L0612485-01	19-DEC-06	20-DEC-06
12WW02	L0612485-02	19-DEC-06	20-DEC-06
12WW20	L0612485-03	19-DEC-06	20-DEC-06
12WW24	L0612485-04	19-DEC-06	20-DEC-06
12WW05	L0612485-05	19-DEC-06	20-DEC-06
12WW24-QC	L0612485-06	19-DEC-06	20-DEC-06
29WW40	L0612485-07	19-DEC-06	20-DEC-06

Report Number: **L0612485**
Report Date : **January 3, 2007**

00095880

Sample Number: **L0612485-01**
Client ID: **12WW01**
Matrix: **Water**
Workgroup Number: **WG230008**
Collect Date: **12/19/2006 14:15**
Sample Tag: **01**

PrePrep Method: **NONE**
Prep Method: **5021**
Analytical Method: **RSK175**
Analyst: **JLS**
Dilution: **1**
Units: **ug/L**

Instrument: **HP16**
Prep Date: **12/20/2006 17:49**
Cal Date: **09/27/2006 15:29**
Run Date: **12/20/2006 17:49**
File ID: **16G5686**

Analyte	CAS. Number	Result	Qual	PQL	SQL
methane	74-82-8	0.295	J	0.500	0.250
ethene	74-85-1		U	0.500	0.250
ethane	74-84-0		U	0.500	0.250

U Not detected at or above adjusted sample detection limit
J The analyte was positively identified, but the quantitation was below the RL

Sample Number: **L0612485-01**
Client ID: **12WW01**
Matrix: **Water**
Workgroup Number: **WG230107**
Collect Date: **12/19/2006 14:15**
Sample Tag: **DL03**

PrePrep Method: **NONE**
Prep Method: **300.0**
Analytical Method: **300.0**
Analyst: **JWR**
Dilution: **100**
Units: **mg/L**

Instrument: **IC2**
Prep Date: **12/20/2006 15:40**
Cal Date: **12/08/2006 18:15**
Run Date: **12/20/2006 15:40**
File ID: **I2122006.22**

Analyte	CAS. Number	Result	Qual	PQL	SQL
Chloride	16887-00-6	742		20.0	10.0
Nitrate	14797-55-8		U	60.0	10.0
Nitrite	14797-65-0		U	40.0	10.0
Sulfate	14808-79-8	377		100	50.0

U Not detected at or above adjusted sample detection limit

Sample Number: **L0612485-01**
Client ID: **12WW01**
Matrix: **Water**
Workgroup Number: **WG230107**
Collect Date: **12/19/2006 14:15**
Sample Tag: **DL01**

PrePrep Method: **NONE**
Prep Method: **300.0**
Analytical Method: **300.0**
Analyst: **JWR**
Dilution: **10**
Units: **mg/L**

Instrument: **IC2**
Prep Date: **12/20/2006 13:38**
Cal Date: **12/08/2006 18:15**
Run Date: **12/20/2006 13:38**
File ID: **I2122006.15**

Analyte	CAS. Number	Result	Qual	PQL	SQL
Chloride	16887-00-6	681	I	2.00	1.00
Nitrate	14797-55-8		U	6.00	1.00
Nitrite	14797-65-0		U	4.00	1.00
Sulfate	14808-79-8	386		10.0	5.00

U Not detected at or above adjusted sample detection limit
I Semiquantitative result (out of instrument calibration range)

Sample Number: **L0612485-01**
Client ID: **12WW01**
Matrix: **Water**
Workgroup Number: **WG230107**
Collect Date: **12/19/2006 14:15**
Sample Tag: **DL02**

PrePrep Method: **NONE**
Prep Method: **300.0**
Analytical Method: **300.0**
Analyst: **JWR**
Dilution: **4**
Units: **mg/L**

Instrument: **IC2**
Prep Date: **12/20/2006 15:22**
Cal Date: **12/08/2006 18:15**
Run Date: **12/20/2006 15:22**
File ID: **I2122006.21**

Analyte	CAS. Number	Result	Qual	PQL	SQL
Chloride	16887-00-6	559	I	0.800	0.400
Nitrate	14797-55-8		U	2.40	0.400
Nitrite	14797-65-0		U	1.60	0.400
Sulfate	14808-79-8	391	I	4.00	2.00

U Not detected at or above adjusted sample detection limit
I Semiquantitative result (out of instrument calibration range)

Report Number: **L0612485**
Report Date : **January 3, 2007**

00095881

Sample Number: **L0612485-01**
Client ID: **12WW01**
Matrix: **Water**
Workgroup Number: **WG230208**
Collect Date: **12/19/2006 14:15**
Sample Tag: **01**

PrePrep Method: **NONE**
Prep Method: **415.1**
Analytical Method: **415.1**
Analyst: **DIH**
Dilution: **1**
Units: **mg/L**

Instrument: **TOC-VWP**
Prep Date: **12/26/2006 22:34**
Cal Date: **01/12/2006 10:36**
Run Date: **12/26/2006 22:34**
File ID: **TC12-26-2006.36**

Analyte	CAS. Number	Result	Qual	PQL	SQL
Total Organic Carbon		8.44		1.00	0.500

Sample Number: **L0612485-01**
Client ID: **12WW01**
Matrix: **Water**
Workgroup Number: **WG230208**
Collect Date: **12/19/2006 14:15**
Sample Tag: **01**

PrePrep Method: **NONE**
Prep Method: **415.1**
Analytical Method: **415.1**
Analyst: **DIH**
Dilution: **1**
Units: **mg/L**

Instrument: **TOC-VWP**
Prep Date: **12/26/2006 22:34**
Cal Date: **01/12/2006 10:36**
Run Date: **12/26/2006 22:34**
File ID: **TC12-26-2006.36**

Analyte	CAS. Number	Result	Qual	PQL	SQL
Total Inorganic Carbon		33.6		1.00	0.500

Sample Number: **L0612485-01**
Client ID: **12WW01**
Matrix: **Water**
Workgroup Number: **WG230324**
Collect Date: **12/19/2006 14:15**
Sample Tag: **01**

PrePrep Method: **NONE**
Prep Method: **5030B**
Analytical Method: **8260B**
Analyst: **CMS**
Dilution: **1**
Units: **ug/L**

Instrument: **HPMS11**
Prep Date: **12/27/2006 15:58**
Cal Date: **11/28/2006 12:56**
Run Date: **12/27/2006 15:58**
File ID: **11M39130**

Analyte	CAS. Number	Result	Qual	PQL	SQL
1,1,1-Trichloroethane	71-55-6		U	5.00	0.250
1,1,2,2-Tetrachloroethane	79-34-5		U	5.00	0.125
1,1,2-Trichloro-1,2,2-Trifluoroethane	76-13-1		U	10.0	0.250
1,1,2-Trichloroethane	79-00-5		U	5.00	0.250
1,1-Dichloroethane	75-34-3		U	5.00	0.125
1,1-Dichloroethene	75-35-4		U	5.00	0.500
1,2,4-Trichlorobenzene	120-82-1		U	5.00	0.200
1,2-Dibromo-3-chloropropane	96-12-8		U	5.00	1.00
1,2-Dibromoethane	106-93-4		U	5.00	0.250
1,2-Dichlorobenzene	95-50-1		U	5.00	0.125
1,2-Dichloroethane	107-06-2		U	5.00	0.250
cis-1,2-Dichloroethene	156-59-2		U	10.0	0.250
trans-1,2-Dichloroethene	156-60-5		U	5.00	0.250
1,2-Dichloropropane	78-87-5		U	5.00	0.200
1,3-Dichlorobenzene	541-73-1		U	5.00	0.250
1,4-Dichlorobenzene	106-46-7		U	5.00	0.125
2-Butanone	78-93-3		U	10.0	2.50
2-Hexanone	591-78-6		U	10.0	2.50
4-Methyl-2-pentanone	108-10-1		U	10.0	2.50
Acetone	67-64-1	111		10.0	2.50
Benzene	71-43-2		U	5.00	0.125

Report Number: **L0612485**
Report Date : **January 3, 2007**

00095882

Sample Number: **L0612485-01**
Client ID: **12WW01**
Matrix: **Water**
Workgroup Number: **WG230324**
Collect Date: **12/19/2006 14:15**
Sample Tag: **01**

PrePrep Method: **NONE**
Prep Method: **5030B**
Analytical Method: **8260B**
Analyst: **CMS**
Dilution: **1**
Units: **ug/L**

Instrument: **HPMS11**
Prep Date: **12/27/2006 15:58**
Cal Date: **11/28/2006 12:56**
Run Date: **12/27/2006 15:58**
File ID: **11M39130**

Analyte	CAS. Number	Result	Qual	PQL	SQL
Bromodichloromethane	75-27-4		U	5.00	0.250
Bromoform	75-25-2		U	5.00	0.500
Bromomethane	74-83-9		U	10.0	0.500
Carbon disulfide	75-15-0		U	5.00	0.500
Carbon tetrachloride	56-23-5		U	5.00	0.250
Chlorobenzene	108-90-7		U	5.00	0.125
Chloroethane	75-00-3		U	10.0	0.500
Chloroform	67-66-3		U	5.00	0.125
Chloromethane	74-87-3		U	10.0	0.250
cis-1,3-Dichloropropene	10061-01-5		U	5.00	0.250
Cyclohexane	110-82-7		U	10.0	0.250
Dibromochloromethane	124-48-1		U	5.00	0.250
Dichlorodifluoromethane	75-71-8		U	10.0	0.250
Ethyl benzene	100-41-4		U	5.00	0.250
Isopropylbenzene	98-82-8		U	5.00	0.250
Methyl acetate	79-20-9		U	10.0	0.250
Methyl tert-butyl ether	1634-04-4		U	5.00	0.500
Methylcyclohexane	108-87-2		U	10.0	0.250
Methylene chloride	75-09-2		U	5.00	0.250
Styrene	100-42-5		U	5.00	0.125
Tetrachloroethene	127-18-4		U	5.00	0.250
Toluene	108-88-3		U	5.00	0.250
trans-1,3-Dichloropropene	10061-02-6		U	5.00	0.500
Trichloroethene	79-01-6		U	5.00	0.250
Trichlorofluoromethane	75-69-4		U	10.0	0.250
Vinyl chloride	75-01-4		U	10.0	0.250
Xylenes, Total	1330-20-7		U	5.00	0.500

Surrogate	% Recovery	Lower	Upper	Qual
1,2-Dichloroethane-d4	93.6	80	120	
Dibromofluoromethane	95.6	86	118	
p-Bromofluorobenzene	89.7	86	115	
Toluene-d8	93.3	88	110	

U Not detected at or above adjusted sample detection limit

Sample Number: **L0612485-02**
Client ID: **12WW02**
Matrix: **Water**
Workgroup Number: **WG230345**
Collect Date: **12/19/2006 10:05**
Sample Tag: **DL01**

PrePrep Method: **NONE**
Prep Method: **415.1**
Analytical Method: **415.1**
Analyst: **DIH**
Dilution: **4**
Units: **mg/L**

Instrument: **TOC-VWP**
Prep Date: **12/27/2006 12:39**
Cal Date: **01/12/2006 10:36**
Run Date: **12/27/2006 12:39**
File ID: **TC12-27-2006.07**

Analyte	CAS. Number	Result	Qual	PQL	SQL
Total Inorganic Carbon		98.4		4.00	2.00

Report Number: **L0612485**
Report Date : **January 3, 2007**

00095883

Sample Number: **L0612485-02**
Client ID: **12WW02**
Matrix: **Water**
Workgroup Number: **WG230345**
Collect Date: **12/19/2006 10:05**
Sample Tag: **DL01**

PrePrep Method: **NONE**
Prep Method: **415.1**
Analytical Method: **415.1**
Analyst: **DIH**
Dilution: **4**
Units: **mg/L**

Instrument: **TOC-VWP**
Prep Date: **12/27/2006 12:39**
Cal Date: **01/12/2006 10:36**
Run Date: **12/27/2006 12:39**
File ID: **TC12-27-2006.07**

Analyte	CAS. Number	Result	Qual	PQL	SQL
Total Organic Carbon		17.7		4.00	2.00

Sample Number: **L0612485-02**
Client ID: **12WW02**
Matrix: **Water**
Workgroup Number: **WG230324**
Collect Date: **12/19/2006 10:05**
Sample Tag: **01**

PrePrep Method: **NONE**
Prep Method: **5030B**
Analytical Method: **8260B**
Analyst: **CMS**
Dilution: **1**
Units: **ug/L**

Instrument: **HPMS11**
Prep Date: **12/27/2006 16:29**
Cal Date: **11/28/2006 12:56**
Run Date: **12/27/2006 16:29**
File ID: **11M39131**

Analyte	CAS. Number	Result	Qual	PQL	SQL
1,1,1-Trichloroethane	71-55-6		U	5.00	0.250
1,1,2,2-Tetrachloroethane	79-34-5		U	5.00	0.125
1,1,2-Trichloro-1,2,2-Trifluoroethane	76-13-1		U	10.0	0.250
1,1,2-Trichloroethane	79-00-5		U	5.00	0.250
1,1-Dichloroethane	75-34-3	4.11	J	5.00	0.125
1,1-Dichloroethene	75-35-4		U	5.00	0.500
1,2,4-Trichlorobenzene	120-82-1		U	5.00	0.200
1,2-Dibromo-3-chloropropane	96-12-8		U	5.00	1.00
1,2-Dibromoethane	106-93-4		U	5.00	0.250
1,2-Dichlorobenzene	95-50-1		U	5.00	0.125
1,2-Dichloroethane	107-06-2		U	5.00	0.250
cis-1,2-Dichloroethene	156-59-2	1.39	J	10.0	0.250
trans-1,2-Dichloroethene	156-60-5		U	5.00	0.250
1,2-Dichloropropane	78-87-5		U	5.00	0.200
1,3-Dichlorobenzene	541-73-1		U	5.00	0.250
1,4-Dichlorobenzene	106-46-7	0.254	J	5.00	0.125
2-Butanone	78-93-3		U	10.0	2.50
2-Hexanone	591-78-6		U	10.0	2.50
4-Methyl-2-pentanone	108-10-1		U	10.0	2.50
Acetone	67-64-1		U	10.0	2.50
Benzene	71-43-2	0.230	J	5.00	0.125
Bromodichloromethane	75-27-4		U	5.00	0.250
Bromoform	75-25-2		U	5.00	0.500
Bromomethane	74-83-9		U	10.0	0.500
Carbon disulfide	75-15-0		U	5.00	0.500
Carbon tetrachloride	56-23-5		U	5.00	0.250
Chlorobenzene	108-90-7	0.177	J	5.00	0.125
Chloroethane	75-00-3	0.685	J	10.0	0.500
Chloroform	67-66-3		U	5.00	0.125
Chloromethane	74-87-3		U	10.0	0.250
cis-1,3-Dichloropropene	10061-01-5		U	5.00	0.250
Cyclohexane	110-82-7		U	10.0	0.250
Dibromochloromethane	124-48-1		U	5.00	0.250
Dichlorodifluoromethane	75-71-8		U	10.0	0.250

Sample Number: **L0612485-02**
Client ID: **12WW02**
Matrix: **Water**
Workgroup Number: **WG230324**
Collect Date: **12/19/2006 10:05**
Sample Tag: **01**

PrePrep Method: **NONE**
Prep Method: **5030B**
Analytical Method: **8260B**
Analyst: **CMS**
Dilution: **1**
Units: **ug/L**

Instrument: **HPMS11**
Prep Date: **12/27/2006 16:29**
Cal Date: **11/28/2006 12:56**
Run Date: **12/27/2006 16:29**
File ID: **11M39131**

Analyte	CAS. Number	Result	Qual	PQL	SQL
Ethyl benzene	100-41-4		U	5.00	0.250
Isopropylbenzene	98-82-8		U	5.00	0.250
Methyl acetate	79-20-9		U	10.0	0.250
Methyl tert-butyl ether	1634-04-4		U	5.00	0.500
Methylcyclohexane	108-87-2		U	10.0	0.250
Methylene chloride	75-09-2		U	5.00	0.250
Styrene	100-42-5		U	5.00	0.125
Tetrachloroethene	127-18-4		U	5.00	0.250
Toluene	108-88-3		U	5.00	0.250
trans-1,3-Dichloropropene	10061-02-6		U	5.00	0.500
Trichloroethene	79-01-6		U	5.00	0.250
Trichlorofluoromethane	75-69-4		U	10.0	0.250
Vinyl chloride	75-01-4	4.30	J	10.0	0.250
Xylenes, Total	1330-20-7		U	5.00	0.500

Surrogate	% Recovery	Lower	Upper	Qual
1,2-Dichloroethane-d4	94.1	80	120	
Dibromofluoromethane	96.5	86	118	
p-Bromofluorobenzene	90.7	86	115	
Toluene-d8	92.5	88	110	

U Not detected at or above adjusted sample detection limit
J The analyte was positively identified, but the quantitation was below the RL

Sample Number: **L0612485-02**
Client ID: **12WW02**
Matrix: **Water**
Workgroup Number: **WG230008**
Collect Date: **12/19/2006 10:05**
Sample Tag: **01**

PrePrep Method: **NONE**
Prep Method: **5021**
Analytical Method: **RSK175**
Analyst: **JLS**
Dilution: **1**
Units: **ug/L**

Instrument: **HP16**
Prep Date: **12/20/2006 18:04**
Cal Date: **09/27/2006 15:29**
Run Date: **12/20/2006 18:04**
File ID: **16G5687**

Analyte	CAS. Number	Result	Qual	PQL	SQL
methane	74-82-8	701	I	0.500	0.250
ethene	74-85-1	0.771		0.500	0.250
ethane	74-84-0	0.335	J	0.500	0.250

J The analyte was positively identified, but the quantitation was below the RL
I Semiquantitative result (out of instrument calibration range)

Sample Number: **L0612485-02**
Client ID: **12WW02**
Matrix: **Water**
Workgroup Number: **WG230108**
Collect Date: **12/19/2006 10:05**
Sample Tag: **DL01**

PrePrep Method: **NONE**
Prep Method: **5021**
Analytical Method: **RSK175**
Analyst: **JLS**
Dilution: **10**
Units: **ug/L**

Instrument: **HP16**
Prep Date: **12/21/2006 17:21**
Cal Date: **09/27/2006 15:29**
Run Date: **12/21/2006 17:21**
File ID: **16G5719**

Analyte	CAS. Number	Result	Qual	PQL	SQL
methane	74-82-8	478		5.00	2.50
ethene	74-85-1		U	5.00	2.50
ethane	74-84-0		U	5.00	2.50

U Not detected at or above adjusted sample detection limit

Sample Number: **L0612485-02**
Client ID: **12WW02**
Matrix: **Water**
Workgroup Number: **WG230107**
Collect Date: **12/19/2006 10:05**
Sample Tag: **01**

PrePrep Method: **NONE**
Prep Method: **300.0**
Analytical Method: **300.0**
Analyst: **JWR**
Dilution: **1**
Units: **mg/L**

Instrument: **IC2**
Prep Date: **12/20/2006 16:32**
Cal Date: **12/08/2006 18:15**
Run Date: **12/20/2006 16:32**
File ID: **I2122006.25**

Analyte	CAS. Number	Result	Qual	PQL	SQL
Chloride	**16887-00-6**	**116**	**I**	**0.200**	**0.100**
Nitrate	**14797-55-8**		**U**	**0.600**	**0.100**
Nitrite	**14797-65-0**		**U**	**0.400**	**0.100**
Sulfate	**14808-79-8**	**46.9**		**1.00**	**0.500**

U Not detected at or above adjusted sample detection limit
I Semiquantitative result (out of instrument calibration range)

Sample Number: **L0612485-02**
Client ID: **12WW02**
Matrix: **Water**
Workgroup Number: **WG230107**
Collect Date: **12/19/2006 10:05**
Sample Tag: **DL01**

PrePrep Method: **NONE**
Prep Method: **300.0**
Analytical Method: **300.0**
Analyst: **JWR**
Dilution: **20**
Units: **mg/L**

Instrument: **IC2**
Prep Date: **12/20/2006 17:42**
Cal Date: **12/08/2006 18:15**
Run Date: **12/20/2006 17:42**
File ID: **I2122006.29**

Analyte	CAS. Number	Result	Qual	PQL	SQL
Chloride	**16887-00-6**	**152**		**4.00**	**2.00**
Nitrate	**14797-55-8**		**U**	**12.0**	**2.00**
Nitrite	**14797-65-0**		**U**	**8.00**	**2.00**
Sulfate	**14808-79-8**	**50.4**		**20.0**	**10.0**

U Not detected at or above adjusted sample detection limit

Sample Number: **L0612485-03**
Client ID: **12WW20**
Matrix: **Water**
Workgroup Number: **WG230107**
Collect Date: **12/19/2006 11:25**
Sample Tag: **DL02**

PrePrep Method: **NONE**
Prep Method: **300.0**
Analytical Method: **300.0**
Analyst: **JWR**
Dilution: **2**
Units: **mg/L**

Instrument: **IC2**
Prep Date: **12/20/2006 17:59**
Cal Date: **12/08/2006 18:15**
Run Date: **12/20/2006 17:59**
File ID: **I2122006.30**

Analyte	CAS. Number	Result	Qual	PQL	SQL
Chloride	**16887-00-6**	**223**	**I**	**0.400**	**0.200**
Nitrate	**14797-55-8**		**U**	**1.20**	**0.200**
Nitrite	**14797-65-0**		**U**	**0.800**	**0.200**
Sulfate	**14808-79-8**	**176**	**I**	**2.00**	**1.00**

U Not detected at or above adjusted sample detection limit
I Semiquantitative result (out of instrument calibration range)

Sample Number: **L0612485-03**
Client ID: **12WW20**
Matrix: **Water**
Workgroup Number: **WG230107**
Collect Date: **12/19/2006 11:25**
Sample Tag: **DL03**

PrePrep Method: **NONE**
Prep Method: **300.0**
Analytical Method: **300.0**
Analyst: **JWR**
Dilution: **40**
Units: **mg/L**

Instrument: **IC2**
Prep Date: **12/20/2006 18:16**
Cal Date: **12/08/2006 18:15**
Run Date: **12/20/2006 18:16**
File ID: **I2122006.31**

Analyte	CAS. Number	Result	Qual	PQL	SQL
Chloride	**16887-00-6**	**289**		**8.00**	**4.00**
Nitrate	**14797-55-8**		**U**	**24.0**	**4.00**
Nitrite	**14797-65-0**		**U**	**16.0**	**4.00**
Sulfate	**14808-79-8**	**182**		**40.0**	**20.0**

U Not detected at or above adjusted sample detection limit

Sample Number: **L0612485-03**
Client ID: **12WW20**
Matrix: **Water**
Workgroup Number: **WG230107**
Collect Date: **12/19/2006 11:25**
Sample Tag: **DL01**

PrePrep Method: **NONE**
Prep Method: **300.0**
Analytical Method: **300.0**
Analyst: **JWR**
Dilution: **10**
Units: **mg/L**

Instrument: **IC2**
Prep Date: **12/20/2006 14:13**
Cal Date: **12/08/2006 18:15**
Run Date: **12/20/2006 14:13**
File ID: **I2122006.17**

Analyte	CAS. Number	Result	Qual	PQL	SQL
Chloride	16887-00-6	279	I	2.00	1.00
Nitrate	14797-55-8		U	6.00	1.00
Nitrite	14797-65-0		U	4.00	1.00
Sulfate	14808-79-8	178		10.0	5.00

U Not detected at or above adjusted sample detection limit
I Semiquantitative result (out of instrument calibration range)

Sample Number: **L0612485-03**
Client ID: **12WW20**
Matrix: **Water**
Workgroup Number: **WG230324**
Collect Date: **12/19/2006 11:25**
Sample Tag: **01**

PrePrep Method: **NONE**
Prep Method: **5030B**
Analytical Method: **8260B**
Analyst: **CMS**
Dilution: **1**
Units: **ug/L**

Instrument: **HPMS11**
Prep Date: **12/27/2006 13:24**
Cal Date: **11/28/2006 12:56**
Run Date: **12/27/2006 13:24**
File ID: **11M39125**

Analyte	CAS. Number	Result	Qual	PQL	SQL
1,1,1-Trichloroethane	71-55-6		U	5.00	0.250
1,1,2,2-Tetrachloroethane	79-34-5		U	5.00	0.125
1,1,2-Trichloro-1,2,2-Trifluoroethane	76-13-1		U	10.0	0.250
1,1,2-Trichloroethane	79-00-5		U	5.00	0.250
1,1-Dichloroethane	75-34-3		U	5.00	0.125
1,1-Dichloroethene	75-35-4		U	5.00	0.500
1,2,4-Trichlorobenzene	120-82-1		U	5.00	0.200
1,2-Dibromo-3-chloropropane	96-12-8		U	5.00	1.00
1,2-Dibromoethane	106-93-4		U	5.00	0.250
1,2-Dichlorobenzene	95-50-1		U	5.00	0.125
1,2-Dichloroethane	107-06-2		U	5.00	0.250
cis-1,2-Dichloroethene	156-59-2	0.594	J	10.0	0.250
trans-1,2-Dichloroethene	156-60-5		U	5.00	0.250
1,2-Dichloropropane	78-87-5		U	5.00	0.200
1,3-Dichlorobenzene	541-73-1		U	5.00	0.250
1,4-Dichlorobenzene	106-46-7		U	5.00	0.125
2-Butanone	78-93-3		U	10.0	2.50
2-Hexanone	591-78-6		U	10.0	2.50
4-Methyl-2-pentanone	108-10-1		U	10.0	2.50
Acetone	67-64-1		U	10.0	2.50
Benzene	71-43-2		U	5.00	0.125
Bromodichloromethane	75-27-4		U	5.00	0.250
Bromoform	75-25-2		U	5.00	0.500
Bromomethane	74-83-9		U	10.0	0.500
Carbon disulfide	75-15-0		U	5.00	0.500
Carbon tetrachloride	56-23-5		U	5.00	0.250
Chlorobenzene	108-90-7		U	5.00	0.125
Chloroethane	75-00-3		U	10.0	0.500
Chloroform	67-66-3		U	5.00	0.125
Chloromethane	74-87-3		U	10.0	0.250
cis-1,3-Dichloropropene	10061-01-5		U	5.00	0.250
Cyclohexane	110-82-7		U	10.0	0.250
Dibromochloromethane	124-48-1		U	5.00	0.250

Report Number: **L0612485**
Report Date : **January 3, 2007**

00095887

Sample Number: **L0612485-03**
Client ID: **12WW20**
Matrix: **Water**
Workgroup Number: **WG230324**
Collect Date: **12/19/2006 11:25**
Sample Tag: **01**

PrePrep Method: **NONE**
Prep Method: **5030B**
Analytical Method: **8260B**
Analyst: **CMS**
Dilution: **1**
Units: **ug/L**

Instrument: **HPMS11**
Prep Date: **12/27/2006 13:24**
Cal Date: **11/28/2006 12:56**
Run Date: **12/27/2006 13:24**
File ID: **11M39125**

Analyte	CAS. Number	Result	Qual	PQL	SQL
Dichlorodifluoromethane	75-71-8		U	10.0	0.250
Ethyl benzene	100-41-4		U	5.00	0.250
Isopropylbenzene	98-82-8		U	5.00	0.250
Methyl acetate	79-20-9		U	10.0	0.250
Methyl tert-butyl ether	1634-04-4		U	5.00	0.500
Methylcyclohexane	108-87-2		U	10.0	0.250
Methylene chloride	75-09-2		U	5.00	0.250
Styrene	100-42-5		U	5.00	0.125
Tetrachloroethene	127-18-4		U	5.00	0.250
Toluene	108-88-3		U	5.00	0.250
trans-1,3-Dichloropropene	10061-02-6		U	5.00	0.500
Trichloroethene	79-01-6	0.713	J	5.00	0.250
Trichlorofluoromethane	75-69-4		U	10.0	0.250
Vinyl chloride	75-01-4		U	10.0	0.250
Xylenes, Total	1330-20-7		U	5.00	0.500

Surrogate	% Recovery	Lower	Upper	Qual
1,2-Dichloroethane-d4	89.9	80	120	
Dibromofluoromethane	94.0	86	118	
p-Bromofluorobenzene	91.0	86	115	
Toluene-d8	92.6	88	110	

U Not detected at or above adjusted sample detection limit
J The analyte was positively identified, but the quantitation was below the RL

Sample Number: **L0612485-03**
Client ID: **12WW20**
Matrix: **Water**
Workgroup Number: **WG230208**
Collect Date: **12/19/2006 11:25**
Sample Tag: **01**

PrePrep Method: **NONE**
Prep Method: **415.1**
Analytical Method: **415.1**
Analyst: **DIH**
Dilution: **1**
Units: **mg/L**

Instrument: **TOC-VWP**
Prep Date: **12/26/2006 23:07**
Cal Date: **01/12/2006 10:36**
Run Date: **12/26/2006 23:07**
File ID: **TC12-26-2006.38**

Analyte	CAS. Number	Result	Qual	PQL	SQL
Total Inorganic Carbon		16.2		1.00	0.500

Report Number: **L0612485**
Report Date : **January 3, 2007**

00095888

Sample Number: **L0612485-03**
Client ID: **12WW20**
Matrix: **Water**
Workgroup Number: **WG230208**
Collect Date: **12/19/2006 11:25**
Sample Tag: **01**

PrePrep Method: **NONE**
Prep Method: **415.1**
Analytical Method: **415.1**
Analyst: **DIH**
Dilution: **1**
Units: **mg/L**

Instrument: **TOC-VWP**
Prep Date: **12/26/2006 23:07**
Cal Date: **01/12/2006 10:36**
Run Date: **12/26/2006 23:07**
File ID: **TC12-26-2006.38**

Analyte	CAS. Number	Result	Qual	PQL	SQL
Total Organic Carbon		4.52		1.00	0.500

Sample Number: **L0612485-03**
Client ID: **12WW20**
Matrix: **Water**
Workgroup Number: **WG230008**
Collect Date: **12/19/2006 11:25**
Sample Tag: **01**

PrePrep Method: **NONE**
Prep Method: **5021**
Analytical Method: **RSK175**
Analyst: **JLS**
Dilution: **1**
Units: **ug/L**

Instrument: **HP16**
Prep Date: **12/20/2006 18:18**
Cal Date: **09/27/2006 15:29**
Run Date: **12/20/2006 18:18**
File ID: **16G5688**

Analyte	CAS. Number	Result	Qual	PQL	SQL
methane	74-82-8	76.0		0.500	0.250
ethene	74-85-1	0.476	J	0.500	0.250
ethane	74-84-0		U	0.500	0.250

U Not detected at or above adjusted sample detection limit
J The analyte was positively identified, but the quantitation was below the RL

Sample Number: **L0612485-04**
Client ID: **12WW24**
Matrix: **Water**
Workgroup Number: **WG230345**
Collect Date: **12/19/2006 13:35**
Sample Tag: **DL01**

PrePrep Method: **NONE**
Prep Method: **415.1**
Analytical Method: **415.1**
Analyst: **DIH**
Dilution: **2**
Units: **mg/L**

Instrument: **TOC-VWP**
Prep Date: **12/27/2006 12:55**
Cal Date: **01/12/2006 10:36**
Run Date: **12/27/2006 12:55**
File ID: **TC12-27-2006.08**

Analyte	CAS. Number	Result	Qual	PQL	SQL
Total Inorganic Carbon		71.3		2.00	1.00

Sample Number: **L0612485-04**
Client ID: **12WW24**
Matrix: **Water**
Workgroup Number: **WG230345**
Collect Date: **12/19/2006 13:35**
Sample Tag: **DL01**

PrePrep Method: **NONE**
Prep Method: **415.1**
Analytical Method: **415.1**
Analyst: **DIH**
Dilution: **2**
Units: **mg/L**

Instrument: **TOC-VWP**
Prep Date: **12/27/2006 12:55**
Cal Date: **01/12/2006 10:36**
Run Date: **12/27/2006 12:55**
File ID: **TC12-27-2006.08**

Analyte	CAS. Number	Result	Qual	PQL	SQL
Total Organic Carbon		18.8		2.00	1.00

Report Number: **L0612485**
Report Date : **January 3, 2007**

00095889

Sample Number: **L0612485-04**
Client ID: **12WW24**
Matrix: **Water**
Workgroup Number: **WG230324**
Collect Date: **12/19/2006 13:35**
Sample Tag: **01**

PrePrep Method: **NONE**
Prep Method: **5030B**
Analytical Method: **8260B**
Analyst: **CMS**
Dilution: **1**
Units: **ug/L**

Instrument: **HPMS11**
Prep Date: **12/27/2006 13:55**
Cal Date: **11/28/2006 12:56**
Run Date: **12/27/2006 13:55**
File ID: **11M39126**

Analyte	CAS. Number	Result	Qual	PQL	SQL
1,1,1-Trichloroethane	71-55-6		U	5.00	0.250
1,1,2,2-Tetrachloroethane	79-34-5		U	5.00	0.125
1,1,2-Trichloro-1,2,2-Trifluoroethane	76-13-1		U	10.0	0.250
1,1,2-Trichloroethane	79-00-5		U	5.00	0.250
1,1-Dichloroethane	75-34-3	1.31	J	5.00	0.125
1,1-Dichloroethene	75-35-4	0.945	J	5.00	0.500
1,2,4-Trichlorobenzene	120-82-1		U	5.00	0.200
1,2-Dibromo-3-chloropropane	96-12-8		U	5.00	1.00
1,2-Dibromoethane	106-93-4		U	5.00	0.250
1,2-Dichlorobenzene	95-50-1		U	5.00	0.125
1,2-Dichloroethane	107-06-2		U	5.00	0.250
cis-1,2-Dichloroethene	156-59-2	113		10.0	0.250
trans-1,2-Dichloroethene	156-60-5	0.425	J	5.00	0.250
1,2-Dichloropropane	78-87-5		U	5.00	0.200
1,3-Dichlorobenzene	541-73-1		U	5.00	0.250
1,4-Dichlorobenzene	106-46-7	5.10		5.00	0.125
2-Butanone	78-93-3		U	10.0	2.50
2-Hexanone	591-78-6		U	10.0	2.50
4-Methyl-2-pentanone	108-10-1		U	10.0	2.50
Acetone	67-64-1		U	10.0	2.50
Benzene	71-43-2	1.11	J	5.00	0.125
Bromodichloromethane	75-27-4		U	5.00	0.250
Bromoform	75-25-2		U	5.00	0.500
Bromomethane	74-83-9		U	10.0	0.500
Carbon disulfide	75-15-0		U	5.00	0.500
Carbon tetrachloride	56-23-5		U	5.00	0.250
Chlorobenzene	108-90-7	15.2		5.00	0.125
Chloroethane	75-00-3		U	10.0	0.500
Chloroform	67-66-3	0.807	J	5.00	0.125
Chloromethane	74-87-3		U	10.0	0.250
cis-1,3-Dichloropropene	10061-01-5		U	5.00	0.250
Cyclohexane	110-82-7		U	10.0	0.250
Dibromochloromethane	124-48-1		U	5.00	0.250
Dichlorodifluoromethane	75-71-8		U	10.0	0.250
Ethyl benzene	100-41-4		U	5.00	0.250
Isopropylbenzene	98-82-8	0.352	J	5.00	0.250
Methyl acetate	79-20-9		U	10.0	0.250
Methyl tert-butyl ether	1634-04-4		U	5.00	0.500
Methylcyclohexane	108-87-2		U	10.0	0.250
Methylene chloride	75-09-2		U	5.00	0.250
Styrene	100-42-5		U	5.00	0.125
Tetrachloroethene	127-18-4	1.12	J	5.00	0.250
Toluene	108-88-3		U	5.00	0.250
trans-1,3-Dichloropropene	10061-02-6		U	5.00	0.500
Trichloroethene	79-01-6	412	I	5.00	0.250
Trichlorofluoromethane	75-69-4		U	10.0	0.250
Vinyl chloride	75-01-4	5.35	J	10.0	0.250
Xylenes, Total	1330-20-7		U	5.00	0.500

Sample Number: **L0612485-04**
Client ID: **12WW24**
Matrix: **Water**
Workgroup Number: **WG230324**
Collect Date: **12/19/2006 13:35**
Sample Tag: **01**

PrePrep Method: **NONE**
Prep Method: **5030B**
Analytical Method: **8260B**
Analyst: **CMS**
Dilution: **1**
Units: **ug/L**

Instrument: **HPMS11**
Prep Date: **12/27/2006 13:55**
Cal Date: **11/28/2006 12:56**
Run Date: **12/27/2006 13:55**
File ID: **11M39126**

Surrogate	% Recovery	Lower	Upper	Qual
1,2-Dichloroethane-d4	91.3	80	120	
Dibromofluoromethane	95.6	86	118	
p-Bromofluorobenzene	91.1	86	115	
Toluene-d8	95.6	88	110	

U Not detected at or above adjusted sample detection limit
J The analyte was positively identified, but the quantitation was below the RL
I Semiquantitative result (out of instrument calibration range)

Sample Number: **L0612485-04**
Client ID: **12WW24**
Matrix: **Water**
Workgroup Number: **WG230417**
Collect Date: **12/19/2006 13:35**
Sample Tag: **DL01**

PrePrep Method: **NONE**
Prep Method: **5030B**
Analytical Method: **8260B**
Analyst: **CMS**
Dilution: **10**
Units: **ug/L**

Instrument: **HPMS11**
Prep Date: **12/28/2006 10:13**
Cal Date: **11/28/2006 12:56**
Run Date: **12/28/2006 10:13**
File ID: **11M39147**

Analyte	CAS. Number	Result	Qual	PQL	SQL
1,1,1-Trichloroethane	71-55-6		U	50.0	2.50
1,1,2,2-Tetrachloroethane	79-34-5		U	50.0	1.25
1,1,2-Trichloro-1,2,2-Trifluoroethane	76-13-1		U	100	2.50
1,1,2-Trichloroethane	79-00-5		U	50.0	2.50
1,1-Dichloroethane	75-34-3		U	50.0	1.25
1,1-Dichloroethene	75-35-4		U	50.0	5.00
1,2,4-Trichlorobenzene	120-82-1		U	50.0	2.00
1,2-Dibromo-3-chloropropane	96-12-8		U	50.0	10.0
1,2-Dibromoethane	106-93-4		U	50.0	2.50
1,2-Dichlorobenzene	95-50-1		U	50.0	1.25
1,2-Dichloroethane	107-06-2		U	50.0	2.50
cis-1,2-Dichloroethene	156-59-2	97.5	J	100	2.50
trans-1,2-Dichloroethene	156-60-5		U	50.0	2.50
1,2-Dichloropropane	78-87-5		U	50.0	2.00
1,3-Dichlorobenzene	541-73-1		U	50.0	2.50
1,4-Dichlorobenzene	106-46-7	4.70	J	50.0	1.25
2-Butanone	78-93-3		U	100	25.0
2-Hexanone	591-78-6		U	100	25.0
4-Methyl-2-pentanone	108-10-1		U	100	25.0
Acetone	67-64-1		U	100	25.0
Benzene	71-43-2		U	50.0	1.25
Bromodichloromethane	75-27-4		U	50.0	2.50
Bromoform	75-25-2		U	50.0	5.00
Bromomethane	74-83-9		U	100	5.00
Carbon disulfide	75-15-0		U	50.0	5.00
Carbon tetrachloride	56-23-5		U	50.0	2.50
Chlorobenzene	108-90-7	13.6	J	50.0	1.25
Chloroethane	75-00-3		U	100	5.00
Chloroform	67-66-3		U	50.0	1.25
Chloromethane	74-87-3		U	100	2.50
cis-1,3-Dichloropropene	10061-01-5		U	50.0	2.50
Cyclohexane	110-82-7		U	100	2.50

Sample Number: **L0612485-04**
Client ID: **12WW24**
Matrix: **Water**
Workgroup Number: **WG230417**
Collect Date: **12/19/2006 13:35**
Sample Tag: **DL01**

PrePrep Method: **NONE**
Prep Method: **5030B**
Analytical Method: **8260B**
Analyst: **CMS**
Dilution: **10**
Units: **ug/L**

Instrument: **HPMS11**
Prep Date: **12/28/2006 10:13**
Cal Date: **11/28/2006 12:56**
Run Date: **12/28/2006 10:13**
File ID: **11M39147**

Analyte	CAS. Number	Result	Qual	PQL	SQL
Dibromochloromethane	124-48-1		U	50.0	2.50
Dichlorodifluoromethane	75-71-8		U	100	2.50
Ethyl benzene	100-41-4		U	50.0	2.50
Isopropylbenzene	98-82-8		U	50.0	2.50
Methyl acetate	79-20-9		U	100	2.50
Methyl tert-butyl ether	1634-04-4		U	50.0	5.00
Methylcyclohexane	108-87-2		U	100	2.50
Methylene chloride	75-09-2		U	50.0	2.50
Styrene	100-42-5		U	50.0	1.25
Tetrachloroethene	127-18-4		U	50.0	2.50
Toluene	108-88-3		U	50.0	2.50
trans-1,3-Dichloropropene	10061-02-6		U	50.0	5.00
Trichloroethene	79-01-6	396		50.0	2.50
Trichlorofluoromethane	75-69-4		U	100	2.50
Vinyl chloride	75-01-4	8.24	J	100	2.50
Xylenes, Total	1330-20-7		U	50.0	5.00

Surrogate	% Recovery	Lower	Upper	Qual
1,2-Dichloroethane-d4	91.2	80	120	
Dibromofluoromethane	95.3	86	118	
p-Bromofluorobenzene	90.4	86	115	
Toluene-d8	92.7	88	110	

U Not detected at or above adjusted sample detection limit
J The analyte was positively identified, but the quantitation was below the RL

Sample Number: **L0612485-04**
Client ID: **12WW24**
Matrix: **Water**
Workgroup Number: **WG230008**
Collect Date: **12/19/2006 13:35**
Sample Tag: **01**

PrePrep Method: **NONE**
Prep Method: **5021**
Analytical Method: **RSK175**
Analyst: **JLS**
Dilution: **1**
Units: **ug/L**

Instrument: **HP16**
Prep Date: **12/20/2006 18:46**
Cal Date: **09/27/2006 15:29**
Run Date: **12/20/2006 18:46**
File ID: **16G5690**

Analyte	CAS. Number	Result	Qual	PQL	SQL
methane	74-82-8	14.0		0.500	0.250
ethene	74-85-1	0.382	J	0.500	0.250
ethane	74-84-0	0.394	J	0.500	0.250

J The analyte was positively identified, but the quantitation was below the RL

Sample Number: **L0612485-04**
Client ID: **12WW24**
Matrix: **Water**
Workgroup Number: **WG230107**
Collect Date: **12/19/2006 13:35**
Sample Tag: **DL02**

PrePrep Method: **NONE**
Prep Method: **300.0**
Analytical Method: **300.0**
Analyst: **JWR**
Dilution: **2**
Units: **mg/L**

Instrument: **IC2**
Prep Date: **12/20/2006 18:34**
Cal Date: **12/08/2006 18:15**
Run Date: **12/20/2006 18:34**
File ID: **I2122006.32**

Analyte	CAS. Number	Result	Qual	PQL	SQL
Chloride	16887-00-6	234	I	0.400	0.200
Nitrate	14797-55-8	0.386	J	1.20	0.200
Nitrite	14797-65-0		U	0.800	0.200
Sulfate	14808-79-8	201	I	2.00	1.00

J The analyte was positively identified, but the quantitation was below the RL
U Not detected at or above adjusted sample detection limit
I Semiquantitative result (out of instrument calibration range)

Sample Number: **L0612485-04**
Client ID: **12WW24**
Matrix: **Water**
Workgroup Number: **WG230107**
Collect Date: **12/19/2006 13:35**
Sample Tag: **DL03**

PrePrep Method: **NONE**
Prep Method: **300.0**
Analytical Method: **300.0**
Analyst: **JWR**
Dilution: **40**
Units: **mg/L**

Instrument: **IC2**
Prep Date: **12/20/2006 18:51**
Cal Date: **12/08/2006 18:15**
Run Date: **12/20/2006 18:51**
File ID: **I2122006.33**

Analyte	CAS. Number	Result	Qual	PQL	SQL
Chloride	16887-00-6	310		8.00	4.00
Nitrate	14797-55-8		U	24.0	4.00
Nitrite	14797-65-0		U	16.0	4.00
Sulfate	14808-79-8	208		40.0	20.0

U Not detected at or above adjusted sample detection limit

Sample Number: **L0612485-04**
Client ID: **12WW24**
Matrix: **Water**
Workgroup Number: **WG230107**
Collect Date: **12/19/2006 13:35**
Sample Tag: **DL01**

PrePrep Method: **NONE**
Prep Method: **300.0**
Analytical Method: **300.0**
Analyst: **JWR**
Dilution: **10**
Units: **mg/L**

Instrument: **IC2**
Prep Date: **12/20/2006 14:30**
Cal Date: **12/08/2006 18:15**
Run Date: **12/20/2006 14:30**
File ID: **I2122006.18**

Analyte	CAS. Number	Result	Qual	PQL	SQL
Chloride	16887-00-6	296	I	2.00	1.00
Nitrate	14797-55-8		U	6.00	1.00
Nitrite	14797-65-0		U	4.00	1.00
Sulfate	14808-79-8	207		10.0	5.00

U Not detected at or above adjusted sample detection limit
I Semiquantitative result (out of instrument calibration range)

Sample Number: **L0612485-05**
Client ID: **12WW05**
Matrix: **Water**
Workgroup Number: **WG230208**
Collect Date: **12/19/2006 08:45**
Sample Tag: **01**

PrePrep Method: **NONE**
Prep Method: **415.1**
Analytical Method: **415.1**
Analyst: **DIH**
Dilution: **1**
Units: **mg/L**

Instrument: **TOC-VWP**
Prep Date: **12/27/2006 00:02**
Cal Date: **01/12/2006 10:36**
Run Date: **12/27/2006 00:02**
File ID: **TC12-26-2006.42**

Analyte	CAS. Number	Result	Qual	PQL	SQL
Total Inorganic Carbon		22.1		1.00	0.500

Report Number: **L0612485**
Report Date : **January 3, 2007**

00095893

Sample Number: **L0612485-05**
Client ID: **12WW05**
Matrix: **Water**
Workgroup Number: **WG230208**
Collect Date: **12/19/2006 08:45**
Sample Tag: **01**

PrePrep Method: **NONE**
Prep Method: **415.1**
Analytical Method: **415.1**
Analyst: **DIH**
Dilution: **1**
Units: **mg/L**

Instrument: **TOC-VWP**
Prep Date: **12/27/2006 00:02**
Cal Date: **01/12/2006 10:36**
Run Date: **12/27/2006 00:02**
File ID: **TC12-26-2006.42**

Analyte	CAS. Number	Result	Qual	PQL	SQL
Total Organic Carbon		4.67		1.00	0.500

Sample Number: **L0612485-05**
Client ID: **12WW05**
Matrix: **Water**
Workgroup Number: **WG230107**
Collect Date: **12/19/2006 08:45**
Sample Tag: **DL02**

PrePrep Method: **NONE**
Prep Method: **300.0**
Analytical Method: **300.0**
Analyst: **JWR**
Dilution: **4**
Units: **mg/L**

Instrument: **IC2**
Prep Date: **12/20/2006 19:43**
Cal Date: **12/08/2006 18:15**
Run Date: **12/20/2006 19:43**
File ID: **I2122006.36**

Analyte	CAS. Number	Result	Qual	PQL	SQL
Chloride	16887-00-6	553	I	0.800	0.400
Nitrate	14797-55-8		U	2.40	0.400
Nitrite	14797-65-0		U	1.60	0.400
Sulfate	14808-79-8	291	I	4.00	2.00

U Not detected at or above adjusted sample detection limit
I Semiquantitative result (out of instrument calibration range)

Sample Number: **L0612485-05**
Client ID: **12WW05**
Matrix: **Water**
Workgroup Number: **WG230107**
Collect Date: **12/19/2006 08:45**
Sample Tag: **DL03**

PrePrep Method: **NONE**
Prep Method: **300.0**
Analytical Method: **300.0**
Analyst: **JWR**
Dilution: **100**
Units: **mg/L**

Instrument: **IC2**
Prep Date: **12/20/2006 20:01**
Cal Date: **12/08/2006 18:15**
Run Date: **12/20/2006 20:01**
File ID: **I2122006.37**

Analyte	CAS. Number	Result	Qual	PQL	SQL
Chloride	16887-00-6	747		20.0	10.0
Nitrate	14797-55-8		U	60.0	10.0
Nitrite	14797-65-0		U	40.0	10.0
Sulfate	14808-79-8	266		100	50.0

U Not detected at or above adjusted sample detection limit

Sample Number: **L0612485-05**
Client ID: **12WW05**
Matrix: **Water**
Workgroup Number: **WG230107**
Collect Date: **12/19/2006 08:45**
Sample Tag: **DL01**

PrePrep Method: **NONE**
Prep Method: **300.0**
Analytical Method: **300.0**
Analyst: **JWR**
Dilution: **10**
Units: **mg/L**

Instrument: **IC2**
Prep Date: **12/20/2006 14:48**
Cal Date: **12/08/2006 18:15**
Run Date: **12/20/2006 14:48**
File ID: **I2122006.19**

Analyte	CAS. Number	Result	Qual	PQL	SQL
Chloride	16887-00-6	663	I	2.00	1.00
Nitrate	14797-55-8		U	6.00	1.00
Nitrite	14797-65-0		U	4.00	1.00
Sulfate	14808-79-8	281		10.0	5.00

U Not detected at or above adjusted sample detection limit
I Semiquantitative result (out of instrument calibration range)

Report Number: **L0612485**
Report Date : **January 3, 2007**

00095894

Sample Number: **L0612485-05**
Client ID: **12WW05**
Matrix: **Water**
Workgroup Number: **WG230324**
Collect Date: **12/19/2006 08:45**
Sample Tag: **01**

PrePrep Method: **NONE**
Prep Method: **5030B**
Analytical Method: **8260B**
Analyst: **CMS**
Dilution: **1**
Units: **ug/L**

Instrument: **HPMS11**
Prep Date: **12/27/2006 14:26**
Cal Date: **11/28/2006 12:56**
Run Date: **12/27/2006 14:26**
File ID: **11M39127**

Analyte	CAS. Number	Result	Qual	PQL	SQL
1,1,1-Trichloroethane	71-55-6		U	5.00	0.250
1,1,2,2-Tetrachloroethane	79-34-5		U	5.00	0.125
1,1,2-Trichloro-1,2,2-Trifluoroethane	76-13-1		U	10.0	0.250
1,1,2-Trichloroethane	79-00-5		U	5.00	0.250
1,1-Dichloroethane	75-34-3		U	5.00	0.125
1,1-Dichloroethene	75-35-4		U	5.00	0.500
1,2,4-Trichlorobenzene	120-82-1		U	5.00	0.200
1,2-Dibromo-3-chloropropane	96-12-8		U	5.00	1.00
1,2-Dibromoethane	106-93-4		U	5.00	0.250
1,2-Dichlorobenzene	95-50-1		U	5.00	0.125
1,2-Dichloroethane	107-06-2		U	5.00	0.250
cis-1,2-Dichloroethene	156-59-2		U	10.0	0.250
trans-1,2-Dichloroethene	156-60-5		U	5.00	0.250
1,2-Dichloropropane	78-87-5		U	5.00	0.200
1,3-Dichlorobenzene	541-73-1		U	5.00	0.250
1,4-Dichlorobenzene	106-46-7		U	5.00	0.125
2-Butanone	78-93-3		U	10.0	2.50
2-Hexanone	591-78-6		U	10.0	2.50
4-Methyl-2-pentanone	108-10-1		U	10.0	2.50
Acetone	67-64-1		U	10.0	2.50
Benzene	71-43-2		U	5.00	0.125
Bromodichloromethane	75-27-4		U	5.00	0.250
Bromoform	75-25-2		U	5.00	0.500
Bromomethane	74-83-9		U	10.0	0.500
Carbon disulfide	75-15-0		U	5.00	0.500
Carbon tetrachloride	56-23-5		U	5.00	0.250
Chlorobenzene	108-90-7		U	5.00	0.125
Chloroethane	75-00-3		U	10.0	0.500
Chloroform	67-66-3		U	5.00	0.125
Chloromethane	74-87-3		U	10.0	0.250
cis-1,3-Dichloropropene	10061-01-5		U	5.00	0.250
Cyclohexane	110-82-7		U	10.0	0.250
Dibromochloromethane	124-48-1		U	5.00	0.250
Dichlorodifluoromethane	75-71-8		U	10.0	0.250
Ethyl benzene	100-41-4		U	5.00	0.250
Isopropylbenzene	98-82-8		U	5.00	0.250
Methyl acetate	79-20-9		U	10.0	0.250
Methyl tert-butyl ether	1634-04-4		U	5.00	0.500
Methylcyclohexane	108-87-2		U	10.0	0.250
Methylene chloride	75-09-2		U	5.00	0.250
Styrene	100-42-5		U	5.00	0.125
Tetrachloroethene	127-18-4		U	5.00	0.250
Toluene	108-88-3		U	5.00	0.250
trans-1,3-Dichloropropene	10061-02-6		U	5.00	0.500
Trichloroethene	79-01-6		U	5.00	0.250
Trichlorofluoromethane	75-69-4		U	10.0	0.250
Vinyl chloride	75-01-4		U	10.0	0.250
Xylenes, Total	1330-20-7		U	5.00	0.500

Sample Number: **L0612485-05**
Client ID: **12WW05**
Matrix: **Water**
Workgroup Number: **WG230324**
Collect Date: **12/19/2006 08:45**
Sample Tag: **01**

PrePrep Method: **NONE**
Prep Method: **5030B**
Analytical Method: **8260B**
Analyst: **CMS**
Dilution: **1**
Units: **ug/L**

Instrument: **HPMS11**
Prep Date: **12/27/2006 14:26**
Cal Date: **11/28/2006 12:56**
Run Date: **12/27/2006 14:26**
File ID: **11M39127**

Surrogate	% Recovery	Lower	Upper	Qual
1,2-Dichloroethane-d4	91.9	80	120	
Dibromofluoromethane	95.3	86	118	
p-Bromofluorobenzene	90.7	86	115	
Toluene-d8	92.9	88	110	

U Not detected at or above adjusted sample detection limit

Sample Number: **L0612485-05**
Client ID: **12WW05**
Matrix: **Water**
Workgroup Number: **WG230008**
Collect Date: **12/19/2006 08:45**
Sample Tag: **01**

PrePrep Method: **NONE**
Prep Method: **5021**
Analytical Method: **RSK175**
Analyst: **JLS**
Dilution: **1**
Units: **ug/L**

Instrument: **HP16**
Prep Date: **12/20/2006 19:00**
Cal Date: **09/27/2006 15:29**
Run Date: **12/20/2006 19:00**
File ID: **16G5691**

Analyte	CAS. Number	Result	Qual	PQL	SQL
methane	74-82-8	1.95		0.500	0.250
ethene	74-85-1		U	0.500	0.250
ethane	74-84-0		U	0.500	0.250

U Not detected at or above adjusted sample detection limit

Sample Number: **L0612485-06**
Client ID: **12WW24-QC**
Matrix: **Water**
Workgroup Number: **WG230008**
Collect Date: **12/19/2006 13:35**
Sample Tag: **01**

PrePrep Method: **NONE**
Prep Method: **5021**
Analytical Method: **RSK175**
Analyst: **JLS**
Dilution: **1**
Units: **ug/L**

Instrument: **HP16**
Prep Date: **12/20/2006 19:14**
Cal Date: **09/27/2006 15:29**
Run Date: **12/20/2006 19:14**
File ID: **16G5692**

Analyte	CAS. Number	Result	Qual	PQL	SQL
methane	74-82-8	15.9		0.500	0.250
ethene	74-85-1	0.482	J	0.500	0.250
ethane	74-84-0	0.400	J	0.500	0.250

J The analyte was positively identified, but the quantitation was below the RL

Sample Number: **L0612485-06**
Client ID: **12WW24-QC**
Matrix: **Water**
Workgroup Number: **WG230345**
Collect Date: **12/19/2006 13:35**
Sample Tag: **DL01**

PrePrep Method: **NONE**
Prep Method: **415.1**
Analytical Method: **415.1**
Analyst: **DIH**
Dilution: **2**
Units: **mg/L**

Instrument: **TOC-VWP**
Prep Date: **12/27/2006 13:10**
Cal Date: **01/12/2006 10:36**
Run Date: **12/27/2006 13:10**
File ID: **TC12-27-2006.09**

Analyte	CAS. Number	Result	Qual	PQL	SQL
Total Inorganic Carbon		64.0		2.00	1.00

Report Number: **L0612485**
Report Date : **January 3, 2007**

00095896

Sample Number: **L0612485-06**
Client ID: **12WW24-QC**
Matrix: **Water**
Workgroup Number: **WG230345**
Collect Date: **12/19/2006 13:35**
Sample Tag: **DL01**

PrePrep Method: **NONE**
Prep Method: **415.1**
Analytical Method: **415.1**
Analyst: **DIH**
Dilution: **2**
Units: **mg/L**

Instrument: **TOC-VWP**
Prep Date: **12/27/2006 13:10**
Cal Date: **01/12/2006 10:36**
Run Date: **12/27/2006 13:10**
File ID: **TC12-27-2006.09**

Analyte	CAS. Number	Result	Qual	PQL	SQL
Total Organic Carbon		22.5		2.00	1.00

Sample Number: **L0612485-06**
Client ID: **12WW24-QC**
Matrix: **Water**
Workgroup Number: **WG230107**
Collect Date: **12/19/2006 13:35**
Sample Tag: **DL01**

PrePrep Method: **NONE**
Prep Method: **300.0**
Analytical Method: **300.0**
Analyst: **JWR**
Dilution: **10**
Units: **mg/L**

Instrument: **IC2**
Prep Date: **12/20/2006 15:05**
Cal Date: **12/08/2006 18:15**
Run Date: **12/20/2006 15:05**
File ID: **I2122006.20**

Analyte	CAS. Number	Result	Qual	PQL	SQL
Chloride	16887-00-6	292	I	2.00	1.00
Nitrate	14797-55-8		U	6.00	1.00
Nitrite	14797-65-0		U	4.00	1.00
Sulfate	14808-79-8	179		10.0	5.00

U Not detected at or above adjusted sample detection limit
I Semiquantitative result (out of instrument calibration range)

Sample Number: **L0612485-06**
Client ID: **12WW24-QC**
Matrix: **Water**
Workgroup Number: **WG230107**
Collect Date: **12/19/2006 13:35**
Sample Tag: **DL02**

PrePrep Method: **NONE**
Prep Method: **300.0**
Analytical Method: **300.0**
Analyst: **JWR**
Dilution: **2**
Units: **mg/L**

Instrument: **IC2**
Prep Date: **12/20/2006 20:18**
Cal Date: **12/08/2006 18:15**
Run Date: **12/20/2006 20:18**
File ID: **I2122006.38**

Analyte	CAS. Number	Result	Qual	PQL	SQL
Chloride	16887-00-6	235	I	0.400	0.200
Nitrate	14797-55-8	0.364	J	1.20	0.200
Nitrite	14797-65-0		U	0.800	0.200
Sulfate	14808-79-8	177	I	2.00	1.00

J The analyte was positively identified, but the quantitation was below the RL
U Not detected at or above adjusted sample detection limit
I Semiquantitative result (out of instrument calibration range)

Sample Number: **L0612485-06**
Client ID: **12WW24-QC**
Matrix: **Water**
Workgroup Number: **WG230107**
Collect Date: **12/19/2006 13:35**
Sample Tag: **DL03**

PrePrep Method: **NONE**
Prep Method: **300.0**
Analytical Method: **300.0**
Analyst: **JWR**
Dilution: **40**
Units: **mg/L**

Instrument: **IC2**
Prep Date: **12/20/2006 20:36**
Cal Date: **12/08/2006 18:15**
Run Date: **12/20/2006 20:36**
File ID: **I2122006.39**

Analyte	CAS. Number	Result	Qual	PQL	SQL
Chloride	16887-00-6	301		8.00	4.00
Nitrate	14797-55-8		U	24.0	4.00
Nitrite	14797-65-0		U	16.0	4.00
Sulfate	14808-79-8	187		40.0	20.0

U Not detected at or above adjusted sample detection limit

Report Number: **L0612485**
Report Date : **January 3, 2007**

00095897

Sample Number: **L0612485-06**
Client ID: **12WW24-QC**
Matrix: **Water**
Workgroup Number: **WG230324**
Collect Date: **12/19/2006 13:35**
Sample Tag: **01**

PrePrep Method: **NONE**
Prep Method: **5030B**
Analytical Method: **8260B**
Analyst: **CMS**
Dilution: **1**
Units: **ug/L**

Instrument: **HPMS11**
Prep Date: **12/27/2006 14:57**
Cal Date: **11/28/2006 12:56**
Run Date: **12/27/2006 14:57**
File ID: **11M39128**

Analyte	CAS. Number	Result	Qual	PQL	SQL
1,1,1-Trichloroethane	71-55-6		U	5.00	0.250
1,1,2,2-Tetrachloroethane	79-34-5		U	5.00	0.125
1,1,2-Trichloro-1,2,2-Trifluoroethane	76-13-1		U	10.0	0.250
1,1,2-Trichloroethane	79-00-5		U	5.00	0.250
1,1-Dichloroethane	75-34-3	1.33	J	5.00	0.125
1,1-Dichloroethene	75-35-4	0.973	J	5.00	0.500
1,2,4-Trichlorobenzene	120-82-1		U	5.00	0.200
1,2-Dibromo-3-chloropropane	96-12-8		U	5.00	1.00
1,2-Dibromoethane	106-93-4		U	5.00	0.250
1,2-Dichlorobenzene	95-50-1		U	5.00	0.125
1,2-Dichloroethane	107-06-2	0.252	J	5.00	0.250
cis-1,2-Dichloroethene	156-59-2	115		10.0	0.250
trans-1,2-Dichloroethene	156-60-5	0.457	J	5.00	0.250
1,2-Dichloropropane	78-87-5		U	5.00	0.200
1,3-Dichlorobenzene	541-73-1		U	5.00	0.250
1,4-Dichlorobenzene	106-46-7	5.15		5.00	0.125
2-Butanone	78-93-3		U	10.0	2.50
2-Hexanone	591-78-6		U	10.0	2.50
4-Methyl-2-pentanone	108-10-1		U	10.0	2.50
Acetone	67-64-1		U	10.0	2.50
Benzene	71-43-2	1.12	J	5.00	0.125
Bromodichloromethane	75-27-4		U	5.00	0.250
Bromoform	75-25-2		U	5.00	0.500
Bromomethane	74-83-9		U	10.0	0.500
Carbon disulfide	75-15-0		U	5.00	0.500
Carbon tetrachloride	56-23-5		U	5.00	0.250
Chlorobenzene	108-90-7	15.5		5.00	0.125
Chloroethane	75-00-3		U	10.0	0.500
Chloroform	67-66-3	0.799	J	5.00	0.125
Chloromethane	74-87-3		U	10.0	0.250
cis-1,3-Dichloropropene	10061-01-5		U	5.00	0.250
Cyclohexane	110-82-7		U	10.0	0.250
Dibromochloromethane	124-48-1		U	5.00	0.250
Dichlorodifluoromethane	75-71-8		U	10.0	0.250
Ethyl benzene	100-41-4		U	5.00	0.250
Isopropylbenzene	98-82-8	0.335	J	5.00	0.250
Methyl acetate	79-20-9		U	10.0	0.250
Methyl tert-butyl ether	1634-04-4		U	5.00	0.500
Methylcyclohexane	108-87-2		U	10.0	0.250
Methylene chloride	75-09-2		U	5.00	0.250
Styrene	100-42-5		U	5.00	0.125
Tetrachloroethene	127-18-4	1.09	J	5.00	0.250
Toluene	108-88-3		U	5.00	0.250
trans-1,3-Dichloropropene	10061-02-6		U	5.00	0.500
Trichloroethene	79-01-6	422	I	5.00	0.250
Trichlorofluoromethane	75-69-4		U	10.0	0.250
Vinyl chloride	75-01-4	5.54	J	10.0	0.250
Xylenes, Total	1330-20-7		U	5.00	0.500

Sample Number: **L0612485-06**
Client ID: **12WW24-QC**
Matrix: **Water**
Workgroup Number: **WG230324**
Collect Date: **12/19/2006 13:35**
Sample Tag: **01**

PrePrep Method: **NONE**
Prep Method: **5030B**
Analytical Method: **8260B**
Analyst: **CMS**
Dilution: **1**
Units: **ug/L**

Instrument: **HPMS11**
Prep Date: **12/27/2006 14:57**
Cal Date: **11/28/2006 12:56**
Run Date: **12/27/2006 14:57**
File ID: **11M39128**

Surrogate	% Recovery	Lower	Upper	Qual
1,2-Dichloroethane-d4	92.9	80	120	
Dibromofluoromethane	97.5	86	118	
p-Bromofluorobenzene	92.4	86	115	
Toluene-d8	95.2	88	110	

U Not detected at or above adjusted sample detection limit
J The analyte was positively identified, but the quantitation was below the RL
I Semiquantitative result (out of instrument calibration range)

Sample Number: **L0612485-06**
Client ID: **12WW24-QC**
Matrix: **Water**
Workgroup Number: **WG230417**
Collect Date: **12/19/2006 13:35**
Sample Tag: **DL01**

PrePrep Method: **NONE**
Prep Method: **5030B**
Analytical Method: **8260B**
Analyst: **CMS**
Dilution: **10**
Units: **ug/L**

Instrument: **HPMS11**
Prep Date: **12/28/2006 10:43**
Cal Date: **11/28/2006 12:56**
Run Date: **12/28/2006 10:43**
File ID: **11M39148**

Analyte	CAS. Number	Result	Qual	PQL	SQL
1,1,1-Trichloroethane	71-55-6		U	50.0	2.50
1,1,2,2-Tetrachloroethane	79-34-5		U	50.0	1.25
1,1,2-Trichloro-1,2,2-Trifluoroethane	76-13-1		U	100	2.50
1,1,2-Trichloroethane	79-00-5		U	50.0	2.50
1,1-Dichloroethane	75-34-3		U	50.0	1.25
1,1-Dichloroethene	75-35-4		U	50.0	5.00
1,2,4-Trichlorobenzene	120-82-1		U	50.0	2.00
1,2-Dibromo-3-chloropropane	96-12-8		U	50.0	10.0
1,2-Dibromoethane	106-93-4		U	50.0	2.50
1,2-Dichlorobenzene	95-50-1		U	50.0	1.25
1,2-Dichloroethane	107-06-2		U	50.0	2.50
cis-1,2-Dichloroethene	156-59-2	98.3	J	100	2.50
trans-1,2-Dichloroethene	156-60-5		U	50.0	2.50
1,2-Dichloropropane	78-87-5		U	50.0	2.00
1,3-Dichlorobenzene	541-73-1		U	50.0	2.50
1,4-Dichlorobenzene	106-46-7	5.12	J	50.0	1.25
2-Butanone	78-93-3		U	100	25.0
2-Hexanone	591-78-6		U	100	25.0
4-Methyl-2-pentanone	108-10-1		U	100	25.0
Acetone	67-64-1		U	100	25.0
Benzene	71-43-2		U	50.0	1.25
Bromodichloromethane	75-27-4		U	50.0	2.50
Bromoform	75-25-2		U	50.0	5.00
Bromomethane	74-83-9		U	100	5.00
Carbon disulfide	75-15-0		U	50.0	5.00
Carbon tetrachloride	56-23-5		U	50.0	2.50
Chlorobenzene	108-90-7	14.1	J	50.0	1.25
Chloroethane	75-00-3		U	100	5.00
Chloroform	67-66-3		U	50.0	1.25
Chloromethane	74-87-3		U	100	2.50
cis-1,3-Dichloropropene	10061-01-5		U	50.0	2.50
Cyclohexane	110-82-7		U	100	2.50

Sample Number: **L0612485-06**
Client ID: **12WW24-QC**
Matrix: **Water**
Workgroup Number: **WG230417**
Collect Date: **12/19/2006 13:35**
Sample Tag: **DL01**

PrePrep Method: **NONE**
Prep Method: **5030B**
Analytical Method: **8260B**
Analyst: **CMS**
Dilution: **10**
Units: **ug/L**

Instrument: **HPMS11**
Prep Date: **12/28/2006 10:43**
Cal Date: **11/28/2006 12:56**
Run Date: **12/28/2006 10:43**
File ID: **11M39148**

Analyte	CAS. Number	Result	Qual	PQL	SQL
Dibromochloromethane	124-48-1		U	50.0	2.50
Dichlorodifluoromethane	75-71-8		U	100	2.50
Ethyl benzene	100-41-4		U	50.0	2.50
Isopropylbenzene	98-82-8		U	50.0	2.50
Methyl acetate	79-20-9		U	100	2.50
Methyl tert-butyl ether	1634-04-4		U	50.0	5.00
Methylcyclohexane	108-87-2		U	100	2.50
Methylene chloride	75-09-2		U	50.0	2.50
Styrene	100-42-5		U	50.0	1.25
Tetrachloroethene	127-18-4		U	50.0	2.50
Toluene	108-88-3		U	50.0	2.50
trans-1,3-Dichloropropene	10061-02-6		U	50.0	5.00
Trichloroethene	79-01-6	404		50.0	2.50
Trichlorofluoromethane	75-69-4		U	100	2.50
Vinyl chloride	75-01-4	8.26	J	100	2.50
Xylenes, Total	1330-20-7		U	50.0	5.00

Surrogate	% Recovery	Lower	Upper	Qual
1,2-Dichloroethane-d4	94.6	80	120	
Dibromofluoromethane	96.3	86	118	
p-Bromofluorobenzene	90.7	86	115	
Toluene-d8	92.3	88	110	

U Not detected at or above adjusted sample detection limit
J The analyte was positively identified, but the quantitation was below the RL

Sample Number: **L0612485-07**
Client ID: **29WW40**
Matrix: **Water**
Workgroup Number: **WG230415**
Collect Date: **12/19/2006 15:30**
Sample Tag: **01**

PrePrep Method: **NONE**
Prep Method: **5030B**
Analytical Method: **8260B**
Analyst: **CMS**
Dilution: **1**
Units: **ug/L**

Instrument: **HPMS6**
Prep Date: **12/28/2006 11:52**
Cal Date: **11/20/2006 14:29**
Run Date: **12/28/2006 11:52**
File ID: **6M62916**

Analyte	CAS. Number	Result	Qual	PQL	SQL
1,1,1-Trichloroethane	71-55-6		U	5.00	0.250
1,1,2,2-Tetrachloroethane	79-34-5		U	5.00	0.125
1,1,2-Trichloro-1,2,2-Trifluoroethane	76-13-1		U	10.0	0.250
1,1,2-Trichloroethane	79-00-5		U	5.00	0.250
1,1-Dichloroethane	75-34-3		U	5.00	0.125
1,1-Dichloroethene	75-35-4		U	5.00	0.500
1,2,4-Trichlorobenzene	120-82-1		U	5.00	0.200
1,2-Dibromo-3-chloropropane	96-12-8		U	5.00	1.00
1,2-Dibromoethane	106-93-4		U	5.00	0.250
1,2-Dichlorobenzene	95-50-1		U	5.00	0.125
1,2-Dichloroethane	107-06-2		U	5.00	0.250
cis-1,2-Dichloroethene	156-59-2		U	10.0	0.250
trans-1,2-Dichloroethene	156-60-5		U	5.00	0.250
1,2-Dichloropropane	78-87-5		U	5.00	0.200
1,3-Dichlorobenzene	541-73-1		U	5.00	0.250
1,4-Dichlorobenzene	106-46-7		U	5.00	0.125

Report Number: **L0612485**
Report Date : **January 3, 2007**

00095900

Sample Number: **L0612485-07**
Client ID: **29WW40**
Matrix: **Water**
Workgroup Number: **WG230415**
Collect Date: **12/19/2006 15:30**
Sample Tag: **01**

PrePrep Method: **NONE**
Prep Method: **5030B**
Analytical Method: **8260B**
Analyst: **CMS**
Dilution: **1**
Units: **ug/L**

Instrument: **HPMS6**
Prep Date: **12/28/2006 11:52**
Cal Date: **11/20/2006 14:29**
Run Date: **12/28/2006 11:52**
File ID: **6M62916**

Analyte	CAS. Number	Result	Qual	PQL	SQL
2-Butanone	78-93-3		U	10.0	2.50
2-Hexanone	591-78-6		U	10.0	2.50
4-Methyl-2-pentanone	108-10-1		U	10.0	2.50
Acetone	67-64-1		U	10.0	2.50
Benzene	71-43-2		U	5.00	0.125
Bromodichloromethane	75-27-4		U	5.00	0.250
Bromoform	75-25-2		U	5.00	0.500
Bromomethane	74-83-9		U	10.0	0.500
Carbon disulfide	75-15-0	2.34	J	5.00	0.500
Carbon tetrachloride	56-23-5		U	5.00	0.250
Chlorobenzene	108-90-7		U	5.00	0.125
Chloroethane	75-00-3		U	10.0	0.500
Chloroform	67-66-3		U	5.00	0.125
Chloromethane	74-87-3		U	10.0	0.250
cis-1,3-Dichloropropene	10061-01-5		U	5.00	0.250
Cyclohexane	110-82-7		U	10.0	0.250
Dibromochloromethane	124-48-1		U	5.00	0.250
Dichlorodifluoromethane	75-71-8		U	10.0	0.250
Ethyl benzene	100-41-4		U	5.00	0.250
Isopropylbenzene	98-82-8		U	5.00	0.250
Methyl acetate	79-20-9		U	10.0	0.250
Methyl tert-butyl ether	1634-04-4		U	5.00	0.500
Methylcyclohexane	108-87-2		U	10.0	0.250
Methylene chloride	75-09-2		U	5.00	0.250
Styrene	100-42-5		U	5.00	0.125
Tetrachloroethene	127-18-4		U	5.00	0.250
Toluene	108-88-3		U	5.00	0.250
trans-1,3-Dichloropropene	10061-02-6		U	5.00	0.500
Trichloroethene	79-01-6		U	5.00	0.250
Trichlorofluoromethane	75-69-4		U	10.0	0.250
Vinyl chloride	75-01-4		U	10.0	0.250
Xylenes, Total	1330-20-7		U	5.00	0.500

Surrogate	% Recovery	Lower	Upper	Qual
1,2-Dichloroethane-d4	92.7	80	120	
Dibromofluoromethane	98.2	86	118	
p-Bromofluorobenzene	96.4	86	115	
Toluene-d8	100	88	110	

U Not detected at or above adjusted sample detection limit
J The analyte was positively identified, but the quantitation was below the RL

WORKGROUP SUMMARY BY METHOD

Analysis:Dissolved Gases
Analytical Method:RSK175
Workgroup:WG230008

Lab ID	Client ID	Tclp Date	Prep Date	Analysis Date	Tag	Inst Id	Analyst
L0612485-01	12WW01			12/20/06 17:49	01	HP16	JLS
L0612485-02	12WW02			12/20/06 18:04	01	HP16	JLS
L0612485-03	12WW20			12/20/06 18:18	01	HP16	JLS
L0612485-04	12WW24			12/20/06 18:46	01	HP16	JLS
L0612485-05	12WW05			12/20/06 19:00	01	HP16	JLS
L0612485-06	12WW24-QC			12/20/06 19:14	01	HP16	JLS

Analysis:Dissolved Gases
Extraction Method:5021
Workgroup:WG230008

Lab ID	Client ID	Tclp Date	Prep Date	Analysis Date	Tag	Inst Id	Analyst
L0612485-01	12WW01				230008	HP16	JLS
L0612485-02	12WW02				230008	HP16	JLS
L0612485-03	12WW20				230008	HP16	JLS
L0612485-04	12WW24				230008	HP16	JLS
L0612485-05	12WW05				230008	HP16	JLS
L0612485-06	12WW24-QC				230008	HP16	JLS

Analysis:Common Anions
Analytical Method:300.0
Workgroup:WG230107

Lab ID	Client ID	Tclp Date	Prep Date	Analysis Date	Tag	Inst Id	Analyst
L0612485-01	12WW01			12/20/06 13:38	DL01	IC2	JWR
L0612485-01	12WW01			12/20/06 15:22	DL02	IC2	JWR
L0612485-01	12WW01			12/20/06 15:40	DL03	IC2	JWR
L0612485-02	12WW02			12/20/06 16:32	01	IC2	JWR
L0612485-02	12WW02			12/20/06 17:42	DL01	IC2	JWR
L0612485-03	12WW20			12/20/06 14:13	DL01	IC2	JWR
L0612485-03	12WW20			12/20/06 17:59	DL02	IC2	JWR
L0612485-03	12WW20			12/20/06 18:16	DL03	IC2	JWR
L0612485-04	12WW24			12/20/06 14:30	DL01	IC2	JWR
L0612485-04	12WW24			12/20/06 18:34	DL02	IC2	JWR
L0612485-04	12WW24			12/20/06 18:51	DL03	IC2	JWR
L0612485-05	12WW05			12/20/06 14:48	DL01	IC2	JWR
L0612485-05	12WW05			12/20/06 19:43	DL02	IC2	JWR
L0612485-05	12WW05			12/20/06 20:01	DL03	IC2	JWR
L0612485-06	12WW24-QC			12/20/06 15:05	DL01	IC2	JWR
L0612485-06	12WW24-QC			12/20/06 20:18	DL02	IC2	JWR
L0612485-06	12WW24-QC			12/20/06 20:36	DL03	IC2	JWR

Analysis:Common Anions
Extraction Method:METHOD
Workgroup:WG230107

Lab ID	Client ID	Tclp Date	Prep Date	Analysis Date	Tag	Inst Id	Analyst
L0612485-01	12WW01		12/20/06 12:28			FILTER	JWR
L0612485-02	12WW02		12/20/06 12:28			FILTER	JWR
L0612485-03	12WW20		12/20/06 12:28			FILTER	JWR
L0612485-04	12WW24		12/20/06 12:28			FILTER	JWR
L0612485-05	12WW05		12/20/06 12:28			FILTER	JWR
L0612485-06	12WW24-QC		12/20/06 12:28			FILTER	JWR

Analysis:Dissolved Gases
Analytical Method:RSK175
Workgroup:WG230108

Lab ID	Client ID	Tclp Date	Prep Date	Analysis Date	Tag	Inst Id	Analyst
L0612485-02	12WW02			12/21/06 17:21	DL01	HP16	JLS

Analysis:Dissolved Gases
Extraction Method:5021
Workgroup:WG230108

Lab ID	Client ID	Tclp Date	Prep Date	Analysis Date	Tag	Inst Id	Analyst
L0612485-02	12WW02				230108	HP16	JLS

Analysis:Total Organic Carbon
Analytical Method:415.1
Workgroup:WG230208

Lab ID	Client ID	Tclp Date	Prep Date	Analysis Date	Tag	Inst Id	Analyst
L0612485-01	12WW01			12/26/06 22:34	01	TOC-VWP	DIH
L0612485-01	12WW01			12/26/06 22:34	01	TOC-VWP	DIH
L0612485-03	12WW20			12/26/06 23:07	01	TOC-VWP	DIH
L0612485-03	12WW20			12/26/06 23:07	01	TOC-VWP	DIH
L0612485-05	12WW05			12/27/06 00:02	01	TOC-VWP	DIH
L0612485-05	12WW05			12/27/06 00:02	01	TOC-VWP	DIH

Analysis: Total Organic Carbon
Extraction Method: METHOD
Workgroup: WG230208

Lab ID	Client ID	Tclp Date	Prep Date	Analysis Date	Tag	Inst Id	Analyst
L0612485-01	12WW01			12/26/06 22:34	01	TOC-VWP	DIH
L0612485-03	12WW20			12/26/06 23:07	01	TOC-VWP	DIH
L0612485-05	12WW05			12/27/06 00:02	01	TOC-VWP	DIH

Analysis: Special List - 8260
Analytical Method: 8260B
Workgroup: WG230324

Lab ID	Client ID	Tclp Date	Prep Date	Analysis Date	Tag	Inst Id	Analyst
L0612485-01	12WW01			12/27/06 15:58	01	HPMS11	CMS
L0612485-02	12WW02			12/27/06 16:29	01	HPMS11	CMS
L0612485-03	12WW20			12/27/06 13:24	01	HPMS11	CMS
L0612485-04	12WW24			12/27/06 13:55	01	HPMS11	CMS
L0612485-05	12WW05			12/27/06 14:26	01	HPMS11	CMS
L0612485-06	12WW24-QC			12/27/06 14:57	01	HPMS11	CMS

Analysis: Special List - 8260
Extraction Method: 5030B
Workgroup: WG230324

Lab ID	Client ID	Tclp Date	Prep Date	Analysis Date	Tag	Inst Id	Analyst
L0612485-01	12WW01				230324	HPMS11	CMS
L0612485-02	12WW02				230324	HPMS11	CMS
L0612485-03	12WW20				230324	HPMS11	CMS
L0612485-04	12WW24				230324	HPMS11	CMS
L0612485-05	12WW05				230324	HPMS11	CMS
L0612485-06	12WW24-QC				230324	HPMS11	CMS

Analysis: Total Organic Carbon
Analytical Method: 415.1
Workgroup: WG230345

Lab ID	Client ID	Tclp Date	Prep Date	Analysis Date	Tag	Inst Id	Analyst
L0612485-02	12WW02			12/27/06 12:39	DL01	TOC-VWP	DIH
L0612485-02	12WW02			12/27/06 12:39	DL01	TOC-VWP	DIH
L0612485-04	12WW24			12/27/06 12:55	DL01	TOC-VWP	DIH
L0612485-04	12WW24			12/27/06 12:55	DL01	TOC-VWP	DIH
L0612485-06	12WW24-QC			12/27/06 13:10	DL01	TOC-VWP	DIH
L0612485-06	12WW24-QC			12/27/06 13:10	DL01	TOC-VWP	DIH

Analysis: Total Organic Carbon
Extraction Method: METHOD
Workgroup: WG230345

Lab ID	Client ID	Tclp Date	Prep Date	Analysis Date	Tag	Inst Id	Analyst
L0612485-02	12WW02			12/27/06 12:39	DL01	TOC-VWP	DIH
L0612485-04	12WW24			12/27/06 12:55	DL01	TOC-VWP	DIH
L0612485-06	12WW24-QC			12/27/06 13:10	DL01	TOC-VWP	DIH

Analysis: Special List - 8260
Analytical Method: 8260B
Workgroup: WG230415

Lab ID	Client ID	Tclp Date	Prep Date	Analysis Date	Tag	Inst Id	Analyst
L0612485-07	29WW40			12/28/06 11:52	01	HPMS6	CMS

Analysis: Special List - 8260
Extraction Method: 5030B
Workgroup: WG230415

Lab ID	Client ID	Tclp Date	Prep Date	Analysis Date	Tag	Inst Id	Analyst
L0612485-07	29WW40				230415	HPMS6	MES

Analysis: Special List - 8260
Analytical Method: 8260B
Workgroup: WG230417

Lab ID	Client ID	Tclp Date	Prep Date	Analysis Date	Tag	Inst Id	Analyst
L0612485-04	12WW24			12/28/06 10:13	DL01	HPMS11	CMS
L0612485-06	12WW24-QC			12/28/06 10:43	DL01	HPMS11	CMS

WORKGROUP SUMMARY BY METHOD

00095906

Analysis: Special List - 8260
Extraction Method: 5030B
Workgroup: WG230417

Lab ID	Client ID	Tclp Date	Prep Date	Analysis Date	Tag	Inst Id	Analyst
L0612485-04	12WW24				230417	HPMS11	CMS
L0612485-06	12WW24-QC				230417	HPMS11	CMS

Kemron Environmental Services
Analyst Listing
January 3, 2007

AJF – AMANDA J. FICKIESEN
ALB – ANNIE L. BOCK
ALT – ANN L. THAYER
ARA – ADRIAN R. ACHTERMANN
ASP – AARON S. PETRIE
BRG – BRENDA R. GREGORY
CAA – CASSIE A. AUGENSTEIN
CAF – CHERYL A. FLOWERS
CAK – CHERYL A. KOELSCH
CEB – CHAD E. BARNES
CFB – CHAD F. BOOK
CLC – CHRYS L. CRAWFORD
CLS – CARA L. STRICKLER
CLW – CHARISSA L. WINTERS
CM – CHARLIE MARTIN
CMS – CRYSTAL M. STEPHENS
CPD – CHAD P. DAVIS
CSA – LUCINDA S. ARNOLD
CSH – CHRIS S. HILL
DAS – DALLAS A. SULLIVAN
DD – DIANE M. DENNIS
DDE – DEBRA D. ELLIOTT
DEL – DON E. LIGHTFRITZ
DEV – DAVID E. VANDENBERG
DGB – DOUGLAS G. BUTCHER
DIH – DEANNA I. HESSON
DLB – DAVID L. BUMGARNER
DLP – DOROTHY L. PAYNE
DLR – DIANNA L. RAUCH
DR – DEANNA ROBERTS
DRP – DAVE R. PITZER
DSF – DEBRA S. FREDERICK
DSM – DAVID S. MOSSOR
DST – DENNIS S. TEPE
ECL – ERIC C. LAWSON
ED – EMILY E. DECKER
FJB – FRANCES J. BOLDEN
HAV – HEMA VILASAGAR
JAL – JOHN A. LENT
JKT – JANE K. THOMPSON
JLS – JANICE L. SCHIMMEL
JNB – JOSHUA N. BOOTH
JS – JENNIFER L. SOUTHALL
JWR – JOHN W. RICHARDS
JWS – JACK W. SHEAVES
JYH – JI Y. HU
KCZ – KEVIN C. ZUMBRO
KEB – KATHRYN E. BARNES
KHR – KIM H. RHODES
KRA – KATHY R. ALBERTSON
LKN – LINDA K. NEDEFF
LSB – LESLIE S. BUCINA
MDA – MIKE D. ALBERTSON
MDC – MICHAEL D. COCHRAN
MES – MARY E. SCHILLING
MKZ – MARILYN K. ZUMBRO
MLR – MARY L. ROCHOTTE
MLS – MICHAEL L. SCHIMMEL
MMB – MAREN M. BEERY
MSW – MATT S. WILSON
NJB – NATALIE J. BOOTH
PAS – PATRICK A. STREET
PJM – PAUL J. MILLER
RB – ROBERT BUCHANAN
REK – ROBERT E. KYER
RNP – RICK N. PETTY
RWC – RODNEY W. CAMPBELL
SLM – STEPHANIE L. MOSSBURG
SLP – SHERI L. PFALZGRAF
SMH – SHAUNA M. HYDE
TMB – TIFFANY M. BAILEY
TMM – TAMMY M. MORRIS
VC – VICKI COLLIER
WFM – WALTER F. MARTIN

KEMRON Environmental Services

List of Valid Qualifiers

January 03, 2007

00095908

Qualkey: STD

Qualifier	Description
*	Surrogate or spike compound out of range
+	Correlation coefficient for the MSA is less than 0.995
<	Result is less than the associated numerical value.
>	Result is greater than the associated numerical value.
A	See the report narrative
B	Analyte present in method blank
C	Confirmed by GC/MS
CG	Confluent growth
DL	Surrogate or spike compound was diluted out
E	Estimated concentration due to sample matrix interference
EDL	Elevated sample reporting limits, presence of non-target analytes
EMPC	Estimated Maximum Possible Concentration
FL	Free Liquid
I	Semiquantitative result (out of instrument calibration range)
J	The analyte was positively identified, but the quantitation was below the RL
J,B	Analyte detected in both the method blank and sample above the MDL.
J,P	ESTIMATE & COLUMNS DON'T AGREE TO WITHIN 40%
L	Sample reporting limits elevated due to matrix interference
M	Matrix effect; the concentration is an estimate due to matrix effect.
N	Tentatively identified compound(TIC)
NA	Not applicable
ND	Not detected at or above the reporting limit
NF	Not found by library search
NFL	No free liquid
NI	Non-ignitable
NR	Analyte is not required to be analyzed
NS	Not spiked
P	Concentrations >40% difference between the two GC columns
Q	One or more quality control criteria fail. See narrative.
QNS	Quantity of sample not sufficient to perform analysis
RA	Reanalysis confirms reported results
RE	Reanalysis confirms sample matrix interference
S	Analyzed by method of standard addition
SMI	Sample matrix interference on surrogate
SP	Reported results are for spike compounds only
TIC	Library Search Compound
TNTC	Too numerous to count
U	Undetected; the concentration is below the reported MDL.
UJ	Undetected; the MDL and RL are estimated due to quality control discrepancies.
W	Post-digestion spike for furnace AA out of control limits
X	Exceeds regulatory limit
Z	Cannot be resolved from isomer - see below

*****Special Notes for Organic Analytes**

1. Acrolein and acrylonitrile by method 624 are semi-quantitative screens only.
2. 1,2-Diphenylhydrazine is unstable and is reported as azobenzene.
3. N-nitrosodiphenylamine cannot be separated from diphenylamine.
4. 3-Methylphenol and 4-Methylphenol are unresolvable compounds.
5. m-Xylene and p-Xylene are unresolvable compounds.
6. The reporting limits for Appendix II/IX compounds by method 8270 are based on EPA estimated PQLs referenced in 40 CFR Part 264, Appendix IX. They are not always achievable for every compound an are matrix dependent.

Organic QA/QC

00095910

KEMRON Environmental Services
Data Checklist

Date: 20-NOV-2006
Analyst: CMS
Analyst: NA
Method: 8260B/624
Instrument: HPMS6
Curve Workgroup: NA
Runlog ID: 13467
Analytical Workgroups: WG227929;WG228019

System Performance Check	X
BFB	X
Initial Calibration	X
Average RF	X
Linear Reg or Higher Order Curve	X
Second Source standard % Difference	X
Continuing Calibration /Check Standards	X
Project/Client Specific Requirements	X
Special Standards	NA
Blanks	X
TCL's	X
Surrogates	X
LCS (Laboratory Control Sample)	X
Recoveries	X
Surrogates	X
MS/MSD/Duplicates	NA
Samples	X
TCL Hits	X
Spectra of TCL Hits	X
Surrogates	X
Internal Standards Criteria	X
Library Searches	NA
Calculations & Correct Factors	X
Dilutions Run	X
Reruns	X
Manual Integrations	X
Case Narrative	X
Results Reporting/Data Qualifiers	X
KOBRA Workgroup Data	X
Check for Completeness	X
Primary Reviewer	CMS
Secondary Reviewer	MDA
Check for compliance with method and project specific requirements	X
Check the completeness of reported information	X
Check the information for the report narrative	X
Check the reasonableness of the results	X

Primary Reviewer:
21-NOV-2006

Secondary Reviewer:
22-NOV-2006

Generated: NOV-29-2006 09:17:11

KEMRON Environmental Services
Data Checklist

00095911

Date: 28-NOV-2006
Analyst: CMS
Analyst: NA
Method: 8260B/624
Instrument: HPMS11
Curve Workgroup: NA
Runlog ID: 13560
Analytical Workgroups: WG228336;WG228416

System Performance Check	X
BFB	X
Initial Calibration	X
Average RF	X
Linear Reg or Higher Order Curve	X
Second Source standard % Difference	X
Continuing Calibration /Check Standards	X
Project/Client Specific Requirements	X
Special Standards	NA
Blanks	X
TCL's	X
Surrogates	X
LCS (Laboratory Control Sample)	X
Recoveries	X
Surrogates	X
MS/MSD/Duplicates	NA
Samples	X
TCL Hits	X
Spectra of TCL Hits	X
Surrogates	X
Internal Standards Criteria	X
Library Searches	NA
Calculations & Correct Factors	X
Dilutions Run	X
Reruns	X
Manual Integrations	X
Case Narrative	X
Results Reporting/Data Qualifiers	X
KOBRA Workgroup Data	X
Check for Completeness	X
Primary Reviewer	CMS
Secondary Reviewer	MDA
Check for compliance with method and project specific requirements	X
Check the completeness of reported information	X
Check the information for the report narrative	X
Check the reasonableness of the results	X

Primary Reviewer:
29-NOV-2006

Secondary Reviewer:
29-NOV-2006

Generated: NOV-29-2006 14:59:24

00095912

KEMRON Environmental Services
Data Checklist

Date: 27-DEC-2006
Analyst: CMS
Analyst: NA
Method: 8260B
Instrument: HPMS11
Curve Workgroup: NA
Runlog ID: 13959
Analytical Workgroups: WG230324

System Performance Check	X
BFB	X
Initial Calibration	X
Average RF	X
Linear Reg or Higher Order Curve	X
Second Source standard % Difference	X
Continuing Calibration /Check Standards	X
Project/Client Specific Requirements	X
Special Standards	NA
Blanks	X
TCL's	X
Surrogates	X
LCS (Laboratory Control Sample)	X
Recoveries	X
Surrogates	X
MS/MSD/Duplicates	NA
Samples	X
TCL Hits	X
Spectra of TCL Hits	X
Surrogates	X
Internal Standards Criteria	X
Library Searches	NA
Calculations & Correct Factors	X
Dilutions Run	X
Reruns	X
Manual Integrations	X
Case Narrative	X
Results Reporting/Data Qualifiers	X
KOBRA Workgroup Data	X
Check for Completeness	X
Primary Reviewer	CMS
Secondary Reviewer	MDA
Check for compliance with method and project specific requirements	X
Check the completeness of reported information	X
Check the information for the report narrative	X
Check the reasonableness of the results	X

Primary Reviewer:
28-DEC-2006

Secondary Reviewer:
02-JAN-2007

Generated: JAN-02-2007 10:27:09

KEMRON Environmental Services
Data Checklist

00095913

Date: 28-DEC-2007
Analyst: CMS
Analyst: NA
Method: 8260B
Instrument: HPMS6
Curve Workgroup: NA
Runlog ID: 14010
Analytical Workgroups: WG230415

System Performance Check	X
BFB	X
Initial Calibration	X
Average RF	X
Linear Reg or Higher Order Curve	X
Second Source standard % Difference	X
Continuing Calibration /Check Standards	X
Project/Client Specific Requirements	X
Special Standards	NA
Blanks	X
TCL's	X
Surrogates	X
LCS (Laboratory Control Sample)	X
Recoveries	X
Surrogates	X
MS/MSD/Duplicates	NA
Samples	X
TCL Hits	X
Spectra of TCL Hits	X
Surrogates	X
Internal Standards Criteria	X
Library Searches	NA
Calculations & Correct Factors	X
Dilutions Run	X
Reruns	NA
Manual Integrations	X
Case Narrative	X
Results Reporting/Data Qualifiers	X
KOBRA Workgroup Data	X
Check for Completeness	X
Primary Reviewer	CMS
Secondary Reviewer	MDA
Check for compliance with method and project specific requirements	X
Check the completeness of reported information	X
Check the information for the report narrative	X
Check the reasonableness of the results	X

Primary Reviewer:
02-JAN-2007

Secondary Reviewer:
02-JAN-2007

Generated: JAN-02-2007 14:54:50

KEMRON Environmental Services
Data Checklist

00095914

Date: 28-DEC-2006
Analyst: CMS
Analyst: NA
Method: 8260
Instrument: HPMS11
Curve Workgroup: NA
Runlog ID: 14008
Analytical Workgroups: WG230417

System Performance Check	NA
BFB	X
Initial Calibration	X
Average RF	X
Linear Reg or Higher Order Curve	X
Second Source standard % Difference	X
Continuing Calibration /Check Standards	X
Project/Client Specific Requirements	X
Special Standards	NA
Blanks	X
TCL's	X
Surrogates	X
LCS (Laboratory Control Sample)	X
Recoveries	X
Surrogates	X
MS/MSD/Duplicates	X
Samples	X
TCL Hits	X
Spectra of TCL Hits	X
Surrogates	X
Internal Standards Criteria	X
Library Searches	NA
Calculations & Correct Factors	X
Dilutions Run	X
Reruns	X
Manual Integrations	NA
Case Narrative	X
Results Reporting/Data Qualifiers	X
KOBRA Workgroup Data	X
Check for Completeness	X
Primary Reviewer	MES
Secondary Reviewer	MDA
Check for compliance with method and project specific requirements	X
Check the completeness of reported information	X
Check the information for the report narrative	X
Check the reasonableness of the results	X

Primary Reviewer:
02-JAN-2007

Secondary Reviewer:
02-JAN-2007

Generated: JAN-02-2007 14:22:32

KEMRON Environmental Services

Instrument Run Log

00095915

Instrument: HPMS6 Dataset: 112006
Analyst1: CMS Analyst2: NA
Method: 8260B SOP: MSV01 Rev: 10
Method: 624 SOP: MSV10 Rev: 9
Method: 5030B SOP: PAT01 Rev: 10
Maintenance Log ID: 16762

Internal Standard: STD16289 Surrogate Standard: STD16354
CCV: STD16437 LCS: STD16443 MS/MSD: NA

Column 1 ID: RTX502.2 Column 2 ID: NA
Workgroups: WG227929;WG228019

Comments:

Seq.	File ID	Sample Information	pH	Mat	Dil	Reference	Date/Time
1	6M62035	SYSTEM BLANK	NA	1	1		11/20/06 08:03
2	6M62036	SYSTEM BLANK	NA	1	1		11/20/06 08:35
3	6M62037	WG227929-01 BFB 50ng STD 8260	NA	1	1	STD16160	11/20/06 09:10
4	6M62038	WG227929-02 0.30ug/L STD 8260	NA	1	1	STD16437	11/20/06 09:38
5	6M62039	WG227929-03 0.40ug/L STD 8260	NA	1	1	STD16437	11/20/06 10:10
6	6M62040	WG227929-04 1ug/L STD 8260	NA	1	1	STD16437	11/20/06 10:43
7	6M62041	WG227929-05 2ug/L STD 8260	NA	1	1	STD16437	11/20/06 11:15
8	6M62042	WG227929-06 5ug/L STD 8260	NA	1	1	STD16437	11/20/06 11:47
9	6M62043	WG227929-07 20ug/L STD 8260	NA	1	1	STD16437	11/20/06 12:19
10	6M62044	WG227929-08 50ug/L STD 8260	NA	1	1	STD16437	11/20/06 12:52
11	6M62045	WG227929-09 100ug/L STD 8260	NA	1	1	STD16437	11/20/06 13:24
12	6M62046	WG227929-10 150ug/L STD 8260	NA	1	1	STD16437	11/20/06 13:57
13	6M62047	WG227929-11 200ug/L STD 8260	NA	1	1	STD16437	11/20/06 14:29
14	6M62049	SYSTEM BLANK	NA	1	1		11/20/06 15:34
15	6M62050	WG227929-12 20ug/L LCS STD 8260	NA	1	1	STD16443	11/20/06 16:09
16	6M62051	WG227929-12 20ug/L LCS STD 8260	NA	1	1	STD16443	11/20/06 17:01
17	6M62052	WG228018-01 BFB 50ng STD 8260	NA	1	1	STD16160	11/20/06 17:31
18	6M62053	WG228018-01 BFB 50ng STD 8260	NA	1	1	STD16160	11/20/06 18:00
19	6M62054	WG228018-02 50ug/L STD 8260	NA	1	1	STD16437	11/20/06 18:27
20	6M62055	WG228019-01 VBLK1120 BLANK 8260	NA	1	1		11/20/06 18:59
21	6M62056	WG228019-02 20ug/L LCS STD 8260	NA	1	1	STD16443	11/20/06 19:32
22	6M62057	WG228019-03 20ug/L LCSDUP STD 8260	NA	1	1	STD16443	11/20/06 20:04
23	6M62058	WG228019-04 FBLK1113 FLUID BLK	NA	18	1		11/20/06 20:36
24	6M62059	L0611351-11 A 826-SPE	<2	1	1		11/20/06 21:09
25	6M62060	L0611355-07 A 826-SPE	<2	1	1		11/20/06 21:41
26	6M62061	L0611356-08 A 826-SPE	<2	1	1		11/20/06 22:14
27	6M62062	L0611321-09 A 826-SPE	<2	1	1		11/20/06 22:48
28	6M62063	L0611321-01 A 826-SPE/826-LS	=6	1	1		11/20/06 23:21
29	6M62064	L0611321-02 A 826-SPE/826-LS	<2	1	1		11/20/06 23:53
30	6M62065	L0611321-04 A 826-SPE/826-LS	<2	1	1		11/21/06 00:26
31	6M62066	L0611321-06 A 826-SPE/826-LS	<2	1	1		11/21/06 00:58
32	6M62067	L0611321-07 A 826-SPE/826-LS	<2	1	1		11/21/06 01:30

Approved: November 22, 2006

KEMRON Environmental Services

Instrument Run Log

00095916

Instrument: HPMS6 Dataset: 112006
Analyst1: CMS Analyst2: NA
Method: 8260B SOP: MSV01 Rev: 10
Method: 624 SOP: MSV10 Rev: 9
Method: 5030B SOP: PAT01 Rev: 10
Maintenance Log ID: 16762

Internal Standard: STD16289 Surrogate Standard: STD16354
CCV: STD16437 LCS: STD16443 MS/MSD: NA

Column 1 ID: RTX502.2 Column 2 ID: NA
Workgroups: WG227929;WG228019

Seq.	File ID	Sample Information	pH	Mat	Dil	Reference	Date/Time
33	6M62068	L0611355-01 A 826-SPE	<2	1	1		11/21/06 02:04
34	6M62069	L0611355-02 A 826-SPE	<2	1	1		11/21/06 02:37
35	6M62070	L0611355-03 A 826-SPE	<2	1	1		11/21/06 03:11
36	6M62071	L0611355-04 A 826-SPE	<2	1	1		11/21/06 03:44
37	6M62072	L0611355-05 A 826-SPE	<2	1	1		11/21/06 04:16
38	6M62073	L0611355-06 A 826-SPE	<2	1	1		11/21/06 04:48
39	6M62074	L0611351-08 A 10X 826-SPE/826-LS	=2.5	1	10		11/21/06 05:20
40	6M62075	L0611351-09 A 10X 826-SPE/826-LS D1	<2	1	10		11/21/06 05:53
41	6M62076	SYSTEM BLANK	NA	1	1		11/21/06 06:27
42	6M62077	WG228019-05 624 BLANK	NA	2	1		11/21/06 07:01
43	6M62078	L0611478-01 A 624-SPE	<2	2	1		11/21/06 07:34
44	6M62079	L0611478-02 A 624-SPE	<2	2	1		11/21/06 08:08

Comments

Seq.	Rerun	Dil.	Reason	Analytes
15	X			
File ID: 6M62050				
	RR-2-Butanone high-DNR			
17	X			
File ID: 6M62052				
	Tune failed/DNR			
40	X	2	Analyzed too dilute	
File ID: 6M62075				
	D1 if needed			

Approved: November 22, 2006

00095917

KEMRON Environmental Services

Instrument Run Log

Instrument: HPMS11 Dataset: 112806

Analyst1: CMS Analyst2: NA

Method: 8260B SOP: MSV01 Rev: 10

Method: 624 SOP: MSV10 Rev: 9

Method: 5030B SOP: PAT01 Rev: 10

Maintenance Log ID: 16856

Internal Standard: STD16509 Surrogate Standard: STD16510

CCV: STD16549 LCS: STD16525 MS/MSD: NAWG228336;WG22841

Column 1 ID: RTX502.2 Column 2 ID: NA

Workgroups: WG228336;WG228416

Comments:

Seq.	File ID	Sample Information	pH	Mat	Dil	Reference	Date/Time
1	11M38433	SYSTEM BLANK	NA	1	1		11/28/06 07:49
2	11M38434	WG228336-01 BFB 50ng STD 8260	NA	1	1	STD16160	11/28/06 08:17
3	11M38435	WG228336-02 0.30ug/L STD 8260	NA	1	1	STD16549	11/28/06 08:46
4	11M38436	WG228336-03 0.40ug/L STD 8260	NA	1	1	STD16549	11/28/06 09:17
5	11M38437	WG228336-04 1ug/L STD 8260	NA	1	1	STD16549	11/28/06 09:51
6	11M38438	WG228336-05 2ug/L STD 8260	NA	1	1	STD16549	11/28/06 10:22
7	11M38439	WG228336-06 5ug/L STD 8260	NA	1	1	STD16549	11/28/06 10:53
8	11M38440	WG228336-07 20ug/L STD 8260	NA	1	1	STD16549	11/28/06 11:24
9	11M38441	WG228336-08 50ug/L STD 8260	NA	1	1	STD16549	11/28/06 11:54
10	11M38442	WG228336-09 100ug/L STD 8260	NA	1	1	STD16549	11/28/06 12:25
11	11M38443	WG228336-10 200ug/L STD 8260	NA	1	1	STD16549	11/28/06 12:56
12	11M38444	SYSTEM BLANK	NA	1	1		11/28/06 13:27
13	11M38445	SYSTEM BLANK	NA	1	1		11/28/06 13:58
14	11M38446	WG228336-11 20ug/L ALT SOURCE STD 8	NA	1	1	STD16525	11/28/06 14:28
15	11M38447	WG228415-01 BFB 50ng STD 8260	NA	1	1	STD16160	11/28/06 14:59
16	11M38448	WG228415-02 50ug/L STD 8260	NA	1	1	STD16549	11/28/06 15:28
17	11M38449	WG228416-01 VBLK1128 BLANK 8260	NA	1	1		11/28/06 15:59
18	11M38450	WG228416-02 20ug/L LCS STD 8260	NA	1	1	STD16525	11/28/06 16:30
19	11M38451	WG228416-03 20ug/L LCSDUP STD 8260	NA	1	1	STD16525	11/28/06 17:01
20	11M38452	L0611600-07 A 826-SPE	<2	1	1		11/28/06 17:32
21	11M38453	L0611489-04 A 826-SPE	<2	1	1		11/28/06 18:03
22	11M38454	L0611477-11 A 826-SPE1	<2	1	1		11/28/06 18:34
23	11M38455	L0611490-05 A 826-LOW	<2	1	1		11/28/06 19:04
24	11M38456	L0611490-08 A 826-LOW	<2	1	1		11/28/06 19:35
25	11M38457	L0611490-06 A 826-LOW	<2	1	1		11/28/06 20:07
26	11M38458	L0611511-01 A 826-SPE	<2	1	1		11/28/06 20:37
27	11M38459	L0611511-02 A 826-SPE	<2	1	1		11/28/06 21:08
28	11M38460	L0611511-03 A 826-SPE	<2	1	1		11/28/06 21:39
29	11M38461	L0611511-04 A 826-SPE	<2	1	1		11/28/06 22:10
30	11M38462	L0611511-05 A 826-SPE	<2	1	1		11/28/06 22:41
31	11M38463	L0611511-06 A 826-SPE	<2	1	1		11/28/06 23:12
32	11M38464	L0611511-07 A 826-SPE	<2	1	1		11/28/06 23:43

Approved: November 29, 2006

KEMRON Environmental Services

Instrument Run Log

00095918

Instrument: HPMS11 Dataset: 112806
Analyst1: CMS Analyst2: NA
Method: 8260B SOP: MSV01 Rev: 10
Method: 624 SOP: MSV10 Rev: 9
Method: 5030B SOP: PAT01 Rev: 10
Maintenance Log ID: 16856

Internal Standard: STD16509 Surrogate Standard: STD16510
CCV: STD16549 LCS: STD16525 MS/MSD: NAWG228336;WG22841

Column 1 ID: RTX502.2 Column 2 ID: NA
Workgroups: WG228336;WG228416

Seq.	File ID	Sample Information	pH	Mat	Dil	Reference	Date/Time
33	11M38465	L0611477-07 A 826-SPE1	<2	1	1		11/29/06 00:13
34	11M38466	L0611477-08 A 826-SPE1	<2	1	1		11/29/06 00:44
35	11M38467	L0611477-09 A 826-SPE1	<2	1	1		11/29/06 01:15
36	11M38468	L0611477-10 A 826-SPE1	<2	1	1		11/29/06 01:45
37	11M38469	L0611588-02 A 100X 8260	<2	1	100		11/29/06 02:16
38	11M38470	L0611588-01 A 100X 8260	NA	12	100		11/29/06 02:47
39	11M38471	SYSTEM BLANK	NA	1	1		11/29/06 03:17

Comments

Seq.	Rerun	Dil.	Reason	Analytes
33	X	5	Over Calibration Range	TCE
File ID: 11M38465				
35	X	10	Over Calibration Range	EB, m+p-Xyl., 1,2,4-TMB
File ID: 11M38467				
36	X		Carry-over contamination	
File ID: 11M38468				
	DNR			
37	X		Analyzed too dilute	
File ID: 11M38469				
	DNR			
38	X	5	Analyzed too dilute	
File ID: 11M38470				
	DNR			

Approved: November 29, 2006

00095919

KEMRON Environmental Services

Instrument Run Log

Instrument: HPMS11 Dataset: 122706

Analyst1: CMS Analyst2: NA

Method: 8260B SOP: MSV01 Rev: 10

Method: 5030B SOP: PAT01 Rev: 10

Maintenance Log ID: 17218

Internal Standard: STD16956 Surrogate Standard: STD16828

CCV: STD16922 LCS: STD16929 MS/MSD: NA

Column 1 ID: RTX502.2 Column 2 ID: NA

Workgroups: WG230324

Comments:

Seq.	File ID	Sample Information	pH	Mat	Dil	Reference	Date/Time
1	11M39115	WG230323-01 50NG BFB STD 8260	NA	1	1	STD16662	12/27/06 08:19
2	11M39116	WG230323-02 50ug/L STD 8260	NA	1	1	STD16922	12/27/06 08:46
3	11M39117	WG230324-01 VBLK1227 BLANK 8260	NA	1	1		12/27/06 09:17
4	11M39118	WG230324-02 20ug/L LCS STD 8260	NA	1	1	STD16929	12/27/06 09:48
5	11M39119	WG230324-03 20ug/L LCSDUP STD 8260	NA	1	1	STD16929	12/27/06 10:19
6	11M39120	L0612487-19 B 50X 8260 D1	<2	1	50		12/27/06 10:50
7	11M39121	L0612487-13 B 8260	<2	1	1		12/27/06 11:21
8	11M39122	L0612487-03 B 8260	<2	1	1		12/27/06 11:52
9	11M39123	L0612487-09 B 8260	<2	1	1		12/27/06 12:23
10	11M39124	L0612487-15 B 8260	<2	1	1		12/27/06 12:53
11	11M39125	L0612485-03 A 826-SPE	<2	1	1		12/27/06 13:24
12	11M39126	L0612485-04 A 826-SPE	<2	1	1		12/27/06 13:55
13	11M39127	L0612485-05 A 826-SPE	<2	1	1		12/27/06 14:26
14	11M39128	L0612485-06 A 826-SPE	=2.2	1	1		12/27/06 14:57
15	11M39129	L0612485-07 A 826-SPE	<2	1	1		12/27/06 15:27
16	11M39130	L0612485-01 A 826-SPE	<2	1	1		12/27/06 15:58
17	11M39131	L0612485-02 A 826-SPE	<2	1	1		12/27/06 16:29
18	11M39132	L0612465-01 A 826-SPE	<2	1	1		12/27/06 16:59
19	11M39133	L0612465-02 A 826-SPE	<2	1	1		12/27/06 17:30
20	11M39134	L0612465-03 A 826-SPE	=4	1	1		12/27/06 18:02
21	11M39135	L0612465-04 A 826-SPE	<2	1	1		12/27/06 18:33
22	11M39136	L0612465-05 A 826-SPE	<2	1	1		12/27/06 19:04
23	11M39137	L0612465-06 A 826-SPE	<2	1	1		12/27/06 19:35
24	11M39138	L0612465-07 A 826-SPE	<2	1	1		12/27/06 20:05
25	11M39139	SYSTEM BLANK	NA	1	1		12/27/06 20:36

Comments

Seq.	Rerun	Dil.	Reason	Analytes
10	X		Carry-over contamination	
File ID: 11M39124				
	DNR			
12	X	10	Over Calibration Range	TCE

Approved: January 02, 2007

KEMRON Environmental Services

Instrument Run Log

00095920

Instrument: HPMS11 Dataset: 122706
Analyst1: CMS Analyst2: NA
Method: 8260B SOP: MSV01 Rev: 10
Method: 5030B SOP: PAT01 Rev: 10

Maintenance Log ID: 17218

Internal Standard: STD16956 Surrogate Standard: STD16828
CCV: STD16922 LCS: STD16929 MS/MSD: NA

Column 1 ID: RTX502.2 Column 2 ID: NA
Workgroups: WG230324

Comments

Seq.	Rerun	Dil.	Reason	Analytes
File ID: 11M39126				
14	X	10	Over Calibration Range	TCE
File ID: 11M39128				
15	X		Carry-over contamination	
File ID: 11M39129				
	DNR			
19	X	50	Over Calibration Range	VC
File ID: 11M39133				
20	X	20	Over Calibration Range	VC, 2-Butanone, cis-1,2-DCE
File ID: 11M39134				
21	X		Carry-over contamination	
File ID: 11M39135				
	DNR			
22	X	10	Over Calibration Range	VC
File ID: 11M39136				
23	X		Carry-over contamination	
File ID: 11M39137				
	DNR			

Approved: January 02, 2007

00095921

KEMRON Environmental Services

Instrument Run Log

Instrument: HPMS6 Dataset: 122806

Analyst1: CMS Analyst2: NA

Method: 8260B SOP: MSV01 Rev: 10

Method: 5030B SOP: PAT01 Rev: 10

Maintenance Log ID: 17264

Internal Standard: STD16934 Surrogate Standard: STD16935

CCV: STD16907 LCS: STD16929 MS/MSD: NA

Column 1 ID: RTX502.2 Column 2 ID: NA

Workgroups: WG230415

Comments:

Seq.	File ID	Sample Information	pH	Mat	Dil	Reference	Date/Time
1	6M62907	WG230414-01 BFB 50ng STD 8260	NA	1	1	STD16662	12/28/06 07:21
2	6M62908	WG230414-01 BFB 50ng STD 8260	NA	1	1	STD16662	12/28/06 07:35
3	6M62909	WG230414-02 50ug/L STD 8260	NA	1	1	STD16907	12/28/06 08:05
4	6M62910	WG230415-01 VBLK1228 BLANK 8260	NA	1	1		12/28/06 08:38
5	6M62911	WG230415-02 20ug/L LCS STD 8260	NA	1	1	STD16929	12/28/06 09:10
6	6M62912	WG230415-03 20ug/L LCSDUP STD 8260	NA	1	1	STD16929	12/28/06 09:43
7	6M62913	L0612533-09 B 5X 826-SPE D1	<2	1	5		12/28/06 10:15
8	6M62914	L0612575-11 B 100X 826-SPE D1	<2	1	100		12/28/06 10:47
9	6M62915	L0612487-15 A 8260	<2	1	1		12/28/06 11:20
10	6M62916	L0612485-07 B 826-SPE	<2	1	1		12/28/06 11:52
11	6M62917	L0612465-06 B 826-SPE	<2	1	1		12/28/06 12:24
12	6M62918	L0612465-04 B 826-SPE	<2	1	1		12/28/06 12:57
13	6M62919	L0612503-05 A 10X 8260	NA	12	10		12/28/06 13:29
14	6M62920	L0612575-03 A 826-SPE	<2	1	1		12/28/06 14:05
15	6M62921	L0612575-05 B 826-SPE	<2	1	1		12/28/06 14:37
16	6M62922	L0612575-09 B 826-SPE	<2	1	1		12/28/06 15:10
17	6M62923	L0612575-10 B 826-SPE	<2	1	1		12/28/06 15:42
18	6M62924	L0612575-12 B 826-SPE	<2	1	1		12/28/06 16:14
19	6M62925	L0612575-01 B 20X 826-SPE	<2	1	20		12/28/06 16:46
20	6M62926	L0612575-02 B 10X 826-SPE	<2	1	10		12/28/06 17:19
21	6M62927	L0612575-04 B 20X 826-SPE	<2	1	20		12/28/06 17:52
22	6M62928	L0612575-07 B 5X 826-SPE	<2	1	5		12/28/06 18:24
23	6M62929	L0612465-08 B 826-SPE	<2	1	1		12/28/06 18:57
24	6M62930	L0612465-09 B 826-SPE	<2	1	1		12/28/06 19:29
25	6M62931	SYSTEM CHECK	NA	1	1		12/28/06 20:01
26	6M62932	SYSTEM CHECK	NA	1	1		12/28/06 20:34

Comments

Seq.	Rerun	Dil.	Reason	Analytes
1	X			

File ID: 6M62907

Approved: January 02, 2007

KEMRON Environmental Services

Instrument Run Log

00095922

Instrument: HPMS6 Dataset: 122806

Analyst1: CMS Analyst2: NA

Method: 8260B SOP: MSV01 Rev: 10

Method: 5030B SOP: PAT01 Rev: 10

Maintenance Log ID: 17264

Internal Standard: STD16934 Surrogate Standard: STD16935

CCV: STD16907 LCS: STD16929 MS/MSD: NA

Column 1 ID: RTX502.2 Column 2 ID: NA

Workgroups: WG230415

Comments

Seq.	Rerun	Dil.	Reason	Analytes
			Tune failed/DNR	

Approved: January 02, 2007

00095923

KEMRON Environmental Services

Instrument Run Log

Instrument: HPMS11 Dataset: 122806

Analyst1: CMS Analyst2: NA

Method: 8260B SOP: MSV01 Rev: 10

Method: 5030/5035 SOP: PAT01 Rev: 10

Maintenance Log ID: 17261

Internal Standard: STD16956 Surrogate Standard: STD16828

CCV: STD16922 LCS: STD16929 MS/MSD: STD16929

Column 1 ID: RTX502.2 Column 2 ID: NA

Workgroups: WG230417

Comments:

Seq.	File ID	Sample Information	pH	Mat	Dil	Reference	Date/Time
1	11M39141	WG230416-01 50NG BFB STD 8260	NA	1	1	STD16662	12/28/06 07:21
2	11M39142	WG230416-01 50NG BFB STD 8260	NA	1	1	STD16662	12/28/06 07:36
3	11M39143	WG230416-02 50ug/L STD 8260	NA	1	1	STD16922	12/28/06 08:09
4	11M39144	WG230417-01 VBLK1228 BLANK 8260	NA	1	1		12/28/06 08:40
5	11M39145	WG230417-02 20ug/L LCS STD 8260	NA	1	1	STD16929	12/28/06 09:11
6	11M39146	L0612412-09 C D1 10X 826-SPE	<2	1	10		12/28/06 09:41
7	11M39147	L0612485-04 B D1 10X 826-SPE	<2	1	10		12/28/06 10:13
8	11M39148	L0612485-06 B D1 10X 826-SPE	<2	1	10		12/28/06 10:43
9	11M39149	L0612465-05 B D1 10X 826-SPE	<2	1	10		12/28/06 11:14
10	11M39150	L0612465-02 B D1 50X 826-SPE	<2	1	50		12/28/06 11:45
11	11M39151	L0612465-03 B D1 20X 826-SPE	5	1	20		12/28/06 12:16
12	11M39152	L0612593-13 A 826-SPE	7	1	1		12/28/06 12:47
13	11M39153	L0612593-01 A 826-SPE	7	1	1		12/28/06 13:18
14	11M39154	L0612593-03 MS A 826-SPE	7	1	1	STD16929	12/28/06 13:49
15	11M39155	L0612593-05 MSD A 826-SPE	7	1	1	STD16929	12/28/06 14:20
16	11M39156	L0612593-07 A 826-SPE	7	1	1		12/28/06 14:51
17	11M39157	L0612593-09 A 826-SPE	7	1	1		12/28/06 15:22
18	11M39158	L0612593-11 A 826-SPE	7	1	1		12/28/06 15:53
19	11M39159	L0612532-01 A 826-LOW	<2	1	1		12/28/06 16:23
20	11M39160	L0612412-06 B D1 10X 826-SPE	<2	1	10		12/28/06 16:54
21	11M39161	L0612532-02 A 826-LOW	<2	1	1		12/28/06 17:25
22	11M39162	L0612532-03 A 826-LOW	7	1	1		12/28/06 17:56
23	11M39163	L0612533-03 A 826-SPE	<2	1	1		12/28/06 18:27
24	11M39164	L0612533-04 A 826-SPE	<2	1	1		12/28/06 18:58
25	11M39165	L0612533-05 A 826-SPE	<2	1	1		12/28/06 19:28
26	11M39166	SYSTEM BLANK	NA	1	1		12/28/06 19:59

Comments

Seq.	Rerun	Dil.	Reason	Analytes
1				
File ID: 11M39141				

Approved: January 02, 2007

KEMRON Environmental Services

Instrument Run Log

00095924

Instrument: HPMS11 Dataset: 122806

Analyst1: CMS Analyst2: NA

Method: 8260B SOP: MSV01 Rev: 10

Method: 5030/5035 SOP: PAT01 Rev: 10

Maintenance Log ID: 17261

Internal Standard: STD16956 Surrogate Standard: STD16828

CCV: STD16922 LCS: STD16929 MS/MSD: STD16929

Column 1 ID: RTX502.2 Column 2 ID: NA

Workgroups: WG230417

Comments

Seq.	Rerun	Dil.	Reason	Analytes
			RR-BFB failed.	
11	X	50	Over Calibration Range	vc
File ID: 11M39151				
19	X	50	Over Calibration Range	vc,cis-1,2,1,2-DCB
File ID: 11M39159				
20	X	10		
File ID: 11M39160				
			RR to confirm dilution for vinyl chloride. Planning to report D1 from 12/29/06.	
21	X	1	Carry-over contamination	
File ID: 11M39161				
			Do not report.	
22	X	1	Carry-over contamination	
File ID: 11M39162				
			Do not report.	

Approved: January 02, 2007

KEMRON Environmental Services
HOLDING TIMES
EQUIVALENT TO AFCEE FORM 9

00095925

Analytical Method: 8260B AAB#: WG230417

Login Number: L0612485

Client ID	Date Collected	Date Received	Date Extracted	Max Hold Time Ext.	Time Held Ext.	Date Analyzed	Max Hold Time Anal	Time Held Anal.	Q
12WW24	12/19/06	12/20/06	12/28/06	14	8.86	12/28/06	14	8.86	
12WW24-QC	12/19/06	12/20/06	12/28/06	14	8.88	12/28/06	14	8.88	

* EXT = SEE PROJECT QAPP REQUIREMENTS
*ANAL = SEE PROJECT QAPP REQUIREMENTS

KEMRON FORMS - Modified 11/20/2006
Version 1.5 PDF File ID: 659347
Report generated 01/02/2007 16:01

KEMRON Environmental Services
HOLDING TIMES
EQUIVALENT TO AFCEE FORM 9

00095926

Analytical Method: 8260B AAB#: WG230324

Login Number: L0612485

Client ID	Date Collected	Date Received	Date Extracted	Max Hold Time Ext.	Time Held Ext.	Date Analyzed	Max Hold Time Anal	Time Held Anal.	Q
12WW05	12/19/06	12/20/06	12/27/06	14	8.24	12/27/06	14	8.24	
12WW20	12/19/06	12/20/06	12/27/06	14	8.08	12/27/06	14	8.08	
12WW02	12/19/06	12/20/06	12/27/06	14	8.27	12/27/06	14	8.27	
12WW24-QC	12/19/06	12/20/06	12/27/06	14	8.06	12/27/06	14	8.06	
12WW01	12/19/06	12/20/06	12/27/06	14	8.07	12/27/06	14	8.07	
12WW24	12/19/06	12/20/06	12/27/06	14	8.01	12/27/06	14	8.01	

* EXT = SEE PROJECT QAPP REQUIREMENTS
*ANAL = SEE PROJECT QAPP REQUIREMENTS

KEMRON FORMS - Modified 11/20/2006
Version 1.5 PDF File ID: 659347
Report generated 01/02/2007 16:01

KEMRON Environmental Services
HOLDING TIMES
EQUIVALENT TO AFCEE FORM 9

00095927

Analytical Method: 8260B AAB#: WG230415

Login Number: L0612485

Client ID	Date Collected	Date Received	Date Extracted	Max Hold Time Ext.	Time Held Ext.	Date Analyzed	Max Hold Time Anal	Time Held Anal.	Q
29WW40	12/19/06	12/20/06	12/28/06	14	8.85	12/28/06	14	8.85	

* EXT = SEE PROJECT QAPP REQUIREMENTS
*ANAL = SEE PROJECT QAPP REQUIREMENTS

KEMRON FORMS - Modified 11/20/2006
Version 1.5 PDF File ID: 659347
Report generated 01/02/2007 16:01

SURROGATE STANDARDS

00095928

Login Number: L0612485
Instrument Id: HPMS6
Workgroup (AAB#): WG230415

Method: 8260
CAL ID: HPMS6-20-NOV-06
Matrix: Water

Sample Number	Dilution	Tag	1	2	3	4
L0612485-07	1.00	01	92.7	98.2	96.4	100
WG230415-01	1.00	01	87.5	95.7	91.8	100
WG230415-02	1.00	01	88.8	96.5	93.5	99.9
WG230415-03	1.00	01	88.7	96.7	92.7	100

Surrogates	Surrogate Limits		
1 - 1,2-Dichloroethane-d4	80	-	120
2 - Dibromofluoromethane	86	-	118
3 - p-Bromofluorobenzene	86	-	115
4 - Toluene-d8	88	-	110

Underline = Result out of surrogate limits

DL = surrogate diluted out
ND = surrogate not detected

KEMRON FORMS - Modified 09/27/2006
Version 1.5 PDF File ID: 659363
Report generated 01/02/2007 16:01

SURROGATE STANDARDS

00095929

Login Number: L0612485
Instrument Id: HPMS11
Workgroup (AAB#): WG230417

Method: 8260
CAL ID: HPMS11-28-NOV-06
Matrix: Water

Sample Number	Dilution	Tag	1	2	3	4
L0612485-04	10.0	DL01	91.2	95.3	90.4	92.7
L0612485-06	10.0	DL01	94.6	96.3	90.7	92.3
WG230417-01	1.00	01	90.0	94.9	91.8	94.5
WG230417-02	1.00	01	91.4	96.0	89.7	92.2

Surrogates	Surrogate Limits		
1 - 1,2-Dichloroethane-d4	80	-	120
2 - Dibromofluoromethane	86	-	118
3 - p-Bromofluorobenzene	86	-	115
4 - Toluene-d8	88	-	110

Underline = Result out of surrogate limits

DL = surrogate diluted out
ND = surrogate not detected

KEMRON FORMS - Modified 09/27/2006
Version 1.5 PDF File ID: 659363
Report generated 01/02/2007 16:01

KEMRON Environmental Services

SURROGATE STANDARDS

00095930

Login Number: L0612485
Instrument Id: HPMS11
Workgroup (AAB#): WG230324

Method: 8260
CAL ID: HPMS11-28-NOV-06
Matrix: Water

Sample Number	Dilution	Tag	1	2	3	4
L0612485-01	1.00	01	93.6	95.6	89.7	93.3
L0612485-02	1.00	01	94.1	96.5	90.7	92.5
L0612485-03	1.00	01	89.9	94.0	91.0	92.6
L0612485-04	1.00	01	91.3	95.6	91.1	95.6
L0612485-05	1.00	01	91.9	95.3	90.7	92.9
L0612485-06	1.00	01	92.9	97.5	92.4	95.2
WG230324-01	1.00	01	87.0	91.7	90.1	93.4
WG230324-02	1.00	01	88.3	93.4	87.4	93.5
WG230324-03	1.00	01	88.3	94.3	89.2	93.4

Surrogates	Surrogate Limits		
1 - 1,2-Dichloroethane-d4	80	-	120
2 - Dibromofluoromethane	86	-	118
3 - p-Bromofluorobenzene	86	-	115
4 - Toluene-d8	88	-	110

Underline = Result out of surrogate limits

DL = surrogate diluted out

ND = surrogate not detected

KEMRON FORMS - Modified 09/27/2006
Version 1.5 PDF File ID: 659363
Report generated 01/02/2007 16:01

METHOD BLANK SUMMARY

00095931

Login Number: L0612485
Work Group: WG230324
Blank File ID: 11M39117
Blank Sample ID: WG230324-01
Prep Date: 12/27/06 09:17
Instrument ID: HPMS11
Analyzed Date: 12/27/06 09:17
Method: 8260B
Analyst: CMS

This Method Blank Applies To The Following Samples:

Client ID	Lab Sample ID	Lab File ID	Time Analyzed	TAG
LCS	WG230324-02	11M39118	12/27/06 09:48	01
LCS2	WG230324-03	11M39119	12/27/06 10:19	01
12WW20	L0612485-03	11M39125	12/27/06 13:24	01
12WW24	L0612485-04	11M39126	12/27/06 13:55	01
12WW05	L0612485-05	11M39127	12/27/06 14:26	01
12WW24-QC	L0612485-06	11M39128	12/27/06 14:57	01
12WW01	L0612485-01	11M39130	12/27/06 15:58	01
12WW02	L0612485-02	11M39131	12/27/06 16:29	01

METHOD BLANK SUMMARY

00095932

Login Number: L0612485
Work Group: WG230417
Blank File ID: 11M39144
Blank Sample ID: WG230417-01
Prep Date: 12/28/06 08:40
Instrument ID: HPMS11
Analyzed Date: 12/28/06 08:40
Method: 8260B
Analyst: CMS

This Method Blank Applies To The Following Samples:

Client ID	Lab Sample ID	Lab File ID	Time Analyzed	TAG
LCS	WG230417-02	11M39145	12/28/06 09:11	01
12WW24	L0612485-04	11M39147	12/28/06 10:13	DL01
12WW24-QC	L0612485-06	11M39148	12/28/06 10:43	DL01

METHOD BLANK SUMMARY

00095933

Login Number: L0612485
Work Group: WG230415
Blank File ID: 6M62910
Blank Sample ID: WG230415-01
Prep Date: 12/28/06 08:38
Instrument ID: HPMS6
Analyzed Date: 12/28/06 08:38
Method: 8260B
Analyst: CMS

This Method Blank Applies To The Following Samples:

Client ID	Lab Sample ID	Lab File ID	Time Analyzed	TAG
LCS	WG230415-02	6M62911	12/28/06 09:10	01
LCS2	WG230415-03	6M62912	12/28/06 09:43	01
29WW40	L0612485-07	6M62916	12/28/06 11:52	01

KEMRON Environmental Services

METHOD BLANK REPORT

00095934

Login Number: L0612485 Prep Date: 12/27/06 09:17 Sample ID: WG230324-01
Instrument ID: HPMS11 Run Date: 12/27/06 09:17 Prep Method: 5030B
File ID: 11M39117 Analyst: CMS Method: 8260B
Workgroup (AAB#): WG230324 Matrix: Water Units: ug/L
Contract #: DACA56-94-D-0020 Cal ID: HPMS11-28-NOV-06

Analytes	SQL	PQL	Concentration	Dilution	Qualifier
1,1,1-Trichloroethane	0.250	5.00	0.250	1	U
1,1,2,2-Tetrachloroethane	0.125	5.00	0.125	1	U
1,1,2-Trichloro-1,2,2-Trifluoroethane	0.250	10.0	0.250	1	U
1,1,2-Trichloroethane	0.250	5.00	0.250	1	U
1,1-Dichloroethane	0.125	5.00	0.125	1	U
1,1-Dichloroethene	0.500	5.00	0.500	1	U
1,2,4-Trichlorobenzene	0.200	5.00	0.200	1	U
1,2-Dibromo-3-chloropropane	1.00	5.00	1.00	1	U
1,2-Dibromoethane	0.250	5.00	0.250	1	U
1,2-Dichlorobenzene	0.125	5.00	0.125	1	U
1,2-Dichloroethane	0.250	5.00	0.250	1	U
cis-1,2-Dichloroethene	0.250	10.0	0.250	1	U
trans-1,2-Dichloroethene	0.250	5.00	0.250	1	U
1,2-Dichloropropane	0.200	5.00	0.200	1	U
1,3-Dichlorobenzene	0.250	5.00	0.250	1	U
1,4-Dichlorobenzene	0.125	5.00	0.125	1	U
2-Butanone	2.50	10.0	2.50	1	U
2-Hexanone	2.50	10.0	2.50	1	U
4-Methyl-2-pentanone	2.50	10.0	2.50	1	U
Acetone	2.50	10.0	2.50	1	U
Benzene	0.125	5.00	0.125	1	U
Bromodichloromethane	0.250	5.00	0.250	1	U
Bromoform	0.500	5.00	0.500	1	U
Bromomethane	0.500	10.0	0.500	1	U
Carbon disulfide	0.500	5.00	0.500	1	U
Carbon tetrachloride	0.250	5.00	0.250	1	U
Chlorobenzene	0.125	5.00	0.125	1	U
Chloroethane	0.500	10.0	0.500	1	U
Chloroform	0.125	5.00	0.125	1	U
Chloromethane	0.250	10.0	0.250	1	U
cis-1,3-Dichloropropene	0.250	5.00	0.250	1	U
Cyclohexane	0.250	10.0	0.250	1	U
Dibromochloromethane	0.250	5.00	0.250	1	U
Dichlorodifluoromethane	0.250	10.0	0.250	1	U
Ethyl benzene	0.250	5.00	0.250	1	U
Isopropylbenzene	0.250	5.00	0.250	1	U
Methyl acetate	0.250	10.0	0.250	1	U
Methyl tert-butyl ether	0.500	5.00	0.500	1	U
Methylcyclohexane	0.250	10.0	0.250	1	U
Methylene chloride	0.250	5.00	0.250	1	U
Styrene	0.125	5.00	0.125	1	U
Tetrachloroethene	0.250	5.00	0.250	1	U

KEMRON FORMS - Modified 12/07/2006
Version 1.5 PDF File ID: 659349
Report generated 01/02/2007 16:01

KEMRON Environmental Services

METHOD BLANK REPORT

00095935

Login Number: L0612485 Prep Date: 12/27/06 09:17 Sample ID: WG230324-01
Instrument ID: HPMS11 Run Date: 12/27/06 09:17 Prep Method: 5030B
File ID: 11M39117 Analyst: CMS Method: 8260B
Workgroup (AAB#): WG230324 Matrix: Water Units: ug/L
Contract #: DACA56-94-D-0020 Cal ID: HPMS11-28-NOV-06

Analytes	SQL	PQL	Concentration	Dilution	Qualifier
Toluene	0.250	5.00	0.250	1	U
trans-1,3-Dichloropropene	0.500	5.00	0.500	1	U
Trichloroethene	0.250	5.00	0.250	1	U
Trichlorofluoromethane	0.250	10.0	0.250	1	U
Vinyl chloride	0.250	10.0	0.250	1	U
Xylenes, Total	0.500	5.00	0.500	1	U

Surrogates	% Recovery	Surrogate Limits	Qualifier
1,2-Dichloroethane-d4	87.0	80 - 120	PASS
Dibromofluoromethane	91.7	86 - 118	PASS
p-Bromofluorobenzene	90.1	86 - 115	PASS
Toluene-d8	93.4	88 - 110	PASS

MDL Method Detection Limit
RL Reporting/quantitation Limit

* Analyte concentration > RL

KEMRON FORMS - Modified 12/07/2006
Version 1.5 PDF File ID: 659349
Report generated 01/02/2007 16:01

KEMRON Environmental Services

METHOD BLANK REPORT

00095936

Login Number: L0612485 Prep Date: 12/28/06 08:40 Sample ID: WG230417-01
Instrument ID: HPMS11 Run Date: 12/28/06 08:40 Prep Method: 5030B
File ID: 11M39144 Analyst: CMS Method: 8260B
Workgroup (AAB#): WG230417 Matrix: Water Units: ug/L
Contract #: DACA56-94-D-0020 Cal ID: HPMS11-28-NOV-06

Analytes	SQL	PQL	Concentration	Dilution	Qualifier
1,1,1-Trichloroethane	0.250	5.00	0.250	1	U
1,1,2,2-Tetrachloroethane	0.125	5.00	0.125	1	U
1,1,2-Trichloro-1,2,2-Trifluoroethane	0.250	10.0	0.250	1	U
1,1,2-Trichloroethane	0.250	5.00	0.250	1	U
1,1-Dichloroethane	0.125	5.00	0.125	1	U
1,1-Dichloroethene	0.500	5.00	0.500	1	U
1,2,4-Trichlorobenzene	0.200	5.00	0.200	1	U
1,2-Dibromo-3-chloropropane	1.00	5.00	1.00	1	U
1,2-Dibromoethane	0.250	5.00	0.250	1	U
1,2-Dichlorobenzene	0.125	5.00	0.125	1	U
1,2-Dichloroethane	0.250	5.00	0.250	1	U
cis-1,2-Dichloroethene	0.250	10.0	0.250	1	U
trans-1,2-Dichloroethene	0.250	5.00	0.250	1	U
1,2-Dichloropropane	0.200	5.00	0.200	1	U
1,3-Dichlorobenzene	0.250	5.00	0.250	1	U
1,4-Dichlorobenzene	0.125	5.00	0.125	1	U
2-Butanone	2.50	10.0	2.50	1	U
2-Hexanone	2.50	10.0	2.50	1	U
4-Methyl-2-pentanone	2.50	10.0	2.50	1	U
Acetone	2.50	10.0	2.50	1	U
Benzene	0.125	5.00	0.125	1	U
Bromodichloromethane	0.250	5.00	0.250	1	U
Bromoform	0.500	5.00	0.500	1	U
Bromomethane	0.500	10.0	0.500	1	U
Carbon disulfide	0.500	5.00	0.500	1	U
Carbon tetrachloride	0.250	5.00	0.250	1	U
Chlorobenzene	0.125	5.00	0.125	1	U
Chloroethane	0.500	10.0	0.500	1	U
Chloroform	0.125	5.00	0.125	1	U
Chloromethane	0.250	10.0	0.250	1	U
cis-1,3-Dichloropropene	0.250	5.00	0.250	1	U
Cyclohexane	0.250	10.0	0.250	1	U
Dibromochloromethane	0.250	5.00	0.250	1	U
Dichlorodifluoromethane	0.250	10.0	0.250	1	U
Ethyl benzene	0.250	5.00	0.250	1	U
Isopropylbenzene	0.250	5.00	0.250	1	U
Methyl acetate	0.250	10.0	0.250	1	U
Methyl tert-butyl ether	0.500	5.00	0.500	1	U
Methylcyclohexane	0.250	10.0	0.250	1	U
Methylene chloride	0.250	5.00	0.250	1	U
Styrene	0.125	5.00	0.125	1	U
Tetrachloroethene	0.250	5.00	0.250	1	U

KEMRON FORMS - Modified 12/07/2006
Version 1.5 PDF File ID: 659349
Report generated 01/02/2007 16:01

KEMRON Environmental Services

METHOD BLANK REPORT

00095937

Login Number: L0612485 Prep Date: 12/28/06 08:40 Sample ID: WG230417-01
Instrument ID: HPMS11 Run Date: 12/28/06 08:40 Prep Method: 5030B
File ID: 11M39144 Analyst: CMS Method: 8260B
Workgroup (AAB#): WG230417 Matrix: Water Units: ug/L
Contract #: DACA56-94-D-0020 Cal ID: HPMS11-28-NOV-06

Analytes	SQL	PQL	Concentration	Dilution	Qualifier
Toluene	0.250	5.00	0.250	1	U
trans-1,3-Dichloropropene	0.500	5.00	0.500	1	U
Trichloroethene	0.250	5.00	0.250	1	U
Trichlorofluoromethane	0.250	10.0	0.250	1	U
Vinyl chloride	0.250	10.0	0.250	1	U
Xylenes, Total	0.500	5.00	0.500	1	U

Surrogates	% Recovery	Surrogate Limits	Qualifier
1,2-Dichloroethane-d4	90.0	80 - 120	PASS
Dibromofluoromethane	94.9	86 - 118	PASS
p-Bromofluorobenzene	91.8	86 - 115	PASS
Toluene-d8	94.5	88 - 110	PASS

MDL Method Detection Limit
RL Reporting/quantitation Limit

* Analyte concentration > RL

KEMRON FORMS - Modified 12/07/2006
Version 1.5 PDF File ID: 659349
Report generated 01/02/2007 16:01

KEMRON Environmental Services

METHOD BLANK REPORT

00095938

Login Number:L0612485 Prep Date:12/28/06 08:38 Sample ID:WG230415-01
Instrument ID:HPMS6 Run Date:12/28/06 08:38 Prep Method:5030B
File ID:6M62910 Analyst:CMS Method:8260B
Workgroup (AAB#):WG230415 Matrix:Water Units:ug/L
Contract #:DACA56-94-D-0020 Cal ID: HPMS6-20-NOV-06

Analytes	SQL	PQL	Concentration	Dilution	Qualifier
1,1,1-Trichloroethane	0.250	5.00	0.250	1	U
1,1,2,2-Tetrachloroethane	0.125	5.00	0.125	1	U
1,1,2-Trichloro-1,2,2-Trifluoroethane	0.250	10.0	0.250	1	U
1,1,2-Trichloroethane	0.250	5.00	0.250	1	U
1,1-Dichloroethane	0.125	5.00	0.125	1	U
1,1-Dichloroethene	0.500	5.00	0.500	1	U
1,2,4-Trichlorobenzene	0.200	5.00	0.200	1	U
1,2-Dibromo-3-chloropropane	1.00	5.00	1.00	1	U
1,2-Dibromoethane	0.250	5.00	0.250	1	U
1,2-Dichlorobenzene	0.125	5.00	0.125	1	U
1,2-Dichloroethane	0.250	5.00	0.250	1	U
cis-1,2-Dichloroethene	0.250	10.0	0.250	1	U
trans-1,2-Dichloroethene	0.250	5.00	0.250	1	U
1,2-Dichloropropane	0.200	5.00	0.200	1	U
1,3-Dichlorobenzene	0.250	5.00	0.250	1	U
1,4-Dichlorobenzene	0.125	5.00	0.125	1	U
2-Butanone	2.50	10.0	2.50	1	U
2-Hexanone	2.50	10.0	2.50	1	U
4-Methyl-2-pentanone	2.50	10.0	2.50	1	U
Acetone	2.50	10.0	2.50	1	U
Benzene	0.125	5.00	0.125	1	U
Bromodichloromethane	0.250	5.00	0.250	1	U
Bromoform	0.500	5.00	0.500	1	U
Bromomethane	0.500	10.0	0.500	1	U
Carbon disulfide	0.500	5.00	0.500	1	U
Carbon tetrachloride	0.250	5.00	0.250	1	U
Chlorobenzene	0.125	5.00	0.125	1	U
Chloroethane	0.500	10.0	0.500	1	U
Chloroform	0.125	5.00	0.125	1	U
Chloromethane	0.250	10.0	0.250	1	U
cis-1,3-Dichloropropene	0.250	5.00	0.250	1	U
Cyclohexane	0.250	10.0	0.250	1	U
Dibromochloromethane	0.250	5.00	0.250	1	U
Dichlorodifluoromethane	0.250	10.0	0.250	1	U
Ethyl benzene	0.250	5.00	0.250	1	U
Isopropylbenzene	0.250	5.00	0.250	1	U
Methyl acetate	0.250	10.0	0.250	1	U
Methyl tert-butyl ether	0.500	5.00	0.500	1	U
Methylcyclohexane	0.250	10.0	0.250	1	U
Methylene chloride	0.250	5.00	0.250	1	U
Styrene	0.125	5.00	0.125	1	U
Tetrachloroethene	0.250	5.00	0.250	1	U

KEMRON FORMS - Modified 12/07/2006
Version 1.5 PDF File ID: 659349
Report generated 01/02/2007 16:01

KEMRON Environmental Services

METHOD BLANK REPORT

00095939

Login Number: L0612485 Prep Date: 12/28/06 08:38 Sample ID: WG230415-01
Instrument ID: HPMS6 Run Date: 12/28/06 08:38 Prep Method: 5030B
File ID: 6M62910 Analyst: CMS Method: 8260B
Workgroup (AAB#): WG230415 Matrix: Water Units: ug/L
Contract #: DACA56-94-D-0020 Cal ID: HPMS6-20-NOV-06

Analytes	SQL	PQL	Concentration	Dilution	Qualifier
Toluene	0.250	5.00	0.250	1	U
trans-1,3-Dichloropropene	0.500	5.00	0.500	1	U
Trichloroethene	0.250	5.00	0.250	1	U
Trichlorofluoromethane	0.250	10.0	0.250	1	U
Vinyl chloride	0.250	10.0	0.250	1	U
Xylenes, Total	0.500	5.00	0.500	1	U

Surrogates	% Recovery	Surrogate Limits	Qualifier
1,2-Dichloroethane-d4	87.5	80 - 120	PASS
Dibromofluoromethane	95.7	86 - 118	PASS
p-Bromofluorobenzene	91.8	86 - 115	PASS
Toluene-d8	100	88 - 110	PASS

MDL Method Detection Limit
RL Reporting/quantitation Limit

* Analyte concentration > RL

KEMRON FORMS - Modified 12/07/2006
Version 1.5 PDF File ID: 659349
Report generated 01/02/2007 16:01

KEMRON Environmental Services

LABORATORY CONTROL SAMPLE (LCS)

00095940

Login Number: L0612485 Run Date: 12/28/2006 Sample ID: WG230417-02
Instrument ID: HPMS11 Run Time: 09:11 Prep Method: 5030B
File ID: 11M39145 Analyst: CMS Method: 8260B
Workgroup (AAB#): WG230417 Matrix: Water Units: ug/L
Contract #: DACA56-94-D-0020 Cal ID: HPMS11-28-NOV-06

Analytes	Expected	Found	% Rec	LCS Limits	Q
1,1,1-Trichloroethane	20.0	24.3	121	80 - 134	
1,1,2,2-Tetrachloroethane	20.0	20.1	100	79 - 125	
1,1,2-Trichloro-1,2,2-Trifluoroethane	20.0	21.8	109	80 - 130	
1,1,2-Trichloroethane	20.0	20.9	105	80 - 125	
1,1-Dichloroethane	20.0	20.6	103	80 - 125	
1,1-Dichloroethene	20.0	21.9	110	80 - 132	
1,2,4-Trichlorobenzene	20.0	19.6	97.9	65 - 135	
1,2-Dibromo-3-chloropropane	20.0	18.3	91.4	50 - 130	
1,2-Dibromoethane	20.0	21.2	106	80 - 125	
1,2-Dichlorobenzene	20.0	20.7	103	80 - 125	
1,2-Dichloroethane	20.0	21.9	110	80 - 129	
cis-1,2-Dichloroethene	20.0	21.3	107	70 - 125	
trans-1,2-Dichloroethene	20.0	21.3	106	80 - 127	
1,2-Dichloropropane	20.0	19.5	97.3	80 - 120	
1,3-Dichlorobenzene	20.0	20.6	103	80 - 120	
1,4-Dichlorobenzene	20.0	20.0	100	80 - 120	
2-Butanone	20.0	18.8	93.9	30 - 150	
2-Hexanone	20.0	17.1	85.6	55 - 130	
4-Methyl-2-pentanone	20.0	17.5	87.6	64 - 140	
Acetone	20.0	26.5	132	40 - 142	
Benzene	20.0	20.7	103	80 - 121	
Bromodichloromethane	20.0	24.1	121	80 - 131	
Bromoform	20.0	19.8	99.0	70 - 130	
Bromomethane	20.0	18.7	93.7	30 - 145	
Carbon disulfide	20.0	20.1	101	58 - 138	
Carbon tetrachloride	20.0	25.4	127	65 - 140	
Chlorobenzene	20.0	21.0	105	80 - 120	
Chloroethane	20.0	19.9	99.6	60 - 135	
Chloroform	20.0	22.2	111	80 - 125	
Chloromethane	20.0	21.0	105	40 - 125	
cis-1,3-Dichloropropene	20.0	20.9	104	70 - 130	
Cyclohexane	20.0	19.3	96.5	80 - 130	
Dibromochloromethane	20.0	24.4	122	60 - 135	
Dichlorodifluoromethane	20.0	21.0	105	50 - 133	
Ethyl benzene	20.0	22.4	112	80 - 122	
Isopropylbenzene	20.0	20.3	102	80 - 122	
Methyl acetate	20.0	17.4	86.8	80 - 130	
Methyl tert-butyl ether	20.0	21.9	110	65 - 125	
Methylcyclohexane	20.0	19.9	99.5	80 - 130	
Methylene chloride	20.0	20.5	102	80 - 123	
Styrene	20.0	22.3	111	80 - 123	

KEMRON FORMS - Modified 12/15/2006
Version 1.5 PDF File ID: 662514
Report generated 01/02/2007 16:16

KEMRON Environmental Services

LABORATORY CONTROL SAMPLE (LCS)

00095941

Login Number: L0612485 Run Date: 12/28/2006 Sample ID: WG230417-02
Instrument ID: HPMS11 Run Time: 09:11 Prep Method: 5030B
File ID: 11M39145 Analyst: CMS Method: 8260B
Workgroup (AAB#): WG230417 Matrix: Water Units: ug/L
Contract #: DACA56-94-D-0020 Cal ID: HPMS11-28-NOV-06

Analytes	Expected	Found	% Rec	LCS Limits	Q
Tetrachloroethene	20.0	22.3	112	80 - 124	
Toluene	20.0	21.2	106	80 - 124	
trans-1,3-Dichloropropene	20.0	19.4	96.8	80 - 130	
Trichloroethene	20.0	21.5	108	80 - 122	
Trichlorofluoromethane	20.0	22.2	111	62 - 151	
Vinyl chloride	20.0	22.8	114	65 - 140	
Xylenes, Total	60.0	65.8	110	80 - 121	

Surrogates	% Recovery	Surrogate Limits	Qualifier
1,2-Dichloroethane-d4	91.4	80 - 120	PASS
Dibromofluoromethane	96.0	86 - 118	PASS
p-Bromofluorobenzene	89.7	86 - 115	PASS
Toluene-d8	92.2	88 - 110	PASS

* FAILS %REC LIMIT

KEMRON FORMS - Modified 12/15/2006
Version 1.5 PDF File ID: 662514
Report generated 01/02/2007 16:16

KEMRON Environmental Services

LABORATORY CONTROL SAMPLE (LCS)

00095942

Login Number:L0612485 Analyst:CMS Prep Method:5030B
Instrument ID:HPMS6 Matrix:Water Method:8260B
Workgroup (AAB#):WG230415 Units:ug/L
Sample ID:WG230415-02 LCS File ID:6M62911 Run Date:12/28/2006 09:10
Sample ID:WG230415-03 LCS2 File ID:6M62912 Run Date:12/28/2006 09:43

Analytes	LCS			LCS2			%RPD	%Rec Limits	RPD Lmt	Q
	Known	Found	% REC	Known	Found	% REC				
1,1,1-Trichloroethane	20.0	20.1	101	20.0	20.6	103	2.29	80 - 134	20	
1,1,2,2-Tetrachloroethane	20.0	19.1	95.7	20.0	19.6	98.1	2.50	79 - 125	20	
1,1,2-Trichloro-1,2,2-Trifluoroethane	20.0	19.8	98.9	20.0	20.5	102	3.40	80 - 130	20	
1,1,2-Trichloroethane	20.0	20.3	102	20.0	20.6	103	1.60	80 - 125	20	
1,1-Dichloroethane	20.0	19.6	98.1	20.0	20.0	100	2.05	80 - 125	20	
1,1-Dichloroethene	20.0	19.4	97.0	20.0	20.3	102	4.60	80 - 132	20	
1,2,4-Trichlorobenzene	20.0	20.3	101	20.0	20.7	104	2.33	65 - 135	20	
1,2-Dibromo-3-chloropropane	20.0	20.5	102	20.0	19.0	94.9	7.58	50 - 130	20	
1,2-Dibromoethane	20.0	20.6	103	20.0	20.3	101	1.63	80 - 125	20	
1,2-Dichlorobenzene	20.0	19.8	98.9	20.0	20.2	101	2.09	80 - 125	20	
1,2-Dichloroethane	20.0	19.5	97.3	20.0	19.2	96.2	1.08	80 - 129	20	
cis-1,2-Dichloroethene	20.0	20.3	101	20.0	20.9	104	2.80	70 - 125	20	
trans-1,2-Dichloroethene	20.0	19.8	98.9	20.0	20.8	104	4.91	80 - 127	20	
1,2-Dichloropropane	20.0	18.9	94.7	20.0	19.2	96.1	1.51	80 - 120	20	
1,3-Dichlorobenzene	20.0	19.7	98.7	20.0	20.2	101	2.13	80 - 120	20	
1,4-Dichlorobenzene	20.0	19.4	97.0	20.0	19.8	99.0	2.00	80 - 120	20	
2-Butanone	20.0	24.4	122	20.0	22.8	114	6.51	30 - 150	20	
2-Hexanone	20.0	18.9	94.7	20.0	18.0	89.8	5.28	55 - 130	20	
4-Methyl-2-pentanone	20.0	20.4	102	20.0	19.0	95.0	7.22	64 - 140	20	
Acetone	20.0	24.0	120	20.0	23.3	117	2.78	40 - 142	20	
Benzene	20.0	19.5	97.5	20.0	19.8	99.2	1.74	80 - 121	20	
Bromodichloromethane	20.0	20.8	104	20.0	21.0	105	0.980	80 - 131	20	
Bromoform	20.0	19.5	97.6	20.0	20.0	99.8	2.15	70 - 130	20	
Bromomethane	20.0	19.1	95.3	20.0	19.8	98.8	3.58	30 - 145	20	
Carbon disulfide	20.0	19.4	96.9	20.0	20.3	101	4.52	58 - 138	20	
Carbon tetrachloride	20.0	20.5	102	20.0	21.4	107	4.17	65 - 140	20	
Chlorobenzene	20.0	19.9	99.5	20.0	20.2	101	1.54	80 - 120	20	
Chloroethane	20.0	17.7	88.6	20.0	18.5	92.6	4.43	60 - 135	20	
Chloroform	20.0	19.6	97.9	20.0	20.1	101	2.76	80 - 125	20	
Chloromethane	20.0	19.3	96.5	20.0	20.2	101	4.46	40 - 125	20	
cis-1,3-Dichloropropene	20.0	19.9	99.5	20.0	20.0	100	0.696	70 - 130	20	
Cyclohexane	20.0	19.5	97.5	20.0	20.6	103	5.61	80 - 130	20	
Dibromochloromethane	20.0	21.0	105	20.0	21.3	107	1.40	60 - 135	20	
Dichlorodifluoromethane	20.0	16.7	83.5	20.0	17.4	86.9	4.06	50 - 133	20	
Ethyl benzene	20.0	20.1	101	20.0	20.5	102	1.62	80 - 122	20	
Isopropylbenzene	20.0	18.2	91.0	20.0	18.7	93.4	2.66	80 - 122	20	
Methyl acetate	20.0	19.8	99.0	20.0	19.6	98.2	0.754	80 - 130	20	
Methyl tert-butyl ether	20.0	21.2	106	20.0	21.1	105	0.684	65 - 125	20	
Methylcyclohexane	20.0	20.2	101	20.0	21.3	107	5.29	80 - 130	20	
Methylene chloride	20.0	18.2	91.0	20.0	18.5	92.7	1.83	80 - 123	20	
Styrene	20.0	20.1	101	20.0	20.8	104	3.04	80 - 123	20	
Tetrachloroethene	20.0	20.0	99.9	20.0	20.7	103	3.40	80 - 124	20	

KEMRON FORMS - Modified 07/13/2006
Version 1.5 PDF File ID:659346
Report generated 01/02/2007 16:01

KEMRON Environmental Services

LABORATORY CONTROL SAMPLE (LCS)

00095943

Login Number: L0612485 Analyst: CMS Prep Method: 5030B
Instrument ID: HPMS6 Matrix: Water Method: 8260B
Workgroup (AAB#): WG230415 Units: ug/L
Sample ID: WG230415-02 LCS File ID: 6M62911 Run Date: 12/28/2006 09:10
Sample ID: WG230415-03 LCS2 File ID: 6M62912 Run Date: 12/28/2006 09:43

Analytes	LCS			LCS2			%RPD	%Rec Limits	RPD Lmt	Q
	Known	Found	% REC	Known	Found	% REC				
Toluene	20.0	19.6	97.9	20.0	20.1	100	2.46	80 - 124	20	
trans-1,3-Dichloropropene	20.0	18.9	94.6	20.0	19.0	94.8	0.262	80 - 130	20	
Trichloroethene	20.0	20.7	103	20.0	21.1	106	2.17	80 - 122	20	
Trichlorofluoromethane	20.0	17.3	86.7	20.0	18.1	90.3	4.05	62 - 151	20	
Vinyl chloride	20.0	23.1	115	20.0	24.4	122	5.47	65 - 140	20	
Xylenes, Total	60.0	58.0	96.6	60.0	60.1	100	3.60	80 - 121	20	

Surogates	LCS	LCS2	Surrogate Limits	Qualifier
	% Recovery	% Recovery		
Dibromofluoromethane	96.5	96.7	86 - 118	PASS
1,2-Dichloroethane-d4	88.8	88.7	80 - 120	PASS
Toluene-d8	99.9	100	88 - 110	PASS
p-Bromofluorobenzene	93.5	92.7	86 - 115	PASS

* FAILS %REC LIMIT

\# FAILS RPD LIMIT

KEMRON FORMS - Modified 07/13/2006
Version 1.5 PDF File ID: 659346
Report generated 01/02/2007 16:01

KEMRON Environmental Services

LABORATORY CONTROL SAMPLE (LCS)

00095944

Login Number:L0612485 Analyst:CMS Prep Method:5030B
Instrument ID:HPMS11 Matrix:Water Method:8260B
Workgroup (AAB#):WG230324 Units:ug/L
Sample ID:WG230324-02 LCS File ID:11M39118 Run Date:12/27/2006 09:48
Sample ID:WG230324-03 LCS2 File ID:11M39119 Run Date:12/27/2006 10:19

Analytes	LCS			LCS2			%RPD	%Rec Limits	RPD Lmt	Q
	Known	Found	% REC	Known	Found	% REC				
1,1,1-Trichloroethane	20.0	22.0	110	20.0	22.7	114	3.26	80 - 134	20	
1,1,2,2-Tetrachloroethane	20.0	19.3	96.4	20.0	19.8	99.2	2.89	79 - 125	20	
1,1,2-Trichloro-1,2,2-Trifluoroethane	20.0	21.5	108	20.0	21.7	108	0.497	80 - 130	20	
1,1,2-Trichloroethane	20.0	20.8	104	20.0	20.8	104	0.112	80 - 125	20	
1,1-Dichloroethane	20.0	19.5	97.4	20.0	20.4	102	4.49	80 - 125	20	
1,1-Dichloroethene	20.0	20.4	102	20.0	21.6	108	5.32	80 - 132	20	
1,2,4-Trichlorobenzene	20.0	18.5	92.3	20.0	19.6	97.9	5.83	65 - 135	20	
1,2-Dibromo-3-chloropropane	20.0	17.8	88.8	20.0	17.8	89.1	0.337	50 - 130	20	
1,2-Dibromoethane	20.0	20.6	103	20.0	20.4	102	0.621	80 - 125	20	
1,2-Dichlorobenzene	20.0	19.4	96.9	20.0	20.4	102	5.03	80 - 125	20	
1,2-Dichloroethane	20.0	20.5	103	20.0	20.7	104	0.915	80 - 129	20	
cis-1,2-Dichloroethene	20.0	20.5	103	20.0	21.6	108	5.24	70 - 125	20	
trans-1,2-Dichloroethene	20.0	20.3	101	20.0	21.4	107	5.51	80 - 127	20	
1,2-Dichloropropane	20.0	18.8	93.8	20.0	19.8	99.2	5.57	80 - 120	20	
1,3-Dichlorobenzene	20.0	19.6	97.8	20.0	20.5	102	4.43	80 - 120	20	
1,4-Dichlorobenzene	20.0	18.8	94.1	20.0	19.9	99.5	5.58	80 - 120	20	
2-Butanone	20.0	18.9	94.7	20.0	19.1	95.4	0.803	30 - 150	20	
2-Hexanone	20.0	16.8	83.9	20.0	17.1	85.6	2.01	55 - 130	20	
4-Methyl-2-pentanone	20.0	17.9	89.3	20.0	18.1	90.5	1.33	64 - 140	20	
Acetone	20.0	24.8	124	20.0	26.9	134	7.90	40 - 142	20	
Benzene	20.0	19.7	98.3	20.0	20.7	104	5.14	80 - 121	20	
Bromodichloromethane	20.0	22.5	113	20.0	23.1	116	2.66	80 - 131	20	
Bromoform	20.0	18.8	94.0	20.0	18.7	93.5	0.480	70 - 130	20	
Bromomethane	20.0	18.6	92.8	20.0	20.3	102	8.97	30 - 145	20	
Carbon disulfide	20.0	20.2	101	20.0	21.5	107	6.09	58 - 138	20	
Carbon tetrachloride	20.0	22.8	114	20.0	23.4	117	2.45	65 - 140	20	
Chlorobenzene	20.0	20.2	101	20.0	20.8	104	3.03	80 - 120	20	
Chloroethane	20.0	18.9	94.5	20.0	20.1	100	5.98	60 - 135	20	
Chloroform	20.0	20.5	103	20.0	21.4	107	4.40	80 - 125	20	
Chloromethane	20.0	18.7	93.4	20.0	20.9	104	11.1	40 - 125	20	
cis-1,3-Dichloropropene	20.0	20.1	100	20.0	20.9	104	4.06	70 - 130	20	
Cyclohexane	20.0	18.7	93.7	20.0	19.0	94.9	1.29	80 - 130	20	
Dibromochloromethane	20.0	22.9	115	20.0	23.0	115	0.496	60 - 135	20	
Dichlorodifluoromethane	20.0	20.5	102	20.0	20.1	101	1.72	50 - 133	20	
Ethyl benzene	20.0	21.0	105	20.0	22.0	110	4.60	80 - 122	20	
Isopropylbenzene	20.0	18.9	94.4	20.0	19.6	98.0	3.80	80 - 122	20	
Methyl acetate	20.0	17.2	86.1	20.0	17.0	85.1	1.11	80 - 130	20	
Methyl tert-butyl ether	20.0	22.3	112	20.0	21.8	109	2.32	65 - 125	20	
Methylcyclohexane	20.0	19.3	96.5	20.0	19.6	97.8	1.36	80 - 130	20	
Methylene chloride	20.0	20.2	101	20.0	20.6	103	2.03	80 - 123	20	
Styrene	20.0	21.3	107	20.0	22.2	111	3.96	80 - 123	20	
Tetrachloroethene	20.0	20.8	104	20.0	21.5	108	3.62	80 - 124	20	

KEMRON FORMS - Modified 07/13/2006
Version 1.5 PDF File ID:659346
Report generated 01/02/2007 16:01

KEMRON Environmental Services

LABORATORY CONTROL SAMPLE (LCS)

00095945

Login Number: L0612485 Analyst: CMS Prep Method: 5030B
Instrument ID: HPMS11 Matrix: Water Method: 8260B
Workgroup (AAB#): WG230324 Units: ug/L
Sample ID: WG230324-02 LCS File ID: 11M39118 Run Date: 12/27/2006 09:48
Sample ID: WG230324-03 LCS2 File ID: 11M39119 Run Date: 12/27/2006 10:19

Analytes	LCS			LCS2			%RPD	%Rec Limits	RPD Lmt	Q
	Known	Found	% REC	Known	Found	% REC				
Toluene	20.0	20.2	101	20.0	21.1	105	4.15	80 - 124	20	
trans-1,3-Dichloropropene	20.0	19.0	94.9	20.0	18.9	94.4	0.485	80 - 130	20	
Trichloroethene	20.0	20.4	102	20.0	21.3	107	4.55	80 - 122	20	
Trichlorofluoromethane	20.0	20.0	100	20.0	20.2	101	1.19	62 - 151	20	
Vinyl chloride	20.0	20.8	104	20.0	21.1	106	1.51	65 - 140	20	
Xylenes, Total	60.0	62.3	104	60.0	65.0	108	4.27	80 - 121	20	

Surogates	LCS	LCS2	Surrogate Limits	Qualifier
	% Recovery	% Recovery		
Dibromofluoromethane	93.4	94.3	86 - 118	PASS
1,2-Dichloroethane-d4	88.3	88.3	80 - 120	PASS
Toluene-d8	93.5	93.4	88 - 110	PASS
p-Bromofluorobenzene	87.4	89.2	86 - 115	PASS

* FAILS %REC LIMIT

FAILS RPD LIMIT

KEMRON FORMS - Modified 07/13/2006
Version 1.5 PDF File ID: 659346
Report generated 01/02/2007 16:01

KEMRON ENVIRONMENTAL SERVICES
ORGANIC INSTRUMENT CHECK

BFB

Login Number: L0612485 Tune ID: WG227929-01
Instrument: HPMS6 Run Date: 11/20/2006
Analyst: CMS Run Time: 09:10
Workgroup: WG227929 File ID: 6M62037
Cal ID: HPMS6-20-NOV-06

Target	Rel. to	Lower	Upper	Rel.	Raw	Result
50.0	95.0	15.0	40.0	16.9	15096	PASS
75.0	95.0	30.0	60.0	46.8	41874	PASS
95.0	95.0	100	100	100	89392	PASS
96.0	95.0	5.00	9.00	6.56	5867	PASS
173	174	0	2.00	0.431	308	PASS
174	95.0	50.0	100	80.0	71482	PASS
175	174	5.00	9.00	7.31	5227	PASS
176	174	95.0	101	97.6	69736	PASS
177	176	5.00	9.00	7.20	5018	PASS

This check relates to the following samples, MS, MSD:

Lab ID	Client ID	Tag	Date Analyzed	Q
WG227929-02	STD	01	11/20/2006 09:38	
WG227929-03	STD	01	11/20/2006 10:10	
WG227929-04	STD	01	11/20/2006 10:43	
WG227929-05	STD	01	11/20/2006 11:15	
WG227929-06	STD	01	11/20/2006 11:47	
WG227929-07	STD	01	11/20/2006 12:19	
WG227929-08	STD-CCV	01	11/20/2006 12:52	
WG227929-09	STD	01	11/20/2006 13:24	
WG227929-10	STD	01	11/20/2006 13:57	
WG227929-11	STD	01	11/20/2006 14:29	
WG227929-12	SSCV	01	11/20/2006 17:01	

* Sample past 12 hour tune limit

KEMRON FORMS - Modified 12/28/2006
Version 1.3 PDF File ID: 659355
Report generated 01/02/2007 16:01

KEMRON ENVIRONMENTAL SERVICES
ORGANIC INSTRUMENT CHECK

BFB

Login Number: L0612485
Instrument: HPMS11
Analyst: CMS
Workgroup: WG228336

Tune ID: WG228336-01
Run Date: 11/28/2006
Run Time: 08:17
File ID: 11M38434
Cal ID: HPMS11-28-NOV-06

Target	Rel. to	Lower	Upper	Rel.	Raw	Result
50.0	95.0	15.0	40.0	24.4	9619	PASS
75.0	95.0	30.0	60.0	47.3	18658	PASS
95.0	95.0	100	100	100	39434	PASS
96.0	95.0	5.00	9.00	7.22	2849	PASS
173	174	0	2.00	0	0	PASS
174	95.0	50.0	100	79.9	31501	PASS
175	174	5.00	9.00	7.40	2330	PASS
176	174	95.0	101	95.4	30066	PASS
177	176	5.00	9.00	6.99	2102	PASS

This check relates to the following samples, MS, MSD:

Lab ID	Client ID	Tag	Date Analyzed	Q
WG228336-02	STD	01	11/28/2006 08:46	
WG228336-03	STD	01	11/28/2006 09:17	
WG228336-04	STD	01	11/28/2006 09:51	
WG228336-05	STD	01	11/28/2006 10:22	
WG228336-06	STD	01	11/28/2006 10:53	
WG228336-07	STD	01	11/28/2006 11:24	
WG228336-08	STD-CCV	01	11/28/2006 11:54	
WG228336-09	STD	01	11/28/2006 12:25	
WG228336-10	STD	01	11/28/2006 12:56	
WG228336-11	SSCV	01	11/28/2006 14:28	

* Sample past 12 hour tune limit

KEMRON FORMS - Modified 12/28/2006
Version 1.3 PDF File ID: 659355
Report generated 01/02/2007 16:01

KEMRON ENVIRONMENTAL SERVICES
ORGANIC INSTRUMENT CHECK

BFB

Login Number: L0612485
Instrument: HPMS11
Analyst: CMS
Workgroup: WG230323

Tune ID: WG230323-01
Run Date: 12/27/2006
Run Time: 08:19
File ID: 11M39115
Cal ID: HPMS11-28-NOV-06

Target	Rel. to	Lower	Upper	Rel.	Raw	Result
50.0	95.0	15.0	40.0	24.6	5140	PASS
75.0	95.0	30.0	60.0	48.8	10202	PASS
95.0	95.0	100	100	100	20925	PASS
96.0	95.0	5.00	9.00	7.34	1536	PASS
173	174	0	2.00	0	0	PASS
174	95.0	50.0	100	83.6	17500	PASS
175	174	5.00	9.00	7.76	1358	PASS
176	174	95.0	101	97.3	17031	PASS
177	176	5.00	9.00	7.65	1303	PASS

This check relates to the following CCV:

Lab ID	Client ID	Date Analyzed	
WG230323-02	CCV	12/27/2006 08:46	

This check relates to the following samples & batch QC:

Lab ID	Client ID	Tag	Date Analyzed	Q
WG230324-01	BLANK	01	12/27/2006 09:17	
WG230324-02	LCS	01	12/27/2006 09:48	
WG230324-03	LCS2	01	12/27/2006 10:19	
L0612485-03	12WW20	01	12/27/2006 13:24	
L0612485-04	12WW24	01	12/27/2006 13:55	
L0612485-05	12WW05	01	12/27/2006 14:26	
L0612485-06	12WW24-QC	01	12/27/2006 14:57	
L0612485-01	12WW01	01	12/27/2006 15:58	
L0612485-02	12WW02	01	12/27/2006 16:29	

* Sample past 12 hour tune limit

KEMRON FORMS - Modified 12/07/2006
Version 1.3 PDF File ID: 659357
Report generated 01/02/2007 16:01

KEMRON ENVIRONMENTAL SERVICES
ORGANIC INSTRUMENT CHECK

BFB

Login Number: L0612485
Instrument: HPMS11
Analyst: CMS
Workgroup: WG230416

Tune ID: WG230416-01
Run Date: 12/28/2006
Run Time: 07:36
File ID: 11M39142
Cal ID: HPMS11-28-NOV-06

Target	Rel. to	Lower	Upper	Rel.	Raw	Result
50.0	95.0	15.0	40.0	26.1	7663	PASS
75.0	95.0	30.0	60.0	47.9	14077	PASS
95.0	95.0	100	100	100	29365	PASS
96.0	95.0	5.00	9.00	6.70	1966	PASS
173	174	0	2.00	0	0	PASS
174	95.0	50.0	100	79.5	23344	PASS
175	174	5.00	9.00	7.57	1768	PASS
176	174	95.0	101	101	23533	PASS
177	176	5.00	9.00	7.12	1675	PASS

This check relates to the following CCV:

Lab ID	Client ID	Date Analyzed	
WG230416-02	CCV	12/28/2006 08:09	

This check relates to the following samples & batch QC:

Lab ID	Client ID	Tag	Date Analyzed	Q
WG230417-01	BLANK	01	12/28/2006 08:40	
WG230417-02	LCS	01	12/28/2006 09:11	
L0612485-04	12WW24	DL01	12/28/2006 10:13	
L0612485-06	12WW24-QC	DL01	12/28/2006 10:43	

* Sample past 12 hour tune limit

KEMRON FORMS - Modified 12/07/2006
Version 1.3 PDF File ID: 659357
Report generated 01/02/2007 16:01

KEMRON ENVIRONMENTAL SERVICES
ORGANIC INSTRUMENT CHECK

BFB

Login Number: L0612485
Instrument: HPMS6
Analyst: CMS
Workgroup: WG230414

Tune ID: WG230414-01
Run Date: 12/28/2006
Run Time: 07:35
File ID: 6M62908
Cal ID: HPMS6 -20-NOV-06

Target	Rel. to	Lower	Upper	Rel.	Raw	Result
50.0	95.0	15.0	40.0	16.8	7672	PASS
75.0	95.0	30.0	60.0	45.8	20920	PASS
95.0	95.0	100	100	100	45720	PASS
96.0	95.0	5.00	9.00	6.82	3119	PASS
173	174	0	2.00	0	0	PASS
174	95.0	50.0	100	85.9	39269	PASS
175	174	5.00	9.00	7.15	2806	PASS
176	174	95.0	101	96.5	37904	PASS
177	176	5.00	9.00	7.69	2914	PASS

This check relates to the following CCV:

Lab ID	Client ID	Date Analyzed	
WG230414-02	CCV	12/28/2006 08:05	

This check relates to the following samples & batch QC:

Lab ID	Client ID	Tag	Date Analyzed	Q
WG230415-01	BLANK	01	12/28/2006 08:38	
WG230415-02	LCS	01	12/28/2006 09:10	
WG230415-03	LCS2	01	12/28/2006 09:43	
L0612485-07	29WW40	01	12/28/2006 11:52	

* Sample past 12 hour tune limit

KEMRON FORMS - Modified 12/07/2006
Version 1.3 PDF File ID: 659357
Report generated 01/02/2007 16:01

KEMRON Environmental Services

INITIAL CALIBRATION SUMMARY

00095951

Login Number: L0612485 **Instrument ID:** HPMS11

Analytical Method: 8260B **Initial Calibration Date:** 28-NOV-06 12:56

ICAL Workgroup: WG228336 **Column ID:** F

Analyte		AVG RF	% RSD	LINEAR (R)	QUAD(R^2)
1,1-Dichloroethene	CCC	0.2019	11.3		
1,2-Dichloropropane	CCC	0.2522	3.65		
Chloroform	CCC	0.4299	4.96		
Ethylbenzene	CCC	0.4690	7.86		
Toluene	CCC	1.282	4.57		
Vinyl Chloride	CCC	0.1970	16.4		1.00
1,1,2,2-Tetrachloroethane	SPCC	0.3892	7.04		
1,1-Dichloroethane	SPCC	0.4856	5.73		
Bromoform	SPCC	0.1547	15.1	1.00	
Chlorobenzene	SPCC	0.8716	7.32		
Chloromethane	SPCC	0.2693	10.6		
1,1,1-Trichloroethane		0.3873	8.40		
1,1,2-Trichloro-1,2,2-Trifluoroethane		0.2217	6.29		
1,1,2-Trichloroethane		0.2039	4.71		
1,2,4-Trichlorobenzene		0.8978	6.07		
1,2-Dibromo-3-Chloropropane		0.07050	16.5	1.00	
1,2-Dibromoethane		0.2039	7.70		
1,2-Dichlorobenzene		1.224	4.40		
1,2-Dichloroethane		0.3402	3.70		
1,3-Dichlorobenzene		1.368	5.30		
1,4-Dichlorobenzene		1.442	7.40		
2-Butanone		0.05724	10.5		
2-Hexanone		0.1286	9.32		
4-Methyl-2-Pentanone		0.05888	9.23		
Acetone		0.03620	6.62		
Benzene		0.8986	4.44		
Bromodichloromethane		0.2938	6.41		
Bromomethane		0.1823	6.23		
Carbon Disulfide		0.6362	5.08		
Carbon Tetrachloride		0.3371	12.1		
Chloroethane		0.1800	7.15		
Cyclohexane		0.4939	7.33		
Dibromochloromethane		0.2512	11.4		
Dichlorodifluoromethane		0.3206	5.00		
Isopropylbenzene		1.439	8.71		
Methyl Tert Butyl Ether		0.4485	12.3		
Methyl acetate		0.1238	7.66		
Methylcyclohexane		0.3547	7.57		
Methylene Chloride		0.2154	2.99		
Styrene		0.9223	12.1		
Tetrachloroethene		0.2631	7.84		
Trichloroethene		0.2411	6.51		
Trichlorofluoromethane		0.4454	5.16		
cis-1,2-Dichloroethene		0.2432	6.00		
cis-1,3-Dichloropropene		0.3434	8.21		

KEMRON FORMS - Modified 12/13/2006
Version 1.5 PDF File ID: 659351
Report generated 01/02/2007 16:01

KEMRON Environmental Services

INITIAL CALIBRATION SUMMARY

00095952

Login Number: L0612485 **Instrument ID:** HPMS11

Analytical Method: 8260B **Initial Calibration Date:** 28-NOV-06 12:56

ICAL Workgroup: WG228336 **Column ID:** F

Analyte		AVG RF	% RSD	LINEAR (R)	QUAD(R^2)
m-,p-Xylene		0.5810	7.47		
o-Xylene		0.5598	7.17		
trans-1,2-Dichloroethene		0.2269	6.54		
trans-1,3-Dichloropropene		0.4062	8.00		

R = Correlation coefficient; 0.995 minimum

R^2 = Coefficient of determination; 0.99 minimum

KEMRON FORMS - Modified 12/13/2006
Version 1.5 PDF File ID: 659351
Report generated 01/02/2007 16:01

KEMRON Environmental Services

INITIAL CALIBRATION SUMMARY

00095953

Login Number: L0612485 **Instrument ID:** HPMS6

Analytical Method: 8260B **Initial Calibration Date:** 20-NOV-06 14:29

ICAL Workgroup: WG227929 **Column ID:** F

Analyte		AVG RF	% RSD	LINEAR (R)	QUAD(R^2)
1,1-Dichloroethene	CCC	0.3687	8.53		
1,2-Dichloropropane	CCC	0.2202	3.32		
Chloroform	CCC	0.4926	5.02		
Ethylbenzene	CCC	0.5103	4.71		
Toluene	CCC	1.363	6.40		
Vinyl Chloride	CCC	0.1997	20.0		0.998
1,1,2,2-Tetrachloroethane	SPCC	0.3881	3.61		
1,1-Dichloroethane	SPCC	0.4314	3.44		
Bromoform	SPCC	0.1947	13.0		
Chlorobenzene	SPCC	0.9475	3.45		
Chloromethane	SPCC	0.2482	13.7		
1,1,1-Trichloroethane		0.4614	6.12		
1,1,2-Trichloro-1,2,2-Trifluoroethane		0.2586	6.24		
1,1,2-Trichloroethane		0.2161	3.41		
1,2,4-Trichlorobenzene		0.9889	4.22		
1,2-Dibromo-3-Chloropropane		0.07790	10.6		
1,2-Dibromoethane		0.2319	4.78		
1,2-Dichlorobenzene		1.309	4.19		
1,2-Dichloroethane		0.3374	5.60		
1,3-Dichlorobenzene		1.451	3.00		
1,4-Dichlorobenzene		1.503	6.66		
2-Butanone		0.04788	1.66		
2-Hexanone		0.09810	4.47		
4-Methyl-2-Pentanone		0.04460	5.92		
Acetone		0.03507	9.44		
Benzene		0.9358	4.87		
Bromodichloromethane		0.3451	3.26		
Bromomethane		0.1516	21.0		1.00
Carbon Disulfide		0.6606	8.93		
Carbon Tetrachloride		0.4045	7.51		
Chloroethane		0.1672	7.84		
Cyclohexane		0.3465	13.3		
Dibromochloromethane		0.3004	7.74		
Dichlorodifluoromethane		0.3626	7.52		
Isopropylbenzene		1.605	4.73		
Methyl Tert Butyl Ether		0.5230	3.34		
Methyl acetate		0.08881	7.43		
Methylcyclohexane		0.3874	12.0		
Methylene Chloride		0.2574	12.5		
Styrene		1.026	4.63		
Tetrachloroethene		0.3946	5.46		
Trichloroethene		0.2779	4.40		
Trichlorofluoromethane		0.5346	2.07		
cis-1,2-Dichloroethene		0.2682	2.97		
cis-1,3-Dichloropropene		0.3818	6.85		

KEMRON FORMS - Modified 12/13/2006
Version 1.5 PDF File ID: 659351
Report generated 01/02/2007 16:01

KEMRON Environmental Services

INITIAL CALIBRATION SUMMARY

00095954

Login Number: L0612485
Analytical Method: 8260B
ICAL Workgroup: WG227929

Instrument ID: HPMS6
Initial Calibration Date: 20-NOV-06 14:29
Column ID: F

Analyte		AVG RF	% RSD	LINEAR (R)	QUAD(R^2)
m-,p-Xylene		0.6332	4.93		
o-Xylene		0.6121	3.39		
trans-1,2-Dichloroethene		0.2522	6.99		
trans-1,3-Dichloropropene		0.4394	8.37		

R = Correlation coefficient; 0.995 minimum
R^2 = Coefficient of determination; 0.99 minimum

INITIAL CALIBRATION DATA

00095955

Login Number: L0612485 **Instrument ID:** HPMS11

Analytical Method: 8260B **Initial Calibration Date:** 28-NOV-06 12:56

Column ID: F

Analyte	WG228336-02			WG228336-03			WG228336-04		
	CONC	RESP	RF	CONC	RESP	RF	CONC	RESP	RF
1,1-Dichloroethene	NA	NA	NA	0.400	2638.00000	0.1722	1.00	6208.00000	0.1617
1,2-Dichloropropane	NA	NA	NA	0.400	4064.00000	0.2653	1.00	8991.00000	0.2342
Chloroform	0.300	5269.00000	0.4327	0.400	7026.00000	0.4587	1.00	14589.0000	0.3801
Ethylbenzene	NA	NA	NA	0.400	5658.00000	0.4909	1.00	12118.0000	0.4248
Toluene	NA	NA	NA	0.400	14925.0000	1.295	1.00	33167.0000	1.163
Vinyl Chloride	NA	NA	NA	0.400	3983.00000	0.2600	1.00	7979.00000	0.2079
1,1,2,2-Tetrachloroethane	NA	NA	NA	0.400	2201.00000	0.3517	1.00	5526.00000	0.3566
1,1-Dichloroethane	NA	NA	NA	0.400	7750.00000	0.5060	1.00	16215.0000	0.4224
Bromoform	NA	NA	NA	NA	NA	NA	1.00	3601.00000	0.1262
Chlorobenzene	NA	NA	NA	0.400	10874.0000	0.9435	1.00	24420.0000	0.8561
Chloromethane	NA	NA	NA	0.400	5142.00000	0.3357	1.00	10659.0000	0.2777
1,1,1-Trichloroethane	NA	NA	NA	0.400	5578.00000	0.3642	1.00	12311.0000	0.3207
1,1,2-Trichloro-1,2,2-Trifluoroethane	NA	NA	NA	0.400	3037.00000	0.1983	1.00	7802.00000	0.2033
1,1,2-Trichloroethane	NA	NA	NA	0.400	2099.00000	0.1821	1.00	5772.00000	0.2023
1,2,4-Trichlorobenzene	NA	NA	NA	0.400	6073.00000	0.9703	1.00	13317.0000	0.8594
1,2-Dibromo-3-Chloropropane	NA	NA	NA	NA	NA	NA	NA	NA	NA
1,2-Dibromoethane	NA	NA	NA	0.400	2194.00000	0.1904	1.00	5102.00000	0.1789
1,2-Dichlorobenzene	0.300	6192.00000	1.314	0.400	7700.00000	1.230	1.00	18156.0000	1.172
1,2-Dichloroethane	NA	NA	NA	0.400	5430.00000	0.3545	1.00	12476.0000	0.3250
1,3-Dichlorobenzene	NA	NA	NA	0.400	9160.00000	1.464	1.00	19716.0000	1.272
1,4-Dichlorobenzene	0.300	7554.00000	1.603	0.400	9973.00000	1.593	1.00	22328.0000	1.441
2-Butanone	NA	NA	NA	NA	NA	NA	NA	NA	NA
2-Hexanone	NA	NA	NA	NA	NA	NA	NA	NA	NA
4-Methyl-2-Pentanone	NA	NA	NA	NA	NA	NA	NA	NA	NA
Acetone	NA	NA	NA	NA	NA	NA	NA	NA	NA
Benzene	NA	NA	NA	0.400	14662.0000	0.9572	1.00	31806.0000	0.8286
Bromodichloromethane	NA	NA	NA	0.400	4340.00000	0.2833	1.00	9949.00000	0.2592
Bromomethane	NA	NA	NA	0.400	3106.00000	0.2028	1.00	6838.00000	0.1781
Carbon Disulfide	NA	NA	NA	0.400	9356.00000	0.6108	1.00	22187.0000	0.5780
Carbon Tetrachloride	NA	NA	NA	0.400	4275.00000	0.2791	1.00	10302.0000	0.2684
Chloroethane	NA	NA	NA	0.400	2400.00000	0.1567	1.00	6289.00000	0.1638
Cyclohexane	NA	NA	NA	NA	NA	NA	1.00	16138.0000	0.4204
Dibromochloromethane	NA	NA	NA	0.400	2427.00000	0.2106	1.00	6216.00000	0.2179
Dichlorodifluoromethane	NA	NA	NA	0.400	4840.00000	0.3160	1.00	11335.0000	0.2953
Isopropylbenzene	NA	NA	NA	0.400	15319.0000	1.329	1.00	34052.0000	1.194
Methyl Tert Butyl Ether	NA	NA	NA	0.400	5589.00000	0.3649	1.00	14735.0000	0.3839
Methyl acetate	NA	NA	NA	NA	NA	NA	NA	NA	NA
Methylcyclohexane	NA	NA	NA	NA	NA	NA	1.00	11538.0000	0.3006
Methylene Chloride	NA	NA	NA	0.400	3495.00000	0.2282	1.00	8162.00000	0.2126
Styrene	NA	NA	NA	0.400	8914.00000	0.7734	1.00	21802.0000	0.7643
Tetrachloroethene	NA	NA	NA	0.400	2760.00000	0.2395	1.00	6524.00000	0.2287
Trichloroethene	NA	NA	NA	0.400	3656.00000	0.2387	1.00	7965.00000	0.2075

INITIAL CALIBRATION DATA

00095956

Login Number: L0612485 **Instrument ID:** HPMS11

Analytical Method: 8260B **Initial Calibration Date:** 28-NOV-06 12:56

Column ID: F

Analyte	WG228336-05			WG228336-06			WG228336-07		
	CONC	RESP	RF	CONC	RESP	RF	CONC	RESP	RF
1,1-Dichloroethene	2.00	15100.0000	0.1989	5.00	38380.0000	0.2145	20.0	163025.000	0.2123
1,2-Dichloropropane	2.00	18787.0000	0.2475	5.00	45014.0000	0.2516	20.0	196515.000	0.2559
Chloroform	2.00	32789.0000	0.4320	5.00	75591.0000	0.4225	20.0	337125.000	0.4390
Ethylbenzene	2.00	27250.0000	0.4791	5.00	72787.0000	0.5116	20.0	288028.000	0.4985
Toluene	2.00	73212.0000	1.287	5.00	184739.000	1.298	20.0	770264.000	1.333
Vinyl Chloride	2.00	16395.0000	0.2160	5.00	35010.0000	0.1957	20.0	143504.000	0.1869
1,1,2,2-Tetrachloroethane	2.00	11214.0000	0.3611	5.00	31566.0000	0.4028	20.0	130514.000	0.4085
1,1-Dichloroethane	2.00	35738.0000	0.4709	5.00	88036.0000	0.4920	20.0	382244.000	0.4977
Bromoform	2.00	6920.00000	0.1217	5.00	20790.0000	0.1461	20.0	95514.0000	0.1653
Chlorobenzene	2.00	50737.0000	0.8920	5.00	132574.000	0.9318	20.0	521777.000	0.9030
Chloromethane	2.00	19427.0000	0.2560	5.00	47035.0000	0.2629	20.0	201519.000	0.2624
1,1,1-Trichloroethane	2.00	29867.0000	0.3935	5.00	72717.0000	0.4064	20.0	319296.000	0.4158
1,1,2-Trichloro-1,2,2-Trifluoroethane	2.00	17800.0000	0.2345	5.00	39441.0000	0.2204	20.0	178364.000	0.2323
1,1,2-Trichloroethane	2.00	11589.0000	0.2038	5.00	29531.0000	0.2076	20.0	120583.000	0.2087
1,2,4-Trichlorobenzene	2.00	27076.0000	0.8719	5.00	72339.0000	0.9230	20.0	300436.000	0.9402
1,2-Dibromo-3-Chloropropane	2.00	1487.00000	0.04790	5.00	5500.00000	0.07020	20.0	22846.0000	0.07150
1,2-Dibromoethane	2.00	10745.0000	0.1889	5.00	29388.0000	0.2066	20.0	123961.000	0.2145
1,2-Dichlorobenzene	2.00	37502.0000	1.208	5.00	98763.0000	1.260	20.0	402550.000	1.260
1,2-Dichloroethane	2.00	25081.0000	0.3305	5.00	61253.0000	0.3423	20.0	269401.000	0.3508
1,3-Dichlorobenzene	2.00	42809.0000	1.379	5.00	111477.000	1.423	20.0	452584.000	1.416
1,4-Dichlorobenzene	2.00	44017.0000	1.418	5.00	114552.000	1.462	20.0	458105.000	1.434
2-Butanone	NA	NA	NA	5.00	8605.00000	0.04810	20.0	42058.0000	0.05480
2-Hexanone	NA	NA	NA	5.00	15357.0000	0.1079	20.0	74171.0000	0.1284
4-Methyl-2-Pentanone	NA	NA	NA	5.00	8927.00000	0.04990	20.0	44317.0000	0.05770
Acetone	NA	NA	NA	5.00	5962.00000	0.03330	20.0	26959.0000	0.03510
Benzene	2.00	67889.0000	0.8945	5.00	163339.000	0.9129	20.0	704597.000	0.9175
Bromodichloromethane	2.00	21066.0000	0.2776	5.00	53466.0000	0.2988	20.0	237386.000	0.3091
Bromomethane	2.00	12920.0000	0.1702	5.00	29842.0000	0.1668	20.0	138637.000	0.1805
Carbon Disulfide	2.00	48832.0000	0.6434	5.00	110617.000	0.6182	20.0	506941.000	0.6601
Carbon Tetrachloride	2.00	25572.0000	0.3369	5.00	63312.0000	0.3538	20.0	278976.000	0.3633
Chloroethane	2.00	14119.0000	0.1860	5.00	32187.0000	0.1799	20.0	141662.000	0.1845
Cyclohexane	2.00	38622.0000	0.5089	5.00	86412.0000	0.4829	20.0	401139.000	0.5223
Dibromochloromethane	2.00	13038.0000	0.2292	5.00	35612.0000	0.2503	20.0	155471.000	0.2691
Dichlorodifluoromethane	2.00	25890.0000	0.3411	5.00	60359.0000	0.3373	20.0	253053.000	0.3295
Isopropylbenzene	2.00	81757.0000	1.437	5.00	216906.000	1.525	20.0	888765.000	1.538
Methyl Tert Butyl Ether	2.00	33844.0000	0.4459	5.00	74360.0000	0.4156	20.0	366717.000	0.4775
Methyl acetate	2.00	8610.00000	0.1134	5.00	19897.0000	0.1112	20.0	95077.0000	0.1238
Methylcyclohexane	2.00	26928.0000	0.3548	5.00	61437.0000	0.3434	20.0	285086.000	0.3712
Methylene Chloride	2.00	15895.0000	0.2094	5.00	39071.0000	0.2184	20.0	164366.000	0.2140
Styrene	2.00	48279.0000	0.8488	5.00	140615.000	0.9883	20.0	593303.000	1.027
Tetrachloroethene	2.00	15538.0000	0.2732	5.00	40266.0000	0.2830	20.0	161643.000	0.2797
Trichloroethene	2.00	18423.0000	0.2427	5.00	46547.0000	0.2601	20.0	191770.000	0.2497

KEMRON FORMS - Modified 10/13/2006
Version 1.6 PDF File ID: 659351
Report generated 01/02/2007 16:01

INITIAL CALIBRATION DATA

00095957

Login Number: L0612485 **Instrument ID:** HPMS11

Analytical Method: 8260B **Initial Calibration Date:** 28-NOV-06 12:56

Column ID: F

Analyte	WG228336-08			WG228336-09			WG228336-10		
	CONC	RESP	RF	CONC	RESP	RF	CONC	RESP	RF
1,1-Dichloroethene	50.0	429283.000	0.2202	100	866668.000	0.2204	200	1680620.00	0.2152
1,2-Dichloropropane	50.0	503002.000	0.2580	100	1008619.00	0.2565	200	1943029.00	0.2488
Chloroform	50.0	859106.000	0.4406	100	1718909.00	0.4371	200	3330315.00	0.4264
Ethylbenzene	50.0	710273.000	0.4854	100	1346059.00	0.4548	200	2405553.00	0.4072
Toluene	50.0	1959480.00	1.339	100	3870650.00	1.308	200	7259432.00	1.229
Vinyl Chloride	50.0	351533.000	0.1803	100	703291.000	0.1788	200	1176184.00	0.1506
1,1,2,2-Tetrachloroethane	50.0	337762.000	0.4129	100	687824.000	0.4139	200	1354946.00	0.4057
1,1-Dichloroethane	50.0	982172.000	0.5037	100	1971997.00	0.5014	200	3833893.00	0.4909
Bromoform	50.0	255828.000	0.1748	100	524681.000	0.1773	200	1013566.00	0.1716
Chlorobenzene	50.0	1278788.00	0.8739	100	2451167.00	0.8282	200	4398582.00	0.7445
Chloromethane	50.0	498453.000	0.2556	100	955585.000	0.2430	200	2036386.00	0.2608
1,1,1-Trichloroethane	50.0	811686.000	0.4163	100	1589915.00	0.4043	200	2946476.00	0.3773
1,1,2-Trichloro-1,2,2-Trifluoroethane	50.0	442955.000	0.2272	100	922344.000	0.2345	200	1740776.00	0.2229
1,1,2-Trichloroethane	50.0	310150.000	0.2119	100	627469.000	0.2120	200	1196453.00	0.2025
1,2,4-Trichlorobenzene	50.0	759685.000	0.9286	100	1480520.00	0.8908	200	2665799.00	0.7981
1,2-Dibromo-3-Chloropropane	50.0	63149.0000	0.07720	100	129130.000	0.07770	200	262251.000	0.07850
1,2-Dibromoethane	50.0	321198.000	0.2195	100	650852.000	0.2199	200	1254606.00	0.2124
1,2-Dichlorobenzene	50.0	1014417.00	1.240	100	1993478.00	1.200	200	3778923.00	1.131
1,2-Dichloroethane	50.0	684594.000	0.3511	100	1357353.00	0.3451	200	2517339.00	0.3223
1,3-Dichlorobenzene	50.0	1137485.00	1.390	100	2224025.00	1.338	200	4207428.00	1.260
1,4-Dichlorobenzene	50.0	1156814.00	1.414	100	2245505.00	1.351	200	4218832.00	1.263
2-Butanone	50.0	114523.000	0.05870	100	242668.000	0.06170	200	491354.000	0.06290
2-Hexanone	50.0	198364.000	0.1356	100	405234.000	0.1369	200	792351.000	0.1341
4-Methyl-2-Pentanone	50.0	120348.000	0.06170	100	248192.000	0.06310	200	484508.000	0.06200
Acetone	50.0	68733.0000	0.03520	100	150514.000	0.03830	200	305163.000	0.03910
Benzene	50.0	1793172.00	0.9196	100	3547769.00	0.9021	200	6688348.00	0.8564
Bromodichloromethane	50.0	609527.000	0.3126	100	1220233.00	0.3103	200	2337045.00	0.2993
Bromomethane	50.0	356214.000	0.1827	100	741380.000	0.1885	200	1471626.00	0.1884
Carbon Disulfide	50.0	1303385.00	0.6684	100	2643400.00	0.6722	200	4984297.00	0.6382
Carbon Tetrachloride	50.0	726360.000	0.3725	100	1450355.00	0.3688	200	2761421.00	0.3536
Chloroethane	50.0	366916.000	0.1882	100	757223.000	0.1925	200	1473217.00	0.1886
Cyclohexane	50.0	1000893.00	0.5133	100	2058577.00	0.5234	200	3795020.00	0.4859
Dibromochloromethane	50.0	411880.000	0.2815	100	831743.000	0.2810	200	1593175.00	0.2697
Dichlorodifluoromethane	50.0	615085.000	0.3154	100	1284532.00	0.3266	200	2370191.00	0.3035
Isopropylbenzene	50.0	2280519.00	1.558	100	4479839.00	1.514	200	8353809.00	1.414
Methyl Tert Butyl Ether	50.0	975076.000	0.5001	100	2013560.00	0.5120	200	3811132.00	0.4880
Methyl acetate	50.0	254043.000	0.1303	100	526592.000	0.1339	200	1016210.00	0.1301
Methylcyclohexane	50.0	716926.000	0.3677	100	1502841.00	0.3821	200	2835811.00	0.3631
Methylene Chloride	50.0	422717.000	0.2168	100	853498.000	0.2170	200	1617339.00	0.2071
Styrene	50.0	1509698.00	1.032	100	2976840.00	1.006	200	5548982.00	0.9393
Tetrachloroethene	50.0	407737.000	0.2786	100	802433.000	0.2711	200	1480234.00	0.2506
Trichloroethene	50.0	489099.000	0.2508	100	963296.000	0.2449	200	1833017.00	0.2347

KEMRON Environmental Services

INITIAL CALIBRATION DATA

00095958

Login Number: L0612485 **Instrument ID:** HPMS11

Analytical Method: 8260B **Initial Calibration Date:** 28-NOV-06 12:56

Column ID: F

Analyte	WG228336-02			WG228336-03			WG228336-04		
	CONC	RESP	RF	CONC	RESP	RF	CONC	RESP	RF
Trichlorofluoromethane	NA	NA	NA	0.400	6382.00000	0.4167	1.00	15472.0000	0.4031
cis-1,2-Dichloroethene	NA	NA	NA	0.400	3741.00000	0.2442	1.00	8140.00000	0.2121
cis-1,3-Dichloropropene	NA	NA	NA	0.400	5035.00000	0.3287	1.00	11340.0000	0.2954
m-,p-Xylene	NA	NA	NA	0.800	13501.0000	0.5857	2.00	30598.0000	0.5363
o-Xylene	NA	NA	NA	0.400	6224.00000	0.5400	1.00	13965.0000	0.4896
trans-1,2-Dichloroethene	NA	NA	NA	0.400	3344.00000	0.2183	1.00	7536.00000	0.1963
trans-1,3-Dichloropropene	NA	NA	NA	0.400	4428.00000	0.3842	1.00	10299.0000	0.3610

INITIAL CALIBRATION DATA

00095959

Login Number: L0612485
Analytical Method: 8260B
Instrument ID: HPMS11
Initial Calibration Date: 28-NOV-06 12:56
Column ID: F

Analyte	WG228336-05			WG228336-06			WG228336-07		
	CONC	RESP	RF	CONC	RESP	RF	CONC	RESP	RF
Trichlorofluoromethane	2.00	34565.0000	0.4554	5.00	83303.0000	0.4656	20.0	352824.000	0.4594
cis-1,2-Dichloroethene	2.00	17938.0000	0.2363	5.00	42924.0000	0.2399	20.0	194965.000	0.2539
cis-1,3-Dichloropropene	2.00	23664.0000	0.3118	5.00	63012.0000	0.3522	20.0	280397.000	0.3651
m-,p-Xylene	4.00	67744.0000	0.5955	10.0	178497.000	0.6273	40.0	717656.000	0.6210
o-Xylene	2.00	30641.0000	0.5387	5.00	85979.0000	0.6043	20.0	343917.000	0.5952
trans-1,2-Dichloroethene	2.00	17024.0000	0.2243	5.00	40289.0000	0.2252	20.0	181455.000	0.2363
trans-1,3-Dichloropropene	2.00	21055.0000	0.3702	5.00	56597.0000	0.3978	20.0	250545.000	0.4336

KEMRON Environmental Services

INITIAL CALIBRATION DATA

00095960

Login Number: L0612485 **Instrument ID:** HPMS11

Analytical Method: 8260B **Initial Calibration Date:** 28-NOV-06 12:56

Column ID: F

Analyte	WG228336-08			WG228336-09			WG228336-10		
	CONC	RESP	RF	CONC	RESP	RF	CONC	RESP	RF
Trichlorofluoromethane	50.0	880759.000	0.4517	100	1823583.00	0.4637	200	3496099.00	0.4477
cis-1,2-Dichloroethene	50.0	501174.000	0.2570	100	1002795.00	0.2550	200	1931342.00	0.2473
cis-1,3-Dichloropropene	50.0	720602.000	0.3696	100	1453962.00	0.3697	200	2766914.00	0.3543
m-,p-Xylene	100	1780524.00	0.6084	200	3391514.00	0.5729	400	5918409.00	0.5009
o-Xylene	50.0	875034.000	0.5980	100	1705086.00	0.5761	200	3170069.00	0.5366
trans-1,2-Dichloroethene	50.0	470145.000	0.2411	100	947259.000	0.2409	200	1820442.00	0.2331
trans-1,3-Dichloropropene	50.0	651213.000	0.4450	100	1300794.00	0.4395	200	2469185.00	0.4180

KEMRON FORMS - Modified 10/13/2006
Version 1.6 PDF File ID: 659351
Report generated 01/02/2007 16:01

INITIAL CALIBRATION DATA

00095961

Login Number: L0612485 **Instrument ID:** HPMS6

Analytical Method: 8260B **Initial Calibration Date:** 20-NOV-06 14:29

Column ID: F

Analyte	WG227929-02			WG227929-03			WG227929-04		
	CONC	RESP	RF	CONC	RESP	RF	CONC	RESP	RF
1,1-Dichloroethene	NA	NA	NA	0.400	4048.00000	0.3018	1.00	13077.0000	0.3985
1,2-Dichloropropane	NA	NA	NA	0.400	2863.00000	0.2135	1.00	7343.00000	0.2238
Chloroform	0.300	5521.00000	0.5255	0.400	7135.00000	0.5320	1.00	16443.0000	0.5011
Ethylbenzene	NA	NA	NA	0.400	4941.00000	0.4913	1.00	13633.0000	0.5451
Toluene	NA	NA	NA	0.400	14789.0000	1.471	1.00	36300.0000	1.451
Vinyl Chloride	NA	NA	NA	0.400	3541.00000	0.2640	1.00	8103.00000	0.2469
1,1,2,2-Tetrachloroethane	NA	NA	NA	0.400	2260.00000	0.3767	1.00	5327.00000	0.3718
1,1-Dichloroethane	NA	NA	NA	0.400	5514.00000	0.4112	1.00	14026.0000	0.4274
Bromoform	NA	NA	NA	NA	NA	NA	1.00	4007.00000	0.1602
Chlorobenzene	NA	NA	NA	0.400	9890.00000	0.9834	1.00	24062.0000	0.9620
Chloromethane	NA	NA	NA	0.400	4257.00000	0.3174	1.00	9546.00000	0.2909
1,1,1-Trichloroethane	NA	NA	NA	0.400	5880.00000	0.4384	1.00	15242.0000	0.4645
1,1,2-Trichloro-1,2,2-Trifluoroethane	NA	NA	NA	NA	NA	NA	1.00	9359.00000	0.2852
1,1,2-Trichloroethane	NA	NA	NA	0.400	1996.00000	0.1985	1.00	5404.00000	0.2161
1,2,4-Trichlorobenzene	NA	NA	NA	0.400	5918.00000	0.9864	1.00	14894.0000	1.040
1,2-Dibromo-3-Chloropropane	NA	NA	NA	NA	NA	NA	1.00	1031.00000	0.07200
1,2-Dibromoethane	NA	NA	NA	0.400	2151.00000	0.2139	1.00	5333.00000	0.2132
1,2-Dichlorobenzene	0.300	6492.00000	1.435	0.400	7967.00000	1.328	1.00	18940.0000	1.322
1,2-Dichloroethane	NA	NA	NA	0.400	4832.00000	0.3603	1.00	11569.0000	0.3526
1,3-Dichlorobenzene	NA	NA	NA	0.400	9162.00000	1.527	1.00	20630.0000	1.440
1,4-Dichlorobenzene	0.300	7978.00000	1.763	0.400	8977.00000	1.496	1.00	21687.0000	1.514
2-Butanone	NA	NA	NA	NA	NA	NA	NA	NA	NA
2-Hexanone	NA	NA	NA	NA	NA	NA	NA	NA	NA
4-Methyl-2-Pentanone	NA	NA	NA	NA	NA	NA	NA	NA	NA
Acetone	NA	NA	NA	NA	NA	NA	NA	NA	NA
Benzene	NA	NA	NA	0.400	13490.0000	1.006	1.00	32179.0000	0.9806
Bromodichloromethane	NA	NA	NA	0.400	4315.00000	0.3217	1.00	11158.0000	0.3400
Bromomethane	NA	NA	NA	NA	NA	NA	1.00	3451.00000	0.1052
Carbon Disulfide	NA	NA	NA	0.400	9036.00000	0.6738	1.00	17039.0000	0.5192
Carbon Tetrachloride	NA	NA	NA	0.400	4860.00000	0.3624	1.00	13090.0000	0.3989
Chloroethane	NA	NA	NA	0.400	1824.00000	0.1360	1.00	5829.00000	0.1776
Cyclohexane	NA	NA	NA	NA	NA	NA	1.00	7849.00000	0.2392
Dibromochloromethane	NA	NA	NA	0.400	2675.00000	0.2660	1.00	6599.00000	0.2638
Dichlorodifluoromethane	NA	NA	NA	0.400	4751.00000	0.3543	1.00	13414.0000	0.4088
Isopropylbenzene	NA	NA	NA	0.400	15284.0000	1.520	1.00	40298.0000	1.611
Methyl Tert Butyl Ether	NA	NA	NA	NA	NA	NA	1.00	16728.0000	0.5098
Methyl acetate	NA	NA	NA	NA	NA	NA	1.00	3243.00000	0.09880
Methylcyclohexane	NA	NA	NA	NA	NA	NA	1.00	9324.00000	0.2841
Methylene Chloride	NA	NA	NA	0.400	4568.00000	0.3406	1.00	8260.00000	0.2517
Styrene	NA	NA	NA	0.400	9900.00000	0.9844	1.00	24287.0000	0.9710
Tetrachloroethene	NA	NA	NA	0.400	4325.00000	0.4301	1.00	10079.0000	0.4030
Trichloroethene	NA	NA	NA	0.400	3679.00000	0.2743	1.00	9071.00000	0.2764

KEMRON FORMS - Modified 10/13/2006
Version 1.6 PDF File ID: 659351
Report generated 01/02/2007 16:01

KEMRON Environmental Services

INITIAL CALIBRATION DATA

00095962

Login Number:L0612485 Instrument ID:HPMS6

Analytical Method:8260B Initial Calibration Date:20-NOV-06 14:29

Column ID:F

Analyte	WG227929-05			WG227929-06			WG227929-07		
	CONC	RESP	RF	CONC	RESP	RF	CONC	RESP	RF
1,1-Dichloroethene	2.00	25476.0000	0.3943	5.00	53852.0000	0.3348	20.0	253000.000	0.3883
1,2-Dichloropropane	2.00	14849.0000	0.2298	5.00	32907.0000	0.2046	20.0	143370.000	0.2200
Chloroform	2.00	32490.0000	0.5028	5.00	74860.0000	0.4654	20.0	324804.000	0.4984
Ethylbenzene	2.00	25640.0000	0.5199	5.00	58335.0000	0.4802	20.0	264222.000	0.5378
Toluene	2.00	71235.0000	1.444	5.00	156485.000	1.288	20.0	695076.000	1.415
Vinyl Chloride	2.00	13901.0000	0.2151	5.00	30454.0000	0.1893	20.0	122970.000	0.1887
1,1,2,2-Tetrachloroethane	2.00	10738.0000	0.3722	5.00	28994.0000	0.4058	20.0	117752.000	0.4003
1,1-Dichloroethane	2.00	28615.0000	0.4429	5.00	66697.0000	0.4146	20.0	295110.000	0.4529
Bromoform	2.00	7796.00000	0.1581	5.00	22064.0000	0.1816	20.0	96523.0000	0.1964
Chlorobenzene	2.00	46400.0000	0.9408	5.00	111244.000	0.9157	20.0	489386.000	0.9960
Chloromethane	2.00	16667.0000	0.2580	5.00	36573.0000	0.2274	20.0	146511.000	0.2248
1,1,1-Trichloroethane	2.00	31108.0000	0.4815	5.00	65967.0000	0.4101	20.0	320550.000	0.4919
1,1,2-Trichloro-1,2,2-Trifluoroethane	2.00	17575.0000	0.2720	5.00	42173.0000	0.2622	20.0	172365.000	0.2645
1,1,2-Trichloroethane	2.00	10818.0000	0.2193	5.00	25951.0000	0.2136	20.0	109844.000	0.2236
1,2,4-Trichlorobenzene	2.00	28072.0000	0.9731	5.00	71664.0000	1.003	20.0	305077.000	1.037
1,2-Dibromo-3-Chloropropane	2.00	1829.00000	0.06340	5.00	5243.00000	0.07340	20.0	24866.0000	0.08450
1,2-Dibromoethane	2.00	11671.0000	0.2366	5.00	28567.0000	0.2351	20.0	118753.000	0.2417
1,2-Dichlorobenzene	2.00	37089.0000	1.286	5.00	91157.0000	1.276	20.0	393067.000	1.336
1,2-Dichloroethane	2.00	22840.0000	0.3535	5.00	53373.0000	0.3318	20.0	227527.000	0.3492
1,3-Dichlorobenzene	2.00	42435.0000	1.471	5.00	100683.000	1.409	20.0	438627.000	1.491
1,4-Dichlorobenzene	2.00	43194.0000	1.497	5.00	103244.000	1.445	20.0	449949.000	1.530
2-Butanone	NA	NA	NA	5.00	7587.00000	0.04720	20.0	31572.0000	0.04850
2-Hexanone	NA	NA	NA	5.00	12279.0000	0.1011	20.0	48110.0000	0.09790
4-Methyl-2-Pentanone	NA	NA	NA	5.00	6623.00000	0.04120	20.0	27641.0000	0.04240
Acetone	NA	NA	NA	5.00	6521.00000	0.04050	20.0	24315.0000	0.03730
Benzene	2.00	61674.0000	0.9545	5.00	137930.000	0.8574	20.0	622484.000	0.9553
Bromodichloromethane	2.00	22473.0000	0.3478	5.00	54271.0000	0.3374	20.0	230527.000	0.3538
Bromomethane	2.00	7453.00000	0.1153	5.00	19976.0000	0.1242	20.0	102013.000	0.1565
Carbon Disulfide	2.00	47430.0000	0.7341	5.00	104417.000	0.6491	20.0	449054.000	0.6891
Carbon Tetrachloride	2.00	26826.0000	0.4152	5.00	57961.0000	0.3603	20.0	285144.000	0.4376
Chloroethane	2.00	11586.0000	0.1793	5.00	27684.0000	0.1721	20.0	112133.000	0.1721
Cyclohexane	2.00	25162.0000	0.3894	5.00	56354.0000	0.3503	20.0	241229.000	0.3702
Dibromochloromethane	2.00	14323.0000	0.2904	5.00	35499.0000	0.2922	20.0	155526.000	0.3165
Dichlorodifluoromethane	2.00	24851.0000	0.3846	5.00	59717.0000	0.3712	20.0	244306.000	0.3749
Isopropylbenzene	2.00	81532.0000	1.653	5.00	183968.000	1.514	20.0	841033.000	1.712
Methyl Tert Butyl Ether	2.00	34889.0000	0.5400	5.00	87056.0000	0.5412	20.0	348846.000	0.5353
Methyl acetate	2.00	6273.00000	0.09710	5.00	15003.0000	0.09330	20.0	56158.0000	0.08620
Methylcyclohexane	2.00	28769.0000	0.4453	5.00	63201.0000	0.3929	20.0	264844.000	0.4064
Methylene Chloride	2.00	16907.0000	0.2617	5.00	39115.0000	0.2432	20.0	164467.000	0.2524
Styrene	2.00	49521.0000	1.004	5.00	118334.000	0.9741	20.0	535314.000	1.090
Tetrachloroethene	2.00	20074.0000	0.4070	5.00	43965.0000	0.3619	20.0	202150.000	0.4114
Trichloroethene	2.00	17598.0000	0.2724	5.00	40251.0000	0.2502	20.0	186867.000	0.2868

KEMRON FORMS - Modified 10/13/2006
Version 1.6 PDF File ID: 659351
Report generated 01/02/2007 16:01

INITIAL CALIBRATION DATA

00095963

Login Number: L0612485 **Instrument ID:** HPMS6

Analytical Method: 8260B **Initial Calibration Date:** 20-NOV-06 14:29

Column ID: F

Analyte	WG227929-08			WG227929-09			WG227929-10		
	CONC	RESP	RF	CONC	RESP	RF	CONC	RESP	RF
1,1-Dichloroethene	50.0	623539.000	0.3869	100	1221242.00	0.3705	150	1901484.00	0.3733
1,2-Dichloropropane	50.0	363317.000	0.2254	100	728952.000	0.2211	150	1128877.00	0.2216
Chloroform	50.0	800520.000	0.4967	100	1562483.00	0.4740	150	2381690.00	0.4676
Ethylbenzene	50.0	664445.000	0.5306	100	1312282.00	0.5075	150	2015825.00	0.4961
Toluene	50.0	1721109.00	1.375	100	3416101.00	1.321	150	5174612.00	1.274
Vinyl Chloride	50.0	298592.000	0.1853	100	512891.000	0.1556	150	777200.000	0.1526
1,1,2,2-Tetrachloroethane	50.0	302639.000	0.3914	100	648615.000	0.4040	150	1004823.00	0.3950
1,1-Dichloroethane	50.0	727872.000	0.4516	100	1408052.00	0.4271	150	2171005.00	0.4262
Bromoform	50.0	263066.000	0.2101	100	566718.000	0.2192	150	899471.000	0.2214
Chlorobenzene	50.0	1215495.00	0.9707	100	2429466.00	0.9396	150	3737322.00	0.9198
Chloromethane	50.0	364985.000	0.2265	100	728857.000	0.2211	150	1192199.00	0.2341
1,1,1-Trichloroethane	50.0	807193.000	0.5008	100	1533494.00	0.4652	150	2318993.00	0.4553
1,1,2-Trichloro-1,2,2-Trifluoroethane	50.0	417485.000	0.2590	100	812102.000	0.2463	150	1245358.00	0.2445
1,1,2-Trichloroethane	50.0	276512.000	0.2208	100	569480.000	0.2202	150	889886.000	0.2190
1,2,4-Trichlorobenzene	50.0	783852.000	1.014	100	1589038.00	0.9898	150	2411378.00	0.9480
1,2-Dibromo-3-Chloropropane	50.0	67062.0000	0.08670	100	138865.000	0.08650	150	206174.000	0.08110
1,2-Dibromoethane	50.0	300858.000	0.2403	100	619767.000	0.2397	150	967269.000	0.2381
1,2-Dichlorobenzene	50.0	1016740.00	1.315	100	2076131.00	1.293	150	3212209.00	1.263
1,2-Dichloroethane	50.0	547981.000	0.3400	100	1081577.00	0.3281	150	1623053.00	0.3186
1,3-Dichlorobenzene	50.0	1142092.00	1.477	100	2305841.00	1.436	150	3580327.00	1.408
1,4-Dichlorobenzene	50.0	1160747.00	1.501	100	2343203.00	1.460	150	3624768.00	1.425
2-Butanone	50.0	77266.0000	0.04790	100	159307.000	0.04830	150	247953.000	0.04870
2-Hexanone	50.0	122933.000	0.09820	100	261377.000	0.1011	150	409274.000	0.1007
4-Methyl-2-Pentanone	50.0	72557.0000	0.04500	100	155919.000	0.04730	150	243638.000	0.04780
Acetone	50.0	55151.0000	0.03420	100	111125.000	0.03370	150	170185.000	0.03340
Benzene	50.0	1528419.00	0.9483	100	3009771.00	0.9130	150	4631412.00	0.9093
Bromodichloromethane	50.0	580605.000	0.3602	100	1161791.00	0.3524	150	1775690.00	0.3486
Bromomethane	50.0	274956.000	0.1706	100	595971.000	0.1808	150	908161.000	0.1783
Carbon Disulfide	50.0	1122974.00	0.6968	100	2194081.00	0.6656	150	3369176.00	0.6615
Carbon Tetrachloride	50.0	725280.000	0.4500	100	1380995.00	0.4189	150	2060909.00	0.4046
Chloroethane	50.0	282301.000	0.1752	100	548634.000	0.1664	150	839569.000	0.1648
Cyclohexane	50.0	605149.000	0.3755	100	1178689.00	0.3576	150	1761587.00	0.3458
Dibromochloromethane	50.0	399871.000	0.3193	100	831461.000	0.3216	150	1305320.00	0.3213
Dichlorodifluoromethane	50.0	596453.000	0.3701	100	1137480.00	0.3451	150	1712102.00	0.3361
Isopropylbenzene	50.0	2139045.00	1.708	100	4181911.00	1.617	150	6417581.00	1.579
Methyl Tert Butyl Ether	50.0	849168.000	0.5269	100	1724128.00	0.5230	150	2641449.00	0.5186
Methyl acetate	50.0	135608.000	0.08410	100	274020.000	0.08310	150	436818.000	0.08580
Methylcyclohexane	50.0	663205.000	0.4115	100	1286496.00	0.3903	150	1963247.00	0.3854
Methylene Chloride	50.0	397403.000	0.2466	100	791153.000	0.2400	150	1225113.00	0.2405
Styrene	50.0	1366904.00	1.092	100	2745387.00	1.062	150	4246907.00	1.045
Tetrachloroethene	50.0	503873.000	0.4024	100	988300.000	0.3822	150	1540428.00	0.3791
Trichloroethene	50.0	471853.000	0.2928	100	922142.000	0.2797	150	1438686.00	0.2825

INITIAL CALIBRATION DATA

00095964

Login Number:L0612485
Analytical Method:8260B

Instrument ID:HPMS6
Initial Calibration Date:20-NOV-06 14:29
Column ID:F

Analyte	WG227929-11		
	CONC	RESP	RF
1,1-Dichloroethene	200	2582803.00	0.3700
1,2-Dichloropropane	200	1550407.00	0.2221
Chloroform	200	3225209.00	0.4621
Ethylbenzene	200	2742575.00	0.4842
Toluene	200	6985140.00	1.233
Vinyl Chloride	NA	NA	NA
1,1,2,2-Tetrachloroethane	200	1298044.00	0.3759
1,1-Dichloroethane	200	2993928.00	0.4289
Bromoform	200	1194753.00	0.2109
Chlorobenzene	200	5096339.00	0.8998
Chloromethane	200	1629838.00	0.2335
1,1,1-Trichloroethane	200	3104302.00	0.4447
1,1,2-Trichloro-1,2,2-Trifluoroethane	200	1643076.00	0.2354
1,1,2-Trichloroethane	200	1212565.00	0.2141
1,2,4-Trichlorobenzene	200	3140640.00	0.9095
1,2-Dibromo-3-Chloropropane	200	261040.000	0.07560
1,2-Dibromoethane	200	1293982.00	0.2285
1,2-Dichlorobenzene	200	4255874.00	1.232
1,2-Dichloroethane	200	2110473.00	0.3024
1,3-Dichlorobenzene	200	4831417.00	1.399
1,4-Dichlorobenzene	200	4841480.00	1.402
2-Butanone	200	325758.000	0.04670
2-Hexanone	200	507714.000	0.08960
4-Methyl-2-Pentanone	200	306528.000	0.04390
Acetone	200	218196.000	0.03130
Benzene	200	6266343.00	0.8978
Bromodichloromethane	200	2399738.00	0.3438
Bromomethane	200	1267130.00	0.1815
Carbon Disulfide	200	4580747.00	0.6563
Carbon Tetrachloride	200	2741105.00	0.3927
Chloroethane	200	1128989.00	0.1617
Cyclohexane	200	2398900.00	0.3437
Dibromochloromethane	200	1767524.00	0.3121
Dichlorodifluoromethane	200	2221055.00	0.3182
Isopropylbenzene	200	8675145.00	1.532
Methyl Tert Butyl Ether	200	3413049.00	0.4890
Methyl acetate	200	572885.000	0.08210
Methylcyclohexane	200	2672307.00	0.3829
Methylene Chloride	200	1673686.00	0.2398
Styrene	200	5745949.00	1.015
Tetrachloroethene	200	2117860.00	0.3739
Trichloroethene	200	1994814.00	0.2858

KEMRON Environmental Services

INITIAL CALIBRATION DATA

00095965

Login Number: L0612485
Analytical Method: 8260B

Instrument ID: HPMS6
Initial Calibration Date: 20-NOV-06 14:29
Column ID: F

Analyte	WG227929-02			WG227929-03			WG227929-04		
	CONC	RESP	RF	CONC	RESP	RF	CONC	RESP	RF
Trichlorofluoromethane	NA	NA	NA	0.400	7292.00000	0.5437	1.00	17924.0000	0.5462
cis-1,2-Dichloroethene	NA	NA	NA	0.400	3659.00000	0.2728	1.00	8390.00000	0.2557
cis-1,3-Dichloropropene	NA	NA	NA	0.400	4526.00000	0.3375	1.00	11506.0000	0.3506
m-,p-Xylene	NA	NA	NA	0.800	13433.0000	0.6679	2.00	32377.0000	0.6472
o-Xylene	NA	NA	NA	0.400	5859.00000	0.5826	1.00	15518.0000	0.6204
trans-1,2-Dichloroethene	NA	NA	NA	0.400	3024.00000	0.2255	1.00	9194.00000	0.2802
trans-1,3-Dichloropropene	NA	NA	NA	0.400	3804.00000	0.3783	1.00	9621.00000	0.3847

KEMRON Environmental Services

INITIAL CALIBRATION DATA

00095966

Login Number: L0612485 **Instrument ID:** HPMS6

Analytical Method: 8260B **Initial Calibration Date:** 20-NOV-06 14:29

Column ID: F

Analyte	WG227929-05			WG227929-06			WG227929-07		
	CONC	RESP	RF	CONC	RESP	RF	CONC	RESP	RF
Trichlorofluoromethane	2.00	35356.0000	0.5472	5.00	84329.0000	0.5242	20.0	349261.000	0.5360
cis-1,2-Dichloroethene	2.00	17959.0000	0.2780	5.00	41135.0000	0.2557	20.0	176872.000	0.2714
cis-1,3-Dichloropropene	2.00	23638.0000	0.3658	5.00	59574.0000	0.3703	20.0	261560.000	0.4014
m-,p-Xylene	4.00	63751.0000	0.6463	10.0	144655.000	0.5954	40.0	651621.000	0.6631
o-Xylene	2.00	30370.0000	0.6158	5.00	70276.0000	0.5785	20.0	312813.000	0.6366
trans-1,2-Dichloroethene	2.00	17603.0000	0.2724	5.00	37369.0000	0.2323	20.0	169239.000	0.2597
trans-1,3-Dichloropropene	2.00	21430.0000	0.4345	5.00	53323.0000	0.4389	20.0	235585.000	0.4795

KEMRON Environmental Services

INITIAL CALIBRATION DATA

00095967

Login Number: L0612485 **Instrument ID:** HPMS6

Analytical Method: 8260B **Initial Calibration Date:** 20-NOV-06 14:29

Column ID: F

Analyte	WG227929-08			WG227929-09			WG227929-10		
	CONC	RESP	RF	CONC	RESP	RF	CONC	RESP	RF
Trichlorofluoromethane	50.0	870781.000	0.5403	100	1742322.00	0.5285	150	2701650.00	0.5304
cis-1,2-Dichloroethene	50.0	444956.000	0.2761	100	878233.000	0.2664	150	1363338.00	0.2677
cis-1,3-Dichloropropene	50.0	655328.000	0.4066	100	1326138.00	0.4023	150	2046998.00	0.4019
m-,p-Xylene	100	1656592.00	0.6615	200	3235389.00	0.6256	300	4940454.00	0.6080
o-Xylene	50.0	798940.000	0.6380	100	1592423.00	0.6158	150	2504175.00	0.6163
trans-1,2-Dichloroethene	50.0	416473.000	0.2584	100	816129.000	0.2476	150	1246406.00	0.2447
trans-1,3-Dichloropropene	50.0	597204.000	0.4769	100	1200347.00	0.4642	150	1869245.00	0.4600

KEMRON Environmental Services

INITIAL CALIBRATION DATA

00095968

Login Number: L0612485
Analytical Method: 8260B

Instrument ID: HPMS6
Initial Calibration Date: 20-NOV-06 14:29
Column ID: F

Analyte	WG227929-11		
	CONC	RESP	RF
Trichlorofluoromethane	200	3591552.00	0.5146
cis-1,2-Dichloroethene	200	1883057.00	0.2698
cis-1,3-Dichloropropene	200	2790457.00	0.3998
m-,p-Xylene	400	6617291.00	0.5841
o-Xylene	200	3426239.00	0.6049
trans-1,2-Dichloroethene	200	1735008.00	0.2486
trans-1,3-Dichloropropene	200	2478857.00	0.4376

KEMRON Environmental Services

ALTERNATE SOURCE CALIBRATION REPORT

00095969

Login Number: L0612485 Run Date: 11/28/2006 Sample ID: WG228336-11

Instrument ID: HPMS11 Run Time: 14:28 Method: 8260B

File ID: 11M38446 Analyst: CMS

ICal Workgroup: WG228336 Cal ID: HPMS11 - 28-NOV-06

Analyte		Expected	Found	Units	RF	%D	UCL	Q
1,1-Dichloroethene	CCC	20.0	20.9	ug/L	0.211	4.40	30	
1,2-Dichloropropane	CCC	20.0	21.1	ug/L	0.266	5.40	30	
Chloroform	CCC	20.0	20.0	ug/L	0.431	0.200	30	
Ethylbenzene	CCC	20.0	21.5	ug/L	0.505	7.60	30	
Toluene	CCC	20.0	20.7	ug/L	1.33	3.60	30	
Vinyl Chloride	CCC	20.0	18.1	ug/L	0.175	9.60	30	
1,1,2,2-Tetrachloroethane	SPCC	20.0	20.9	ug/L	0.408	4.70	30	
1,1-Dichloroethane	SPCC	20.0	20.6	ug/L	0.501	3.20	30	
Bromoform	SPCC	20.0	17.9	ug/L	0.154	10.5	30	
Chlorobenzene	SPCC	20.0	20.8	ug/L	0.906	4.00	30	
Chloromethane	SPCC	20.0	17.8	ug/L	0.240	10.8	30	
1,1,1-Trichloroethane		20.0	21.1	ug/L	0.408	5.40	30	
1,1,2-Trichloro-1,2,2-Trifluoroethane		20.0	20.4	ug/L	0.226	2.00	30	
1,1,2-Trichloroethane		20.0	21.1	ug/L	0.216	5.70	30	
1,2,4-Trichlorobenzene		20.0	21.0	ug/L	0.943	5.00	30	
1,2-Dibromo-3-Chloropropane		20.0	20.2	ug/L	0.0753	0.900	30	
1,2-Dibromoethane		20.0	21.2	ug/L	0.216	6.00	30	
1,2-Dichlorobenzene		20.0	20.7	ug/L	1.27	3.60	30	
1,2-Dichloroethane		20.0	20.0	ug/L	0.341	0.200	30	
cis-1,2-Dichloroethene		20.0	20.8	ug/L	0.253	3.80	30	
trans-1,2-Dichloroethene		20.0	20.6	ug/L	0.233	2.90	30	
1,3-Dichlorobenzene		20.0	20.9	ug/L	1.43	4.60	30	
1,4-Dichlorobenzene		20.0	20.2	ug/L	1.45	0.800	30	
2-Butanone		20.0	19.6	ug/L	0.0560	2.20	30	
2-Hexanone		20.0	18.4	ug/L	0.119	7.80	30	
4-Methyl-2-Pentanone		20.0	19.0	ug/L	0.0558	5.20	30	
Acetone		20.0	21.8	ug/L	0.0394	8.90	30	
Benzene		20.0	20.8	ug/L	0.934	4.00	30	
Bromodichloromethane		20.0	21.4	ug/L	0.315	7.10	30	
Bromomethane		20.0	18.9	ug/L	0.172	5.50	30	
Carbon Disulfide		20.0	20.8	ug/L	0.661	3.90	30	
Carbon Tetrachloride		20.0	20.8	ug/L	0.351	4.10	30	
Chloroethane		20.0	18.6	ug/L	0.168	6.80	30	
cis-1,3-Dichloropropene		20.0	21.5	ug/L	0.370	7.70	30	
Cyclohexane		20.0	21.1	ug/L	0.521	5.50	30	
Dibromochloromethane		20.0	21.5	ug/L	0.270	7.40	30	
Dichlorodifluoromethane		20.0	17.4	ug/L	0.279	13.0	30	
Isopropylbenzene		20.0	19.8	ug/L	1.42	1.20	30	
Methyl acetate		20.0	17.9	ug/L	0.111	10.4	30	
Methyl Tert Butyl Ether		20.0	21.2	ug/L	0.475	5.90	30	
Methylcyclohexane		20.0	21.4	ug/L	0.380	7.10	30	
Methylene Chloride		20.0	19.6	ug/L	0.212	1.80	30	

KEMRON FORMS - Modified 11/21/2006
Version 1.5 PDF File ID: 659353
Report generated 01/02/2007 16:01

KEMRON Environmental Services

ALTERNATE SOURCE CALIBRATION REPORT

00095970

Login Number: L0612485 Run Date: 11/28/2006 Sample ID: WG228336-11
Instrument ID: HPMS11 Run Time: 14:28 Method: 8260B
File ID: 11M38446 Analyst: CMS
ICal Workgroup: WG228336 Cal ID: HPMS11 - 28-NOV-06

Analyte		Expected	Found	Units	RF	%D	UCL	Q
Styrene		20.0	22.6	ug/L	1.04	12.8	30	
Tetrachloroethene		20.0	21.3	ug/L	0.281	6.70	30	
trans-1,3-Dichloropropene		20.0	19.4	ug/L	0.395	2.80	30	
Trichloroethene		20.0	21.5	ug/L	0.260	7.60	30	
Trichlorofluoromethane		20.0	18.0	ug/L	0.401	10.0	30	
Xylenes		60.0	64.9	ug/L	0.617	8.10	30	
o-Xylene		20.0	21.7	ug/L	0.606	8.30	30	
1,2-Dichloroethene		40.0	41.3	ug/L	0.243	3.40	30	
m-,p-Xylene		40.0	43.2	ug/L	0.627	8.00	30	

* Exceeds %D Limit

CCC Calibration Check Compounds
SPCC System Performance Check Compounds

KEMRON FORMS - Modified 11/21/2006
Version 1.5 PDF File ID: 659353
Report generated 01/02/2007 16:01

KEMRON Environmental Services

ALTERNATE SOURCE CALIBRATION REPORT

00095971

Login Number: L0612485 Run Date: 11/20/2006 Sample ID: WG227929-12

Instrument ID: HPMS6 Run Time: 17:01 Method: 8260B

File ID: 6M62051 Analyst: CMS

ICal Workgroup: WG227929 Cal ID: HPMS6 - 20-NOV-06

Analyte		Expected	Found	Units	RF	%D	UCL	Q
1,1-Dichloroethene	CCC	20.0	21.0	ug/L	0.387	5.00	30	
1,2-Dichloropropane	CCC	20.0	20.7	ug/L	0.228	3.30	30	
Chloroform	CCC	20.0	20.2	ug/L	0.497	1.00	30	
Ethylbenzene	CCC	20.0	21.8	ug/L	0.555	8.80	30	
Toluene	CCC	20.0	20.8	ug/L	1.42	4.20	30	
Vinyl Chloride	CCC	20.0	21.3	ug/L	0.195	6.60	30	
1,1,2,2-Tetrachloroethane	SPCC	20.0	20.3	ug/L	0.394	1.50	30	
1,1-Dichloroethane	SPCC	20.0	21.1	ug/L	0.456	5.70	30	
Bromoform	SPCC	20.0	19.8	ug/L	0.193	1.00	30	
Chlorobenzene	SPCC	20.0	20.8	ug/L	0.986	4.00	30	
Chloromethane	SPCC	20.0	20.5	ug/L	0.254	2.30	30	
1,1,1-Trichloroethane		20.0	20.9	ug/L	0.482	4.50	30	
1,1,2-Trichloro-1,2,2-Trifluoroethane		20.0	20.2	ug/L	0.261	0.800	30	
1,1,2-Trichloroethane		20.0	21.2	ug/L	0.229	5.90	30	
1,2,4-Trichlorobenzene		20.0	21.0	ug/L	1.04	5.10	30	
1,2-Dibromo-3-Chloropropane		20.0	21.4	ug/L	0.0834	7.00	30	
1,2-Dibromoethane		20.0	20.8	ug/L	0.241	3.90	30	
1,2-Dichlorobenzene		20.0	20.3	ug/L	1.33	1.70	30	
1,2-Dichloroethane		20.0	20.1	ug/L	0.339	0.400	30	
cis-1,2-Dichloroethene		20.0	20.9	ug/L	0.280	4.30	30	
trans-1,2-Dichloroethene		20.0	20.6	ug/L	0.260	3.20	30	
1,3-Dichlorobenzene		20.0	20.6	ug/L	1.49	3.00	30	
1,4-Dichlorobenzene		20.0	20.2	ug/L	1.52	0.800	30	
2-Butanone		20.0	23.8	ug/L	0.0569	18.8	30	
2-Hexanone		20.0	18.9	ug/L	0.0926	5.60	30	
4-Methyl-2-Pentanone		20.0	19.4	ug/L	0.0433	3.00	30	
Acetone		20.0	23.5	ug/L	0.0412	17.4	30	
Benzene		20.0	20.6	ug/L	0.965	3.10	30	
Bromodichloromethane		20.0	21.2	ug/L	0.365	5.80	30	
Bromomethane		20.0	21.0	ug/L	0.176	5.10	30	
Carbon Disulfide		20.0	19.8	ug/L	0.655	0.900	30	
Carbon Tetrachloride		20.0	21.2	ug/L	0.429	6.10	30	
Chloroethane		20.0	20.9	ug/L	0.175	4.50	30	
cis-1,3-Dichloropropene		20.0	21.1	ug/L	0.402	5.40	30	
Cyclohexane		20.0	19.7	ug/L	0.341	1.50	30	
Dibromochloromethane		20.0	21.2	ug/L	0.318	5.80	30	
Dichlorodifluoromethane		20.0	20.7	ug/L	0.375	3.50	30	
Isopropylbenzene		20.0	19.5	ug/L	1.56	2.70	30	
Methyl acetate		20.0	28.0	ug/L	0.124	39.9	30	*
Methyl Tert Butyl Ether		20.0	19.7	ug/L	0.516	1.40	30	
Methylcyclohexane		20.0	20.3	ug/L	0.393	1.60	30	
Methylene Chloride		20.0	19.8	ug/L	0.255	0.900	30	

KEMRON FORMS - Modified 11/21/2006
Version 1.5 PDF File ID: 659353
Report generated 01/02/2007 16:01

KEMRON Environmental Services

ALTERNATE SOURCE CALIBRATION REPORT

00095972

Login Number: L0612485 Run Date: 11/20/2006 Sample ID: WG227929-12

Instrument ID: HPMS6 Run Time: 17:01 Method: 8260B

File ID: 6M62051 Analyst: CMS

ICal Workgroup: WG227929 Cal ID: HPMS6 - 20-NOV-06

Analyte		Expected	Found	Units	RF	%D	UCL	Q
Styrene		20.0	21.3	ug/L	1.09	6.60	30	
Tetrachloroethene		20.0	20.6	ug/L	0.407	3.10	30	
trans-1,3-Dichloropropene		20.0	20.2	ug/L	0.444	1.00	30	
Trichloroethene		20.0	21.6	ug/L	0.300	8.00	30	
Trichlorofluoromethane		20.0	18.4	ug/L	0.491	8.10	30	
Xylenes		60.0	63.5	ug/L	0.657	5.90	30	
1,2-Dichloroethene		40.0	41.5	ug/L	0.270	3.80	30	
o-Xylene		20.0	20.8	ug/L	0.638	4.20	30	
m-,p-Xylene		40.0	42.7	ug/L	0.676	6.70	30	

* Exceeds %D Limit

CCC Calibration Check Compounds
SPCC System Performance Check Compounds

KEMRON FORMS - Modified 11/21/2006
Version 1.5 PDF File ID: 659353
Report generated 01/02/2007 16:01

CONTINUING CALIBRATION VERIFICATION (CCV)

00095973

Login Number: L0612485 Run Date: 12/27/2006 Sample ID: WG230323-02
Instrument ID: HPMS11 Run Time: 08:46 Method: 8260B
File ID: 11M39116 Analyst: CMS
Workgroup (AAB#): WG230324 Cal ID: HPMS11 - 28-NOV-06

Analyte		Expected	Found	UNITS	RF	%D	UCL	Q
1,1-Dichloroethene	CCC	50.0	55.0	ug/L	0.222	9.90	20	
1,2-Dichloropropane	CCC	50.0	46.1	ug/L	0.233	7.80	20	
Chloroform	CCC	50.0	51.4	ug/L	0.442	2.90	20	
Ethylbenzene	CCC	50.0	52.4	ug/L	0.492	4.80	20	
Toluene	CCC	50.0	51.8	ug/L	1.33	3.60	20	
Vinyl Chloride	CCC	50.0	53.0	ug/L	0.198	6.10	20	
1,1,2,2-Tetrachloroethane	SPCC	50.0	44.4	ug/L	0.346	11.1	40	
1,1-Dichloroethane	SPCC	50.0	49.9	ug/L	0.485	0.200	40	
Bromoform	SPCC	50.0	44.7	ug/L	0.154	10.7	40	
Chlorobenzene	SPCC	50.0	49.8	ug/L	0.867	0.500	40	
Chloromethane	SPCC	50.0	49.6	ug/L	0.267	0.800	40	
1,1,1-Trichloroethane		50.0	55.3	ug/L	0.428	10.6	40	
1,1,2-Trichloro-1,2,2-Trifluoroethane		50.0	53.1	ug/L	0.235	6.10	40	
1,1,2-Trichloroethane		50.0	46.2	ug/L	0.188	7.70	40	
1,2,4-Trichlorobenzene		50.0	44.9	ug/L	0.806	10.3	40	
1,2-Dibromo-3-Chloropropane		50.0	40.2	ug/L	0.0617	19.6	40	
1,2-Dibromoethane		50.0	46.8	ug/L	0.191	6.40	40	
1,2-Dichlorobenzene		50.0	48.0	ug/L	1.17	4.00	40	
1,2-Dichloroethane		50.0	47.1	ug/L	0.321	5.80	40	
cis-1,2-Dichloroethene		50.0	51.7	ug/L	0.252	3.50	40	
trans-1,2-Dichloroethene		50.0	53.0	ug/L	0.240	5.90	40	
1,3-Dichlorobenzene		50.0	50.4	ug/L	1.38	0.800	40	
1,4-Dichlorobenzene		50.0	48.5	ug/L	1.40	2.90	40	
2-Butanone		50.0	41.4	ug/L	0.0474	17.1	40	
2-Hexanone		50.0	40.8	ug/L	0.105	18.4	40	
4-Methyl-2-Pentanone		50.0	38.7	ug/L	0.0456	22.6	40	
Acetone		50.0	52.6	ug/L	0.0381	5.10	40	
Benzene		50.0	49.6	ug/L	0.892	0.800	40	
Bromodichloromethane		50.0	50.6	ug/L	0.297	1.20	40	
Bromomethane		50.0	47.6	ug/L	0.174	4.80	40	
Carbon Disulfide		50.0	52.0	ug/L	0.662	4.00	40	
Carbon Tetrachloride		50.0	58.8	ug/L	0.397	17.7	40	
Chloroethane		50.0	51.7	ug/L	0.186	3.50	40	
cis-1,3-Dichloropropene		50.0	48.8	ug/L	0.335	2.30	40	
Cyclohexane		50.0	49.0	ug/L	0.484	1.90	40	
Dibromochloromethane		50.0	51.4	ug/L	0.258	2.80	40	
Dichlorodifluoromethane		50.0	58.5	ug/L	0.375	16.9	40	
Isopropylbenzene		50.0	54.2	ug/L	1.56	8.30	40	
Methyl acetate		50.0	47.6	ug/L	0.118	4.80	40	
Methyl Tert Butyl Ether		50.0	45.4	ug/L	0.407	9.20	40	
Methylcyclohexane		50.0	49.8	ug/L	0.353	0.500	40	
Methylene Chloride		50.0	48.6	ug/L	0.210	2.80	40	

KEMRON FORMS - Modified 12/11/2006
Version 1.3 PDF File ID: 659359
Report generated 01/02/2007 16:01

KEMRON Environmental Services

CONTINUING CALIBRATION VERIFICATION (CCV)

00095974

Login Number: L0612485 Run Date: 12/27/2006 Sample ID: WG230323-02
Instrument ID: HPMS11 Run Time: 08:46 Method: 8260B
File ID: 11M39116 Analyst: CMS
Workgroup (AAB#): WG230324 Cal ID: HPMS11 - 28-NOV-06

Analyte		Expected	Found	UNITS	RF	%D	UCL	Q
Styrene		50.0	54.5	ug/L	1.00	8.90	40	
Tetrachloroethene		50.0	53.1	ug/L	0.279	6.10	40	
trans-1,3-Dichloropropene		50.0	49.3	ug/L	0.400	1.50	40	
Trichloroethene		50.0	50.8	ug/L	0.245	1.60	40	
Trichlorofluoromethane		50.0	55.1	ug/L	0.491	10.3	40	
Xylenes		150	158	ug/L	0.602	5.70	40	
1,2-Dichloroethene		100	105	ug/L	0.246	4.70	40	
o-Xylene		50.0	52.7	ug/L	0.590	5.40	40	
m-,p-Xylene		100	106	ug/L	0.615	5.80	40	

* Exceeds %D Criteria

CCC Calibration Check Compounds
SPCC System Performance Check Compounds

KEMRON FORMS - Modified 12/11/2006
Version 1.3 PDF File ID: 659359
Report generated 01/02/2007 16:01

KEMRON Environmental Services

CONTINUING CALIBRATION VERIFICATION (CCV)

00095975

Login Number: L0612485 Run Date: 12/28/2006 Sample ID: WG230416-02
Instrument ID: HPMS11 Run Time: 08:09 Method: 8260B
File ID: 11M39143 Analyst: CMS
Workgroup (AAB#): WG230417 Cal ID: HPMS11 - 28-NOV-06

Analyte		Expected	Found	UNITS	RF	%D	UCL	Q
1,1-Dichloroethene	CCC	50.0	56.5	ug/L	0.228	13.0	20	
1,2-Dichloropropane	CCC	50.0	46.9	ug/L	0.237	6.10	20	
Chloroform	CCC	50.0	53.6	ug/L	0.461	7.20	20	
Ethylbenzene	CCC	50.0	54.5	ug/L	0.511	9.00	20	
Toluene	CCC	50.0	53.5	ug/L	1.37	6.90	20	
Vinyl Chloride	CCC	50.0	60.0	ug/L	0.222	20.0	20	
1,1,2,2-Tetrachloroethane	SPCC	50.0	44.0	ug/L	0.342	12.0	40	
1,1-Dichloroethane	SPCC	50.0	51.5	ug/L	0.500	3.00	40	
Bromoform	SPCC	50.0	46.3	ug/L	0.160	7.30	40	
Chlorobenzene	SPCC	50.0	51.2	ug/L	0.892	2.40	40	
Chloromethane	SPCC	50.0	51.9	ug/L	0.279	3.70	40	
1,1,1-Trichloroethane		50.0	59.8	ug/L	0.464	19.7	40	
1,1,2-Trichloro-1,2,2-Trifluoroethane		50.0	55.3	ug/L	0.245	10.5	40	
1,1,2-Trichloroethane		50.0	46.5	ug/L	0.190	7.00	40	
1,2,4-Trichlorobenzene		50.0	45.5	ug/L	0.818	8.90	40	
1,2-Dibromo-3-Chloropropane		50.0	41.0	ug/L	0.0629	18.0	40	
1,2-Dibromoethane		50.0	47.7	ug/L	0.195	4.50	40	
1,2-Dichlorobenzene		50.0	49.5	ug/L	1.21	1.10	40	
1,2-Dichloroethane		50.0	50.6	ug/L	0.345	1.30	40	
cis-1,2-Dichloroethene		50.0	52.4	ug/L	0.255	4.80	40	
trans-1,2-Dichloroethene		50.0	54.6	ug/L	0.248	9.20	40	
1,3-Dichlorobenzene		50.0	52.2	ug/L	1.43	4.40	40	
1,4-Dichlorobenzene		50.0	49.7	ug/L	1.43	0.600	40	
2-Butanone		50.0	43.8	ug/L	0.0502	12.3	40	
2-Hexanone		50.0	43.0	ug/L	0.111	13.9	40	
4-Methyl-2-Pentanone		50.0	40.9	ug/L	0.0481	18.3	40	
Acetone		50.0	56.0	ug/L	0.0405	12.0	40	
Benzene		50.0	51.1	ug/L	0.918	2.20	40	
Bromodichloromethane		50.0	53.6	ug/L	0.315	7.10	40	
Bromomethane		50.0	43.2	ug/L	0.158	13.6	40	
Carbon Disulfide		50.0	54.5	ug/L	0.694	9.10	40	
Carbon Tetrachloride		50.0	62.9	ug/L	0.424	25.8	40	
Chloroethane		50.0	54.7	ug/L	0.197	9.40	40	
cis-1,3-Dichloropropene		50.0	49.9	ug/L	0.343	0.200	40	
Cyclohexane		50.0	50.7	ug/L	0.501	1.40	40	
Dibromochloromethane		50.0	53.0	ug/L	0.266	6.10	40	
Dichlorodifluoromethane		50.0	62.5	ug/L	0.401	25.1	40	
Isopropylbenzene		50.0	56.4	ug/L	1.62	12.8	40	
Methyl acetate		50.0	54.0	ug/L	0.134	8.00	40	
Methyl Tert Butyl Ether		50.0	47.9	ug/L	0.430	4.10	40	
Methylcyclohexane		50.0	51.6	ug/L	0.366	3.10	40	
Methylene Chloride		50.0	51.2	ug/L	0.221	2.40	40	

KEMRON FORMS - Modified 12/11/2006
Version 1.3 PDF File ID: 659359
Report generated 01/02/2007 16:01

KEMRON Environmental Services

CONTINUING CALIBRATION VERIFICATION (CCV)

00095976

Login Number: L0612485 Run Date: 12/28/2006 Sample ID: WG230416-02
Instrument ID: HPMS11 Run Time: 08:09 Method: 8260B
File ID: 11M39143 Analyst: CMS
Workgroup (AAB#): WG230417 Cal ID: HPMS11 - 28-NOV-06

Analyte		Expected	Found	UNITS	RF	%D	UCL	Q
Styrene		50.0	55.9	ug/L	1.03	11.8	40	
Tetrachloroethene		50.0	56.0	ug/L	0.295	12.0	40	
trans-1,3-Dichloropropene		50.0	50.6	ug/L	0.411	1.10	40	
Trichloroethene		50.0	52.7	ug/L	0.254	5.40	40	
Trichlorofluoromethane		50.0	59.7	ug/L	0.532	19.4	40	
Xylenes		150	165	ug/L	0.625	9.70	40	
o-Xylene		50.0	54.7	ug/L	0.612	9.40	40	
1,2-Dichloroethene		100	107	ug/L	0.251	7.00	40	
m-,p-Xylene		100	110	ug/L	0.639	9.90	40	

* Exceeds %D Criteria

CCC Calibration Check Compounds
SPCC System Performance Check Compounds

KEMRON FORMS - Modified 12/11/2006
Version 1.3 PDF File ID: 659359
Report generated 01/02/2007 16:01

KEMRON Environmental Services

CONTINUING CALIBRATION VERIFICATION (CCV)

00095977

Login Number: L0612485 Run Date: 12/28/2006 Sample ID: WG230414-02
Instrument ID: HPMS6 Run Time: 08:05 Method: 8260B
File ID: 6M62909 Analyst: CMS
Workgroup (AAB#): WG230415 Cal ID: HPMS6 - 20-NOV-06

Analyte		Expected	Found	UNITS	RF	%D	UCL	Q
1,1-Dichloroethene	CCC	50.0	51.8	ug/L	0.382	3.50	20	
1,2-Dichloropropane	CCC	50.0	48.8	ug/L	0.215	2.50	20	
Chloroform	CCC	50.0	50.0	ug/L	0.493	0.100	20	
Ethylbenzene	CCC	50.0	52.6	ug/L	0.537	5.20	20	
Toluene	CCC	50.0	51.2	ug/L	1.40	2.40	20	
Vinyl Chloride	CCC	50.0	49.7	ug/L	0.173	0.600	20	
1,1,2,2-Tetrachloroethane	SPCC	50.0	46.6	ug/L	0.362	6.80	40	
1,1-Dichloroethane	SPCC	50.0	51.2	ug/L	0.442	2.40	40	
Bromoform	SPCC	50.0	51.3	ug/L	0.200	2.70	40	
Chlorobenzene	SPCC	50.0	51.8	ug/L	0.982	3.60	40	
Chloromethane	SPCC	50.0	34.9	ug/L	0.173	30.3	40	
1,1,1-Trichloroethane		50.0	52.6	ug/L	0.486	5.20	40	
1,1,2-Trichloro-1,2,2-Trifluoroethane		50.0	48.7	ug/L	0.252	2.70	40	
1,1,2-Trichloroethane		50.0	47.7	ug/L	0.206	4.60	40	
1,2,4-Trichlorobenzene		50.0	50.8	ug/L	1.00	1.60	40	
1,2-Dibromo-3-Chloropropane		50.0	49.8	ug/L	0.0776	0.400	40	
1,2-Dibromoethane		50.0	48.0	ug/L	0.223	4.00	40	
1,2-Dichlorobenzene		50.0	50.8	ug/L	1.33	1.70	40	
1,2-Dichloroethane		50.0	46.3	ug/L	0.313	7.30	40	
cis-1,2-Dichloroethene		50.0	53.0	ug/L	0.284	6.00	40	
trans-1,2-Dichloroethene		50.0	54.0	ug/L	0.272	8.00	40	
1,3-Dichlorobenzene		50.0	52.3	ug/L	1.52	4.60	40	
1,4-Dichlorobenzene		50.0	51.1	ug/L	1.54	2.30	40	
2-Butanone		50.0	43.5	ug/L	0.0417	12.9	40	
2-Hexanone		50.0	43.4	ug/L	0.0851	13.3	40	
4-Methyl-2-Pentanone		50.0	44.1	ug/L	0.0393	11.8	40	
Acetone		50.0	47.4	ug/L	0.0333	5.20	40	
Benzene		50.0	51.0	ug/L	0.955	2.00	40	
Bromodichloromethane		50.0	49.9	ug/L	0.344	0.200	40	
Bromomethane		50.0	41.2	ug/L	0.142	17.6	40	
Carbon Disulfide		50.0	54.2	ug/L	0.716	8.40	40	
Carbon Tetrachloride		50.0	54.8	ug/L	0.443	9.50	40	
Chloroethane		50.0	44.5	ug/L	0.149	11.0	40	
cis-1,3-Dichloropropene		50.0	51.3	ug/L	0.392	2.70	40	
Cyclohexane		50.0	52.3	ug/L	0.362	4.60	40	
Dibromochloromethane		50.0	50.7	ug/L	0.304	1.30	40	
Dichlorodifluoromethane		50.0	22.4	ug/L	0.162	55.2	40	*
Isopropylbenzene		50.0	53.2	ug/L	1.71	6.40	40	
Methyl acetate		50.0	60.9	ug/L	0.108	21.8	40	
Methyl Tert Butyl Ether		50.0	45.1	ug/L	0.472	9.70	40	
Methylcyclohexane		50.0	53.2	ug/L	0.412	6.30	40	
Methylene Chloride		50.0	46.6	ug/L	0.240	6.70	40	

KEMRON FORMS - Modified 12/11/2006
Version 1.3 PDF File ID: 659359
Report generated 01/02/2007 16:01

KEMRON Environmental Services

CONTINUING CALIBRATION VERIFICATION (CCV)

00095978

Login Number: L0612485 Run Date: 12/28/2006 Sample ID: WG230414-02
Instrument ID: HPMS6 Run Time: 08:05 Method: 8260B
File ID: 6M62909 Analyst: CMS
Workgroup (AAB#): WG230415 Cal ID: HPMS6 - 20-NOV-06

Analyte		Expected	Found	UNITS	RF	%D	UCL	Q
Styrene		50.0	53.2	ug/L	1.09	6.30	40	
Tetrachloroethene		50.0	53.6	ug/L	0.423	7.20	40	
trans-1,3-Dichloropropene		50.0	49.7	ug/L	0.437	0.500	40	
Trichloroethene		50.0	54.2	ug/L	0.301	8.40	40	
Trichlorofluoromethane		50.0	44.7	ug/L	0.478	10.6	40	
Xylenes		150	158	ug/L	0.656	5.50	40	
o-Xylene		50.0	52.5	ug/L	0.643	5.00	40	
1,2-Dichloroethene		100	107	ug/L	0.278	7.00	40	
m-,p-Xylene		100	106	ug/L	0.670	5.70	40	

* Exceeds %D Criteria

CCC Calibration Check Compounds
SPCC System Performance Check Compounds

KEMRON FORMS - Modified 12/11/2006
Version 1.3 PDF File ID: 659359
Report generated 01/02/2007 16:01

KEMRON ENVIRONMENTAL SERVICES
INTERNAL STANDARD AREA SUMMARY
(COMPARED TO CCV)

00095979

Login Number:L0612485
Instrument ID:HPMS11
Workgroup (AAB#):WG230324

CCV Number:WG230323-02
CAL ID: HPMS11-28-NOV-06
Matrix:WATER

Sample Number	Dilution	Tag	IS-1	IS-2	IS-3
WG230323-02	NA	NA	344049	625437	855796
Upper Limit	NA	NA	688098	1250874	1711592
Lower Limit	NA	NA	172025	312719	427898
L0612485-01	1.00	01	268054	492130	667231
L0612485-02	1.00	01	265904	489674	653423
L0612485-03	1.00	01	283564	532160	715581
L0612485-04	1.00	01	286246	523260	712514
L0612485-05	1.00	01	278060	512416	684098
L0612485-06	1.00	01	279289	511277	692142
WG230324-01	1.00	01	308958	579257	778875
WG230324-02	1.00	01	329209	583584	780887
WG230324-03	1.00	01	320573	580842	770453

IS-1 - 1,4-Dichlorobenzene-d4
IS-2 - Chlorobenzene-d5
IS-3 - Fluorobenzene

Underline = Response outside limits

KEMRON FORMS - Modified 04/18/2006
Version 1.3 PDF File ID: 659361
Report generated 01/02/2007 16:01

KEMRON ENVIRONMENTAL SERVICES
INTERNAL STANDARD AREA SUMMARY
(COMPARED TO CCV)

00095980

Login Number:L0612485
Instrument ID:HPMS6
Workgroup (AAB#):WG230415

CCV Number:WG230414-02
CAL ID: HPMS6-20-NOV-06
Matrix:WATER

Sample Number	Dilution	Tag	IS-1	IS-2	IS-3
WG230414-02	NA	NA	330848	550916	709076
Upper Limit	NA	NA	661696	1101832	1418152
Lower Limit	NA	NA	165424	275458	354538
L0612485-07	1.00	01	271341	468346	603212
WG230415-01	1.00	01	307541	517618	673882
WG230415-02	1.00	01	309210	515193	667041
WG230415-03	1.00	01	302753	510937	657602

IS-1 - 1,4-Dichlorobenzene-d4
IS-2 - Chlorobenzene-d5
IS-3 - Fluorobenzene

Underline = Response outside limits

KEMRON FORMS - Modified 04/18/2006
Version 1.3 PDF File ID: 659361
Report generated 01/02/2007 16:01

KEMRON ENVIRONMENTAL SERVICES
INTERNAL STANDARD AREA SUMMARY
(COMPARED TO CCV)

00095981

Login Number: L0612485
Instrument ID: HPMS11
Workgroup (AAB#): WG230417

CCV Number: WG230416-02
CAL ID: HPMS11-28-NOV-06
Matrix: WATER

Sample Number	Dilution	Tag	IS-1	IS-2	IS-3
WG230416-02	NA	NA	318312	573297	777044
Upper Limit	NA	NA	636624	1146594	1554088
Lower Limit	NA	NA	159156	286649	388522
L0612485-04	10.0	DL01	280733	519229	693795
L0612485-06	10.0	DL01	274019	511702	683595
WG230417-01	1.00	01	289518	530620	720675
WG230417-02	1.00	01	309459	550066	727295

IS-1 - 1,4-Dichlorobenzene-d4
IS-2 - Chlorobenzene-d5
IS-3 - Fluorobenzene

Underline = Response outside limits

KEMRON FORMS - Modified 04/18/2006
Version 1.3 PDF File ID: 659361
Report generated 01/02/2007 16:01

KEMRON ENVIRONMENTAL SERVICES
INTERNAL STANDARD RETENTION TIME SUMMARY
(COMPARED TO CCV)

00095982

Login Number:L0612485
Instrument ID:HPMS11
Workgroup (AAB#):WG230324

CCV Number:WG230323-02
CAL ID: HPMS11-28-NOV-06
Matrix:WATER

Sample Number	Dilution	Tag	IS-1	IS-2	IS-3
WG230323-02	NA	NA	16.46	13.66	10.04
Upper Limit	NA	NA	16.96	14.16	10.54
Lower Limit	NA	NA	15.96	13.16	9.54
L0612485-01	1.00	01	16.456	13.654	10.03
L0612485-02	1.00	01	16.456	13.659	10.035
L0612485-03	1.00	01	16.456	13.659	10.03
L0612485-04	1.00	01	16.456	13.659	10.035
L0612485-05	1.00	01	16.456	13.659	10.03
L0612485-06	1.00	01	16.456	13.654	10.035
WG230324-01	1.00	01	16.456	13.654	10.036
WG230324-02	1.00	01	16.456	13.654	10.03
WG230324-03	1.00	01	16.456	13.654	10.03

IS-1 - 1,4-Dichlorobenzene-d4
IS-2 - Chlorobenzene-d5
IS-3 - Fluorobenzene

Underline = Response outside limits

KEMRON FORMS - Modified 04/18/2006
Version 1.3 PDF File ID: 659365
Report generated 01/02/2007 16:02

KEMRON ENVIRONMENTAL SERVICES
INTERNAL STANDARD RETENTION TIME SUMMARY
(COMPARED TO CCV)

00095983

Login Number:L0612485
Instrument ID:HPMS6
Workgroup (AAB#):WG230415

CCV Number:WG230414-02
CAL ID: HPMS6-20-NOV-06
Matrix:WATER

Sample Number	Dilution	Tag	IS-1	IS-2	IS-3
WG230414-02	NA	NA	19.52	15.95	11.45
Upper Limit	NA	NA	20.02	16.45	11.95
Lower Limit	NA	NA	19.02	15.45	10.95
L0612485-07	1.00	01	19.52	15.95	11.45
WG230415-01	1.00	01	19.52	15.95	11.45
WG230415-02	1.00	01	19.51	15.95	11.45
WG230415-03	1.00	01	19.52	15.95	11.45

IS-1 - 1,4-Dichlorobenzene-d4
IS-2 - Chlorobenzene-d5
IS-3 - Fluorobenzene

Underline = Response outside limits

KEMRON FORMS - Modified 04/18/2006
Version 1.3 PDF File ID: 659365
Report generated 01/02/2007 16:02

KEMRON ENVIRONMENTAL SERVICES
INTERNAL STANDARD RETENTION TIME SUMMARY
(COMPARED TO CCV)

00095984

Login Number:L0612485
Instrument ID:HPMS11
Workgroup (AAB#):WG230417

CCV Number:WG230416-02
CAL ID: HPMS11-28-NOV-06
Matrix:WATER

Sample Number	Dilution	Tag	IS-1	IS-2	IS-3
WG230416-02	NA	NA	16.46	13.66	10.04
Upper Limit	NA	NA	16.96	14.16	10.54
Lower Limit	NA	NA	15.96	13.16	9.54
L0612485-04	10.0	DL01	16.455	13.654	10.03
L0612485-06	10.0	DL01	16.456	13.654	10.03
WG230417-01	1.00	01	16.455	13.654	10.035
WG230417-02	1.00	01	16.456	13.654	10.03

IS-1 - 1,4-Dichlorobenzene-d4
IS-2 - Chlorobenzene-d5
IS-3 - Fluorobenzene

Underline = Response outside limits

KEMRON FORMS - Modified 04/18/2006
Version 1.3 PDF File ID: 659365
Report generated 01/02/2007 16:02

KEMRON Environmental Services
Data Checklist

00095985

Date: 27-SEP-2006
Analyst: JLS
Analyst: NA
Method: RSK175
Instrument: HP16
Curve Workgroup: NA
Runlog ID: 12513
Analytical Workgroups: WG223500, WG223502

System Performance Check	NA
BFB	NA
Initial Calibration	X
Average RF	X
Linear Reg or Higher Order Curve	X
Second Source standard % Difference	X
Continuing Calibration /Check Standards	X
Project/Client Specific Requirements	X
Special Standards	NA
Blanks	X
TCL's	X
Surrogates	NA
LCS (Laboratory Control Sample)	X
Recoveries	X
Surrogates	NA
MS/MSD/Duplicates	X
Samples	X
TCL Hits	X
Spectra of TCL Hits	NA
Surrogates	NA
Internal Standards Criteria	NA
Calculations & Correct Factors	X
Dilutions Run	X
Reruns	X
Manual Integrations	NA
Excel Spreadsheets	X
Case Narrative	X
Narrative Summary	NA
Results Reporting/Data Qualifiers	X
Client Data Package Assembly	X
Check for Completeness	X
Primary Reviewer	JLS
Secondary Reviewer	MDA
Check for compliance with method and project specific requirements	X
Check the completeness of reported information	X
Check the information for the report narrative	X
Check the reasonableness of the results	X

Primary Reviewer:
28-SEP-2006

Janice Schimmel

Secondary Reviewer:
28-SEP-2006

Generated: SEP-29-2006 13:00:04

00095986

KEMRON Environmental Services
Data Checklist

Date: 20-DEC-2006
Analyst: JLS
Analyst: NA
Method: RSK175
Instrument: HP16
Curve Workgroup: NA
Runlog ID: 13880
Analytical Workgroups: WG230008

System Performance Check	NA
BFB	NA
Initial Calibration	X
Average RF	X
Linear Reg or Higher Order Curve	X
Second Source standard % Difference	X
Continuing Calibration /Check Standards	X
Project/Client Specific Requirements	X
Special Standards	NA
Blanks	X
TCL's	X
Surrogates	NA
LCS (Laboratory Control Sample)	X
Recoveries	X
Surrogates	NA
MS/MSD/Duplicates	X
Samples	X
TCL Hits	X
Spectra of TCL Hits	NA
Surrogates	NA
Internal Standards Criteria	NA
Calculations & Correct Factors	X
Dilutions Run	X
Reruns	X
Manual Integrations	NA
Excel Spreadsheets	X
Case Narrative	X
Narrative Summary	NA
Results Reporting/Data Qualifiers	X
Client Data Package Assembly	X
Check for Completeness	X
Primary Reviewer	JLS
Secondary Reviewer	MDA
Check for compliance with method and project specific requirements	X
Check the completeness of reported information	X
Check the information for the report narrative	X
Check the reasonableness of the results	X

Primary Reviewer:
21-DEC-2006

Janice Schimmel

Secondary Reviewer:
26-DEC-2006

Generated: DEC-26-2006 13:37:50

KEMRON Environmental Services
Data Checklist

00095987

Date: 21-DEC-2006
Analyst: JLS
Analyst: FB
Method: RSK175
Instrument: HP16
Curve Workgroup: NA
Runlog ID: 13912
Analytical Workgroups: WG230108

System Performance Check	NA
BFB	NA
Initial Calibration	X
Average RF	X
Linear Reg or Higher Order Curve	X
Second Source standard % Difference	X
Continuing Calibration /Check Standards	X
Project/Client Specific Requirements	X
Special Standards	NA
Blanks	X
TCL's	X
Surrogates	NA
LCS (Laboratory Control Sample)	X
Recoveries	X
Surrogates	NA
MS/MSD/Duplicates	X
Samples	X
TCL Hits	X
Spectra of TCL Hits	NA
Surrogates	NA
Internal Standards Criteria	NA
Calculations & Correct Factors	X
Dilutions Run	X
Reruns	X
Manual Integrations	NA
Excel Spreadsheets	X
Case Narrative	X
Narrative Summary	NA
Results Reporting/Data Qualifiers	X
Client Data Package Assembly	X
Check for Completeness	X
Primary Reviewer	SMH
Secondary Reviewer	MDA
Check for compliance with method and project specific requirements	X
Check the completeness of reported information	X
Check the information for the report narrative	X
Check the reasonableness of the results	X

Primary Reviewer:
26-DEC-2006

Secondary Reviewer:
27-DEC-2006

Generated: DEC-27-2006 10:58:43

KEMRON Environmental Services

Instrument Run Log

00095988

Instrument: HP16 Dataset: 092706

Analyst1: JLS Analyst2: NA

Method: RSK175 SOP: RSK01 Rev: 7

Method: 5021 SOP: RSK01 Rev: 7

Maintenance Log ID: 15882

Internal Standard: NA Surrogate Standard: NA

CCV: STD15381 LCS: STD15381 MS/MSD: STD15381

Column 1 ID: RTQPLOT Column 2 ID: RTQPLOT

Workgroups: WG223500, WG223502

Comments:

Seq.	File ID	Sample Information	pH	Mat	Dil	Reference	Date/Time
1	16G4196	WG223500-01 .1ug/ml STD	NA	1	1	STD15381	09/27/06 13:50
2	16G4197	WG223500-02 1ug/ml STD	NA	1	1	STD15381	09/27/06 14:04
3	16G4198	WG223500-03 10ug/ml STD	NA	1	1	STD15381	09/27/06 14:18
4	16G4199	WG223500-04 20ug/ml STD	NA	1	1	STD15381	09/27/06 14:32
5	16G4200	WG223500-05 50ug/ml STD	NA	1	1	STD15381	09/27/06 14:46
6	16G4201	WG223500-06 100ug/ml STD	NA	1	1	STD15381	09/27/06 15:01
7	16G4202	WG223500-07 200ug/ml STD	NA	1	1	STD15381	09/27/06 15:15
8	16G4203	WG223500-08 300ug/ml STD	NA	1	1	STD15381	09/27/06 15:29
9	16G4204	WG223500-09 50ug/ml STD	NA	1	1	STD15381	09/27/06 15:43
10	16G4205	WG223502-01 BLANK	NA	1	1		09/27/06 16:14
11	16G4206	WG223502-02 20ug/ml LCS	NA	1	1	STD15381	09/27/06 16:28
12	16G4207	WG223502-03 20ug/ml LCS DUP	NA	1	1	STD15381	09/27/06 16:42
13	16G4208	L0609385-08 B 10X	7	1	10		09/27/06 16:56
14	16G4209	L0609387-07 A	7	1	1		09/27/06 17:10
15	16G4210	L0609505-02 A	7	1	1		09/27/06 17:24
16	16G4211	L0609417-01 A	7	1	1		09/27/06 17:38
17	16G4212	L0609417-02 A	7	1	1		09/27/06 17:52
18	16G4213	L0609417-03 A	7	1	1		09/27/06 18:06
19	16G4214	L0609417-04 A MS	7	1	1	STD15381	09/27/06 18:20
20	16G4215	RINSE	NA	1	1		09/27/06 18:34
21	16G4216	RINSE	NA	1	1		09/27/06 18:48
22	16G4217	WG223501-02 50ug/ml STD	NA	1	1	STD15381	09/27/06 19:02
23	16G4218	L0609417-05 A MSD	7	1	1	STD15381	09/27/06 19:16
24	16G4219	L0609417-06 A	7	1	1		09/27/06 19:30
25	16G4220	L0609417-07 A	7	1	1		09/27/06 19:44
26	16G4221	L0609417-08 A	7	1	1		09/27/06 19:58
27	16G4222	L0609417-09 A	7	1	1		09/27/06 20:12
28	16G4223	L0609439-01 A	<2	1	1		09/27/06 20:26
29	16G4224	L0609439-02 A MS	<2	1	1	STD15381	09/27/06 20:40
30	16G4225	L0609439-03 A MSD	<2	1	1	STD15381	09/27/06 20:54
31	16G4226	L0609439-04 A	<2	1	1		09/27/06 21:08
32	16G4227	L0609439-05 A	<2	1	1		09/27/06 21:22

Approved: September 28, 2006

KEMRON Environmental Services

Instrument Run Log

00095989

Instrument: HP16 Dataset: 092706
Analyst1: JLS Analyst2: NA
Method: RSK175 SOP: RSK01 Rev: 7
Method: 5021 SOP: RSK01 Rev: 7

Maintenance Log ID: 15882

Internal Standard: NA Surrogate Standard: NA
CCV: STD15381 LCS: STD15381 MS/MSD: STD15381

Column 1 ID: RTQPLOT Column 2 ID: RTQPLOT
Workgroups: WG223500, WG223502

Seq.	File ID	Sample Information	pH	Mat	Dil	Reference	Date/Time
33	16G4228	RINSE	NA	1	1		09/27/06 21:36
34	16G4229	RINSE	NA	1	1		09/27/06 21:50
35	16G4230	WG223501-03 50ug/ml STD	NA	1	1	STD15381	09/27/06 22:04
36	16G4231	L0609439-06 A	<2	1	1		09/27/06 22:18
37	16G4232	L0609439-07 A	<2	1	1		09/27/06 22:32
38	16G4233	L0609509-09 A	7	1	1		09/27/06 22:46
39	16G4234	RINSE	NA	1	1		09/27/06 23:00
40	16G4235	RINSE	NA	1	1		09/27/06 23:14
41	16G4236	WG223501-04 50ug/ml STD	NA	1	1	STD15381	09/27/06 23:29

Comments

Seq.	Rerun	Dil.	Reason	Analytes
16	X	100	Over Calibration Range	Methane
File ID: 16G4211				
17	X	100	Over Calibration Range	Methane
File ID: 16G4212				
32	X	10	Over Calibration Range	Methane
File ID: 16G4227				
36	X	100	Over Calibration Range	Methane
File ID: 16G4231				
37	X	100	Over Calibration Range	Methane
File ID: 16G4232				
38	X	100	Over Calibration Range	Methane
File ID: 16G4233				

Approved: September 28, 2006

KEMRON Environmental Services

00095990

Instrument Run Log

Instrument: HP16 Dataset: 122006
Analyst1: JLS Analyst2: NA
Method: RSK175 SOP: RSK01 Rev: 7
Method: 5021 SOP: RSK01 Rev: 7

Maintenance Log ID: 17145

Internal Standard: NA Surrogate Standard: NA
CCV: STD15381 LCS: STD15381 MS/MSD: STD15381

Column 1 ID: RTQPLOT Column 2 ID: RTQPLOT
Workgroups: WG230008

Comments:

Seq.	File ID	Sample Information	pH	Mat	Dil	Reference	Date/Time
1	16G5670	WG230007-01 50umol/mol STD	NA	1	1	STD15381	12/20/06 11:27
2	16G5671	WG230008-01 BLANK	NA	1	1		12/20/06 11:41
3	16G5672	WG230008-02 20umol/mol LCS	NA	1	1	STD15381	12/20/06 11:55
4	16G5673	WG230008-03 20umol/mol LCS DUP	NA	1	1	STD15381	12/20/06 12:09
5	16G5674	WG230008-02 20umol/mol LCS	NA	1	1	STD15381	12/20/06 13:19
6	16G5675	WG230008-03 20umol/mol LCS DUP	NA	1	1	STD15381	12/20/06 13:33
7	16G5676	WG230008-02 20umol/mol LCS	NA	1	1	STD15381	12/20/06 13:52
8	16G5677	WG230008-03 20umol/mol LCS DUP	NA	1	1	STD15381	12/20/06 14:06
9	16G5678	WG230007-02 50umol/mol STD	NA	1	1	STD15381	12/20/06 15:08
10	16G5679	L0612460-06 B 10X	7	1	10		12/20/06 16:11
11	16G5680	L0612465-02 B 50X	7	1	50		12/20/06 16:25
12	16G5681	L0612465-03 B 100X	7	1	100		12/20/06 16:39
13	16G5682	L0612465-04 B 10X	7	1	10		12/20/06 16:53
14	16G5683	L0612465-05 B 50X	7	1	50		12/20/06 17:07
15	16G5684	L0612471-02 A	<2	1	1		12/20/06 17:21
16	16G5685	L0612471-04 A	<2	1	1		12/20/06 17:35
17	16G5686	L0612485-01 A	7	1	1		12/20/06 17:49
18	16G5687	L0612485-02 A	7	1	1		12/20/06 18:04
19	16G5688	L0612485-03 A	7	1	1		12/20/06 18:18
20	16G5689	WG230007-03 50umol/mol STD	NA	1	1	STD15381	12/20/06 18:32
21	16G5690	L0612485-04 A	7	1	1		12/20/06 18:46
22	16G5691	L0612485-05 A	7	1	1		12/20/06 19:00
23	16G5692	L0612485-06 A	7	1	1		12/20/06 19:14
24	16G5693	WG230007-04 50umol/mol STD	NA	1	1	STD15381	12/20/06 19:28

Comments

Seq.	Rerun	Dil.	Reason	Analytes
3	X		LCS failure	Carbon dioxide
File ID: 16G5672				
4	X		LCS failure	Carbon dioxide

Approved: December 26, 2006

KEMRON Environmental Services

Instrument Run Log

00095991

Instrument: HP16 Dataset: 122006

Analyst1: JLS Analyst2: NA

Method: RSK175 SOP: RSK01 Rev: 7

Method: 5021 SOP: RSK01 Rev: 7

Maintenance Log ID: 17145

Internal Standard: NA Surrogate Standard: NA

CCV: STD15381 LCS: STD15381 MS/MSD: STD15381

Column 1 ID: RTQPLOT Column 2 ID: RTQPLOT

Workgroups: WG230008

Comments

Seq.	Rerun	Dil.	Reason	Analytes
File ID: 16G5673				
5	X		LCS failure	Carbon dioxiide
File ID: 16G5674				
6	X		LCS failure	Carbon dioxide
File ID: 16G5675				
18	X	10	Over Calibration Range	Methane
File ID: 16G5687				

Approved: December 26, 2006

00095992

KEMRON Environmental Services

Instrument Run Log

Instrument: HP16 Dataset: 122106

Analyst1: JLS Analyst2: FB

Method: RSK175 SOP: RSK01 Rev: 7

Method: 5021 SOP: RSK01 Rev: 7

Maintenance Log ID: 17173

Internal Standard: NA Surrogate Standard: NA

CCV: STD15381 LCS: STD15381 MS/MSD: NA

Column 1 ID: RTQPLOT Column 2 ID: NA

Workgroups: WG230108

Comments:

Seq.	File ID	Sample Information	pH	Mat	Dil	Reference	Date/Time
1	16G5694	WG230009-01 50umol/mol STD	NA	1	1	STD15381	12/21/06 09:04
2	16G5695	WG230108-01 BLANK	NA	1	1		12/21/06 09:19
3	16G5696	WG230108-02 20umol/mol LCS	NA	1	1	STD15381	12/21/06 09:33
4	16G5697	WG230108-03 20umol/mol LCS DUP	NA	1	1	STD15381	12/21/06 09:47
5	16G5698	L0612274-02 B 50X	7	1	50		12/21/06 12:19
6	16G5699	L0612274-05 B 50X	7	1	50		12/21/06 12:33
7	16G5700	L0612274-06 B 50X	7	1	50		12/21/06 12:54
8	16G5701	L0612274-07 B 50X	7	1	50		12/21/06 13:08
9	16G5702	L0612275-01 B 50X	7	1	50		12/21/06 13:22
10	16G5703	L0612275-02 B 50X	7	1	50		12/21/06 13:36
11	16G5704	L0612275-04 B 50X	7	1	50		12/21/06 13:50
12	16G5705	WG230009-02 50umol/mol STD	NA	1	1	STD15381	12/21/06 14:04
13	16G5706	L0612295-01 B 50X	7	1	50		12/21/06 14:18
14	16G5707	L0612295-03 B 50X	7	1	50		12/21/06 14:32
15	16G5708	L0612296-01 B 50X	7	1	50		12/21/06 14:46
16	16G5709	L0612296-02 B 50X	7	1	50		12/21/06 15:00
17	16G5710	L0612296-04 A 10X	7	1	10		12/21/06 15:14
18	16G5711	L0612336-01 A 10X	7	1	10		12/21/06 15:28
19	16G5712	L0612336-02 A 10X	7	1	10		12/21/06 15:42
20	16G5713	L0612336-03 A 10X	7	1	10		12/21/06 15:56
21	16G5714	L0612368-01 A 10X	7	1	10		12/21/06 16:10
22	16G5715	L0612368-02 A 10X	7	1	10		12/21/06 16:24
23	16G5716	WG230009-03 50umol/mol	NA	1	1	STD15381	12/21/06 16:38
24	16G5717	L0612368-04 A 10X	7	1	10		12/21/06 16:53
25	16G5718	L0612386-01 A 10X	7	1	10		12/21/06 17:07
26	16G5719	L0612485-02 A 10X	7	1	10		12/21/06 17:21
27	16G5720	WG230009-04 50umol/mol	NA	1	1	STD15381	12/21/06 17:35

Comments

Seq.	Rerun	Dil.	Reason	Analytes
17	X	50	Over Calibration Range	CO2

Approved: December 27, 2006

KEMRON Environmental Services

Instrument Run Log

00095993

Instrument: HP16 Dataset: 122106
Analyst1: JLS Analyst2: FB
Method: RSK175 SOP: RSK01 Rev: 7
Method: 5021 SOP: RSK01 Rev: 7

Maintenance Log ID: 17173

Internal Standard: NA Surrogate Standard: NA
CCV: STD15381 LCS: STD15381 MS/MSD: NA

Column 1 ID: RTQPLOT Column 2 ID: NA
Workgroups: WG230108

Comments

Seq.	Rerun	Dil.	Reason	Analytes
File ID: 16G5710				
18	X	50	Over Calibration Range	CO2
File ID: 16G5711				
19	X	50	Over Calibration Range	CO2
File ID: 16G5712				
20	X	50	Over Calibration Range	CO2
File ID: 16G5713				
21	X	100	Over Calibration Range	CO2
File ID: 16G5714				
22	X	50	Over Calibration Range	CO2
File ID: 16G5715				
24	X	50	Over Calibration Range	CO2
File ID: 16G5717				
25	X	100	Over Calibration Range	CO2
File ID: 16G5718				

Approved: December 27, 2006

KEMRON Environmental Services
HOLDING TIMES
EQUIVALENT TO AFCEE FORM 9

00095994

Analytical Method: RSK175 AAB#: WG230108
Login Number: L0612485

Client ID	Date Collected	Date Received	Date Extracted	Max Hold Time Ext.	Time Held Ext.	Date Analyzed	Max Hold Time Anal	Time Held Anal.	Q
12WW02	12/19/06	12/20/06	12/21/06	14	2.30	12/21/06	14	2.30	

* EXT = SEE PROJECT QAPP REQUIREMENTS
*ANAL = SEE PROJECT QAPP REQUIREMENTS

KEMRON FORMS - Modified 11/20/2006
Version 1.5 PDF File ID: 657509
Report generated 12/27/2006 11:31

KEMRON Environmental Services
HOLDING TIMES
EQUIVALENT TO AFCEE FORM 9

00095995

Analytical Method: RSK175 AAB#: WG230008

Login Number: L0612485

Client ID	Date Collected	Date Received	Date Extracted	Max Hold Time Ext.	Time Held Ext.	Date Analyzed	Max Hold Time Anal	Time Held Anal.	Q
12WW20	12/19/06	12/20/06	12/20/06	14	1.29	12/20/06	14	1.29	
12WW01	12/19/06	12/20/06	12/20/06	14	1.15	12/20/06	14	1.15	
12WW24-QC	12/19/06	12/20/06	12/20/06	14	1.24	12/20/06	14	1.24	
12WW24	12/19/06	12/20/06	12/20/06	14	1.22	12/20/06	14	1.22	
12WW02	12/19/06	12/20/06	12/20/06	14	1.33	12/20/06	14	1.33	
12WW05	12/19/06	12/20/06	12/20/06	14	1.43	12/20/06	14	1.43	

* EXT = SEE PROJECT QAPP REQUIREMENTS
*ANAL = SEE PROJECT QAPP REQUIREMENTS

KEMRON FORMS - Modified 11/20/2006
Version 1.5 PDF File ID: 657509
Report generated 12/27/2006 11:31

METHOD BLANK SUMMARY

00095996

Login Number: L0612485
Work Group: WG230008
Blank File ID: 16G5671
Blank Sample ID: WG230008-01
Prep Date: 12/20/06 11:41
Instrument ID: HP16
Analyzed Date: 12/20/06 11:41
Method: RSK175
Analyst: JLS

This Method Blank Applies To The Following Samples:

Client ID	Lab Sample ID	Lab File ID	Time Analyzed	TAG
LCS	WG230008-02	16G5676	12/20/06 13:52	01
LCS2	WG230008-03	16G5677	12/20/06 14:06	01
12WW01	L0612485-01	16G5686	12/20/06 17:49	01
12WW02	L0612485-02	16G5687	12/20/06 18:04	01
12WW20	L0612485-03	16G5688	12/20/06 18:18	01
12WW24	L0612485-04	16G5690	12/20/06 18:46	01
12WW05	L0612485-05	16G5691	12/20/06 19:00	01
12WW24-QC	L0612485-06	16G5692	12/20/06 19:14	01

KEMRON Environmental Services

METHOD BLANK SUMMARY

00095997

Login Number: L0612485
Blank File ID: 16G5695
Prep Date: 12/21/06 09:19
Analyzed Date: 12/21/06 09:19
Analyst: JLS

Work Group: WG230108
Blank Sample ID: WG230108-01
Instrument ID: HP16
Method: RSK175

This Method Blank Applies To The Following Samples:

Client ID	Lab Sample ID	Lab File ID	Time Analyzed	TAG
LCS	WG230108-02	16G5696	12/21/06 09:33	01
LCS2	WG230108-03	16G5697	12/21/06 09:47	01
12WW02	L0612485-02	16G5719	12/21/06 17:21	DL01

KEMRON FORMS - Modified 12/07/2006
Version 1.5 PDF File ID: 654481
Report generated 12/27/2006 11:31

KEMRON Environmental Services

METHOD BLANK REPORT

00095998

Login Number: L0612485 Prep Date: 12/20/06 11:41 Sample ID: WG230008-01
Instrument ID: HP16 Run Date: 12/20/06 11:41 Prep Method: 5021
File ID: 16G5671 Analyst: JLS Method: RSK175
Workgroup (AAB#): WG230008 Matrix: Water Units: ug/L
Contract #: DACA56-94-D-0020 Cal ID: HP16-27-SEP-06

Analytes	SQL	PQL	Concentration	Dilution	Qualifier
methane	0.250	0.500	0.493	1	J
ethene	0.250	0.500	0.250	1	U
ethane	0.250	0.500	0.250	1	U

MDL Method Detection Limit
RL Reporting/quantitation Limit

* Analyte concentration > RL

KEMRON FORMS - Modified 12/07/2006
Version 1.5 PDF File ID: 654482
Report generated 12/27/2006 11:31

KEMRON Environmental Services

METHOD BLANK REPORT

00095999

Login Number: L0612485 Prep Date: 12/21/06 09:19 Sample ID: WG230108-01
Instrument ID: HP16 Run Date: 12/21/06 09:19 Prep Method: 5021
File ID: 16G5695 Analyst: JLS Method: RSK175
Workgroup (AAB#): WG230108 Matrix: Water Units: ug/L
Contract #: DACA56-94-D-0020 Cal ID: HP16-27-SEP-06

Analytes	SQL	PQL	Concentration	Dilution	Qualifier
methane	0.250	0.500	0.288	1	J
ethene	0.250	0.500	0.250	1	U
ethane	0.250	0.500	0.250	1	U

MDL Method Detection Limit
RL Reporting/quantitation Limit

* Analyte concentration > RL

KEMRON FORMS - Modified 12/07/2006
Version 1.5 PDF File ID: 654482
Report generated 12/27/2006 11:31

KEMRON Environmental Services

LABORATORY CONTROL SAMPLE (LCS)

00096000

Login Number: L0612485 Analyst: JLS Prep Method: 5021
Instrument ID: HP16 Matrix: Water Method: RSK175
Workgroup (AAB#): WG230008 Units: ug/L
Sample ID: WG230008-02 LCS File ID: 16G5676 Run Date: 12/20/2006 13:52
Sample ID: WG230008-03 LCS2 File ID: 16G5677 Run Date: 12/20/2006 14:06

Analytes	LCS			LCS2			%RPD	%Rec Limits	RPD Lmt	Q
	Known	Found	% REC	Known	Found	% REC				
methane	34.3	35.0	102	34.3	38.1	111	8.58	56 - 140	40	
ethene	59.9	62.2	104	59.9	65.2	109	4.83	56 - 140	40	
ethane	64.2	66.6	104	64.2	71.3	111	6.72	56 - 137	40	

KEMRON FORMS - Modified 07/13/2006
Version 1.5 PDF File ID: 654483
Report generated 12/27/2006 11:31

KEMRON Environmental Services

LABORATORY CONTROL SAMPLE (LCS)

00096001

Login Number: L0612485 Analyst: JLS Prep Method: 5021
Instrument ID: HP16 Matrix: Water Method: RSK175
Workgroup (AAB#): WG230108 Units: ug/L
Sample ID: WG230108-02 LCS File ID: 16G5696 Run Date: 12/21/2006 09:33
Sample ID: WG230108-03 LCS2 File ID: 16G5697 Run Date: 12/21/2006 09:47

Analytes	LCS			LCS2			%RPD	%Rec Limits	RPD Lmt	Q
	Known	Found	% REC	Known	Found	% REC				
methane	34.3	31.7	92.7	34.3	32.2	94.1	1.53	56 - 140	40	
ethene	59.9	55.9	93.2	59.9	54.8	91.4	1.97	56 - 140	40	
ethane	64.2	59.3	92.4	64.2	59.4	92.5	0.113	56 - 137	40	

KEMRON FORMS - Modified 07/13/2006
Version 1.5 PDF File ID: 654483
Report generated 12/27/2006 11:31

KEMRON Environmental Services

INITIAL CALIBRATION SUMMARY

00096002

Login Number: L0612485 **Instrument ID:** HP16

Analytical Method: RSK175 **Initial Calibration Date:** 27-SEP-06 15:29

ICAL Workgroup: WG223500 **Column ID:** F

Analyte		AVG RF	% RSD	LINEAR (R)	QUAD(R^2)
ethane		144300	24.0	1.00	
ethene		145800	30.8	1.00	
methane		88920	57.6	1.00	

R = Correlation coefficient; 0.995 minimum

R^2 = Coefficient of determination; 0.99 minimum

KEMRON Environmental Services

INITIAL CALIBRATION DATA

00096003

Login Number: L0612485
Analytical Method: RSK175

Instrument ID: HP16
Initial Calibration Date: 27-SEP-06 15:29
Column ID: F

Analyte	WG223500-01			WG223500-02			WG223500-03		
	CONC	RESP	RF	CONC	RESP	RF	CONC	RESP	RF
ethane	0.100	22904.0000	229000	1.00	136942.000	136900	10.0	1240863.00	124100
ethene	0.100	25615.0000	256100	1.00	134565.000	134600	10.0	1208632.00	120900
methane	0.100	21538.0000	215400	1.00	77578.0000	77580	10.0	665937.000	66590

KEMRON FORMS - Modified 10/13/2006
Version 1.6 PDF File ID: 657510
Report generated 12/27/2006 11:31

KEMRON Environmental Services

INITIAL CALIBRATION DATA

00096004

Login Number: L0612485 **Instrument ID:** HP16

Analytical Method: RSK175 **Initial Calibration Date:** 27-SEP-06 15:29

Column ID: F

Analyte	WG223500-04			WG223500-05			WG223500-06		
	CONC	RESP	RF	CONC	RESP	RF	CONC	RESP	RF
ethane	20.0	2581706.00	129100	50.0	6486536.00	129700	100	13114659.0	131100
ethene	20.0	2544143.00	127200	50.0	6441905.00	128800	100	12874408.0	128700
methane	20.0	1376031.00	68800	50.0	3424931.00	68500	100	6927945.00	69280

KEMRON FORMS - Modified 10/13/2006
Version 1.6 PDF File ID: 657510
Report generated 12/27/2006 11:31

KEMRON Environmental Services

INITIAL CALIBRATION DATA

00096005

Login Number: L0612485
Analytical Method: RSK175

Instrument ID: HP16
Initial Calibration Date: 27-SEP-06 15:29
Column ID: F

Analyte	WG223500-07			WG223500-08		
	CONC	RESP	RF	CONC	RESP	RF
ethane	200	27423411.0	137100	300	41100017.0	137000
ethene	200	27055714.0	135300	300	40485879.0	135000
methane	200	14533928.0	72670	300	21776507.0	72590

KEMRON FORMS - Modified 10/13/2006
Version 1.6 PDF File ID: 657510
Report generated 12/27/2006 11:31

KEMRON Environmental Services

ALTERNATE SOURCE CALIBRATION REPORT

00096006

Login Number: L0612485 Run Date: 09/27/2006 Sample ID: WG223500-09

Instrument ID: HP16 Run Time: 15:43 Method: RSK175

File ID: 16G4204 Analyst: JLS

ICal Workgroup: WG223500 Cal ID: HP16 - 27-SEP-06

Analyte		Expected	Found	Units	RF	%D	UCL	Q
methane		85.6	77.3	ug/L	65300	9.70	30	
ethene		150	135	ug/L	122000	9.60	30	
ethane		160	145	ug/L	123000	9.70	30	

* Exceeds %D Limit

KEMRON FORMS - Modified 11/21/2006
Version 1.5 PDF File ID: 657511
Report generated 12/27/2006 11:05

KEMRON Environmental Services

CONTINUING CALIBRATION VERIFICATION (CCV)

00096007

Login Number: L0612485 Run Date: 12/20/2006 Sample ID: WG230007-01
Instrument ID: HP16 Run Time: 11:27 Method: RSK175
File ID: 16G5670 Analyst: JLS
Workgroup (AAB#): WG230008 Cal ID: HP16 - 27-SEP-06

Analyte		Expected	Found	UNITS	RF	%D	UCL	Q
methane		85.6	82.2	ug/L	69400	4.00	25	
ethene		150	144	ug/L	129000	3.90	25	
ethane		160	156	ug/L	132000	3.10	25	

* Exceeds %D Criteria

KEMRON FORMS - Modified 12/11/2006
Version 1.3 PDF File ID: 657512
Report generated 12/27/2006 11:31

KEMRON Environmental Services

CONTINUING CALIBRATION VERIFICATION (CCV)

00096008

Login Number: L0612485 Run Date: 12/20/2006 Sample ID: WG230007-02
Instrument ID: HP16 Run Time: 15:08 Method: RSK175
File ID: 16G5678 Analyst: JLS
Workgroup (AAB#): WG230008 Cal ID: HP16 - 27-SEP-06

Analyte		Expected	Found	UNITS	RF	%D	UCL	Q
methane		85.6	88.0	ug/L	74300	2.80	25	
ethene		150	157	ug/L	141000	4.80	25	
ethane		160	167	ug/L	142000	4.20	25	

* Exceeds %D Criteria

KEMRON FORMS - Modified 12/11/2006
Version 1.3 PDF File ID: 657512
Report generated 12/27/2006 11:31

KEMRON Environmental Services

CONTINUING CALIBRATION VERIFICATION (CCV)

00096009

Login Number: L0612485 Run Date: 12/20/2006 Sample ID: WG230007-03
Instrument ID: HP16 Run Time: 18:32 Method: RSK175
File ID: 16G5689 Analyst: JLS
Workgroup (AAB#): WG230008 Cal ID: HP16 - 27-SEP-06

Analyte		Expected	Found	UNITS	RF	%D	UCL	Q
methane		85.6	78.6	ug/L	66400	8.20	25	
ethene		150	137	ug/L	123000	8.30	25	
ethane		160	147	ug/L	125000	8.20	25	

* Exceeds %D Criteria

KEMRON FORMS - Modified 12/11/2006
Version 1.3 PDF File ID: 657512
Report generated 12/27/2006 11:31

KEMRON Environmental Services

CONTINUING CALIBRATION VERIFICATION (CCV)

00096010

Login Number: L0612485 Run Date: 12/20/2006 Sample ID: WG230007-04
Instrument ID: HP16 Run Time: 19:28 Method: RSK175
File ID: 16G5693 Analyst: JLS
Workgroup (AAB#): WG230008 Cal ID: HP16 - 27-SEP-06

Analyte		Expected	Found	UNITS	RF	%D	UCL	Q
methane		85.6	80.7	ug/L	68100	5.80	25	
ethene		150	138	ug/L	124000	7.70	25	
ethane		160	149	ug/L	126000	7.30	25	

* Exceeds %D Criteria

KEMRON FORMS - Modified 12/11/2006
Version 1.3 PDF File ID: 657512
Report generated 12/27/2006 11:31

KEMRON Environmental Services

CONTINUING CALIBRATION VERIFICATION (CCV)

00096011

Login Number: L0612485 Run Date: 12/21/2006 Sample ID: WG230009-01
Instrument ID: HP16 Run Time: 09:04 Method: RSK175
File ID: 16G5694 Analyst: JLS
Workgroup (AAB#): WG230108 Cal ID: HP16 - 27-SEP-06

Analyte		Expected	Found	UNITS	RF	%D	UCL	Q
methane		85.6	81.5	ug/L	68800	4.80	25	
ethene		150	145	ug/L	130000	3.30	25	
ethane		160	155	ug/L	132000	3.60	25	

* Exceeds %D Criteria

KEMRON FORMS - Modified 12/11/2006
Version 1.3 PDF File ID: 657512
Report generated 12/27/2006 11:31

KEMRON Environmental Services

CONTINUING CALIBRATION VERIFICATION (CCV)

00096012

Login Number: L0612485 Run Date: 12/21/2006 Sample ID: WG230009-02
Instrument ID: HP16 Run Time: 14:04 Method: RSK175
File ID: 16G5705 Analyst: JLS
Workgroup (AAB#): WG230108 Cal ID: HP16 - 27-SEP-06

Analyte		Expected	Found	UNITS	RF	%D	UCL	Q
methane		85.6	72.9	ug/L	61500	14.9	25	
ethene		150	126	ug/L	114000	15.6	25	
ethane		160	137	ug/L	117000	14.4	25	

* Exceeds %D Criteria

KEMRON FORMS - Modified 12/11/2006
Version 1.3 PDF File ID: 657512
Report generated 12/27/2006 11:31

KEMRON Environmental Services

CONTINUING CALIBRATION VERIFICATION (CCV)

00096013

Login Number: L0612485 Run Date: 12/21/2006 Sample ID: WG230009-03
Instrument ID: HP16 Run Time: 16:38 Method: RSK175
File ID: 16G5716 Analyst: JLS
Workgroup (AAB#): WG230108 Cal ID: HP16 - 27-SEP-06

Analyte		Expected	Found	UNITS	RF	%D	UCL	Q
methane		85.6	76.3	ug/L	64400	10.9	25	
ethene		150	132	ug/L	119000	11.6	25	
ethane		160	143	ug/L	121000	11.1	25	

* Exceeds %D Criteria

KEMRON FORMS - Modified 12/11/2006
Version 1.3 PDF File ID: 657512
Report generated 12/27/2006 11:31

KEMRON Environmental Services

CONTINUING CALIBRATION VERIFICATION (CCV)

00096014

Login Number: L0612485 Run Date: 12/21/2006 Sample ID: WG230009-04
Instrument ID: HP16 Run Time: 17:35 Method: RSK175
File ID: 16G5720 Analyst: JLS
Workgroup (AAB#): WG230108 Cal ID: HP16 - 27-SEP-06

Analyte		Expected	Found	UNITS	RF	%D	UCL	Q
methane		85.6	69.6	ug/L	58700	18.8	25	
ethene		150	120	ug/L	107000	20.2	25	
ethane		160	129	ug/L	110000	19.7	25	

* Exceeds %D Criteria

KEMRON FORMS - Modified 12/11/2006
Version 1.3 PDF File ID: 657512
Report generated 12/27/2006 11:31

Inorganic QA/QC

00096016

KEMRON Environmental Services
Data Checklist

Date: 08-DEC-2006
Analyst: JWR
Analyst: NA
Method: 300/9056
Instrument: IC2
Curve Workgroup: WG229106
Runlog ID: 13746
Analytical Workgroups:

System Performance Check	
Eluent check	
Initial Calibration	X
Average RF	
Linear Reg or Higher Order Curve	12/08/06
Alt Source Check	12/08/06
Continuing Calibration	
Continuing Calibration	
Client Specific Requirements	
Blanks	
Quant Report / Chromatogram	
Spike Compounds	
MS/MSD	
Excel Spreadsheet	
Samples	
TCL Hits	
Manual Integrations	X
Data Package	
Level 2	
Level 3	
Level 4	
Primary Reviewer	JWR
Secondary Reviewer	MDC
Check for compliance with method and project specific requirements	X
Check the completeness of reported information	X
Check the information for the report narrative	X
Check the resonableness of the results	X
Comments:	
Ran Curve and Alternate Source only for DX-320.	

Primary Reviewer:
13-DEC-2006
John Richards

Secondary Reviewer:
14-DEC-2006
Michael Cochran

Generated: DEC-14-2006 20:13:47

00096017

KEMRON Environmental Services
Data Checklist

Date: 20-DEC-2006
Analyst: JWR
Analyst: NA
Method: 300
Instrument: IC2
Curve Workgroup: WG229106
Runlog ID: 13984
Analytical Workgroups: WG230107

System Performance Check	
Eluent check	X
Initial Calibration	
Average RF	
Linear Reg or Higher Order Curve	12/08/06
Alt Source Check	12/08/06
Continuing Calibration	
Continuing Calibration	X
Client Specific Requirements	X
Blanks	
Quant Report / Chromatogram	X
Spike Compounds	X
MS/MSD	X
Excel Spreadsheet	X
Samples	
TCL Hits	X
Manual Integrations	X
Data Package	
Level 2	
Level 3	L0612485
Level 4	
Primary Reviewer	JWR
Secondary Reviewer	MDC
Check for compliance with method and project specific requirements	X
Check the completeness of reported information	X
Check the information for the report narrative	X
Check the resonableness of the results	X
Comments: L0612485	LAB DUE 12/29/06
Samples L0612485-01, 03, 04, 05, 06 were analyzed for NO2 & NO3 at a dilution	
due to the levels of Cl and SO4 in them. The Cl levels are too high in order to	
analyze these samples undiluted for NO2. Cl peaks of this magnitude in size	
"cover up" any NO2 peak near its RL. These samples were analyzed at a dilution	
for NO3 due to the total level of Cl and SO4 in them. The analytical column has a	
tolerance of 200 ppm for a single anion and 400 ppm for all anions before the	
column becomes overloaded.	
The MS/MSD associated with this analytical batch had % Rec's for Cl below the	
advisory limit. The parent sample chosen for the MS/MSD had a Cl result greater	
than the calibration range.	

Primary Reviewer:
29-DEC-2006
John Richards

Secondary Reviewer:
29-DEC-2006
Michael Cohen

Generated: DEC-29-2006 15:19:37

KEMRON Environmental Services
HOLDING TIMES
EQUIVALENT TO AFCEE FORM 9

00096018

Analytical Method: 300.0 AAB#: WG230107

Login Number: L0612485

Client ID	Date Collected	Date Received	Date Extracted	Max Hold Time Ext.	Time Held Ext.	Date Analyzed	Max Hold Time Anal	Time Held Anal.	Q
12WW05	12/19/06	12/20/06	12/20/06	2	1.25	12/20/06	2	1.25	
12WW24-QC	12/19/06	12/20/06	12/20/06	2	1.28	12/20/06	2	1.28	
12WW20	12/19/06	12/20/06	12/20/06	2	1.12	12/20/06	2	1.12	
12WW20	12/19/06	12/20/06	12/20/06	2	1.27	12/20/06	2	1.27	
12WW05	12/19/06	12/20/06	12/20/06	2	1.46	12/20/06	2	1.46	
12WW01	12/19/06	12/20/06	12/20/06	2	1.05	12/20/06	2	1.05	
12WW20	12/19/06	12/20/06	12/20/06	2	1.29	12/20/06	2	1.29	
12WW01	12/19/06	12/20/06	12/20/06	2	1.06	12/20/06	2	1.06	
12WW24	12/19/06	12/20/06	12/20/06	2	1.04	12/20/06	2	1.04	
12WW24	12/19/06	12/20/06	12/20/06	2	1.22	12/20/06	2	1.22	
12WW24	12/19/06	12/20/06	12/20/06	2	1.21	12/20/06	2	1.21	
12WW24-QC	12/19/06	12/20/06	12/20/06	2	1.29	12/20/06	2	1.29	
12WW05	12/19/06	12/20/06	12/20/06	2	1.47	12/20/06	2	1.47	
12WW24-QC	12/19/06	12/20/06	12/20/06	2	1.06	12/20/06	2	1.06	
12WW01	12/19/06	12/20/06	12/20/06	2	0.974	12/20/06	2	0.974	
12WW02	12/19/06	12/20/06	12/20/06	2	1.32	12/20/06	2	1.32	
12WW02	12/19/06	12/20/06	12/20/06	2	1.27	12/20/06	2	1.27	

* EXT = SEE PROJECT QAPP REQUIREMENTS
*ANAL = SEE PROJECT QAPP REQUIREMENTS

KEMRON FORMS - Modified 11/20/2006
Version 1.5 PDF File ID: 660620
Report generated 12/29/2006 11:16

KEMRON Environmental Services

METHOD BLANK SUMMARY

00096019

Login Number: L0612485
Blank File ID: I2122006.13
Prep Date: 12/20/06 13:03
Analyzed Date: 12/20/06 13:03
Analyst: JWR

Work Group: WG230107
Blank Sample ID: WG230107-01
Instrument ID: IC2
Method: 300.0

This Method Blank Applies To The Following Samples:

Client ID	Lab Sample ID	Lab File ID	Time Analyzed	TAG
LCS	WG230107-02	I2122006.14	12/20/06 13:21	01
12WW01	L0612485-01	I2122006.15	12/20/06 13:38	DL01
12WW20	L0612485-03	I2122006.17	12/20/06 14:13	DL01
12WW24	L0612485-04	I2122006.18	12/20/06 14:30	DL01
12WW05	L0612485-05	I2122006.19	12/20/06 14:48	DL01
12WW24-QC	L0612485-06	I2122006.20	12/20/06 15:05	DL01
12WW01	L0612485-01	I2122006.21	12/20/06 15:22	DL02
12WW01	L0612485-01	I2122006.22	12/20/06 15:40	DL03
12WW02	L0612485-02	I2122006.25	12/20/06 16:32	01
DUP	WG230107-04	I2122006.26	12/20/06 16:49	01
12WW02	L0612485-02	I2122006.29	12/20/06 17:42	DL01
12WW20	L0612485-03	I2122006.30	12/20/06 17:59	DL02
12WW20	L0612485-03	I2122006.31	12/20/06 18:16	DL03
12WW24	L0612485-04	I2122006.32	12/20/06 18:34	DL02
12WW24	L0612485-04	I2122006.33	12/20/06 18:51	DL03
12WW05	L0612485-05	I2122006.36	12/20/06 19:43	DL02
12WW05	L0612485-05	I2122006.37	12/20/06 20:01	DL03
12WW24-QC	L0612485-06	I2122006.38	12/20/06 20:18	DL02
12WW24-QC	L0612485-06	I2122006.39	12/20/06 20:36	DL03

KEMRON Environmental Services

METHOD BLANK REPORT

00096020

Login Number: L0612485 Prep Date: 12/20/06 13:03 Sample ID: WG230107-01
Instrument ID: IC2 Run Date: 12/20/06 13:03 Prep Method: 300.0
File ID: I2122006.13 Analyst: JWR Method: 300.0
Workgroup (AAB#): WG230107 Matrix: Water Units: mg/L
Contract #: DACA56-94-D-0020 Cal ID: IC2-08-DEC-06

Analytes	SQL	PQL	Concentration	Dilution	Qualifier
Chloride	0.100	0.200	0.100	1	U
Nitrate	0.100	0.600	0.100	1	U
Nitrite	0.100	0.400	0.100	1	U
Sulfate	0.500	1.00	0.500	1	U

MDL Method Detection Limit
RL Reporting/quantitation Limit

* Analyte concentration > RL

KEMRON FORMS - Modified 12/07/2006
Version 1.5 PDF File ID: 660622
Report generated 12/29/2006 11:16

KEMRON Environmental Services

LABORATORY CONTROL SAMPLE (LCS)

00096021

Login Number: L0612485 Run Date: 12/20/2006 Sample ID: WG230107-02
Instrument ID: IC2 Run Time: 13:21 Prep Method: 300.0
File ID: I2122006.14 Analyst: JWR Method: 300.0
Workgroup (AAB#): WG230107 Matrix: Water Units: mg/L
Contract #: DACA56-94-D-0020 Cal ID: IC2-08-DEC-06

Analytes	Expected	Found	% Rec	LCS Limits	Q
Chloride	6.00	5.90	98.3	90 - 110	
Nitrate	4.07	4.10	101	90 - 110	
Nitrite	3.65	3.71	101	90 - 110	
Sulfate	30.0	30.6	102	90 - 110	

KEMRON FORMS - Modified 12/15/2006
Version 1.5 PDF File ID: 660623
Report generated 12/29/2006 11:16

DUPLICATE (DUP)

00096022

Sample Ref: L0612485-02 Cal ID: IC2- Worknum: WG230107
Instrument ID: IC2 Method: 9056
Sample ID: WG230107-03 File ID: I2122006.25 Dil: 1 Matrix: WATER
Duplicate ID: WG230107-04 File ID: I2122006.26 Dil: 1 Units: mg/L

Analyte	Sample	Duplicate	RPD	RPD Limit	Q
Chloride	116	115	0.772	20	
Nitrate	ND	ND	0	20	
Nitrite	ND	ND	0	20	
Sulfate	46.9	47.5	1.35	20	

FAILS RPD LIMIT

NOTE: This is an internal quality control sample.

KEMRON FORMS - Modified 03/06/2006
Version 1.5 PDF File ID: 660625
Report generated 12/29/2006 11:16

KEMRON Environmental Services

MATRIX SPIKE AND MATRIX SPIKE DUP (MS/MSD)

00096023

Loginnum:L0612485 Cal ID:IC2- Worknum:WG230107
Instrument ID:IC2 Contract #:DACA56-94-D-0020 Method:300.0
Parent ID:WG230107-03 File ID:I2122006.25 Dil:1 Matrix:WATER
Sample ID:WG230107-05 MS File ID:I2122006.27 Dil:1 Units:mg/L
Sample ID:WG230107-06 MSD File ID:I2122006.28 Dil:1

Analyte	Parent	MS Spiked	MS Found	MS %Rec	MSD Spiked	MSD Found	MSD %Rec	%RPD	%Rec Limits	RPD Limit	Q
Chloride	116	6.00	115	-26.2	6.00	114	-28.3	0.111	90 - 110	20	*
Nitrate	ND	4.07	4.25	105	4.07	4.26	105	0.141	90 - 110	20	
Nitrite	ND	3.65	3.56	97.5	3.65	3.53	96.6	0.902	90 - 110	20	
Sulfate	46.9	30.0	74.3	91.3	30.0	73.9	90.0	0.497	90 - 110	20	

* FAILS %REC LIMIT

FAILS RPD LIMIT

NOTE: This is an internal quality control sample.

KEMRON FORMS - Modified 12/08/2006
Version 1.5 PDF File ID: 660624
Report generated 12/29/2006 11:16

KEMRON Environmental Services

CONTINUING CALIBRATION BLANK (CCB)

00096024

Login Number: L0612485 Run Date: 12/20/2006 Sample ID: WG230109-02
Instrument ID: IC2 Run Time: 12:46 Method: 300.0
File ID: I2122006.12 Analyst: JWR Units: mg/L
Workgroup (AAB#): WG230107 Cal ID: IC2 - 08-DEC-06

Analytes	MDL	RDL	Concentration	Dilution	Qualifier
Cl	0.100	0.200	0		U
NO3-N	0.100	0.600	0		U
NO2-N	0.100	0.400	0		U
SO4	0.500	1.00	0		U

U = Result is less than MDL
F = Result is between MDL and RL
* = Result is above RL

KEMRON FORMS - Modified 09/27/2006
Version 2.0 PDF File ID: 660627
Report generated 12/29/2006 11:17

KEMRON Environmental Services

CONTINUING CALIBRATION BLANK (CCB)

00096025

Login Number: L0612485 Run Date: 12/20/2006 Sample ID: WG230109-04
Instrument ID: IC2 Run Time: 16:15 Method: 300.0
File ID: I2122006.24 Analyst: JWR Units: mg/L
Workgroup (AAB#): WG230107 Cal ID: IC2 - 08-DEC-06

Analytes	MDL	RDL	Concentration	Dilution	Qualifier
Cl	0.100	0.200	0		U
NO3-N	0.100	0.600	0		U
NO2-N	0.100	0.400	0		U
SO4	0.500	1.00	0		U

U = Result is less than MDL
F = Result is between MDL and RL
* = Result is above RL

KEMRON FORMS - Modified 09/27/2006
Version 2.0 PDF File ID: 660627
Report generated 12/29/2006 11:17

KEMRON Environmental Services

CONTINUING CALIBRATION BLANK (CCB)

00096026

Login Number: L0612485 Run Date: 12/20/2006 Sample ID: WG230109-06
Instrument ID: IC2 Run Time: 19:26 Method: 300.0
File ID: I2122006.35 Analyst: JWR Units: mg/L
Workgroup (AAB#): WG230107 Cal ID: IC2 - 08-DEC-06

Analytes	MDL	RDL	Concentration	Dilution	Qualifier
Cl	0.100	0.200	0		U
NO3-N	0.100	0.600	0		U
NO2-N	0.100	0.400	0		U
SO4	0.500	1.00	0		U

U = Result is less than MDL
F = Result is between MDL and RL
* = Result is above RL

KEMRON FORMS - Modified 09/27/2006
Version 2.0 PDF File ID: 660627
Report generated 12/29/2006 11:17

KEMRON Environmental Services

CONTINUING CALIBRATION BLANK (CCB)

00096027

Login Number: L0612485 Run Date: 12/20/2006 Sample ID: WG230109-08
Instrument ID: IC2 Run Time: 21:10 Method: 300.0
File ID: I2122006.41 Analyst: JWR Units: mg/L
Workgroup (AAB#): WG230107 Cal ID: IC2 - 08-DEC-06

Analytes	MDL	RDL	Concentration	Dilution	Qualifier
Cl	0.100	0.200	0		U
NO3-N	0.100	0.600	0		U
NO2-N	0.100	0.400	0		U
SO4	0.500	1.00	0		U

U = Result is less than MDL
F = Result is between MDL and RL
* = Result is above RL

KEMRON FORMS - Modified 09/27/2006
Version 2.0 PDF File ID: 660627
Report generated 12/29/2006 11:17

KEMRON Environmental Services

CONTINUING CALIBRATION VERIFICATION (CCV)

00096028

Login Number: L0612485 Run Date: 12/20/2006 Sample ID: WG230109-01
Instrument ID: IC2 Run Time: 12:28 Method: 300.0
File ID: I2122006.11 Analyst: JWR
Workgroup (AAB#): WG230107 Cal ID: IC2 - 08-DEC-06

Analyte		Expected	Found	UNITS	RF	%D	UCL	Q
Chloride		6.00	6.02	mg/L	8.01	0.300	15	
Nitrate		4.07	4.11	mg/L	3.31	1.10	15	
Nitrite		3.65	3.78	mg/L	3.68	3.50	15	
Sulfate		30.0	30.6	mg/L	10.3	1.90	15	

* Exceeds %D Criteria

KEMRON FORMS - Modified 12/11/2006
Version 1.3 PDF File ID: 660626
Report generated 12/29/2006 11:17

KEMRON Environmental Services

CONTINUING CALIBRATION VERIFICATION (CCV)

00096029

Login Number: L0612485 Run Date: 12/20/2006 Sample ID: WG230109-03
Instrument ID: IC2 Run Time: 15:57 Method: 300.0
File ID: I2122006.23 Analyst: JWR
Workgroup (AAB#): WG230107 Cal ID: IC2 - 08-DEC-06

Analyte		Expected	Found	UNITS	RF	%D	UCL	Q
Chloride		6.00	6.07	mg/L	7.94	1.10	15	
Nitrate		4.07	4.16	mg/L	3.26	2.40	15	
Nitrite		3.65	3.78	mg/L	3.68	3.60	15	
Sulfate		30.0	30.6	mg/L	10.3	2.00	15	

* Exceeds %D Criteria

KEMRON FORMS - Modified 12/11/2006
Version 1.3 PDF File ID: 660626
Report generated 12/29/2006 11:17

KEMRON Environmental Services

CONTINUING CALIBRATION VERIFICATION (CCV)

00096030

Login Number: L0612485 Run Date: 12/20/2006 Sample ID: WG230109-05
Instrument ID: IC2 Run Time: 19:09 Method: 300.0
File ID: I2122006.34 Analyst: JWR
Workgroup (AAB#): WG230107 Cal ID: IC2 - 08-DEC-06

Analyte		Expected	Found	UNITS	RF	%D	UCL	Q
Chloride		6.00	6.24	mg/L	7.70	4.00	15	
Nitrate		4.07	4.11	mg/L	3.31	1.10	15	
Nitrite		3.65	3.74	mg/L	3.72	2.40	15	
Sulfate		30.0	30.7	mg/L	10.3	2.40	15	

* Exceeds %D Criteria

KEMRON FORMS - Modified 12/11/2006
Version 1.3 PDF File ID: 660626
Report generated 12/29/2006 11:17

KEMRON Environmental Services

CONTINUING CALIBRATION VERIFICATION (CCV)

00096031

Login Number: L0612485 Run Date: 12/20/2006 Sample ID: WG230109-07
Instrument ID: IC2 Run Time: 20:53 Method: 300.0
File ID: I2122006.40 Analyst: JWR
Workgroup (AAB#): WG230107 Cal ID: IC2 - 08-DEC-06

Analyte		Expected	Found	UNITS	RF	%D	UCL	Q
Chloride		6.00	6.22	mg/L	7.74	3.60	15	
Nitrate		4.07	4.19	mg/L	3.24	3.00	15	
Nitrite		3.65	3.78	mg/L	3.68	3.60	15	
Sulfate		30.0	30.9	mg/L	10.2	2.90	15	

* Exceeds %D Criteria

KEMRON FORMS - Modified 12/11/2006
Version 1.3 PDF File ID: 660626
Report generated 12/29/2006 11:17

KEMRON Environmental Services
Data Checklist

00096032

Date: 26-DEC-2006
Analyst: DIH
Analyst: NA
Method: TOC
Instrument: TOC
Curve Workgroup: NA
Runlog ID:
Analytical Workgroups: WG230207 WG230208

Calibration/Linearity	1/12/06
Second Source Check	X
ICV/CCV (std)	X
ICB/CCB	X
Blank	X
LCS/LCS Dup	X
MS/MSD	X
Duplicate	X
Upload Results	X
Client Forms	X
QC Violation Sheet	
Case Narratives	X
Signed Raw Data	X
STD/LCS on benchsheet	X
Check for compliance with method and project specific requirements	X
Check the completeness of reported information	X
Check the information for the report narrative	X
Primary Reviewer	DIH
Secondary Reviewer	
Comments	

Primary Reviewer:
28-DEC-2006

Secondary Reviewer:

Generated: DEC-28-2006 16:23:51

KEMRON Environmental Services
Data Checklist

00096033

Date: 27-DEC-2006
Analyst: DIH
Analyst: NA
Method: TOC
Instrument: TOC
Curve Workgroup: NA
Runlog ID:
Analytical Workgroups: WG230345 WG230346

Calibration/Linearity	1/12/06
Second Source Check	X
ICV/CCV (std)	X
ICB/CCB	X
Blank	X
LCS/LCS Dup	X
MS/MSD	X
Duplicate	X
Upload Results	X
Client Forms	X
QC Violation Sheet	
Case Narratives	X
Signed Raw Data	X
STD/LCS on benchsheet	X
Check for compliance with method and project specific requirements	X
Check the completeness of reported information	X
Check the information for the report narrative	X
Primary Reviewer	DIH
Secondary Reviewer	
Comments	

Primary Reviewer:
28-DEC-2006

Secondary Reviewer:

Generated: DEC-28-2006 16:22:54

KEMRON Environmental Services
HOLDING TIMES
EQUIVALENT TO AFCEE FORM 9

00096034

Analytical Method: 415.1 AAB#: WG230208
Login Number: L0612485

Client ID	Date Collected	Date Received	Date Extracted	Max Hold Time Ext.	Time Held Ext.	Date Analyzed	Max Hold Time Anal	Time Held Anal.	Q
12WW05	12/19/06	12/20/06	12/27/06	28	7.64	12/27/06	28	7.64	
12WW01	12/19/06	12/20/06	12/26/06	28	7.35	12/26/06	28	7.35	
12WW20	12/19/06	12/20/06	12/26/06	28	7.49	12/26/06	28	7.49	

* EXT = SEE PROJECT QAPP REQUIREMENTS
*ANAL = SEE PROJECT QAPP REQUIREMENTS

KEMRON FORMS - Modified 11/20/2006
Version 1.5 PDF File ID: 659704
Report generated 12/28/2006 15:00

KEMRON Environmental Services
HOLDING TIMES
EQUIVALENT TO AFCEE FORM 9

00096035

Analytical Method: 415.1 AAB#: WG230345
Login Number: L0612485

Client ID	Date Collected	Date Received	Date Extracted	Max Hold Time Ext.	Time Held Ext.	Date Analyzed	Max Hold Time Anal	Time Held Anal.	Q
12WW02	12/19/06	12/20/06	12/27/06	28	8.11	12/27/06	28	8.11	
12WW24-QC	12/19/06	12/20/06	12/27/06	28	7.98	12/27/06	28	7.98	
12WW24	12/19/06	12/20/06	12/27/06	28	7.97	12/27/06	28	7.97	

* EXT = SEE PROJECT QAPP REQUIREMENTS
*ANAL = SEE PROJECT QAPP REQUIREMENTS

KEMRON FORMS - Modified 11/20/2006
Version 1.5 PDF File ID: 659704
Report generated 12/28/2006 15:00

KEMRON Environmental Services

METHOD BLANK SUMMARY

00096036

Login Number: L0612485
Work Group: WG230208
Blank File ID: TC12-26-2006.33
Blank Sample ID: WG230208-01
Prep Date: 12/26/06 21:53
Instrument ID: TOC-VWP
Analyzed Date: 12/26/06 21:53
Method: 415.1
Analyst: DIH

This Method Blank Applies To The Following Samples:

Client ID	Lab Sample ID	Lab File ID	Time Analyzed	TAG
LCS	WG230208-02	TC12-26-2006.34	12/26/06 22:06	01
LCS2	WG230208-03	TC12-26-2006.35	12/26/06 22:18	01
12WW01	L0612485-01	TC12-26-2006.36	12/26/06 22:34	01
12WW01	L0612485-01	TC12-26-2006.36	12/26/06 22:34	01
12WW20	L0612485-03	TC12-26-2006.38	12/26/06 23:07	01
12WW20	L0612485-03	TC12-26-2006.38	12/26/06 23:07	01
12WW05	L0612485-05	TC12-26-2006.42	12/27/06 00:02	01
12WW05	L0612485-05	TC12-26-2006.42	12/27/06 00:02	01
DUP	WG230208-05	TC12-26-2006.54	12/27/06 02:43	01

KEMRON FORMS - Modified 12/07/2006
Version 1.5 PDF File ID: 659705
Report generated 12/28/2006 15:00

METHOD BLANK SUMMARY

00096037

Login Number: L0612485
Work Group: WG230345
Blank File ID: TC12-27-2006.04
Blank Sample ID: WG230345-01
Prep Date: 12/27/06 11:59
Instrument ID: TOC-VWP
Analyzed Date: 12/27/06 11:59
Method: 415.1
Analyst: DIH

This Method Blank Applies To The Following Samples:

Client ID	Lab Sample ID	Lab File ID	Time Analyzed	TAG
LCS	WG230345-02	TC12-27-2006.05	12/27/06 12:12	01
LCS2	WG230345-03	TC12-27-2006.06	12/27/06 12:25	01
12WW02	L0612485-02	TC12-27-2006.07	12/27/06 12:39	DL01
12WW02	L0612485-02	TC12-27-2006.07	12/27/06 12:39	DL01
12WW24	L0612485-04	TC12-27-2006.08	12/27/06 12:55	DL01
12WW24	L0612485-04	TC12-27-2006.08	12/27/06 12:55	DL01
12WW24-QC	L0612485-06	TC12-27-2006.09	12/27/06 13:10	DL01
12WW24-QC	L0612485-06	TC12-27-2006.09	12/27/06 13:10	DL01
DUP	WG230345-05	TC12-27-2006.31	12/27/06 18:26	01

KEMRON FORMS - Modified 12/07/2006
Version 1.5 PDF File ID: 659705
Report generated 12/28/2006 15:00

KEMRON Environmental Services

METHOD BLANK REPORT

00096038

Login Number: L0612485 Prep Date: 12/26/06 21:53 Sample ID: WG230208-01
Instrument ID: TOC-VWP Run Date: 12/26/06 21:53 Prep Method: 415.1
File ID: TC12-26-2006.33 Analyst: DIH Method: 415.1
Workgroup (AAB#): WG230208 Matrix: Water Units: mg/L
Contract #: DACA56-94-D-0020 Cal ID: TOC-VW-12-JAN-06

Analytes	SQL	PQL	Concentration	Dilution	Qualifier
Total Organic Carbon	0.500	1.00	0.500	1	U

MDL Method Detection Limit
RL Reporting/quantitation Limit

* Analyte concentration > RL

KEMRON FORMS - Modified 12/07/2006
Version 1.5 PDF File ID: 659706
Report generated 12/28/2006 15:00

KEMRON Environmental Services

METHOD BLANK REPORT

00096039

Login Number: L0612485 Prep Date: 12/27/06 11:59 Sample ID: WG230345-01
Instrument ID: TOC-VWP Run Date: 12/27/06 11:59 Prep Method: 415.1
File ID: TC12-27-2006.04 Analyst: DIH Method: 415.1
Workgroup (AAB#): WG230345 Matrix: Water Units: mg/L
Contract #: DACA56-94-D-0020 Cal ID: TOC-VW-12-JAN-06

Analytes	SQL	PQL	Concentration	Dilution	Qualifier
Total Organic Carbon	0.500	1.00	0.500	1	U

MDL Method Detection Limit
RL Reporting/quantitation Limit

* Analyte concentration > RL

KEMRON FORMS - Modified 12/07/2006
Version 1.5 PDF File ID: 659706
Report generated 12/28/2006 15:00

KEMRON Environmental Services

LABORATORY CONTROL SAMPLE (LCS)

00096040

Login Number: L0612485 Analyst: DIH Prep Method: 415.1
Instrument ID: TOC-VWP Matrix: Water Method: 415.1
Workgroup (AAB#): WG230208 Units: mg/L
Sample ID: WG230208-02 LCS File ID: TC12-26-2006.34 Run Date: 12/26/2006 22:06
Sample ID: WG230208-03 LCS2 File ID: TC12-26-2006.35 Run Date: 12/26/2006 22:18

Analytes	LCS			LCS2			%RPD	%Rec Limits	RPD Lmt	Q
	Known	Found	% REC	Known	Found	% REC				
Total Organic Carbon	25.0	25.5	102	25.0	25.3	101	0.786	85 - 115	15	

KEMRON FORMS - Modified 07/13/2006
Version 1.5 PDF File ID: 659707
Report generated 12/28/2006 15:00

KEMRON Environmental Services

LABORATORY CONTROL SAMPLE (LCS)

00096041

Login Number: L0612485 Analyst: DIH Prep Method: 415.1
Instrument ID: TOC-VWP Matrix: Water Method: 415.1
Workgroup (AAB#): WG230345 Units: mg/L
Sample ID: WG230345-02 LCS File ID: TC12-27-2006.05 Run Date: 12/27/2006 12:12
Sample ID: WG230345-03 LCS2 File ID: TC12-27-2006.06 Run Date: 12/27/2006 12:25

Analytes	LCS			LCS2			%RPD	%Rec Limits	RPD Lmt	Q
	Known	Found	% REC	Known	Found	% REC				
Total Organic Carbon	25.0	24.7	98.6	25.0	25.4	101	2.80	85 - 115	15	

KEMRON FORMS - Modified 07/13/2006
Version 1.5 PDF File ID: 659707
Report generated 12/28/2006 15:00

00096042

B2705

Shaw® Shaw Environmental, Inc.

3010 Briarpark Drive, Suite 4N
Houston, TX 77042 (713) 996-4400

CHAIN-OF-CUSTODY

No. 10485

Laboratory Name: Kemron

Address: 156 Starlite Drive Marietta, Ohio 45750

Contact: Stephanie Mossburg (740) 373-4071

Project Name: LHAAP

Project Location: Karnack, Tx

Project No.: 845714.0483901

Project Contact: Allen Willmore

Project Telephone No.: (713) 247-9292

Point of contact: Diane Meyer

Telephone No.: (713) 996-4408

Project Manager/Supervisor: Praveen Srivastav

Analysis and Method Desired (Indicate separate containers)

Item No.	Sample Number	Date	Time	Comp	Grab	Matrix	Sample Description, Location	Number of Containers	VOC 8260	D-Gases	TOC	Anions				Remarks
1	12WW01	12/19	1415		✓	W	12WW01	8	3	3	1	1				
2	12WW02	12/19	1005		✓	W	12WW02	8	3	3	1	1				
3	12WW20	12/19	1125		✓	W	12WW20	8	3	3	1	1				
4	~~12WW21~~	~~12/18~~	~~1515~~			~~W~~	~~12WW21~~	~~8~~	~~3~~	~~3~~	~~1~~	~~1~~				Same Not Sent
5	12WW24	12/19	1335		✓	W	12WW24	8	3	3	1	1				
6	12WW05	12/19	0845		✓	W	12WW05	8	3	3	1	1				
7	12WW24-QC	12/19	1335		✓	W	12WW24	8	3	3	1	1				
8	29WW40	12/19	1530		✓	W	29WW40	3	3							
9																
10																

Transfers Relinquished By (Signature)	Date/Time	Transfers Accepted By (Signature)	Date/Time
[signature]	1700 12-19-06	UPS	1700 12-19-06
		Laboratory: Brenda Gregory	12/20/06 @1100

Special Instructions: UPS

~~FedEx Airbill~~ No.: 1Z66V7250198794856

Sampler's Signature: [signature]

Clc Dated
Sp intact
Cooler Temp 2 bg

TAT: ____ Standard ____ Rush Due: ____

Seals Intact? ____ Y ____ N

Received Good Condition ____ Y ____ N ____ Cold

White - Lab Copy Canary - Field Copy Pink - File Copy

00096043

SAMPLE RECEIPT FORM

1100

Date: 12-20-06 Client: SHAW-TX

156 STARLITE DRIVE
MARIETTA, OH
45750
(740) 373-4071

Shipped By: ( ) Fed-Ex (✓) UPS ( )DHL ( ) KEMRON ( ) Client ( ) Other

Opened By: BLG

Logged By: BLG Login # L06 12485

IR Temp Gun: ( ) D (✓) G

COOLER INFORMATION

Number	Cooler ID	Temp °C	Airbill#	COC#	Other
1	1160	2	1266V7250198 7	94856	
2					
3					
4					
5					
6					

Were all coolers sealed?	(Y)	N	N/A
Were custody seals used on all coolers?	(Y)	N	N/A
Were custody seals intact?	(Y)	N	N/A
Was visible ice present?	(Y)	N	N/A
Were all coolers in the temperature range of 2-6C? (>6C*)	(Y)	N	N/A
Were the samples frozen?*	Y	(N)	N/A
Were COC papers provided?	(Y)	N	N/A
Were all sample containers intact?*	(Y)	N	N/A
Were all sample labels intact?	(Y)	N	N/A
Were all sample labels legible?*	(Y)	N	N/A
Did all sample labels match the COC?*	(Y)	N	N/A
Was the label information complete?*	(Y)	N	N/A
Were the correct containers used?*	(Y)	N	N/A
Were the correct preservatives added to water samples?*	(Y)	N	N/A
Was the pH tested on preserved water samples?	(Y)	N	N/A
Were pH ranges acceptable?*	(Y)	N	N/A
Was sufficient amount of sample provided?*	(Y)	N	N/A
Were bubbles present in VOA samples?*	Y	(N)	N/A
Were COC's signed and dated?	(Y)	N	N/A
Did samples arrive before hold time expired?*	(Y)	N	N/A
Are discrepancy forms attached?	Y	N	(N/A)

** Requires a discrepancy form*

CRF #1
Revised 8/22/03

Comments:_____

KEMRON Environmental Services
Internal Chain of Custody Report

00096044

Login: L0612485
Account: 2773
Project: 2773.025
Samples: 7
Due Date: 29-DEC-2006

Samplenum	Container ID	Products
L0612485-02	307590	826-SPE

Bottle: 1

Seq.	Purpose	From	To	Date/Time	Accept	Relinquish
1	LOGIN			20-DEC-2006 12:24	BRG	
2	ANALYZ	V1	ORG4	21-DEC-2006 11:54	FJB	JKT

Bottle: 2

Seq.	Purpose	From	To	Date/Time	Accept	Relinquish
1	LOGIN			20-DEC-2006 12:24	BRG	
2	ANALYZ	V1	ORG4	21-DEC-2006 11:54	FJB	JKT

Bottle: 3

Seq.	Purpose	From	To	Date/Time	Accept	Relinquish
1	LOGIN			20-DEC-2006 12:24	BRG	
2	ANALYZ	V1	ORG4	21-DEC-2006 11:54	FJB	JKT

Samplenum	Container ID	Products
L0612485-02	307591	RSK175

Bottle: 1

Seq.	Purpose	From	To	Date/Time	Accept	Relinquish
1	LOGIN			20-DEC-2006 12:24	BRG	
2	ANALYZ	V1	ORG4	20-DEC-2006 14:32	JLS	JS

Bottle: 2

Seq.	Purpose	From	To	Date/Time	Accept	Relinquish
1	LOGIN			20-DEC-2006 12:24	BRG	
2	ANALYZ	V1	ORG4	20-DEC-2006 14:32	JLS	JS

Bottle: 3

Seq.	Purpose	From	To	Date/Time	Accept	Relinquish
1	LOGIN			20-DEC-2006 12:24	BRG	
2	ANALYZ	V1	ORG4	20-DEC-2006 14:32	JLS	JS

Samplenum	Container ID	Products
L0612485-04	307600	TIC TOC

Bottle: 1

Seq.	Purpose	From	To	Date/Time	Accept	Relinquish
1	LOGIN			20-DEC-2006 12:24	BRG	
2	ANALYZ	W1	WET	26-DEC-2006 13:38	DIH	BRG
3	STORE	WET	A1	02-JAN-2007 07:47	JS	DIH

KEMRON Environmental Services
Internal Chain of Custody Report

00096045

Login: L0612485
Account: 2773
Project: 2773.025
Samples: 7
Due Date: 29-DEC-2006

Samplenum	Container ID	Products
L0612485-05	307601	300

Bottle: 1

Seq.	Purpose	From	To	Date/Time	Accept	Relinquish
1	LOGIN			20-DEC-2006 12:24	BRG	
2	ANALYZ	L1	WET	20-DEC-2006 12:29	DSF	BRG
3	STORE	WET	A1	21-DEC-2006 09:40	JKT	DSF

Samplenum	Container ID	Products
L0612485-03	307593	300

Bottle: 1

Seq.	Purpose	From	To	Date/Time	Accept	Relinquish
1	LOGIN			20-DEC-2006 12:24	BRG	
2	ANALYZ	L1	WET	20-DEC-2006 12:29	DSF	BRG
3	STORE	WET	A1	21-DEC-2006 09:40	JKT	DSF

Samplenum	Container ID	Products
L0612485-02	307589	300

Bottle: 1

Seq.	Purpose	From	To	Date/Time	Accept	Relinquish
1	LOGIN			20-DEC-2006 12:24	BRG	
2	ANALYZ	L1	WET	20-DEC-2006 12:29	DSF	BRG
3	STORE	WET	A1	21-DEC-2006 09:40	JKT	DSF
4	ANALYZ	A1	WET	27-DEC-2006 10:19	DIH	JS
5	STORE	WET	A1	02-JAN-2007 07:47	JS	DIH

Samplenum	Container ID	Products
L0612485-01	307585	300

Bottle: 1

Seq.	Purpose	From	To	Date/Time	Accept	Relinquish
1	LOGIN			20-DEC-2006 12:24	BRG	
2	ANALYZ	L1	WET	20-DEC-2006 12:29	DSF	BRG
3	STORE	WET	A1	21-DEC-2006 09:40	JKT	DSF

KEMRON Environmental Services
Internal Chain of Custody Report

00096046

Login: L0612485
Account: 2773
Project: 2773.025
Samples: 7
Due Date: 29-DEC-2006

Samplenum	Container ID	Products
L0612485-01	307587	RSK175

Bottle: 1

Seq.	Purpose	From	To	Date/Time	Accept	Relinquish
1	LOGIN			20-DEC-2006 12:24	BRG	
2	ANALYZ	V1	ORG4	20-DEC-2006 14:32	JLS	JS

Bottle: 2

Seq.	Purpose	From	To	Date/Time	Accept	Relinquish
1	LOGIN			20-DEC-2006 12:24	BRG	
2	ANALYZ	V1	ORG4	20-DEC-2006 14:32	JLS	JS

Bottle: 3

Seq.	Purpose	From	To	Date/Time	Accept	Relinquish
1	LOGIN			20-DEC-2006 12:24	BRG	
2	ANALYZ	V1	ORG4	20-DEC-2006 14:32	JLS	JS

Samplenum	Container ID	Products
L0612485-05	307604	TIC TOC

Bottle: 1

Seq.	Purpose	From	To	Date/Time	Accept	Relinquish
1	LOGIN			20-DEC-2006 12:24	BRG	
2	ANALYZ	W1	WET	26-DEC-2006 13:38	DIH	BRG
3	STORE	WET	A1	27-DEC-2006 07:21	BRG	DIH

Samplenum	Container ID	Products
L0612485-06	307606	826-SPE

Bottle: 1

Seq.	Purpose	From	To	Date/Time	Accept	Relinquish
1	LOGIN			20-DEC-2006 12:24	BRG	
2	ANALYZ	V1	ORG4	21-DEC-2006 11:55	FJB	JKT

Bottle: 2

Seq.	Purpose	From	To	Date/Time	Accept	Relinquish
1	LOGIN			20-DEC-2006 12:24	BRG	
2	ANALYZ	V1	ORG4	21-DEC-2006 11:55	FJB	JKT

Bottle: 3

Seq.	Purpose	From	To	Date/Time	Accept	Relinquish
1	LOGIN			20-DEC-2006 12:24	BRG	
2	ANALYZ	V1	ORG4	21-DEC-2006 11:55	FJB	JKT

KEMRON Environmental Services
Internal Chain of Custody Report

00096047

Login: L0612485
Account: 2773
Project: 2773.025
Samples: 7
Due Date: 29-DEC-2006

Samplenum	Container ID	Products
L0612485-02	307592	TIC TOC

Bottle: 1

Seq.	Purpose	From	To	Date/Time	Accept	Relinquish
1	LOGIN			20-DEC-2006 12:24	BRG	
2	ANALYZ	W1	WET	26-DEC-2006 13:38	DIH	BRG
3	STORE	WET	A1	27-DEC-2006 07:21	BRG	DIH

Samplenum	Container ID	Products
L0612485-03	307596	TIC TOC

Bottle: 1

Seq.	Purpose	From	To	Date/Time	Accept	Relinquish
1	LOGIN			20-DEC-2006 12:24	BRG	
2	ANALYZ	W1	WET	26-DEC-2006 13:38	DIH	BRG
3	STORE	WET	A1	27-DEC-2006 07:21	BRG	DIH

Samplenum	Container ID	Products
L0612485-06	307607	RSK175

Bottle: 1

Seq.	Purpose	From	To	Date/Time	Accept	Relinquish
1	LOGIN			20-DEC-2006 12:24	BRG	
2	ANALYZ	V1	ORG4	20-DEC-2006 14:32	JLS	JS

Bottle: 2

Seq.	Purpose	From	To	Date/Time	Accept	Relinquish
1	LOGIN			20-DEC-2006 12:24	BRG	
2	ANALYZ	V1	ORG4	20-DEC-2006 14:32	JLS	JS

Bottle: 3

Seq.	Purpose	From	To	Date/Time	Accept	Relinquish
1	LOGIN			20-DEC-2006 12:24	BRG	
2	ANALYZ	V1	ORG4	20-DEC-2006 14:32	JLS	JS

Samplenum	Container ID	Products
L0612485-06	307605	300

Bottle: 1

Seq.	Purpose	From	To	Date/Time	Accept	Relinquish
1	LOGIN			20-DEC-2006 12:24	BRG	
2	ANALYZ	L1	WET	20-DEC-2006 12:29	DSF	BRG
3	STORE	WET	A1	21-DEC-2006 09:40	JKT	DSF

KEMRON Environmental Services
Internal Chain of Custody Report

00096048

Login: L0612485
Account: 2773
Project: 2773.025
Samples: 7
Due Date: 29-DEC-2006

Samplenum	Container ID	Products
L0612485-07	307609	826-SPE

Bottle: 1

Seq.	Purpose	From	To	Date/Time	Accept	Relinquish
1	LOGIN			20-DEC-2006 12:24	BRG	
2	ANALYZ	V1	ORG4	21-DEC-2006 11:55	FJB	JKT

Bottle: 2

Seq.	Purpose	From	To	Date/Time	Accept	Relinquish
1	LOGIN			20-DEC-2006 12:24	BRG	
2	ANALYZ	V1	ORG4	21-DEC-2006 11:55	FJB	JKT

Bottle: 3

Seq.	Purpose	From	To	Date/Time	Accept	Relinquish
1	LOGIN			20-DEC-2006 12:24	BRG	
2	ANALYZ	V1	ORG4	21-DEC-2006 11:55	FJB	JKT

Samplenum	Container ID	Products
L0612485-04	307599	RSK175

Bottle: 1

Seq.	Purpose	From	To	Date/Time	Accept	Relinquish
1	LOGIN			20-DEC-2006 12:24	BRG	
2	ANALYZ	V1	ORG4	20-DEC-2006 14:32	JLS	JS

Bottle: 2

Seq.	Purpose	From	To	Date/Time	Accept	Relinquish
1	LOGIN			20-DEC-2006 12:24	BRG	
2	ANALYZ	V1	ORG4	20-DEC-2006 14:32	JLS	JS

Bottle: 3

Seq.	Purpose	From	To	Date/Time	Accept	Relinquish
1	LOGIN			20-DEC-2006 12:24	BRG	
2	ANALYZ	V1	ORG4	20-DEC-2006 14:32	JLS	JS

Samplenum	Container ID	Products
L0612485-06	307608	TIC TOC

Bottle: 1

Seq.	Purpose	From	To	Date/Time	Accept	Relinquish
1	LOGIN			20-DEC-2006 12:24	BRG	
2	ANALYZ	W1	WET	26-DEC-2006 13:38	DIH	BRG
3	STORE	WET	A1	02-JAN-2007 07:47	JS	DIH

KEMRON Environmental Services
Internal Chain of Custody Report

00096049

Login: L0612485
Account: 2773
Project: 2773.025
Samples: 7
Due Date: 29-DEC-2006

Samplenum	Container ID	Products
L0612485-04	307597	300

Bottle: 1

Seq.	Purpose	From	To	Date/Time	Accept	Relinquish
1	LOGIN			20-DEC-2006 12:24	BRG	
2	ANALYZ	L1	WET	20-DEC-2006 12:29	DSF	BRG
3	STORE	WET	A1	21-DEC-2006 09:40	JKT	DSF

Samplenum	Container ID	Products
L0612485-01	307586	826-SPE

Bottle: 1

Seq.	Purpose	From	To	Date/Time	Accept	Relinquish
1	LOGIN			20-DEC-2006 12:24	BRG	
2	ANALYZ	V1	ORG4	21-DEC-2006 11:54	FJB	JKT

Bottle: 2

Seq.	Purpose	From	To	Date/Time	Accept	Relinquish
1	LOGIN			20-DEC-2006 12:24	BRG	
2	ANALYZ	V1	ORG4	21-DEC-2006 11:54	FJB	JKT

Bottle: 3

Seq.	Purpose	From	To	Date/Time	Accept	Relinquish
1	LOGIN			20-DEC-2006 12:24	BRG	
2	ANALYZ	V1	ORG4	21-DEC-2006 11:54	FJB	JKT

Samplenum	Container ID	Products
L0612485-03	307594	826-SPE

Bottle: 1

Seq.	Purpose	From	To	Date/Time	Accept	Relinquish
1	LOGIN			20-DEC-2006 12:24	BRG	
2	ANALYZ	V1	ORG4	21-DEC-2006 11:54	FJB	JKT

Bottle: 2

Seq.	Purpose	From	To	Date/Time	Accept	Relinquish
1	LOGIN			20-DEC-2006 12:24	BRG	
2	ANALYZ	V1	ORG4	21-DEC-2006 11:54	FJB	JKT

Bottle: 3

Seq.	Purpose	From	To	Date/Time	Accept	Relinquish
1	LOGIN			20-DEC-2006 12:24	BRG	
2	ANALYZ	V1	ORG4	21-DEC-2006 11:54	FJB	JKT

KEMRON Environmental Services
Internal Chain of Custody Report

00096050

Login: L0612485
Account: 2773
Project: 2773.025
Samples: 7
Due Date: 29-DEC-2006

Samplenum	Container ID	Products
L0612485-04	307598	826-SPE

Bottle: 1

Seq.	Purpose	From	To	Date/Time	Accept	Relinquish
1	LOGIN			20-DEC-2006 12:24	BRG	
2	ANALYZ	V1	ORG4	21-DEC-2006 11:54	FJB	JKT

Bottle: 2

Seq.	Purpose	From	To	Date/Time	Accept	Relinquish
1	LOGIN			20-DEC-2006 12:24	BRG	
2	ANALYZ	V1	ORG4	21-DEC-2006 11:54	FJB	JKT

Bottle: 3

Seq.	Purpose	From	To	Date/Time	Accept	Relinquish
1	LOGIN			20-DEC-2006 12:24	BRG	
2	ANALYZ	V1	ORG4	21-DEC-2006 11:54	FJB	JKT

Samplenum	Container ID	Products
L0612485-01	307588	TIC TOC

Bottle: 1

Seq.	Purpose	From	To	Date/Time	Accept	Relinquish
1	LOGIN			20-DEC-2006 12:24	BRG	
2	ANALYZ	W1	WET	26-DEC-2006 13:38	DIH	BRG
3	STORE	WET	A1	27-DEC-2006 07:21	BRG	DIH

Samplenum	Container ID	Products
L0612485-03	307595	RSK175

Bottle: 1

Seq.	Purpose	From	To	Date/Time	Accept	Relinquish
1	LOGIN			20-DEC-2006 12:24	BRG	
2	ANALYZ	V1	ORG4	20-DEC-2006 14:32	JLS	JS

Bottle: 2

Seq.	Purpose	From	To	Date/Time	Accept	Relinquish
1	LOGIN			20-DEC-2006 12:24	BRG	
2	ANALYZ	V1	ORG4	20-DEC-2006 14:32	JLS	JS

Bottle: 3

Seq.	Purpose	From	To	Date/Time	Accept	Relinquish
1	LOGIN			20-DEC-2006 12:24	BRG	
2	ANALYZ	V1	ORG4	20-DEC-2006 14:32	JLS	JS

KEMRON Environmental Services
Internal Chain of Custody Report

00096051

Login: L0612485
Account: 2773
Project: 2773.025
Samples: 7
Due Date: 29-DEC-2006

Samplenum	Container ID	Products
L0612485-05	307602	826-SPE

Bottle: 1

Seq.	Purpose	From	To	Date/Time	Accept	Relinquish
1	LOGIN			20-DEC-2006 12:24	BRG	
2	ANALYZ	V1	ORG4	21-DEC-2006 11:54	FJB	JKT

Bottle: 2

Seq.	Purpose	From	To	Date/Time	Accept	Relinquish
1	LOGIN			20-DEC-2006 12:24	BRG	
2	ANALYZ	V1	ORG4	21-DEC-2006 11:54	FJB	JKT

Bottle: 3

Seq.	Purpose	From	To	Date/Time	Accept	Relinquish
1	LOGIN			20-DEC-2006 12:24	BRG	
2	ANALYZ	V1	ORG4	21-DEC-2006 11:55	FJB	JKT

Samplenum	Container ID	Products
L0612485-05	307603	RSK175

Bottle: 1

Seq.	Purpose	From	To	Date/Time	Accept	Relinquish
1	LOGIN			20-DEC-2006 12:24	BRG	
2	ANALYZ	V1	ORG4	20-DEC-2006 14:32	JLS	JS

Bottle: 2

Seq.	Purpose	From	To	Date/Time	Accept	Relinquish
1	LOGIN			20-DEC-2006 12:24	BRG	
2	ANALYZ	V1	ORG4	20-DEC-2006 14:32	JLS	JS

Bottle: 3

Seq.	Purpose	From	To	Date/Time	Accept	Relinquish
1	LOGIN			20-DEC-2006 12:24	BRG	
2	ANALYZ	V1	ORG4	20-DEC-2006 14:32	JLS	JS

KEMRON
ENVIRONMENTAL SERVICES

156 Starlite Drive, Marietta, OH 45750 • TEL 740-373-4071 • FAX 740-373-4835 • http://www.kemron.com

Laboratory Report Number: L08020032

Please find enclosed the analytical results for the samples you submitted to KEMRON Environmental Services.

Review and compilation of your report was completed by KEMRON's Sales and Service Team. If you have questions, comments or require further assistance regarding this report, please contact your team member noted in the reviewed box bleow at 800-373-4071. Team member e-mail addresses also appear here for your convenience.

Debra Elliott - Team Leader
delliott@kemron-lab.com

Amanda Fickiesen - Client Services Specialist
afickiesen@kemron-lab.com

Kathy Albertson - Team Chemist/Data Specialist
kalbertson@kemron-lab.com

Annie Brown - Client Services Specialist
abrown@kemron-lab.com

Stephanie Mossburg - Team Chemist/Data Specialist
smossburg@kemron-lab.com

Katie Barnes - Team Assistant
kbarnes@kemron-lab.com

Brenda Gregory - Client Services Specialist
bgregory@kemron-lab.com

Jacqueline Parsons - Team Assistant
jparsons@kemron-lab.com

Tony Long - Client Services Specialist
tlong@kemron-lab.com

This report was reviewed on February 08, 2008.

Stephanie Mossburg

STEPHANIE MOSSBURG - Team Chemist/Data Specialist

I certify that all test results meet all of the requirements of the NELAP standards and other applicable contract terms and conditions. All results for soil samples are reported on a 'dry-weight' basis unless specified otherwise. Analytical results for water and wastes are reported on a 'as received' basis unless specified otherwise. A statement of uncertainty for each analysis is available upon request. This laboratory report shall not be reproduced, except in full, without the written approval of KEMRON Environmental Services.

This report was certified on February 08, 2008.

David E. Vandenberg

David Vandenberg - Vice President

FL DOH NELAP ID: E8755
This report contains a total of 55 pages.

Protecting Our Environmental Future

KEMRON REPORT L08020032
PREPARED FOR Shaw E I, Inc.
WORK ID: LONGHORN AAP KARNACK TX

1.0 Introduction 3
2.1 Volatiles Data 9
2.1.1 Volatiles GCMS Data (8260) 10
2.1.1.1 Summary Data 11
2.1.1.2 QC Summary Data 17
3.0 Attachments 50

1.0 Introduction

KEMRON ENVIRONMENTAL SERVICES
REPORT NARRATIVE

KEMRON Login No.: L08020032

CHAIN OF CUSTODY: The chain of custody number was 10236.

SHIPMENT CONDITIONS: The chain of custody forms were received sealed in a cooler. The cooler temperature was 3 degrees C.

SAMPLE MANAGEMENT: All samples received were intact.

I certify that this data package is in compliance with the terms and conditions agreed to by the client and KEMRON Environmental Services, both technically and for completeness, except for the conditions noted above. Release of the data contained in this hardcopy data package has been authorized by the Laboratory Manager or designated person, as verified by the following signature.

Approved: 06-FEB-08
Stephanie Mossburg

Laboratory Data Package Cover Page

00096056

This data Package consists of:

This signature page, the laboratory review checklists, and the following reportable data:

✓R1 Field chain-of-custody documentation;

✓R2 sample identification cross-reference;

R3 Test reports (analytical data sheets) for each enviornmental sample that includes:

a) Items consistant with NELAC 5.13 or ISO/IEC 17025 Section 5.10
b) dilution factors,
c) preparation methods,
d) Cleanup methods, and
e) If required for the project, tentatively identified compounds (TICs)

✓R4 Surrogate recovery data including:

a) Calculated recovery (%R) for each analyte, and
b) The laboratory's surrogate QC limits.

✓R5 Test reports/summary forms for blank samples;

✓R6 Test reports/summary forms for laboratory control samples (LCSs) including:

a) LCS spiking amount,
b) Calculated %R for each analyte, and
c) The laboratory"s LCS QC limits.

✓R7 Test reports for project matrix spike/matrix spike duplicates (MS/MSDs) including:

a) Samples associated with the MS/MSD clearly identified,
b) MS/MSD spiking amounts,
c) Concentration of each MS/MSD analyte measured in the parent and spiked samples,
d) Calculated %R and relative percent differences (RPDs), and
e) The laboratory's MS/MSD QC limits

✓R8 Laboratory analytical duplicate (if applicable) revocery and precision:

a) the amount of analyte measured in the duplicate,
b) the calculated RPD, and
c) the laboratory's QC limits for anlytical duplicates.

✓R9 List of method quantitation limits (MQLs) for each analyte for each method and matrix;

✓R10 Other problems or anomalies.

✓The exception Report for every "No" or "Not Reviewed (NR)" item IN laboratory review checklist.

Release statement: I am responsible for the release of this laboratory data package. This data package has been reviewed by the laboratory and is complete and technically compliant with the requirements of the methods used, except where noted by the laboratory in the attached exceptions reports. By my signature below, I affirm to the best of my knowledge, all problems/anomalies, observed by the laboratory as having the potential to affect the quality of the data, have been identified by the laboratoy in the Laboratory Review Checklist, and no information or data have been knowingly withheld that would affect the quality of the data.

Check, if applicable: [] This laboratory is an in-house laboratory controlled by the person repsonding to rule. The official signing the cover page of the rule-required report (for example, the APAR) in which these data are used is responsible for releasing this data package and is by signature affirming the above release statement is true.

MIKE D. ALBERTSON		Volatiles Lab Supervisor	February 8, 2008
Name (Printed)	Signature	Official Title (printed)	DATE

RG-366/TRRP-13 December 2002 A1

KEMRON Environmental Services
Laboratory Review Checklist

Laboratory Name:	KEMRON
Laboratory Log Number:	L08020032
Project Name:	798-LONGHORN
Method:	8260B
Prep Batch Number(s):	262326
Reviewer Name:	MIKE D. ALBERTSON
LRC Date:	February 08, 2008

Description	Yes	No	NA(1)	NR(2)	ER(3)
Chain-Of-Custody (C-O-C)					
Did samples meet the laboratory's standard conditions of sample acceptability upon receipt?	✓				
Were all departures from standard conditions described in an exception report?	✓				
Sample and quality control (QC) identification					
Are all field sample ID numbers cross-referenced to the laboratory ID numbers?	✓				
Are all laboratory ID numbers cross-referenced to the corresponding QC data?	✓				
Test reports					
Were all samples prepared and analyzed within holding times?	✓				
Other than those results <MQL, were all other raw values bracketed by calibration standards?	✓				
Were calculations checked by a peer or supervisor?	✓				
Were all analyte identifications checked by a peer or supervisor?	✓				
Were sample quantitation limits reported for all analytes not detected?	✓				
Were all results for soil and sediment samples reported on a dry weight basis?	✓				
Were % moisture (or solids) reported for all soil and sediment samples?	✓				
If required for the project, TICs reported?			✓		
Surrogate recovery data					
Were surrogates added prior to extraction?	✓				
Were surrogate percent recoveries in all samples within the laboratory QC limits?	✓				
Test reports/summary forms for blank samples					
Were appropriate type(s) of blanks analyzed?	✓				
Were blanks analyzed at the appropriate frequency?	✓				
Were method blanks taken through the entire analytical process, including preparation and, if applicable, cleanup procedures?	✓				
Were blank concentrations <MQL?	✓				
Laboratory control samples (LCS):					
Were all COCs included in the LCS?	✓				
Was each LCS taken through the entire analytical procedure, including prep and cleanup steps?	✓				
Were LCSs analyzed at the required frequency?	✓				
Were LCS (and LCSD, if applicable) %Rs within the laboratory QC limits?		✓			1
Does the detectability data document the laboratorys capability to detect the COCs at the MDL used to calculate the SQLs?	✓				
Was the LCSD RPD within QC limits?	✓				
Matrix spike (MS) and matrix spike duplicate (MSD) data					
Were the project/method specified analytes included in the MS and MSD?			✓		
Were MS/MSD analyzed at the appropriate frequency?			✓		
Were MS (and MSD, if applicable) %Rs within the laboratory QC limits?			✓		

Description	Yes	No	NA(1)	NR(2)	ER(3)
Were MS/MSD RPDs within laboratory QC limits?			✓		
Analytical duplicate data					
Were appropriate analytical duplicates analyzed for each matrix?			✓		
Were analytical duplicates analyzed at the appropriate frequency?			✓		
Were RPDs or relative standard deviations within the laboratory QC limits?			✓		
Method quantitation limits (MQLs):					
Are the MQLs for each method analyte included in the laboratory data package?	✓				
Do the MQLs correspond to the concentration of the lowest non-zero calibration standard?	✓				
Are unadjusted MQLs included in the laboratory data package?	✓				
Other problems/anomalies					
Are all known problems/anomalies/special conditions noted in this LRC and ER?	✓				
Were all necessary corrective actions performed for the reported data?	✓				
Was applicable and available technology used to lower the SQL minimize the matrix interference affects on the sample results?	✓				
ICAL					
Were response factors and/or relative response factors for each analyte within QC limits?	✓				
Were percent RSDs or correlation coefficient criteria met?	✓				
Was the number of standards recommended in the method used for all analytes?	✓				
Were all points generated between the lowest and highest standard used to calculate the curve?	✓				
Are ICAL data available for all instruments used?	✓				
Has the initial calibration curve been verified using an appropriate second source standard?	✓				
Initial and continuing calibration verification (ICV and CCV) and continuing calibration blank (CCB):					
Was the CCV analyzed at the method-required frequency?	✓				
Were percent differences for each analyte within the method-required QC limits?	✓				
Was the ICAL curve verified for each analyte?	✓				
Was the absolute value of the analyte concentration in the inorganic CCB <MDL?			✓		
Mass spectral tuning:					
Was the appropriate compound for the method used for tuning?	✓				
Were ion abundance data within the method-required QC limits?	✓				
Internal standards (IS):					
Were IS area counts and retention times within the method-required QC limits?	✓				
Raw data (NELAC section 1 appendix A glossary, and section 5.12 or ISO/IEC 17025 section 4.12.2)					
Were the raw data (for example, chromatograms, spectral data) reviewed by an analyst?	✓				
Were data associated with manual integrations flagged on the raw data?	✓				
Dual column confirmation					
Did dual column confirmation results meet the method-required QC?			✓		
Tentatively identified compounds (TICs):					
If TICs were requested, were the mass spectra and TIC data subject to appropriate checks?			✓		
Interference Check Sample (ICS) results:					
Were percent recoveries within method QC limits?			✓		
Serial dilutions, post digestion spikes, and method of standard additions					
Were percent differences, recoveries, and the linearity within the QC limits specified in the method?			✓		
Method detection limit (MDL) studies					
Was a MDL study performed for each reported analyte?	✓				
Is the MDL either adjusted or supported by the analysis of DCSs?	✓				
Proficiency test reports:					
Was the laboratory's performance acceptable on the applicable proficiency tests or evaluation studies?	✓				

00096058

Description	Yes	No	NA(1)	NR(2)	ER(3)
Standards documentation					
Are all standards used in the analyses NIST-traceable or obtained from other appropriate sources?	✓				
Compound/analyte identification procedures					
Are the procedures for compound/analyte identification documented?	✓				
Demonstration of analyst competency (DOC)					
Was DOC conducted consistent with NELAC Chapter 5C or ISO/IEC 4?	✓				
Is documentation of the analyst's competency up-to-date and on file?	✓				
Verification/validation documentation for methods (NELAC Chap 5 or ISO/IEC 17025 Section 5)					
Are all the methods used to generate the data documented, verified, and validated, where applicable?	✓				
Laboratory standard operating procedures (SOPs):					
Are laboratory SOPs current and on file for each method performed?	✓				

00096059

EXCEPTIONS REPORT

ER# - Description

#1: Dichlorodifluoromethane exceeded the upper advisory limit.

Footnotes:

(1) NA = Not applicable to method or project

(2) NR = Not reviewed

(3) ER# = Exception report number

2.1 Volatiles Data

2.1.1 Volatiles GCMS Data (8260)

2.1.1.1 Summary Data

LABORATORY REPORT

L08020032

00096063

02/08/08 15:14

Submitted By

KEMRON Environmental Services
156 Starlite Drive
Marietta , OH 45750
(740) 373 - 4071

For

Account Name: Shaw E & I, Inc.
ABB Lummus Biulding
3010 Briarpark Drive Suite 4N
Houston, TX 77042
Attention: Larry Duty

Project Number: 2773.025
Project: Longhorn AAP
Site: LHAAP

P.O. Number: 322255 OP

Sample Analysis Summary

Client ID	Lab ID	Method	Dilution	Date Received
29WW37-020108	L08020032-01	8260B	1	02-FEB-08
29WW39-020108	L08020032-02	8260B	1	02-FEB-08

Report Number: **L08020032**
Report Date : **February 8, 2008**

00096064

Sample Number: **L08020032-01**
Client ID: **29WW37-020108**
Matrix: **Water**
Workgroup Number: **WG262326**
Collect Date: **02/01/2008 13:35**
Sample Tag: **01**

PrePrep Method: **NONE**
Prep Method: **5030B**
Analytical Method: **8260B**
Analyst: **CMS**
Dilution: **1**
Units: **ug/L**

Instrument: **HPMS6**
Prep Date: **02/05/2008 12:26**
Cal Date: **12/11/2007 14:48**
Run Date: **02/05/2008 12:26**
File ID: **6M72734**

Analyte	CAS. Number	Result	Qual	PQL	SDL
Acetone	67-64-1		U	10.0	2.50
Benzene	71-43-2		U	1.00	0.125
Bromobenzene	108-86-1		U	1.00	0.125
Bromochloromethane	74-97-5		U	1.00	0.200
Bromodichloromethane	75-27-4		U	1.00	0.250
Bromoform	75-25-2		U	1.00	0.500
Bromomethane	74-83-9		U	1.00	0.500
2-Butanone	78-93-3		U	10.0	2.50
n-Butylbenzene	104-51-8		U	1.00	0.250
sec-Butylbenzene	135-98-8		U	1.00	0.250
tert-Butylbenzene	98-06-6		U	1.00	0.250
Carbon disulfide	75-15-0		U	1.00	0.500
Carbon tetrachloride	56-23-5		U	1.00	0.250
Chlorobenzene	108-90-7		U	1.00	0.125
Chlorodibromomethane	124-48-1		U	1.00	0.250
Chloroethane	75-00-3		U	1.00	0.500
2-Chloroethyl vinyl ether	110-75-8		U	10.0	2.00
Chloroform	67-66-3		U	1.00	0.125
Chloromethane	74-87-3		U	1.00	0.250
2-Chlorotoluene	95-49-8		U	1.00	0.125
4-Chlorotoluene	106-43-4		U	1.00	0.250
1,2-Dibromo-3-chloropropane	96-12-8		U	5.00	1.00
1,2-Dibromoethane	106-93-4		U	1.00	0.250
Dibromomethane	74-95-3		U	1.00	0.250
1,2-Dichlorobenzene	95-50-1		U	1.00	0.125
1,3-Dichlorobenzene	541-73-1		U	1.00	0.250
1,4-Dichlorobenzene	106-46-7		U	1.00	0.125
Dichlorodifluoromethane	75-71-8		U	1.00	0.250
1,1-Dichloroethane	75-34-3		U	1.00	0.125
1,2-Dichloroethane	107-06-2		U	1.00	0.250
1,1-Dichloroethene	75-35-4		U	1.00	0.500
cis-1,2-Dichloroethene	156-59-2		U	1.00	0.250
trans-1,2-Dichloroethene	156-60-5		U	1.00	0.250
1,2-Dichloropropane	78-87-5		U	1.00	0.200
1,3-Dichloropropane	142-28-9		U	1.00	0.200
2,2-Dichloropropane	594-20-7		U	1.00	0.250
cis-1,3-Dichloropropene	10061-01-5		U	1.00	0.250
trans-1,3-Dichloropropene	10061-02-6		U	1.00	0.500
1,1-Dichloropropene	563-58-6		U	1.00	0.250
Ethylbenzene	100-41-4		U	1.00	0.250
2-Hexanone	591-78-6		U	10.0	2.50
Hexachlorobutadiene	87-68-3		U	1.00	0.250
Isopropylbenzene	98-82-8		U	1.00	0.250
p-Isopropyltoluene	99-87-6		U	1.00	0.250
4-Methyl-2-pentanone	108-10-1		U	10.0	2.50
Methylene chloride	75-09-2	1.03	J	5.00	0.250
Naphthalene	91-20-3		U	1.00	0.200
n-Propylbenzene	103-65-1		U	1.00	0.125

Report Number: **L08020032**
Report Date : **February 8, 2008**

00096065

Sample Number: **L08020032-01**
Client ID: **29WW37-020108**
Matrix: **Water**
Workgroup Number: **WG262326**
Collect Date: **02/01/2008 13:35**
Sample Tag: **01**

PrePrep Method: **NONE**
Prep Method: **5030B**
Analytical Method: **8260B**
Analyst: **CMS**
Dilution: **1**
Units: **ug/L**

Instrument: **HPMS6**
Prep Date: **02/05/2008 12:26**
Cal Date: **12/11/2007 14:48**
Run Date: **02/05/2008 12:26**
File ID: **6M72734**

Analyte	CAS. Number	Result	Qual	PQL	SDL
Styrene	100-42-5		U	1.00	0.125
1,1,1,2-Tetrachloroethane	630-20-6		U	1.00	0.250
1,1,2,2-Tetrachloroethane	79-34-5		U	1.00	0.125
Tetrachloroethene	127-18-4		U	1.00	0.250
Toluene	108-88-3		U	1.00	0.250
1,2,3-Trichlorobenzene	87-61-6		U	1.00	0.125
1,2,4-Trichlorobenzene	120-82-1		U	1.00	0.200
1,1,1-Trichloroethane	71-55-6		U	1.00	0.250
1,1,2-Trichloroethane	79-00-5		U	1.00	0.250
Trichloroethene	79-01-6		U	1.00	0.250
Trichlorofluoromethane	75-69-4		U	1.00	0.250
1,2,3-Trichloropropane	96-18-4		U	1.00	0.500
1,2,4-Trimethylbenzene	95-63-6		U	1.00	0.250
1,3,5-Trimethylbenzene	108-67-8		U	1.00	0.250
Vinyl acetate	108-05-4		U	10.0	2.50
Vinyl chloride	75-01-4		U	1.00	0.250
o-Xylene	95-47-6		U	1.00	0.250
m-,p-Xylene	136777-61-2		U	1.00	0.500

Surrogate	% Recovery	Lower	Upper	Qual
Dibromofluoromethane	99.6	86	118	
1,2-Dichloroethane-d4	99.8	80	120	
Toluene-d8	104	88	110	
4-Bromofluorobenzene	103	86	115	

U Not detected at or above adjusted sample detection limit
J The analyte was positively identified, but the quantitation was below the RL

Report Number: **L08020032**
Report Date : **February 8, 2008**

00096066

Sample Number: **L08020032-02**
Client ID: **29WW39-020108**
Matrix: **Water**
Workgroup Number: **WG262326**
Collect Date: **02/01/2008 15:30**
Sample Tag: **01**

PrePrep Method: **NONE**
Prep Method: **5030B**
Analytical Method: **8260B**
Analyst: **CMS**
Dilution: **1**
Units: **ug/L**

Instrument: **HPMS6**
Prep Date: **02/05/2008 11:54**
Cal Date: **12/11/2007 14:48**
Run Date: **02/05/2008 11:54**
File ID: **6M72733**

Analyte	CAS. Number	Result	Qual	PQL	SDL
Acetone	67-64-1		U	10.0	2.50
Benzene	71-43-2		U	1.00	0.125
Bromobenzene	108-86-1		U	1.00	0.125
Bromochloromethane	74-97-5		U	1.00	0.200
Bromodichloromethane	75-27-4		U	1.00	0.250
Bromoform	75-25-2		U	1.00	0.500
Bromomethane	74-83-9		U	1.00	0.500
2-Butanone	78-93-3		U	10.0	2.50
n-Butylbenzene	104-51-8		U	1.00	0.250
sec-Butylbenzene	135-98-8		U	1.00	0.250
tert-Butylbenzene	98-06-6		U	1.00	0.250
Carbon disulfide	75-15-0		U	1.00	0.500
Carbon tetrachloride	56-23-5		U	1.00	0.250
Chlorobenzene	108-90-7		U	1.00	0.125
Chlorodibromomethane	124-48-1		U	1.00	0.250
Chloroethane	75-00-3		U	1.00	0.500
2-Chloroethyl vinyl ether	110-75-8		U	10.0	2.00
Chloroform	67-66-3		U	1.00	0.125
Chloromethane	74-87-3		U	1.00	0.250
2-Chlorotoluene	95-49-8		U	1.00	0.125
4-Chlorotoluene	106-43-4		U	1.00	0.250
1,2-Dibromo-3-chloropropane	96-12-8		U	5.00	1.00
1,2-Dibromoethane	106-93-4		U	1.00	0.250
Dibromomethane	74-95-3		U	1.00	0.250
1,2-Dichlorobenzene	95-50-1		U	1.00	0.125
1,3-Dichlorobenzene	541-73-1		U	1.00	0.250
1,4-Dichlorobenzene	106-46-7		U	1.00	0.125
Dichlorodifluoromethane	75-71-8		U	1.00	0.250
1,1-Dichloroethane	75-34-3		U	1.00	0.125
1,2-Dichloroethane	107-06-2		U	1.00	0.250
1,1-Dichloroethene	75-35-4		U	1.00	0.500
cis-1,2-Dichloroethene	156-59-2		U	1.00	0.250
trans-1,2-Dichloroethene	156-60-5		U	1.00	0.250
1,2-Dichloropropane	78-87-5		U	1.00	0.200
1,3-Dichloropropane	142-28-9		U	1.00	0.200
2,2-Dichloropropane	594-20-7		U	1.00	0.250
cis-1,3-Dichloropropene	10061-01-5		U	1.00	0.250
trans-1,3-Dichloropropene	10061-02-6		U	1.00	0.500
1,1-Dichloropropene	563-58-6		U	1.00	0.250
Ethylbenzene	100-41-4		U	1.00	0.250
2-Hexanone	591-78-6		U	10.0	2.50
Hexachlorobutadiene	87-68-3		U	1.00	0.250
Isopropylbenzene	98-82-8		U	1.00	0.250
p-Isopropyltoluene	99-87-6		U	1.00	0.250
4-Methyl-2-pentanone	108-10-1		U	10.0	2.50
Methylene chloride	75-09-2		U	5.00	0.250
Naphthalene	91-20-3		U	1.00	0.200
n-Propylbenzene	103-65-1		U	1.00	0.125

Report Number: **L08020032**
Report Date : **February 8, 2008**

00096067

Sample Number: **L08020032-02**
Client ID: **29WW39-020108**
Matrix: **Water**
Workgroup Number: **WG262326**
Collect Date: **02/01/2008 15:30**
Sample Tag: **01**

PrePrep Method: **NONE**
Prep Method: **5030B**
Analytical Method: **8260B**
Analyst: **CMS**
Dilution: **1**
Units: **ug/L**

Instrument: **HPMS6**
Prep Date: **02/05/2008 11:54**
Cal Date: **12/11/2007 14:48**
Run Date: **02/05/2008 11:54**
File ID: **6M72733**

Analyte	CAS. Number	Result	Qual	PQL	SDL
Styrene	100-42-5		U	1.00	0.125
1,1,1,2-Tetrachloroethane	630-20-6		U	1.00	0.250
1,1,2,2-Tetrachloroethane	79-34-5		U	1.00	0.125
Tetrachloroethene	127-18-4		U	1.00	0.250
Toluene	108-88-3		U	1.00	0.250
1,2,3-Trichlorobenzene	87-61-6		U	1.00	0.125
1,2,4-Trichlorobenzene	120-82-1		U	1.00	0.200
1,1,1-Trichloroethane	71-55-6		U	1.00	0.250
1,1,2-Trichloroethane	79-00-5		U	1.00	0.250
Trichloroethene	79-01-6		U	1.00	0.250
Trichlorofluoromethane	75-69-4		U	1.00	0.250
1,2,3-Trichloropropane	96-18-4		U	1.00	0.500
1,2,4-Trimethylbenzene	95-63-6		U	1.00	0.250
1,3,5-Trimethylbenzene	108-67-8		U	1.00	0.250
Vinyl acetate	108-05-4		U	10.0	2.50
Vinyl chloride	75-01-4		U	1.00	0.250
o-Xylene	95-47-6		U	1.00	0.250
m-,p-Xylene	136777-61-2		U	1.00	0.500

Surrogate	% Recovery	Lower	Upper	Qual
Dibromofluoromethane	100	86	118	
1,2-Dichloroethane-d4	98.6	80	120	
Toluene-d8	104	88	110	
4-Bromofluorobenzene	102	86	115	

U Not detected at or above adjusted sample detection limit

2.1.1.2 QC Summary Data

Example 8260 Calculations

1.0 Calculating the Response Factor (RF) from the initial calibration (ICAL) data:

RF = [(Ax) (Cis)] / [(Ais) (Cx)]

where:	Example
Ax = Area of the characteristic ion for the compound being measured:	3399156
Cis = Concentration of the specific internal standard (ug/mL)	25
Ais = Area of the characteristic ion of the specific internal standard	846471
Cx = Concentration of the compound in the standard being measured (ug/mL)	100
RF = Calculated Response Factor	**1.0039**

2.0 Calculating the concentration (C) of a compound in water using the average RF: *

Cx = [(Ax) (Cis) (Vn)(D)] / [(Ais) (RF) (Vs)]

where:	**Example**
Ax = Area of the characteristic ion for the compound being measured	**3122498**
Cis = Concentration of the specific internal standard (ug/L)	**25**
D = Dilution factor for sample as a multiplier (10x = 10)	**1**
Ais = Area of the characteristic ion of the specific internal standard	**611048**
RF = Average RF from the ICAL	**1.004**
Vs = Purge volume of sample (mL)	**10**
Vn = Nominal purge volume of sample (mL) (10.0 mL)	**10**
Cx = Concentration of the compound in the sample being measured (ug/L)	**127.2428**

3.0 Calculating the concentration (C) of a compound in soil using the average RF: *

Cx = [(Ax) (Cis) (Wn)(D)] / [(Ais) (RF) (Ws)]

where:	**Example**
Ax = Area of the characteristic ion for the compound being measured	**3122498**
Cis = Concentration of the specific internal standard (ug/L)	**25**
D = Dilution factor for sample as a multiplier (10x = 10)	**1**
Ais = Area of the characteristic ion of the specific internal standard	**611048**
RF = Average RF from the ICAL	**1.004**
Ws = Weight of sample purged (g)	**5**
Wn = Nominal purge weight (g) (5.0 g)	**5**
Cx = Concentration of the compound in the sample being measured (ug/L)	**127.2428**

Dry weight correction:

Percent solids (PCT_S)	**50**
Cd = (Cx) (100)/PCT_S	**254.4856**

* Concentrations appearing on the instrument quantitation reports are on-column results and do not take into account initial volume, final volume, and the dilution factor.

4.0 Concentration from Linear Regression

Step 1: Retrieve Curve Data From Plot, y = mx + b

y = response ratio = response of analyte / response of IS = Ax/Ais

x = amount ratio = concentration analyte/concentration internal standard = Cx / Cis

m = slope from curve = 0.213

b = intercept from curve = - 0.00642

Step 2: Calculate y from Quantitation Report

y = 86550/593147 = 0.1459

Step 3: Solve for x

x = (y - b)/m = [(0.1459 -(- 0.00642)]/ 0.213 = 0.7152

Step 4: Solve for analyte concentration Cx

Cx = Cis (x) = (25.0)(0.7152) = 17.88

Example Spreadsheet Calculation:

Slope from curve, m:	**0.213**
Intercept from curve, b:	**-0.00642**
Area of analyte, Ax:	**86550**
Area of Internal Standard , Ais:	**593147**
Concentration of IS, Cis	**25.00**
Response Ratio:	**0.145917**
Amount Ratio:	**0.715195**
Concentration:	**17.87988**
Units of Internal Standard:	**ug/L**

5.0 Concentration from Quadratic Regression

Step 1 - Retrieve Curve Data from Plot, y = Ax^2 + Bx + C
Where:
Ax^2 + Bx + (C - y) = 0
A, B, C = constants from the ICAL quadratic regression
y = Response ratio = Area of analyte/Area of internal standard (IS)
x = Amount ratio = Concentration of analyte/concentration of IS

Step 2: Calculate y from Quantitation Report

y = Ax/Ais

Step 3: Solve for x using the quadratic formula
Ax^2 + Bx + C - y = 0

$$x = \frac{b \pm \sqrt{\left(b^2 - 4a(c - y)\right)}}{2a}$$ (Two possible solutions)

Step 4: Solve for analyte concentration Cx

Cx = (Cis)(Amount ratio)

Example Spreadsheet Calculation:

Value of A from plot:	**-0.00629**	
Value of B from plot:	**0.511**	
Value of C from plot:	**-0.0276**	
Area of unknown from quantitation report:	**293821**	
Area of IS from quantiation report:	**784848**	
Response ratio, y:	**0.374367**	
C - y:	**-0.40197**	
Root 1 - Computed amount ratio , X1:	**80.44567**	
Root 2 - Computed amount ratio , X2:	**0.794396**	use this solution
Concentration of IS, Cis:	**25.00**	
Concentration of analyte, Cx:	**19.86**	ug/L

00096071

KEMRON Environmental Services

Instrument Run Log

Instrument: HPMS6 Dataset: 121107
Analyst1: CMS Analyst2: NA
Method: 8260B SOP: MSV01 Rev: 10
Method: 624 SOP: MSV01 Rev: 9
Method: 5030B SOP: PAT01 Rev: 10
Maintenance Log ID: 22146

Internal Standard: STD23486 Surrogate Standard: STD23588
CCV: STD23557 LCS: STD23438 MS/MSD: NA

Column 1 ID: RTX502.2 Column 2 ID: NA
Workgroups: WG258140

Comments:

Seq.	File ID	Sample Information	pH	Mat	Dil	Reference	Date/Time
1	6M71590	SYSTEM BLANK	NA	1	1		12/11/07 06:55
2	6M71591	BFB STD CHK	NA	1	1	STD23459	12/11/07 07:26
3	6M71592	50ug/L STD CHECK	NA	1	1	STD23522	12/11/07 07:55
4	6M71593	SYSTEM BLANK	NA	1	1		12/11/07 08:30
5	6M71594	WG258140-01 BFB 50ng STD 8260	NA	1	1	STD23459	12/11/07 09:08
6	6M71595	WG258140-01 BFB 50ng STD 8260	NA	1	1	STD23459	12/11/07 09:24
7	6M71596	WG258140-02 0.30ug/L STD 8260	NA	1	1	STD23557	12/11/07 09:50
8	6M71597	WG258140-03 0.40ug/L STD 8260	NA	1	1	STD23557	12/11/07 10:23
9	6M71598	WG258140-04 1ug/L STD 8260	NA	1	1	STD23557	12/11/07 10:55
10	6M71599	WG258140-05 2ug/L STD 8260	NA	1	1	STD23557	12/11/07 11:29
11	6M71600	WG258140-06 5ug/L STD 8260	NA	1	1	STD23557	12/11/07 12:02
12	6M71601	WG258140-07 20ug/L STD 8260	NA	1	1	STD23557	12/11/07 12:34
13	6M71602	WG258140-08 50ug/L STD 8260	NA	1	1	STD23557	12/11/07 13:09
14	6M71603	WG258140-09 100ug/L STD 8260	NA	1	1	STD23557	12/11/07 13:43
15	6M71604	WG258140-10 200ug/L STD 8260	NA	1	1	STD23557	12/11/07 14:16
16	6M71605	WG258140-11 300ug/L STD 8260	NA	1	1	STD23557	12/11/07 14:48
17	6M71606	SYSTEM BLANK	NA	1	1		12/11/07 15:20
18	6M71607	SYSTEM BLANK	NA	1	1		12/11/07 15:52
19	6M71608	WG258140-12 20ug/L ALT SRC STD 8260	NA	1	1	STD23438	12/11/07 16:24
20	6M71609	SYSTEM BLANK	NA	1	1		12/11/07 16:55
21	6M71610	SYSTEM BLANK	NA	1	1		12/11/07 17:27
22	6M71611	SYSTEM BLANK	NA	1	1		12/11/07 17:59
23	6M71612	SYSTEM BLANK	NA	1	1		12/11/07 18:31
24	6M71613	SYSTEM BLANK	NA	1	1		12/11/07 19:03

Comments

Seq.	Rerun	Dil.	Reason	Analytes
5	X			
File ID: 6M71594				
			Tune failed/DNR	
19	X			
File ID: 6M71608				
			DNR	

Approved: December 17, 2007

Page: 1

00096072

KEMRON Environmental Services

Instrument Run Log

Instrument: HPMS6 Dataset: 121207

Analyst1: CMS Analyst2: NA

Method: 8260B SOP: MSV01 Rev: 10

Method: 5030B SOP: PAT01 Rev: 10

Maintenance Log ID: 22149

Internal Standard: STD23486 Surrogate Standard: STD23588

CCV: STD23557 LCS: STD23438 MS/MSD: NA

Column 1 ID: RTX502.2 Column 2 ID: NA

Workgroups: WG258140;WG258265

Comments:

Seq.	File ID	Sample Information	pH	Mat	Dil	Reference	Date/Time
1	6M71615	SYSTEM BLANK	NA	1	1		12/12/07 08:53
2	6M71616	SYSTEM BLANK	NA	1	1		12/12/07 09:25
3	6M71617	WG258264-01 BFB 50ng STD 8260	NA	1	1	STD23459	12/12/07 09:56
4	6M71618	WG258264-02 50ug/L STD 8260	NA	1	1	STD23557	12/12/07 10:18
5	6M71619	WG258266-01 100ug/L A9FOO STD 8260	NA	1	1	STD23433	12/12/07 10:52
6	6M71620	WG258265-01 VBLK1212 BLANK 8260	NA	1	1		12/12/07 11:24
7	6M71621	WG258140-12 20ug/L ALT SRC STD 8260	NA	1	1	STD23438	12/12/07 11:56
8	6M71622	WG258265-02 20ug/L LCS STD 8260	NA	1	1	STD23438	12/12/07 12:28
9	6M71623	WG258265-03 20ug/L LCSDUP STD 8260	NA	1	1	STD23438	12/12/07 12:59
10	6M71624	WG258265-04 100ug/L A9FOOLCS STD 82	NA	1	1	STD23434	12/12/07 13:31
11	6M71625	WG258265-05 100ug/L A9FOOLCSDUP ST	NA	1	1	STD23434	12/12/07 14:03
12	6M71626	L0712285-01 A 826-SPE	=7	1	1		12/12/07 14:35
13	6M71627	L0712285-10 A 826-SPE	=7	1	1		12/12/07 15:07
14	6M71628	L0712285-11 A 826-SPE	=7	1	1		12/12/07 15:38
15	6M71629	L0712285-02 A 826-SPE	=7	1	1		12/12/07 16:10
16	6M71630	L0712285-03 A 826-SPE	=7	1	1		12/12/07 16:42
17	6M71631	L0712285-04 A 826-SPE	=7	1	1		12/12/07 17:14
18	6M71632	L0712285-05 A 826-SPE	=7	1	1		12/12/07 17:45
19	6M71633	L0712285-06 A 826-SPE	=7	1	1		12/12/07 18:17
20	6M71634	L0712285-07 A 826-SPE	=7	1	1		12/12/07 18:49
21	6M71635	L0712285-09 A 826-SPE	=7	1	1		12/12/07 19:21
22	6M71636	L0712285-12 A 826-SPE	=7	1	1		12/12/07 19:53
23	6M71637	L0712285-13 A 826-SPE	=7	1	1		12/12/07 20:25
24	6M71638	L0712285-14 A 826-SPE	=7	1	1		12/12/07 20:56
25	6M71639	L0712285-08 A 1000X 826-SPE D1	=7	1	1000		12/12/07 21:28
26	6M71640	SYSTEM BLANK	NA	1	1		12/12/07 22:00

Comments

Seq.	Rerun	Dil.	Reason	Analytes
25	X	100	Analyzed too dilute	
File ID: 6M71639				

Approved: December 14, 2007

KEMRON Environmental Services
Data Checklist

00096073

Date: 11-DEC-2007
Analyst: CMS
Analyst: NA
Method: 8260B624
Instrument: HPMS6
Curve Workgroup: NA
Runlog ID: 19809
Analytical Workgroups: WG258140

System Performance Check	X
BFB	X
Initial Calibration	X
Average RF	X
Linear Reg or Higher Order Curve	X
Second Source standard % Difference	X
Continuing Calibration /Check Standards	NA
Project/Client Specific Requirements	NA
Special Standards	NA
Blanks	NA
TCL's	NA
Surrogates	NA
LCS (Laboratory Control Sample)	NA
Recoveries	NA
Surrogates	NA
MS/MSD/Duplicates	NA
Samples	NA
TCL Hits	NA
Spectra of TCL Hits	NA
Surrogates	NA
Internal Standards Criteria	NA
Library Searches	NA
Calculations & Correct Factors	NA
Dilutions Run	NA
Reruns	X
Manual Integrations	NA
Case Narrative	NA
Results Reporting/Data Qualifiers	X
KOBRA Workgroup Data	X
Check for Completeness	X
Primary Reviewer	CMS
Secondary Reviewer	MDA
Check for compliance with method and project specific requirements	X
Check the completeness of reported information	X
Check the information for the report narrative	X
Check the reasonableness of the results	X

Primary Reviewer:
13-DEC-2007

Secondary Reviewer:
17-DEC-2007

Generated: DEC-17-2007 13:38:04

00096074

KEMRON Environmental Services
Data Checklist

Date: 12-DEC-2007
Analyst: CMS
Analyst: NA
Method: 8260B
Instrument: HPMS6
Curve Workgroup: NA
Runlog ID: 19812
Analytical Workgroups: WG258140;WG258265

System Performance Check	X
BFB	X
Initial Calibration	X
Average RF	X
Linear Reg or Higher Order Curve	X
Second Source standard % Difference	X
Continuing Calibration /Check Standards	X
Project/Client Specific Requirements	X
Special Standards	X
Blanks	X
TCL's	X
Surrogates	X
LCS (Laboratory Control Sample)	X
Recoveries	X
Surrogates	X
MS/MSD/Duplicates	NA
Samples	X
TCL Hits	X
Spectra of TCL Hits	X
Surrogates	X
Internal Standards Criteria	X
Library Searches	NA
Calculations & Correct Factors	X
Dilutions Run	X
Reruns	X
Manual Integrations	NA
Case Narrative	X
Results Reporting/Data Qualifiers	X
KOBRA Workgroup Data	X
Check for Completeness	X
Primary Reviewer	CMS
Secondary Reviewer	MDA
Check for compliance with method and project specific requirements	X
Check the completeness of reported information	X
Check the information for the report narrative	X
Check the reasonableness of the results	X

Primary Reviewer:
13-DEC-2007

Secondary Reviewer:
14-DEC-2007

Generated: DEC-14-2007 14:26:00

KEMRON Environmental Services
HOLDING TIMES
EQUIVALENT TO AFCEE FORM 9

00096075

Analytical Method: 8260B AAB#: WG262326

Login Number: L08020032

Client ID	Date Collected	Date Received	Date Extracted	Max Hold Time Ext.	Time Held Ext.	Date Analyzed	Max Hold Time Anal	Time Held Anal.	Q
29WW39-020108	02/01/08	02/02/08	02/05/08	14	3.85	02/05/08	14	3.85	
29WW37-020108	02/01/08	02/02/08	02/05/08	14	3.95	02/05/08	14	3.95	

* EXT = SEE PROJECT QAPP REQUIREMENTS
*ANAL = SEE PROJECT QAPP REQUIREMENTS

KEMRON FORMS - Modified 11/20/2006
Version 1.5 PDF File ID: 1012415
Report generated 02/05/2008 15:15

KEMRON Environmental Services

SURROGATE STANDARDS

00096076

Login Number: L08020032
Instrument Id: HPMS6
Workgroup (AAB#): WG262326

Method: 8260
CAL ID: HPMS6-11-DEC-07
Matrix: Water

Sample Number	Dilution	Tag	1	2	3	4
L08020032-01	1.00	01	99.8	99.6	103	104
L08020032-02	1.00	01	98.6	100	102	104
WG262326-01	1.00	01	95.7	98.3	103	104
WG262326-02	1.00	01	92.6	99.4	101	102
WG262326-03	1.00	01	93.2	100	101	103

Surrogates	Surrogate Limits		
1 - 1,2-Dichloroethane-d4	80	-	120
2 - Dibromofluoromethane	86	-	118
3 - 4-Bromofluorobenzene	86	-	115
4 - Toluene-d8	88	-	110

Underline = Result out of surrogate limits

DL = surrogate diluted out
ND = surrogate not detected

KEMRON FORMS - Modified 09/27/2006
Version 1.5 PDF File ID: 1012424
Report generated 02/05/2008 15:15

METHOD BLANK SUMMARY

00096077

Login Number: L08020032
Work Group: WG262326
Blank File ID: 6M72727
Blank Sample ID: WG262326-01
Prep Date: 02/05/08 08:43
Instrument ID: HPMS6
Analyzed Date: 02/05/08 08:43
Method: 8260B
Analyst: CMS

This Method Blank Applies To The Following Samples:

Client ID	Lab Sample ID	Lab File ID	Time Analyzed	TAG
LCS	WG262326-02	6M72728	02/05/08 09:14	01
LCS2	WG262326-03	6M72729	02/05/08 09:46	01
29WW39-020108	L08020032-02	6M72733	02/05/08 11:54	01
29WW37-020108	L08020032-01	6M72734	02/05/08 12:26	01

KEMRON Environmental Services

METHOD BLANK REPORT

00096078

Login Number: L08020032 Prep Date: 02/05/08 08:43 Sample ID: WG262326-01
Instrument ID: HPMS6 Run Date: 02/05/08 08:43 Prep Method: 5030B
File ID: 6M72727 Analyst: CMS Method: 8260B
Workgroup (AAB#): WG262326 Matrix: Water Units: ug/L
Contract #: DACA56-94-D-0020 Cal ID: HPMS6-11-DEC-07

Analytes	SDL	PQL	Concentration	Dilution	Qualifier
Acetone	2.50	10.0	2.50	1	U
Benzene	0.125	1.00	0.125	1	U
Bromobenzene	0.125	1.00	0.125	1	U
Bromochloromethane	0.200	1.00	0.200	1	U
Bromodichloromethane	0.250	1.00	0.250	1	U
Bromoform	0.500	1.00	0.500	1	U
Bromomethane	0.500	1.00	0.500	1	U
2-Butanone	2.50	10.0	2.50	1	U
n-Butylbenzene	0.250	1.00	0.250	1	U
sec-Butylbenzene	0.250	1.00	0.250	1	U
tert-Butylbenzene	0.250	1.00	0.250	1	U
Carbon disulfide	0.500	1.00	0.500	1	U
Carbon tetrachloride	0.250	1.00	0.250	1	U
Chlorobenzene	0.125	1.00	0.125	1	U
Chlorodibromomethane	0.250	1.00	0.250	1	U
Chloroethane	0.500	1.00	0.500	1	U
2-Chloroethyl vinyl ether	2.00	10.0	2.00	1	U
Chloroform	0.125	1.00	0.125	1	U
Chloromethane	0.250	1.00	0.250	1	U
2-Chlorotoluene	0.125	1.00	0.125	1	U
4-Chlorotoluene	0.250	1.00	0.250	1	U
1,2-Dibromo-3-chloropropane	1.00	5.00	1.00	1	U
1,2-Dibromoethane	0.250	1.00	0.250	1	U
Dibromomethane	0.250	1.00	0.250	1	U
1,2-Dichlorobenzene	0.125	1.00	0.125	1	U
1,3-Dichlorobenzene	0.250	1.00	0.250	1	U
1,4-Dichlorobenzene	0.125	1.00	0.125	1	U
Dichlorodifluoromethane	0.250	1.00	0.250	1	U
1,1-Dichloroethane	0.125	1.00	0.125	1	U
1,2-Dichloroethane	0.250	1.00	0.250	1	U
1,1-Dichloroethene	0.500	1.00	0.500	1	U
cis-1,2-Dichloroethene	0.250	1.00	0.250	1	U
trans-1,2-Dichloroethene	0.250	1.00	0.250	1	U
1,2-Dichloropropane	0.200	1.00	0.200	1	U
1,3-Dichloropropane	0.200	1.00	0.200	1	U
2,2-Dichloropropane	0.250	1.00	0.250	1	U
cis-1,3-Dichloropropene	0.250	1.00	0.250	1	U
trans-1,3-Dichloropropene	0.500	1.00	0.500	1	U
1,1-Dichloropropene	0.250	1.00	0.250	1	U
Ethylbenzene	0.250	1.00	0.250	1	U
2-Hexanone	2.50	10.0	2.50	1	U
Hexachlorobutadiene	0.250	1.00	0.372	1	J

KEMRON FORMS - Modified 12/07/2006
Version 1.5 PDF File ID: 1012417
Report generated 02/05/2008 15:15

KEMRON Environmental Services

METHOD BLANK REPORT

00096079

Login Number: L08020032 Prep Date: 02/05/08 08:43 Sample ID: WG262326-01
Instrument ID: HPMS6 Run Date: 02/05/08 08:43 Prep Method: 5030B
File ID: 6M72727 Analyst: CMS Method: 8260B
Workgroup (AAB#): WG262326 Matrix: Water Units: ug/L
Contract #: DACA56-94-D-0020 Cal ID: HPMS6-11-DEC-07

Analytes	SDL	PQL	Concentration	Dilution	Qualifier
Isopropylbenzene	0.250	1.00	0.250	1	U
p-Isopropyltoluene	0.250	1.00	0.250	1	U
4-Methyl-2-pentanone	2.50	10.0	2.50	1	U
Methylene chloride	0.250	5.00	0.250	1	U
Naphthalene	0.200	1.00	0.318	1	J
n-Propylbenzene	0.125	1.00	0.125	1	U
Styrene	0.125	1.00	0.125	1	U
1,1,1,2-Tetrachloroethane	0.250	1.00	0.250	1	U
1,1,2,2-Tetrachloroethane	0.125	1.00	0.125	1	U
Tetrachloroethene	0.250	1.00	0.250	1	U
Toluene	0.250	1.00	0.250	1	U
1,2,3-Trichlorobenzene	0.125	1.00	0.465	1	J
1,2,4-Trichlorobenzene	0.200	1.00	0.322	1	J
1,1,1-Trichloroethane	0.250	1.00	0.250	1	U
1,1,2-Trichloroethane	0.250	1.00	0.250	1	U
Trichloroethene	0.250	1.00	0.250	1	U
Trichlorofluoromethane	0.250	1.00	0.250	1	U
1,2,3-Trichloropropane	0.500	1.00	0.500	1	U
1,2,4-Trimethylbenzene	0.250	1.00	0.250	1	U
1,3,5-Trimethylbenzene	0.250	1.00	0.250	1	U
Vinyl acetate	2.50	10.0	2.50	1	U
Vinyl chloride	0.250	1.00	0.250	1	U
o-Xylene	0.250	1.00	0.250	1	U
m-,p-Xylene	0.500	1.00	0.500	1	U

Surrogates	% Recovery	Surrogate Limits	Qualifier
Dibromofluoromethane	98.3	86 - 118	PASS
1,2-Dichloroethane-d4	95.7	80 - 120	PASS
Toluene-d8	104	88 - 110	PASS
4-Bromofluorobenzene	103	86 - 115	PASS

SDL Method Detection Limit
PQL Reporting/Practical Quantitation Limit
ND Analyte Not detected at or above reporting limit
* Analyte concentration > RL

KEMRON FORMS - Modified 12/07/2006
Version 1.5 PDF File ID: 1012417
Report generated 02/05/2008 15:15

KEMRON Environmental Services

LABORATORY CONTROL SAMPLE (LCS)

00096080

Login Number:L08020032 Analyst:CMS Prep Method:5030B
Instrument ID:HPMS6 Matrix:Water Method:8260B
Workgroup (AAB#):WG262326 Units:ug/L
QC Key:STD Lot #:STD24411

Sample ID:WG262326-02 LCS File ID:6M72728 Run Date:02/05/2008 09:14
Sample ID:WG262326-03 LCS2 File ID:6M72729 Run Date:02/05/2008 09:46

Analytes	LCS			LCS2			%RPD	%Rec Limits	RPD Lmt	Q
	Known	Found	% REC	Known	Found	% REC				
Acetone	20.0	18.4	91.8	20.0	18.1	90.6	1.32	40 - 142	20	
Benzene	20.0	19.7	98.4	20.0	20.9	104	5.96	80 - 121	20	
Bromobenzene	20.0	20.7	104	20.0	22.2	111	6.64	80 - 120	20	
Bromochloromethane	20.0	20.9	104	20.0	21.7	109	4.14	65 - 130	20	
Bromodichloromethane	20.0	23.5	118	20.0	24.3	122	3.25	80 - 131	20	
Bromoform	20.0	21.0	105	20.0	21.9	109	3.89	70 - 130	20	
Bromomethane	20.0	20.8	104	20.0	22.3	112	6.93	30 - 145	20	
2-Butanone	20.0	15.5	77.5	20.0	16.5	82.5	6.21	30 - 150	20	
n-Butylbenzene	20.0	20.1	100	20.0	21.4	107	6.39	80 - 131	20	
sec-Butylbenzene	20.0	20.1	100	20.0	21.3	106	5.89	80 - 127	20	
tert-Butylbenzene	20.0	19.1	95.3	20.0	20.5	103	7.33	80 - 126	20	
Carbon disulfide	20.0	20.9	105	20.0	22.3	112	6.56	58 - 138	20	
Carbon tetrachloride	20.0	21.5	107	20.0	22.8	114	6.24	65 - 140	20	
Chlorobenzene	20.0	19.5	97.4	20.0	20.6	103	5.52	80 - 120	20	
Chlorodibromomethane	20.0	20.7	103	20.0	21.5	108	4.13	60 - 135	20	
Chloroethane	20.0	19.0	95.2	20.0	20.3	101	6.22	60 - 135	20	
2-Chloroethyl vinyl ether	20.0	18.0	90.0	20.0	18.9	94.4	4.71	58 - 151	20	
Chloroform	20.0	20.8	104	20.0	21.7	109	4.59	80 - 125	20	
Chloromethane	20.0	20.3	101	20.0	21.7	108	6.65	40 - 125	20	
2-Chlorotoluene	20.0	19.2	96.2	20.0	21.4	107	10.7	80 - 127	20	
4-Chlorotoluene	20.0	21.0	105	20.0	20.9	104	0.671	80 - 126	20	
1,2-Dibromo-3-chloropropane	20.0	19.8	98.9	20.0	21.0	105	5.91	50 - 130	20	
1,2-Dibromoethane	20.0	20.4	102	20.0	21.0	105	2.75	80 - 125	20	
Dibromomethane	20.0	21.8	109	20.0	22.5	112	3.20	75 - 125	20	
1,2-Dichlorobenzene	20.0	19.4	97.1	20.0	20.3	102	4.65	80 - 125	20	
1,3-Dichlorobenzene	20.0	20.0	99.9	20.0	21.1	106	5.51	80 - 120	20	
1,4-Dichlorobenzene	20.0	18.9	94.3	20.0	19.9	99.3	5.21	80 - 120	20	
Dichlorodifluoromethane	20.0	25.3	127	20.0	27.1	136	6.72	50 - 133	20	*
1,1-Dichloroethane	20.0	19.3	96.6	20.0	20.5	102	5.75	80 - 125	20	
1,2-Dichloroethane	20.0	19.8	99.2	20.0	20.6	103	3.67	80 - 129	20	
1,1-Dichloroethene	20.0	19.4	97.2	20.0	21.2	106	8.75	80 - 132	20	
cis-1,2-Dichloroethene	20.0	20.7	104	20.0	22.0	110	6.18	70 - 125	20	
trans-1,2-Dichloroethene	20.0	19.3	96.4	20.0	20.9	104	7.85	80 - 127	20	
1,2-Dichloropropane	20.0	19.3	96.5	20.0	20.2	101	4.48	80 - 120	20	
1,3-Dichloropropane	20.0	20.0	99.9	20.0	20.8	104	4.13	80 - 120	20	
2,2-Dichloropropane	20.0	20.8	104	20.0	21.9	109	5.07	80 - 133	20	
cis-1,3-Dichloropropene	20.0	20.0	100	20.0	20.7	103	3.34	70 - 130	20	
trans-1,3-Dichloropropene	20.0	19.3	96.4	20.0	20.0	100	3.95	80 - 130	20	
1,1-Dichloropropene	20.0	19.7	98.3	20.0	21.5	107	8.77	75 - 130	20	
Ethylbenzene	20.0	20.0	100	20.0	21.3	107	6.34	80 - 122	20	

KEMRON FORMS - Modified 02/08/2007
Version 1.5 PDF File ID:1012418
Report generated 02/05/2008 15:15

KEMRON Environmental Services

LABORATORY CONTROL SAMPLE (LCS)

00096081

Login Number:L08020032 Analyst:CMS Prep Method:5030B
Instrument ID:HPMS6 Matrix:Water Method:8260B
Workgroup (AAB#):WG262326 Units:ug/L
QC Key:STD Lot #:STD24411

Sample ID:WG262326-02 LCS File ID:6M72728 Run Date:02/05/2008 09:14
Sample ID:WG262326-03 LCS2 File ID:6M72729 Run Date:02/05/2008 09:46

Analytes	LCS			LCS2			%RPD	%Rec Limits	RPD Lmt	Q
	Known	Found	% REC	Known	Found	% REC				
2-Hexanone	20.0	15.8	79.2	20.0	17.8	88.9	11.5	55 - 130	20	
Hexachlorobutadiene	20.0	17.4	86.9	20.0	18.5	92.7	6.51	72 - 132	20	
Isopropylbenzene	20.0	18.6	92.9	20.0	19.8	99.0	6.38	80 - 122	20	
p-Isopropyltoluene	20.0	19.1	95.3	20.0	20.0	100	5.01	80 - 122	20	
4-Methyl-2-pentanone	20.0	18.1	90.3	20.0	18.1	90.6	0.366	64 - 140	20	
Methylene chloride	20.0	19.2	96.1	20.0	20.2	101	5.12	80 - 123	20	
Naphthalene	20.0	17.5	87.5	20.0	18.4	91.8	4.80	59 - 149	20	
n-Propylbenzene	20.0	20.5	103	20.0	21.8	109	5.92	80 - 129	20	
Styrene	20.0	20.3	101	20.0	21.1	105	3.97	80 - 123	20	
1,1,1,2-Tetrachloroethane	20.0	22.5	113	20.0	23.7	118	4.91	80 - 130	20	
1,1,2,2-Tetrachloroethane	20.0	20.6	103	20.0	21.5	107	4.19	79 - 125	20	
Tetrachloroethene	20.0	21.2	106	20.0	22.5	112	5.62	80 - 124	20	
Toluene	20.0	20.3	102	20.0	21.7	109	6.77	80 - 124	20	
1,2,3-Trichlorobenzene	20.0	17.5	87.6	20.0	18.3	91.6	4.54	55 - 140	20	
1,2,4-Trichlorobenzene	20.0	18.3	91.7	20.0	19.2	95.9	4.49	65 - 135	20	
1,1,1-Trichloroethane	20.0	22.0	110	20.0	23.7	118	7.07	80 - 134	20	
1,1,2-Trichloroethane	20.0	20.8	104	20.0	21.3	107	2.58	80 - 125	20	
Trichloroethene	20.0	20.1	100	20.0	21.3	107	6.20	80 - 122	20	
Trichlorofluoromethane	20.0	17.3	86.6	20.0	18.5	92.5	6.61	62 - 151	20	
1,2,3-Trichloropropane	20.0	20.6	103	20.0	21.7	109	5.27	75 - 125	20	
1,2,4-Trimethylbenzene	20.0	20.3	102	20.0	21.3	107	4.92	80 - 125	20	
1,3,5-Trimethylbenzene	20.0	20.2	101	20.0	21.3	106	5.24	80 - 127	20	
Vinyl acetate	20.0	19.3	96.4	20.0	20.0	100	3.78	10 - 150	20	
Vinyl chloride	20.0	23.7	119	20.0	24.9	125	4.84	65 - 140	20	
o-Xylene	20.0	19.6	97.8	20.0	20.7	104	5.92	80 - 122	20	
m-,p-Xylene	40.0	40.2	100	40.0	42.6	107	5.88	80 - 122	20	

Surogates	LCS	LCS2	Surrogate Limits	Qualifier
	% Recovery	% Recovery		
Dibromofluoromethane	99.4	100	86 - 118	PASS
1,2-Dichloroethane-d4	92.6	93.2	80 - 120	PASS
Toluene-d8	102	103	88 - 110	PASS
4-Bromofluorobenzene	101	101	86 - 115	PASS

* FAILS %REC LIMIT

FAILS RPD LIMIT

KEMRON FORMS - Modified 02/08/2007
Version 1.5 PDF File ID:1012418
Report generated 02/05/2008 15:15

KEMRON ENVIRONMENTAL SERVICES
ORGANIC INSTRUMENT CHECK

BFB

Login Number: L08020032 Tune ID: WG258140-01
Instrument: HPMS6 Run Date: 12/11/2007
Analyst: CMS Run Time: 09:24
Workgroup: WG258140 File ID: 6M71595
Cal ID: HPMS6-11-DEC-07

Target	Rel. to	Lower	Upper	Rel.	Raw	Result
50.0	95.0	15.0	40.0	19.2	8080	PASS
75.0	95.0	30.0	60.0	46.3	19450	PASS
95.0	95.0	100	100	100	41984	PASS
96.0	95.0	5.00	9.00	7.31	3070	PASS
173	174	0	2.00	0.326	108	PASS
174	95.0	50.0	100	79.0	33173	PASS
175	174	5.00	9.00	6.90	2288	PASS
176	174	95.0	101	98.0	32520	PASS
177	176	5.00	9.00	6.22	2024	PASS

This check relates to the following samples:

Lab ID	Client ID	Tag	Date Analyzed	Q
WG258140-02	STD	01	12/11/2007 09:50	
WG258140-03	STD	01	12/11/2007 10:23	
WG258140-04	STD	01	12/11/2007 10:55	
WG258140-05	STD	01	12/11/2007 11:29	
WG258140-06	STD	01	12/11/2007 12:02	
WG258140-07	STD	01	12/11/2007 12:34	
WG258140-08	STD-CCV	01	12/11/2007 13:09	
WG258140-09	STD	01	12/11/2007 13:43	
WG258140-10	STD	01	12/11/2007 14:16	
WG258140-11	STD	01	12/11/2007 14:48	

* Sample past 12 hour tune limit

KEMRON FORMS - Modified 03/12/2007
Version 1.3 PDF File ID: 1012421
Report generated 02/05/2008 15:15

KEMRON ENVIRONMENTAL SERVICES
ORGANIC INSTRUMENT CHECK

BFB

Login Number: L08020032
Instrument: HPMS6
Analyst: CMS
Workgroup: WG258264

Tune ID: WG258264-01
Run Date: 12/12/2007
Run Time: 09:56
File ID: 6M71617
Cal ID: HPMS6-11-DEC-07

Target	Rel. to	Lower	Upper	Rel.	Raw	Result
50.0	95.0	15.0	40.0	19.7	4855	PASS
75.0	95.0	30.0	60.0	46.8	11566	PASS
95.0	95.0	100	100	100	24696	PASS
96.0	95.0	5.00	9.00	7.55	1864	PASS
173	174	0	2.00	0	0	PASS
174	95.0	50.0	100	77.7	19197	PASS
175	174	5.00	9.00	7.27	1396	PASS
176	174	95.0	101	98.1	18831	PASS
177	176	5.00	9.00	6.31	1189	PASS

This check relates to the following samples:

Lab ID	Client ID	Tag	Date Analyzed	Q
WG258140-12	SSCV	01	12/12/2007 11:56	

* Sample past 12 hour tune limit

KEMRON FORMS - Modified 03/12/2007
Version 1.3 PDF File ID: 1012421
Report generated 02/05/2008 15:15

KEMRON ENVIRONMENTAL SERVICES
ORGANIC INSTRUMENT CHECK

BFB

Login Number: L08020032 Tune ID: WG262325-01
Instrument: HPMS6 Run Date: 02/05/2008
Analyst: CMS Run Time: 06:37
Workgroup: WG262325 File ID: 6M72723
Cal ID: HPMS6-11-DEC-07

Target	Rel. to	Lower	Upper	Rel.	Raw	Result
50.0	95.0	15.0	40.0	19.7	7329	PASS
75.0	95.0	30.0	60.0	45.8	17072	PASS
95.0	95.0	100	100	100	37280	PASS
96.0	95.0	5.00	9.00	7.14	2661	PASS
173	174	0	2.00	0.657	193	PASS
174	95.0	50.0	100	78.8	29378	PASS
175	174	5.00	9.00	7.16	2102	PASS
176	174	95.0	101	96.3	28301	PASS
177	176	5.00	9.00	6.77	1917	PASS

This check relates to the following samples:

Lab ID	Client ID	Tag	Date Analyzed	Q
WG262326-01	BLANK	01	02/05/2008 08:43	
WG262326-02	LCS	01	02/05/2008 09:14	
WG262326-03	LCS2	01	02/05/2008 09:46	
L08020032-02	29WW39-020108	01	02/05/2008 11:54	
L08020032-01	29WW37-020108	01	02/05/2008 12:26	

* Sample past 12 hour tune limit

KEMRON FORMS - Modified 03/12/2007
Version 1.3 PDF File ID: 1012421
Report generated 02/05/2008 15:15

KEMRON Environmental Services

INITIAL CALIBRATION SUMMARY

00096085

Login Number: L08020032 **Instrument ID:** HPMS6

Analytical Method: 8260B **Initial Calibration Date:** 11-DEC-07 14:48

ICAL Workgroup: WG258140 **Column ID:** F

Analyte		AVG RF	% RSD	LINEAR (R)	QUAD(R^2)
1,1-Dichloroethene	CCC	0.3147	9.39		
1,2-Dichloropropane	CCC	0.1991	6.38		
Chloroform	CCC	0.4034	5.77		
Ethylbenzene	CCC	0.4468	8.35		
Toluene	CCC	1.170	8.34		
Vinyl Chloride	CCC	0.1551	17.8		1.00
1,1,2,2-Tetrachloroethane	SPCC	0.3344	4.87		
1,1-Dichloroethane	SPCC	0.4014	7.91		
Bromoform	SPCC	0.1213	28.1	0.999	
Chlorobenzene	SPCC	0.8398	8.32		
Chloromethane	SPCC	0.2055	6.85		
1,1,1,2-Tetrachloroethane		0.2693	11.5		
1,1,1-Trichloroethane		0.3459	10.7		
1,1,2-Trichloroethane		0.1872	3.47		
1,1-Dichloropropene		0.2926	10.3		
1,2,3-Trichlorobenzene		0.6424	11.4		
1,2,3-Trichloropropane		0.1081	7.86		
1,2,4-Trichlorobenzene		0.7847	10.1		
1,2,4-Trimethylbenzene		2.200	7.59		
1,2-Dibromo-3-Chloropropane		0.05552	14.4		
1,2-Dibromoethane		0.1904	4.68		
1,2-Dichlorobenzene		1.168	10.2		
1,2-Dichloroethane		0.2651	3.95		
1,3,5-Trimethylbenzene		2.076	7.92		
1,3-Dichlorobenzene		1.282	6.08		
1,3-Dichloropropane		0.3340	3.73		
1,4-Dichlorobenzene		1.376	12.4		
2,2-Dichloropropane		0.3408	12.6		
2-Butanone		0.04477	2.91		
2-Chloroethyl Vinyl Ether		0.08636	12.4		
2-Chlorotoluene		1.874	6.23		
2-Hexanone		0.09032	5.06		
4-Chlorotoluene		1.789	8.03		
4-Methyl-2-Pentanone		0.04007	5.97		
Acetone		0.03092	7.44		
Benzene		0.8377	7.66		
Bromobenzene		0.6123	4.86		
Bromochloromethane		0.1271	8.70		
Bromodichloromethane		0.2591	12.2		
Bromomethane		0.1825	4.60		
Carbon Disulfide		0.6218	5.58		
Carbon Tetrachloride		0.2778	18.0	1.00	
Chloroethane		0.1634	6.39		
Dibromochloromethane		0.2171	19.3		1.00
Dibromomethane		0.09898	13.8		

KEMRON FORMS - Modified 01/18/2007
Version 1.5 PDF File ID: 1012419
Report generated 02/05/2008 15:15

KEMRON Environmental Services

INITIAL CALIBRATION SUMMARY

00096086

Login Number: L08020032 **Instrument ID:** HPMS6

Analytical Method: 8260B **Initial Calibration Date:** 11-DEC-07 14:48

ICAL Workgroup: WG258140 **Column ID:** F

Analyte		AVG RF	% RSD	LINEAR (R)	QUAD(R^2)
Dichlorodifluoromethane		0.2795	6.84		
Hexachlorobutadiene		0.4034	9.58		
Isopropylbenzene		1.339	8.77		
Methylene Chloride		0.3226	60.8		1.00
Naphthalene		1.253	10.0		
Styrene		0.9061	7.09		
Tetrachloroethene		0.3112	9.53		
Trichloroethene		0.2301	8.68		
Trichlorofluoromethane		0.4209	7.62		
Vinyl Acetate		0.2166	4.47		
cis-1,2-Dichloroethene		0.2342	7.16		
cis-1,3-Dichloropropene		0.3155	7.78		
m-,p-Xylene		0.5547	9.03		
n-Butylbenzene		2.118	9.22		
n-Propylbenzene		2.858	8.40		
o-Xylene		0.5504	7.75		
p-Isopropyltoluene		2.331	9.13		
sec-Butylbenzene		2.641	9.82		
tert-Butylbenzene		0.4788	8.48		
trans-1,2-Dichloroethene		0.2255	9.92		
trans-1,3-Dichloropropene		0.3529	9.46		

R = Correlation coefficient; 0.995 minimum
R^2 = Coefficient of determination; 0.99 minimum

KEMRON FORMS - Modified 01/18/2007
Version 1.5 PDF File ID: 1012419
Report generated 02/05/2008 15:15

INITIAL CALIBRATION DATA

00096087

Login Number: L08020032 **Instrument ID:** HPMS6

Analytical Method: 8260B **Initial Calibration Date:** 11-DEC-07 14:48

Column ID: F

Analyte	WG258140-02			WG258140-03			WG258140-04		
	CONC	RESP	RF	CONC	RESP	RF	CONC	RESP	RF
1,1-Dichloroethene	NA	NA	NA	0.400	4318.00000	0.3151	1.00	9541.00000	0.2807
1,2-Dichloropropane	NA	NA	NA	0.400	2592.00000	0.1892	1.00	6219.00000	0.1830
Chloroform	0.300	4273.00000	0.4004	0.400	5845.00000	0.4265	1.00	12830.0000	0.3775
Ethylbenzene	NA	NA	NA	0.400	4945.00000	0.4896	1.00	11122.0000	0.4435
Toluene	NA	NA	NA	0.400	13043.0000	1.291	1.00	29303.0000	1.169
Vinyl Chloride	NA	NA	NA	0.400	2768.00000	0.2020	1.00	6190.00000	0.1821
1,1,2,2-Tetrachloroethane	NA	NA	NA	0.400	1751.00000	0.3124	1.00	4558.00000	0.3259
1,1-Dichloroethane	NA	NA	NA	0.400	5922.00000	0.4322	1.00	12990.0000	0.3822
Bromoform	NA	NA	NA	NA	NA	NA	1.00	1903.00000	0.07590
Chlorobenzene	NA	NA	NA	0.400	9641.00000	0.9545	1.00	21122.0000	0.8423
Chloromethane	NA	NA	NA	0.400	3008.00000	0.2195	1.00	7240.00000	0.2130
1,1,1,2-Tetrachloroethane	NA	NA	NA	0.400	2549.00000	0.2524	1.00	5764.00000	0.2299
1,1,1-Trichloroethane	NA	NA	NA	0.400	4939.00000	0.3604	1.00	10310.0000	0.3033
1,1,2-Trichloroethane	NA	NA	NA	0.400	1871.00000	0.1852	1.00	4582.00000	0.1827
1,1-Dichloropropene	NA	NA	NA	0.400	4130.00000	0.3014	1.00	8498.00000	0.2500
1,2,3-Trichlorobenzene	NA	NA	NA	0.400	4203.00000	0.7498	1.00	9421.00000	0.6737
1,2,3-Trichloropropane	NA	NA	NA	NA	NA	NA	1.00	1303.00000	0.09320
1,2,4-Trichlorobenzene	NA	NA	NA	0.400	5121.00000	0.9135	1.00	11122.0000	0.7953
1,2,4-Trimethylbenzene	NA	NA	NA	0.400	13201.0000	2.355	1.00	31282.0000	2.237
1,2-Dibromo-3-Chloropropane	NA	NA	NA	NA	NA	NA	NA	NA	NA
1,2-Dibromoethane	NA	NA	NA	0.400	1929.00000	0.1910	1.00	4336.00000	0.1729
1,2-Dichlorobenzene	0.300	5777.00000	1.363	0.400	7525.00000	1.342	1.00	15849.0000	1.133
1,2-Dichloroethane	NA	NA	NA	0.400	3560.00000	0.2598	1.00	9148.00000	0.2691
1,3,5-Trimethylbenzene	NA	NA	NA	0.400	12473.0000	2.225	1.00	27954.0000	1.999
1,3-Dichlorobenzene	NA	NA	NA	0.400	7605.00000	1.357	1.00	17901.0000	1.280
1,3-Dichloropropane	NA	NA	NA	0.400	3279.00000	0.3246	1.00	8506.00000	0.3392
1,4-Dichlorobenzene	0.300	7406.00000	1.747	0.400	8405.00000	1.499	1.00	19139.0000	1.369
2,2-Dichloropropane	NA	NA	NA	0.400	4082.00000	0.2979	1.00	9721.00000	0.2860
2-Butanone	NA	NA	NA	NA	NA	NA	NA	NA	NA
2-Chloroethyl Vinyl Ether	NA	NA	NA	NA	NA	NA	1.00	2219.00000	0.06530
2-Chlorotoluene	NA	NA	NA	0.400	11473.0000	2.047	1.00	26415.0000	1.889
2-Hexanone	NA	NA	NA	NA	NA	NA	NA	NA	NA
4-Chlorotoluene	NA	NA	NA	0.400	11061.0000	1.973	1.00	24699.0000	1.766
4-Methyl-2-Pentanone	NA	NA	NA	NA	NA	NA	NA	NA	NA
Acetone	NA	NA	NA	NA	NA	NA	NA	NA	NA
Benzene	NA	NA	NA	0.400	12819.0000	0.9355	1.00	27564.0000	0.8110
Bromobenzene	0.300	2679.00000	0.6320	0.400	3436.00000	0.6130	1.00	8676.00000	0.6204
Bromochloromethane	NA	NA	NA	0.400	1421.00000	0.1037	1.00	4468.00000	0.1315
Bromodichloromethane	NA	NA	NA	0.400	3027.00000	0.2209	1.00	7736.00000	0.2276
Bromomethane	NA	NA	NA	0.400	2600.00000	0.1897	1.00	6428.00000	0.1891
Carbon Disulfide	NA	NA	NA	0.400	8296.00000	0.6054	1.00	20060.0000	0.5902
Carbon Tetrachloride	NA	NA	NA	0.400	3399.00000	0.2480	1.00	7429.00000	0.2186

KEMRON FORMS - Modified 10/13/2006
Version 1.6 PDF File ID: 1012419
Report generated 02/05/2008 15:15

INITIAL CALIBRATION DATA

00096088

Login Number: L08020032 **Instrument ID:** HPMS6

Analytical Method: 8260B **Initial Calibration Date:** 11-DEC-07 14:48

Column ID: F

Analyte	WG258140-05			WG258140-06			WG258140-07		
	CONC	RESP	RF	CONC	RESP	RF	CONC	RESP	RF
1,1-Dichloroethene	2.00	20793.0000	0.3127	5.00	44329.0000	0.2637	20.0	233359.000	0.3475
1,2-Dichloropropane	2.00	13745.0000	0.2067	5.00	30498.0000	0.1814	20.0	144121.000	0.2146
Chloroform	2.00	26489.0000	0.3984	5.00	60153.0000	0.3578	20.0	286593.000	0.4268
Ethylbenzene	2.00	22194.0000	0.4448	5.00	49622.0000	0.3926	20.0	247708.000	0.4944
Toluene	2.00	59334.0000	1.189	5.00	129976.000	1.028	20.0	638718.000	1.275
Vinyl Chloride	2.00	11292.0000	0.1698	5.00	23170.0000	0.1378	20.0	102099.000	0.1520
1,1,2,2-Tetrachloroethane	2.00	9351.00000	0.3334	5.00	23257.0000	0.3240	20.0	105851.000	0.3650
1,1-Dichloroethane	2.00	26326.0000	0.3960	5.00	56240.0000	0.3345	20.0	284300.000	0.4234
Bromoform	2.00	4483.00000	0.08980	5.00	11986.0000	0.09480	20.0	65748.0000	0.1312
Chlorobenzene	2.00	42422.0000	0.8501	5.00	94004.0000	0.7437	20.0	449837.000	0.8979
Chloromethane	2.00	14944.0000	0.2248	5.00	30541.0000	0.1817	20.0	140698.000	0.2095
1,1,1,2-Tetrachloroethane	2.00	12503.0000	0.2506	5.00	29885.0000	0.2364	20.0	154488.000	0.3084
1,1,1-Trichloroethane	2.00	22094.0000	0.3323	5.00	47230.0000	0.2809	20.0	258801.000	0.3854
1,1,2-Trichloroethane	2.00	9329.00000	0.1869	5.00	23110.0000	0.1828	20.0	101297.000	0.2022
1,1-Dichloropropene	2.00	18975.0000	0.2854	5.00	41313.0000	0.2458	20.0	219784.000	0.3273
1,2,3-Trichlorobenzene	2.00	19144.0000	0.6826	5.00	45507.0000	0.6340	20.0	200723.000	0.6922
1,2,3-Trichloropropane	2.00	2857.00000	0.1019	5.00	8046.00000	0.1121	20.0	34674.0000	0.1196
1,2,4-Trichlorobenzene	2.00	23030.0000	0.8211	5.00	52727.0000	0.7346	20.0	246339.000	0.8495
1,2,4-Trimethylbenzene	2.00	61956.0000	2.209	5.00	140428.000	1.957	20.0	701435.000	2.419
1,2-Dibromo-3-Chloropropane	2.00	1147.00000	0.04090	5.00	3777.00000	0.05260	20.0	18408.0000	0.06350
1,2-Dibromoethane	2.00	9409.00000	0.1886	5.00	23819.0000	0.1884	20.0	102450.000	0.2045
1,2-Dichlorobenzene	2.00	32194.0000	1.148	5.00	75024.0000	1.045	20.0	353391.000	1.219
1,2-Dichloroethane	2.00	18261.0000	0.2747	5.00	42362.0000	0.2520	20.0	188957.000	0.2814
1,3,5-Trimethylbenzene	2.00	58666.0000	2.092	5.00	130889.000	1.824	20.0	669236.000	2.308
1,3-Dichlorobenzene	2.00	36071.0000	1.286	5.00	83050.0000	1.157	20.0	402221.000	1.387
1,3-Dichloropropane	2.00	16697.0000	0.3346	5.00	41039.0000	0.3247	20.0	180665.000	0.3606
1,4-Dichlorobenzene	2.00	37986.0000	1.354	5.00	85930.0000	1.197	20.0	409479.000	1.412
2,2-Dichloropropane	2.00	23173.0000	0.3485	5.00	48491.0000	0.2885	20.0	257328.000	0.3832
2-Butanone	NA	NA	NA	5.00	7353.00000	0.04370	20.0	30500.0000	0.04540
2-Chloroethyl Vinyl Ether	2.00	5359.00000	0.08060	5.00	14461.0000	0.08600	20.0	62147.0000	0.09250
2-Chlorotoluene	2.00	53244.0000	1.898	5.00	120964.000	1.685	20.0	570476.000	1.967
2-Hexanone	NA	NA	NA	5.00	10750.0000	0.08500	20.0	47725.0000	0.09530
4-Chlorotoluene	2.00	50866.0000	1.814	5.00	111974.000	1.560	20.0	567680.000	1.958
4-Methyl-2-Pentanone	NA	NA	NA	5.00	6247.00000	0.03720	20.0	27806.0000	0.04140
Acetone	NA	NA	NA	5.00	5556.00000	0.03310	20.0	21546.0000	0.03210
Benzene	2.00	57042.0000	0.8580	5.00	121851.000	0.7248	20.0	594781.000	0.8857
Bromobenzene	2.00	17169.0000	0.6122	5.00	39296.0000	0.5475	20.0	190875.000	0.6582
Bromochloromethane	2.00	8612.00000	0.1295	5.00	20212.0000	0.1202	20.0	93498.0000	0.1392
Bromodichloromethane	2.00	16414.0000	0.2469	5.00	38010.0000	0.2261	20.0	192189.000	0.2862
Bromomethane	2.00	12211.0000	0.1837	5.00	27477.0000	0.1634	20.0	120774.000	0.1799
Carbon Disulfide	2.00	41636.0000	0.6262	5.00	98955.0000	0.5886	20.0	453958.000	0.6760
Carbon Tetrachloride	2.00	16235.0000	0.2442	5.00	36731.0000	0.2185	20.0	217782.000	0.3243

KEMRON FORMS - Modified 10/13/2006
Version 1.6 PDF File ID: 1012419
Report generated 02/05/2008 15:15

INITIAL CALIBRATION DATA

00096089

Login Number: L08020032 **Instrument ID:** HPMS6

Analytical Method: 8260B **Initial Calibration Date:** 11-DEC-07 14:48

Column ID: F

Analyte	WG258140-08			WG258140-09			WG258140-10		
	CONC	RESP	RF	CONC	RESP	RF	CONC	RESP	RF
1,1-Dichloroethene	50.0	588572.000	0.3452	100	1144549.00	0.3327	200	2316516.00	0.3197
1,2-Dichloropropane	50.0	354087.000	0.2077	100	714158.000	0.2076	200	1469825.00	0.2028
Chloroform	50.0	718557.000	0.4214	100	1427538.00	0.4149	200	2950035.00	0.4071
Ethylbenzene	50.0	601852.000	0.4694	100	1173981.00	0.4393	200	2322523.00	0.4007
Toluene	50.0	1571755.00	1.226	100	3058981.00	1.145	200	6031740.00	1.041
Vinyl Chloride	50.0	246939.000	0.1448	100	459454.000	0.1335	200	858916.000	0.1185
1,1,2,2-Tetrachloroethane	50.0	260970.000	0.3418	100	574163.000	0.3460	200	1108486.00	0.3263
1,1-Dichloroethane	50.0	724530.000	0.4249	100	1430189.00	0.4157	200	2916986.00	0.4026
Bromoform	50.0	181620.000	0.1417	100	430071.000	0.1609	200	898390.000	0.1550
Chlorobenzene	50.0	1100937.00	0.8587	100	2185616.00	0.8178	200	4367891.00	0.7536
Chloromethane	50.0	345282.000	0.2025	100	669772.000	0.1947	200	1435953.00	0.1982
1,1,1,2-Tetrachloroethane	50.0	384824.000	0.3002	100	796068.000	0.2979	200	1615131.00	0.2787
1,1,1-Trichloroethane	50.0	642178.000	0.3766	100	1269986.00	0.3691	200	2602521.00	0.3592
1,1,2-Trichloroethane	50.0	239820.000	0.1871	100	503900.000	0.1885	200	1055723.00	0.1821
1,1-Dichloropropene	50.0	541708.000	0.3177	100	1066950.00	0.3101	200	2197936.00	0.3033
1,2,3-Trichlorobenzene	50.0	469102.000	0.6144	100	949949.000	0.5725	200	1765539.00	0.5197
1,2,3-Trichloropropane	50.0	83204.0000	0.1090	100	187387.000	0.1129	200	367993.000	0.1083
1,2,4-Trichlorobenzene	50.0	598367.000	0.7837	100	1192196.00	0.7185	200	2246156.00	0.6612
1,2,4-Trimethylbenzene	50.0	1763174.00	2.309	100	3531584.00	2.128	200	6751050.00	1.987
1,2-Dibromo-3-Chloropropane	50.0	45326.0000	0.05940	100	98406.0000	0.05930	200	194855.000	0.05740
1,2-Dibromoethane	50.0	247868.000	0.1933	100	524231.000	0.1961	200	1092590.00	0.1885
1,2-Dichlorobenzene	50.0	876761.000	1.148	100	1808745.00	1.090	200	3482201.00	1.025
1,2-Dichloroethane	50.0	454799.000	0.2667	100	914928.000	0.2659	200	1820863.00	0.2513
1,3,5-Trimethylbenzene	50.0	1689693.00	2.213	100	3354498.00	2.022	200	6553352.00	1.929
1,3-Dichlorobenzene	50.0	1016005.00	1.331	100	2100374.00	1.266	200	4056478.00	1.194
1,3-Dichloropropane	50.0	426797.000	0.3329	100	893328.000	0.3343	200	1859356.00	0.3208
1,4-Dichlorobenzene	50.0	1021787.00	1.338	100	2118577.00	1.277	200	4041495.00	1.190
2,2-Dichloropropane	50.0	647976.000	0.3800	100	1293934.00	0.3761	200	2654557.00	0.3663
2-Butanone	50.0	75306.0000	0.04420	100	160037.000	0.04650	200	330981.000	0.04570
2-Chloroethyl Vinyl Ether	50.0	153179.000	0.08980	100	327262.000	0.09510	200	690059.000	0.09520
2-Chlorotoluene	50.0	1470752.00	1.926	100	3039029.00	1.832	200	5937246.00	1.748
2-Hexanone	50.0	111774.000	0.08720	100	257542.000	0.09640	200	509678.000	0.08790
4-Chlorotoluene	50.0	1425888.00	1.867	100	2838569.00	1.711	200	5646685.00	1.662
4-Methyl-2-Pentanone	50.0	65786.0000	0.03860	100	147265.000	0.04280	200	306416.000	0.04230
Acetone	50.0	53664.0000	0.03150	100	110627.000	0.03220	200	216962.000	0.02990
Benzene	50.0	1469473.00	0.8618	100	2880420.00	0.8372	200	5706567.00	0.7875
Bromobenzene	50.0	475188.000	0.6223	100	995736.000	0.6001	200	2053872.00	0.6046
Bromochloromethane	50.0	229697.000	0.1347	100	455145.000	0.1323	200	908088.000	0.1253
Bromodichloromethane	50.0	482644.000	0.2831	100	1000601.00	0.2908	200	2111408.00	0.2914
Bromomethane	50.0	316504.000	0.1856	100	641351.000	0.1864	200	1317698.00	0.1818
Carbon Disulfide	50.0	1132867.00	0.6644	100	2184073.00	0.6348	200	4263886.00	0.5884
Carbon Tetrachloride	50.0	560188.000	0.3285	100	1113583.00	0.3237	200	2296662.00	0.3169

KEMRON FORMS - Modified 10/13/2006
Version 1.6 PDF File ID: 1012419
Report generated 02/05/2008 15:15

INITIAL CALIBRATION DATA

00096090

Login Number:L08020032
Instrument ID:HPMS6
Analytical Method:8260B
Initial Calibration Date:11-DEC-07 14:48
Column ID:F

Analyte	WG258140-11		
	CONC	RESP	RF
1,1-Dichloroethene	NA	NA	NA
1,2-Dichloropropane	NA	NA	NA
Chloroform	NA	NA	NA
Ethylbenzene	NA	NA	NA
Toluene	NA	NA	NA
Vinyl Chloride	NA	NA	NA
1,1,2,2-Tetrachloroethane	NA	NA	NA
1,1-Dichloroethane	NA	NA	NA
Bromoform	NA	NA	NA
Chlorobenzene	NA	NA	NA
Chloromethane	NA	NA	NA
1,1,1,2-Tetrachloroethane	NA	NA	NA
1,1,1-Trichloroethane	NA	NA	NA
1,1,2-Trichloroethane	NA	NA	NA
1,1-Dichloropropene	NA	NA	NA
1,2,3-Trichlorobenzene	NA	NA	NA
1,2,3-Trichloropropane	NA	NA	NA
1,2,4-Trichlorobenzene	NA	NA	NA
1,2,4-Trimethylbenzene	NA	NA	NA
1,2-Dibromo-3-Chloropropane	NA	NA	NA
1,2-Dibromoethane	NA	NA	NA
1,2-Dichlorobenzene	NA	NA	NA
1,2-Dichloroethane	NA	NA	NA
1,3,5-Trimethylbenzene	NA	NA	NA
1,3-Dichlorobenzene	NA	NA	NA
1,3-Dichloropropane	NA	NA	NA
1,4-Dichlorobenzene	NA	NA	NA
2,2-Dichloropropane	NA	NA	NA
2-Butanone	300	457519.000	0.04310
2-Chloroethyl Vinyl Ether	NA	NA	NA
2-Chlorotoluene	NA	NA	NA
2-Hexanone	300	718025.000	0.09010
4-Chlorotoluene	NA	NA	NA
4-Methyl-2-Pentanone	300	404677.000	0.03810
Acetone	300	283471.000	0.02670
Benzene	NA	NA	NA
Bromobenzene	NA	NA	NA
Bromochloromethane	NA	NA	NA
Bromodichloromethane	NA	NA	NA
Bromomethane	NA	NA	NA
Carbon Disulfide	NA	NA	NA
Carbon Tetrachloride	NA	NA	NA

INITIAL CALIBRATION DATA

00096091

Login Number: L08020032 **Instrument ID:** HPMS6

Analytical Method: 8260B **Initial Calibration Date:** 11-DEC-07 14:48

Column ID: F

Analyte	WG258140-02			WG258140-03			WG258140-04		
	CONC	RESP	RF	CONC	RESP	RF	CONC	RESP	RF
Chloroethane	NA	NA	NA	NA	NA	NA	1.00	5661.00000	0.1666
Dibromochloromethane	NA	NA	NA	0.400	1723.00000	0.1706	1.00	4292.00000	0.1712
Dibromomethane	NA	NA	NA	0.400	925.000000	0.06750	1.00	3229.00000	0.09500
Dichlorodifluoromethane	NA	NA	NA	NA	NA	NA	1.00	10186.0000	0.2997
Hexachlorobutadiene	NA	NA	NA	0.400	2405.00000	0.4290	1.00	5166.00000	0.3694
Isopropylbenzene	NA	NA	NA	0.400	14202.0000	1.406	1.00	31034.0000	1.238
Methylene Chloride	NA	NA	NA	0.400	10520.0000	0.7677	1.00	14534.0000	0.4276
Naphthalene	NA	NA	NA	0.400	8086.00000	1.443	1.00	17395.0000	1.244
Styrene	NA	NA	NA	0.400	9096.00000	0.9005	1.00	21596.0000	0.8612
Tetrachloroethene	NA	NA	NA	0.400	3439.00000	0.3405	1.00	7440.00000	0.2967
Trichloroethene	NA	NA	NA	0.400	3117.00000	0.2275	1.00	7083.00000	0.2084
Trichlorofluoromethane	NA	NA	NA	0.400	5152.00000	0.3760	1.00	14539.0000	0.4278
Vinyl Acetate	NA	NA	NA	NA	NA	NA	NA	NA	NA
cis-1,2-Dichloroethene	NA	NA	NA	0.400	3040.00000	0.2218	1.00	7512.00000	0.2210
cis-1,3-Dichloropropene	NA	NA	NA	0.400	4150.00000	0.3028	1.00	9874.00000	0.2905
m-,p-Xylene	NA	NA	NA	0.800	12332.0000	0.6104	2.00	27909.0000	0.5565
n-Butylbenzene	NA	NA	NA	0.400	12547.0000	2.238	1.00	27765.0000	1.986
n-Propylbenzene	NA	NA	NA	0.400	17278.0000	3.082	1.00	38638.0000	2.763
o-Xylene	NA	NA	NA	0.400	6067.00000	0.6006	1.00	13510.0000	0.5388
p-Isopropyltoluene	NA	NA	NA	0.400	14071.0000	2.510	1.00	30504.0000	2.181
sec-Butylbenzene	NA	NA	NA	0.400	16332.0000	2.914	1.00	33395.0000	2.388
tert-Butylbenzene	NA	NA	NA	0.400	2876.00000	0.5131	1.00	6110.00000	0.4369
trans-1,2-Dichloroethene	NA	NA	NA	0.400	3486.00000	0.2544	1.00	6699.00000	0.1971
trans-1,3-Dichloropropene	NA	NA	NA	0.400	3394.00000	0.3360	1.00	7552.00000	0.3012

INITIAL CALIBRATION DATA

00096092

Login Number: L08020032 **Instrument ID:** HPMS6

Analytical Method: 8260B **Initial Calibration Date:** 11-DEC-07 14:48

Column ID: F

Analyte	WG258140-05			WG258140-06			WG258140-07		
	CONC	RESP	RF	CONC	RESP	RF	CONC	RESP	RF
Chloroethane	2.00	10782.0000	0.1622	5.00	23606.0000	0.1404	20.0	112493.000	0.1675
Dibromochloromethane	2.00	9163.00000	0.1836	5.00	23910.0000	0.1892	20.0	123613.000	0.2467
Dibromomethane	2.00	6624.00000	0.09960	5.00	17156.0000	0.1021	20.0	74793.0000	0.1114
Dichlorodifluoromethane	2.00	19670.0000	0.2959	5.00	41712.0000	0.2481	20.0	198954.000	0.2963
Hexachlorobutadiene	2.00	11421.0000	0.4072	5.00	24385.0000	0.3397	20.0	133599.000	0.4607
Isopropylbenzene	2.00	66811.0000	1.339	5.00	144433.000	1.143	20.0	747564.000	1.492
Methylene Chloride	2.00	21217.0000	0.3191	5.00	38371.0000	0.2283	20.0	147621.000	0.2198
Naphthalene	2.00	36261.0000	1.293	5.00	89694.0000	1.250	20.0	401377.000	1.384
Styrene	2.00	44468.0000	0.8911	5.00	102151.000	0.8081	20.0	502986.000	1.004
Tetrachloroethene	2.00	15187.0000	0.3043	5.00	32257.0000	0.2552	20.0	173503.000	0.3463
Trichloroethene	2.00	16013.0000	0.2409	5.00	32315.0000	0.1922	20.0	167595.000	0.2496
Trichlorofluoromethane	2.00	29553.0000	0.4445	5.00	61438.0000	0.3655	20.0	301477.000	0.4490
Vinyl Acetate	2.00	13188.0000	0.1984	5.00	37132.0000	0.2209	20.0	151283.000	0.2253
cis-1,2-Dichloroethene	2.00	15357.0000	0.2310	5.00	34846.0000	0.2073	20.0	170774.000	0.2543
cis-1,3-Dichloropropene	2.00	19738.0000	0.2969	5.00	47611.0000	0.2832	20.0	231639.000	0.3450
m-,p-Xylene	4.00	56030.0000	0.5614	10.0	124614.000	0.4929	40.0	616572.000	0.6153
n-Butylbenzene	2.00	60092.0000	2.143	5.00	129795.000	1.808	20.0	693651.000	2.392
n-Propylbenzene	2.00	82124.0000	2.928	5.00	179860.000	2.506	20.0	924825.000	3.189
o-Xylene	2.00	27105.0000	0.5432	5.00	61079.0000	0.4832	20.0	302579.000	0.6040
p-Isopropyltoluene	2.00	64328.0000	2.294	5.00	143912.000	2.005	20.0	761342.000	2.626
sec-Butylbenzene	2.00	74229.0000	2.647	5.00	162475.000	2.264	20.0	864134.000	2.980
tert-Butylbenzene	2.00	13427.0000	0.4787	5.00	29121.0000	0.4057	20.0	152303.000	0.5252
trans-1,2-Dichloroethene	2.00	14830.0000	0.2231	5.00	31813.0000	0.1892	20.0	160999.000	0.2398
trans-1,3-Dichloropropene	2.00	16579.0000	0.3322	5.00	41375.0000	0.3273	20.0	199307.000	0.3978

INITIAL CALIBRATION DATA

00096093

Login Number: L08020032 **Instrument ID:** HPMS6

Analytical Method: 8260B **Initial Calibration Date:** 11-DEC-07 14:48

Column ID: F

Analyte	WG258140-08			WG258140-09			WG258140-10		
	CONC	RESP	RF	CONC	RESP	RF	CONC	RESP	RF
Chloroethane	50.0	287544.000	0.1686	100	582366.000	0.1693	200	1226976.00	0.1693
Dibromochloromethane	50.0	321330.000	0.2506	100	704750.000	0.2637	200	1515277.00	0.2614
Dibromomethane	50.0	179931.000	0.1055	100	370169.000	0.1076	200	747402.000	0.1031
Dichlorodifluoromethane	50.0	477616.000	0.2801	100	925591.000	0.2690	200	1939484.00	0.2677
Hexachlorobutadiene	50.0	330478.000	0.4328	100	672593.000	0.4053	200	1300118.00	0.3827
Isopropylbenzene	50.0	1864350.00	1.454	100	3680947.00	1.377	200	7345119.00	1.267
Methylene Chloride	50.0	367478.000	0.2155	100	711085.000	0.2067	200	1421799.00	0.1962
Naphthalene	50.0	931739.000	1.220	100	1910889.00	1.152	200	3538623.00	1.042
Styrene	50.0	1248094.00	0.9735	100	2519913.00	0.9429	200	5026206.00	0.8672
Tetrachloroethene	50.0	427600.000	0.3335	100	840009.000	0.3143	200	1730200.00	0.2985
Trichloroethene	50.0	417282.000	0.2447	100	833454.000	0.2422	200	1703115.00	0.2350
Trichlorofluoromethane	50.0	757390.000	0.4442	100	1488242.00	0.4326	200	3095726.00	0.4272
Vinyl Acetate	50.0	368954.000	0.2164	100	767506.000	0.2231	200	1562419.00	0.2156
cis-1,2-Dichloroethene	50.0	430039.000	0.2522	100	847798.000	0.2464	200	1737390.00	0.2398
cis-1,3-Dichloropropene	50.0	569610.000	0.3341	100	1163528.00	0.3382	200	2414519.00	0.3332
m-,p-Xylene	100	1499849.00	0.5849	200	2871232.00	0.5372	400	5554474.00	0.4792
n-Butylbenzene	50.0	1759252.00	2.304	100	3527443.00	2.126	200	6619809.00	1.949
n-Propylbenzene	50.0	2315444.00	3.032	100	4581905.00	2.761	200	8837594.00	2.601
o-Xylene	50.0	742313.000	0.5790	100	1461851.00	0.5470	200	2942931.00	0.5077
p-Isopropyltoluene	50.0	1933236.00	2.532	100	3879185.00	2.338	200	7354093.00	2.165
sec-Butylbenzene	50.0	2173686.00	2.847	100	4363500.00	2.630	200	8357624.00	2.460
tert-Butylbenzene	50.0	390791.000	0.5118	100	800130.000	0.4822	200	1618862.00	0.4765
trans-1,2-Dichloroethene	50.0	412757.000	0.2421	100	803074.000	0.2334	200	1629482.00	0.2249
trans-1,3-Dichloropropene	50.0	485059.000	0.3783	100	1020737.00	0.3819	200	2136081.00	0.3685

KEMRON FORMS - Modified 10/13/2006
Version 1.6 PDF File ID: 1012419
Report generated 02/05/2008 15:15

INITIAL CALIBRATION DATA

00096094

Login Number: L08020032
Analytical Method: 8260B

Instrument ID: HPMS6
Initial Calibration Date: 11-DEC-07 14:48
Column ID: F

Analyte	WG258140-11		
	CONC	RESP	RF
Chloroethane	NA	NA	NA
Dibromochloromethane	NA	NA	NA
Dibromomethane	NA	NA	NA
Dichlorodifluoromethane	NA	NA	NA
Hexachlorobutadiene	NA	NA	NA
Isopropylbenzene	NA	NA	NA
Methylene Chloride	NA	NA	NA
Naphthalene	NA	NA	NA
Styrene	NA	NA	NA
Tetrachloroethene	NA	NA	NA
Trichloroethene	NA	NA	NA
Trichlorofluoromethane	NA	NA	NA
Vinyl Acetate	NA	NA	NA
cis-1,2-Dichloroethene	NA	NA	NA
cis-1,3-Dichloropropene	NA	NA	NA
m-,p-Xylene	NA	NA	NA
n-Butylbenzene	NA	NA	NA
n-Propylbenzene	NA	NA	NA
o-Xylene	NA	NA	NA
p-Isopropyltoluene	NA	NA	NA
sec-Butylbenzene	NA	NA	NA
tert-Butylbenzene	NA	NA	NA
trans-1,2-Dichloroethene	NA	NA	NA
trans-1,3-Dichloropropene	NA	NA	NA

KEMRON Environmental Services

ALTERNATE SOURCE CALIBRATION REPORT

00096095

Login Number:L08020032 Run Date:12/12/2007 Sample ID:WG258140-12

Instrument ID:HPMS6 Run Time:11:56 Method:8260B

File ID:6M71621 Analyst:CMS QC Key:STD

ICal Workgroup:WG258140 Cal ID: HPMS6 - 11-DEC-07

Analyte		Expected	Found	Units	RF	%D	UCL	Q
Chloroform	CCC	20.0	20.7	ug/L	0.417	3.40	30	
1,1-Dichloroethene	CCC	20.0	22.1	ug/L	0.347	10.4	30	
1,2-Dichloropropane	CCC	20.0	21.1	ug/L	0.210	5.60	30	
Ethylbenzene	CCC	20.0	21.2	ug/L	0.475	6.20	30	
Toluene	CCC	20.0	21.2	ug/L	1.24	5.90	30	
Vinyl Chloride	CCC	20.0	21.5	ug/L	0.159	7.40	30	
Bromoform	SPCC	20.0	18.8	ug/L	0.135	5.80	30	
Chlorobenzene	SPCC	20.0	20.5	ug/L	0.859	2.30	30	
Chloromethane	SPCC	20.0	21.5	ug/L	0.220	7.30	30	
1,1-Dichloroethane	SPCC	20.0	20.9	ug/L	0.419	4.40	30	
1,1,2,2-Tetrachloroethane	SPCC	20.0	21.7	ug/L	0.363	8.50	30	
Acetone		20.0	23.1	ug/L	0.0357	15.5	30	
Benzene		20.0	21.3	ug/L	0.894	6.70	30	
Bromobenzene		20.0	20.8	ug/L	0.637	4.00	30	
Bromochloromethane		20.0	22.0	ug/L	0.140	9.90	30	
Bromodichloromethane		20.0	22.9	ug/L	0.296	14.3	30	
Bromomethane		20.0	22.9	ug/L	0.209	14.4	30	
2-Butanone		20.0	22.2	ug/L	0.0497	11.0	30	
n-Butylbenzene		20.0	22.0	ug/L	2.33	9.90	30	
sec-Butylbenzene		20.0	21.5	ug/L	2.84	7.40	30	
tert-Butylbenzene		20.0	21.1	ug/L	0.506	5.60	30	
Carbon Disulfide		20.0	18.8	ug/L	0.585	6.00	30	
Carbon Tetrachloride		20.0	20.6	ug/L	0.328	3.10	30	
Dibromochloromethane		20.0	19.7	ug/L	0.248	1.60	30	
Chloroethane		20.0	21.4	ug/L	0.175	7.00	30	
2-Chloroethyl Vinyl Ether		20.0	20.8	ug/L	0.0897	3.80	30	
2-Chlorotoluene		20.0	21.1	ug/L	1.98	5.70	30	
4-Chlorotoluene		20.0	19.9	ug/L	1.78	0.300	30	
1,2-Dibromo-3-Chloropropane		20.0	23.2	ug/L	0.0643	15.9	30	
1,2-Dibromoethane		20.0	21.4	ug/L	0.204	7.20	30	
Dibromomethane		20.0	22.8	ug/L	0.113	13.9	30	
1,2-Dichlorobenzene		20.0	20.1	ug/L	1.18	0.600	30	
1,3-Dichlorobenzene		20.0	20.4	ug/L	1.31	2.10	30	
1,4-Dichlorobenzene		20.0	19.3	ug/L	1.33	3.50	30	
Dichlorodifluoromethane		20.0	25.3	ug/L	0.353	26.3	30	
1,2-Dichloroethane		20.0	20.5	ug/L	0.272	2.70	30	
cis-1,2-Dichloroethene		20.0	21.9	ug/L	0.256	9.40	30	
trans-1,2-Dichloroethene		20.0	21.0	ug/L	0.237	5.10	30	
1,3-Dichloropropane		20.0	21.0	ug/L	0.351	5.00	30	
2,2-Dichloropropane		20.0	22.0	ug/L	0.376	10.2	30	
cis-1,3-Dichloropropene		20.0	21.5	ug/L	0.339	7.60	30	
trans-1,3-Dichloropropene		20.0	20.3	ug/L	0.358	1.40	30	

KEMRON FORMS - Modified 09/06/2007 - (ALT)
Version 1.5 PDF File ID: 1012420
Report generated 02/05/2008 15:15

KEMRON Environmental Services

ALTERNATE SOURCE CALIBRATION REPORT

00096096

Login Number: L08020032 Run Date: 12/12/2007 Sample ID: WG258140-12

Instrument ID: HPMS6 Run Time: 11:56 Method: 8260B

File ID: 6M71621 Analyst: CMS QC Key: STD

ICal Workgroup: WG258140 Cal ID: HPMS6 - 11-DEC-07

Analyte		Expected	Found	Units	RF	%D	UCL	Q
1,1-Dichloropropene		20.0	21.8	ug/L	0.319	9.10	30	
2-Hexanone		20.0	21.2	ug/L	0.0957	5.90	30	
Hexachlorobutadiene		20.0	22.2	ug/L	0.448	11.1	30	
Isopropylbenzene		20.0	19.4	ug/L	1.30	3.20	30	
p-Isopropyltoluene		20.0	21.2	ug/L	2.47	6.00	30	
4-Methyl-2-Pentanone		20.0	20.8	ug/L	0.0418	4.20	30	
Methylene Chloride		20.0	20.5	ug/L	0.228	2.70	30	
Naphthalene		20.0	21.6	ug/L	1.35	8.00	30	
n-Propylbenzene		20.0	21.4	ug/L	3.06	7.10	30	
Styrene		20.0	21.4	ug/L	0.968	6.80	30	
1,1,1,2-Tetrachloroethane		20.0	22.2	ug/L	0.299	10.9	30	
Tetrachloroethene		20.0	21.2	ug/L	0.330	6.20	30	
1,2,3-Trichlorobenzene		20.0	20.8	ug/L	0.669	4.10	30	
1,2,4-Trichlorobenzene		20.0	21.1	ug/L	0.829	5.70	30	
1,1,1-Trichloroethane		20.0	21.8	ug/L	0.378	9.20	30	
1,1,2-Trichloroethane		20.0	21.0	ug/L	0.197	5.00	30	
Trichloroethene		20.0	22.0	ug/L	0.253	10.0	30	
Trichlorofluoromethane		20.0	17.5	ug/L	0.368	12.5	30	
1,2,3-Trichloropropane		20.0	21.9	ug/L	0.118	9.50	30	
1,2,4-Trimethylbenzene		20.0	21.8	ug/L	2.39	8.80	30	
1,3,5-Trimethylbenzene		20.0	21.4	ug/L	2.22	7.10	30	
Vinyl Acetate		20.0	18.4	ug/L	0.199	8.10	40	
o-Xylene		20.0	20.6	ug/L	0.567	3.10	30	
m-,p-Xylene		40.0	42.4	ug/L	0.588	6.10	30	

* Exceeds %D Limit

CCC Calibration Check Compounds
SPCC System Performance Check Compounds

KEMRON FORMS - Modified 09/06/2007 - (ALT)
Version 1.5 PDF File ID: 1012420
Report generated 02/05/2008 15:15

KEMRON Environmental Services

CONTINUING CALIBRATION VERIFICATION (CCV)

00096097

Login Number: L08020032 Run Date: 02/05/2008 Sample ID: WG262325-02
Instrument ID: HPMS6 Run Time: 07:37 Method: 8260B
File ID: 6M72725 Analyst: CMS QC Key: STD
Workgroup (AAB#): WG262326 Cal ID: HPMS6 - 11-DEC-07

Analyte		Expected	Found	UNITS	RF	%D	UCL	Q
Chloroform	CCC	50.0	50.4	ug/L	0.407	0.760	20	
1,1-Dichloroethene	CCC	50.0	47.5	ug/L	0.299	4.98	20	
1,2-Dichloropropane	CCC	50.0	47.0	ug/L	0.187	5.97	20	
Ethylbenzene	CCC	50.0	49.0	ug/L	0.438	2.06	20	
Toluene	CCC	50.0	50.1	ug/L	1.17	0.237	20	
Vinyl Chloride	CCC	50.0	55.0	ug/L	0.156	9.90	20	
Bromoform	SPCC	50.0	52.3	ug/L	0.159	4.68	40	
Chlorobenzene	SPCC	50.0	48.0	ug/L	0.806	4.06	40	
Chloromethane	SPCC	50.0	49.8	ug/L	0.205	0.431	40	
1,1-Dichloroethane	SPCC	50.0	47.3	ug/L	0.379	5.50	40	
1,1,2,2-Tetrachloroethane	SPCC	50.0	49.2	ug/L	0.329	1.57	40	
Acetone		50.0	48.1	ug/L	0.0297	3.88	40	
Benzene		50.0	48.1	ug/L	0.806	3.78	40	
Bromobenzene		50.0	50.8	ug/L	0.622	1.53	40	
Bromochloromethane		50.0	50.6	ug/L	0.129	1.19	40	
Bromodichloromethane		50.0	55.4	ug/L	0.287	10.8	40	
Bromomethane		50.0	51.8	ug/L	0.189	3.66	40	
2-Butanone		50.0	43.5	ug/L	0.0390	13.0	40	
n-Butylbenzene		50.0	50.0	ug/L	2.12	0.0484	40	
sec-Butylbenzene		50.0	49.7	ug/L	2.63	0.546	40	
tert-Butylbenzene		50.0	48.7	ug/L	0.466	2.66	40	
Carbon Disulfide		50.0	52.6	ug/L	0.655	5.26	40	
Carbon Tetrachloride		50.0	52.2	ug/L	0.332	4.33	40	
Dibromochloromethane		50.0	50.2	ug/L	0.259	0.371	40	
Chloroethane		50.0	48.7	ug/L	0.159	2.55	40	
2-Chloroethyl Vinyl Ether		50.0	49.3	ug/L	0.0852	1.37	40	
2-Chlorotoluene		50.0	49.5	ug/L	1.85	1.02	40	
4-Chlorotoluene		50.0	49.4	ug/L	1.77	1.20	40	
1,2-Dibromo-3-Chloropropane		50.0	47.6	ug/L	0.0529	4.70	40	
1,2-Dibromoethane		50.0	50.5	ug/L	0.192	1.02	40	
Dibromomethane		50.0	51.6	ug/L	0.102	3.15	40	
1,2-Dichlorobenzene		50.0	46.8	ug/L	1.09	6.46	40	
1,3-Dichlorobenzene		50.0	49.7	ug/L	1.28	0.547	40	
1,4-Dichlorobenzene		50.0	46.7	ug/L	1.28	6.66	40	
Dichlorodifluoromethane		50.0	56.9	ug/L	0.318	13.7	40	
1,2-Dichloroethane		50.0	47.0	ug/L	0.249	5.94	40	
cis-1,2-Dichloroethene		50.0	50.5	ug/L	0.237	0.998	40	
trans-1,2-Dichloroethene		50.0	49.6	ug/L	0.224	0.802	40	
1,3-Dichloropropane		50.0	47.8	ug/L	0.320	4.33	40	
2,2-Dichloropropane		50.0	53.2	ug/L	0.362	6.32	40	
cis-1,3-Dichloropropene		50.0	50.1	ug/L	0.316	0.252	40	
trans-1,3-Dichloropropene		50.0	52.2	ug/L	0.368	4.30	40	

KEMRON FORMS - Modified 09/06/2007 - (CCV)
Version 1.5 PDF File ID: 1012422
Report generated 02/08/2008 11:55

CONTINUING CALIBRATION VERIFICATION (CCV)

00096098

Login Number: L08020032 Run Date: 02/05/2008 Sample ID: WG262325-02
Instrument ID: HPMS6 Run Time: 07:37 Method: 8260B
File ID: 6M72725 Analyst: CMS QC Key: STD
Workgroup (AAB#): WG262326 Cal ID: HPMS6 - 11-DEC-07

Analyte		Expected	Found	UNITS	RF	%D	UCL	Q
1,1-Dichloropropene		50.0	49.5	ug/L	0.290	0.932	40	
2-Hexanone		50.0	44.0	ug/L	0.0794	12.1	40	
Hexachlorobutadiene		50.0	43.0	ug/L	0.347	14.0	40	
Isopropylbenzene		50.0	50.9	ug/L	1.36	1.90	40	
p-Isopropyltoluene		50.0	48.9	ug/L	2.28	2.12	40	
4-Methyl-2-Pentanone		50.0	45.1	ug/L	0.0362	9.73	40	
Methylene Chloride		50.0	46.7	ug/L	0.200	6.70	40	
Naphthalene		50.0	41.3	ug/L	1.04	17.4	40	
n-Propylbenzene		50.0	50.8	ug/L	2.91	1.68	40	
Styrene		50.0	50.2	ug/L	0.910	0.423	40	
1,1,1,2-Tetrachloroethane		50.0	55.3	ug/L	0.298	10.6	40	
Tetrachloroethene		50.0	52.5	ug/L	0.327	4.93	40	
1,2,3-Trichlorobenzene		50.0	40.7	ug/L	0.523	18.6	40	
1,2,4-Trichlorobenzene		50.0	44.2	ug/L	0.694	11.6	40	
1,1,1-Trichloroethane		50.0	54.1	ug/L	0.375	8.26	40	
1,1,2-Trichloroethane		50.0	48.7	ug/L	0.183	2.53	40	
Trichloroethene		50.0	50.2	ug/L	0.231	0.333	40	
Trichlorofluoromethane		50.0	54.2	ug/L	0.456	8.35	40	
1,2,3-Trichloropropane		50.0	50.0	ug/L	0.108	0.0686	40	
1,2,4-Trimethylbenzene		50.0	49.5	ug/L	2.18	0.923	40	
1,3,5-Trimethylbenzene		50.0	50.6	ug/L	2.10	1.20	40	
Vinyl Acetate		50.0	53.7	ug/L	0.232	7.31	40	
o-Xylene		50.0	49.6	ug/L	0.546	0.821	40	
m-,p-Xylene		100	99.7	ug/L	0.553	0.284	40	
1,2-Dichloroethene		100	100	ug/L	0.230	0.0977	40	
Xylenes		150	149	ug/L	0.550	0.463	40	

* Exceeds %D Criteria

CCC Calibration Check Compounds
SPCC System Performance Check Compounds

KEMRON FORMS - Modified 09/06/2007 - (CCV)
Version 1.5 PDF File ID: 1012422
Report generated 02/08/2008 11:55

KEMRON ENVIRONMENTAL SERVICES
INTERNAL STANDARD AREA SUMMARY
(COMPARED TO CCV)

00096099

Login Number:L08020032
Instrument ID:HPMS6
Workgroup (AAB#):WG262326

CCV Number:WG262325-02
CAL ID: HPMS6-11-DEC-07
Matrix:WATER

Sample Number	Dilution	Tag	IS-1	IS-2	IS-3
WG262325-02	NA	NA	361655	614977	832153
Upper Limit	NA	NA	723310	1229954	1664306
Lower Limit	NA	NA	180828	307489	416077
L08020032-01	1.00	01	266405	468629	641762
L08020032-02	1.00	01	275495	479416	651853
WG262326-01	1.00	01	303665	542924	743815
WG262326-02	1.00	01	328672	563928	751372
WG262326-03	1.00	01	328103	561213	750589

IS-1 - 1,4-Dichlorobenzene-d4
IS-2 - Chlorobenzene-d5
IS-3 - Fluorobenzene

Underline = Response outside limits

KEMRON FORMS - Modified 02/20/2007
Version 1.3 PDF File ID: 1012423
Report generated 02/05/2008 15:15

KEMRON ENVIRONMENTAL SERVICES
INTERNAL STANDARD RETENTION TIME SUMMARY
(COMPARED TO CCV)

00096100

Login Number:L08020032
Instrument ID:HPMS6
Workgroup (AAB#):WG262326

CCV Number:WG262325-02
CAL ID: HPMS6-11-DEC-07
Matrix:WATER

Sample Number	Dilution	Tag	IS-1	IS-2	IS-3
WG262325-02	NA	NA	18.86	15.3	10.83
Upper Limit	NA	NA	19.36	15.8	11.33
Lower Limit	NA	NA	18.36	14.8	10.33
L08020032-01	1.00	01	18.86	15.3	10.83
L08020032-02	1.00	01	18.86	15.3	10.83
WG262326-01	1.00	01	18.86	15.3	10.83
WG262326-02	1.00	01	18.86	15.31	10.82
WG262326-03	1.00	01	18.86	15.3	10.83

IS-1 - 1,4-Dichlorobenzene-d4
IS-2 - Chlorobenzene-d5
IS-3 - Fluorobenzene

Underline = Response outside limits

KEMRON FORMS - Modified 02/20/2007
Version 1.3 PDF File ID: 1012425
Report generated 02/05/2008 15:15

3.0 Attachments

Kemron Environmental Services
Analyst Listing
February 8, 2008

AJF – AMANDA J. FICKIESEN
ALB – ANNIE L. BROWN
AML – ANTHONY M. LONG
ARA – ADRIAN R. ACHTERMANN
ASP – AARON S. PETRIE
BRG – BRENDA R. GREGORY
CAA – CASSIE A. AUGENSTEIN
CAF – CHERYL A. FLOWERS
CAH – CHARLES A. HALL
CEB – CHAD E. BARNES
CLC – CHRYS L. CRAWFORD
CLW – CHARISSA L. WINTERS
CM – CHARLIE MARTIN
CMS – CRYSTAL M. STEPHENS
CPD – CHAD P. DAVIS
CSH – CHRIS S. HILL
DD – DIANE M. DENNIS
DDE – DEBRA D. ELLIOTT
DEL – DON E. LIGHTFRITZ
DEV – DAVID E. VANDENBERG
DGB – DOUGLAS G. BUTCHER
DIH – DEANNA I. HESSON
DLB – DAVID L. BUMGARNER
DLP – DOROTHY L. PAYNE
DLR – DIANNA L. RAUCH
DR – DEANNA ROBERTS
DRP – DAVE R. PITZER
DSF – DEBRA S. FREDERICK
ECL – ERIC C. LAWSON
ED – EMILY E. DECKER
ERE – ERIN R. ELDER
FJB – FRANCES J. BOLDEN
HAV – HEMA VILASAGAR
HJR – HOLLY J. REED
JAB – JUANITA A. BECKER
JAL – JOHN A. LENT
JBK – JEREMY B. KINNEY
JDH – JUSTIN D. HESSON
JKP – JACQUELINE K. PARSONS
JKT – JANE K. THOMPSON
JLK – JUSTEN L. KNOPP
JWR – JOHN W. RICHARDS
JWS – JACK W. SHEAVES
JYH – JI Y. HU
KCZ – KEVIN C. ZUMBRO
KEB – KATHRYN E. BARNES
KHR – KIM H. RHODES
KJW – KATIE J. WIEFERICH
KRA – KATHY R. ALBERTSON
LKN – LINDA K. NEDEFF
LSB – LESLIE S. BUCINA
MDA – MIKE D. ALBERTSON
MDC – MICHAEL D. COCHRAN
MES – MARY E. SCHILLING
MKZ – MARILYN K. ZUMBRO
MLR – MARY L. ROCHOTTE
MMB – MAREN M. BEERY
MRT – MICHELLE R. TAYLOR
MSW – MATT S. WILSON
NJB – NATALIE J. BOOTH
NPM – NATHANIEL P. MILLER
PJM – PAUL J. MILLER
RAH – ROY A. HALSTEAD
RB – ROBERT BUCHANAN
REK – ROBERT E. KYER
RLF – RACHEL L. FRYE
RLK – ROBIN L. KLINGER
RNP – RICK N. PETTY
RWC – RODNEY W. CAMPBELL
SLM – STEPHANIE L. MOSSBURG
SLP – SHERI L. PFALZGRAF
SMH – SHAUNA M. HYDE
TDH – TRICIA D. HUCK
TMB – TIFFANY M. BAILEY
TMM – TAMMY M. MORRIS
VC – VICKI COLLIER
WFM – WALTER F. MARTIN

KEMRON Environmental Services

List of Valid Qualifiers

February 08, 2008

00096103

Qualkey: STD

Qualifier	Description
*	Surrogate or spike compound out of range
+	Correlation coefficient for the MSA is less than 0.995
<	Result is less than the associated numerical value.
>	Result is greater than the associated numerical value.
A	See the report narrative
B	Analyte present in method blank
C	Confirmed by GC/MS
CG	Confluent growth
DL	Surrogate or spike compound was diluted out
E	Estimated concentration due to sample matrix interference
EDL	Elevated sample reporting limits, presence of non-target analytes
EMPC	Estimated Maximum Possible Concentration
FL	Free Liquid
I	Semiquantitative result (out of instrument calibration range)
J	The analyte was positively identified, but the quantitation was below the RL
J,B	Analyte detected in both the method blank and sample above the MDL.
J,P	Estimate; columns don't agree to within 40%
J,S	Estimated concentration; analyzed by method of standard addition (MSA)
L	Sample reporting limits elevated due to matrix interference
M	Matrix effect; the concentration is an estimate due to matrix effect.
N	Tentatively identified compound(TIC)
NA	Not applicable
ND	Not detected at or above the reporting limit
ND,L	Not detected; sample reporting limit (RL) elevated due to interference
ND,S	Not detected; analyzed by method of standard addition (MSA)
NF	Not found by library search
NFL	No free liquid
NI	Non-ignitable
NR	Analyte is not required to be analyzed
NS	Not spiked
P	Concentrations >40% difference between the two GC columns
Q	One or more quality control criteria fail. See narrative.
QNS	Quantity of sample not sufficient to perform analysis
RA	Reanalysis confirms reported results
RE	Reanalysis confirms sample matrix interference
S	Analyzed by method of standard addition (MSA)
SMI	Sample matrix interference on surrogate
SP	Reported results are for spike compounds only
TIC	Library Search Compound
TNTC	Too numerous to count
U	Undetected; the concentration is below the reported MDL.
UJ	Undetected; the MDL and RL are estimated due to quality control discrepancies.
W	Post-digestion spike for furnace AA out of control limits
X	Exceeds regulatory limit
X, S	Exceeds regulatory limit; method of standard additions (MSA)
Z	Cannot be resolved from isomer - see below

*****Special Notes for Organic Analytes**

1. Acrolein and acrylonitrile by method 624 are semi-quantitative screens only.
2. 1,2-Diphenylhydrazine is unstable and is reported as azobenzene.
3. N-nitrosodiphenylamine cannot be separated from diphenylamine.
4. 3-Methylphenol and 4-Methylphenol are unresolvable compounds.
5. m-Xylene and p-Xylene are unresolvable compounds.
6. The reporting limits for Appendix II/IX compounds by method 8270 are based on EPA estimated PQLs referenced in 40 CFR Part 264, Appendix IX. They are not always achievable for every compound an are matrix dependent.

00096104

Chain of Custody

NO. 10236

Shaw® Shaw Environmental & Infrastructure, Inc.
3010 Briarpark Drive, Suite 400
Houston, TX 77042
(713) 996-4400

Laboratory Name: Kemron Address: 156 Starlite Dr. Marietta, OH Contact: Stephanie Mossburg

Project Name: LHAAP Project Location: Karnack, Tx.

Project No.: 11759.0009B800 Project Contact: Kay Everett Project Telephone No.: 713-996-4421

Point of Contact: Kay Everett Telephone No.: 713-996-4421

Project Manager/Supervisor: Praveen Srivastav

Analysis and Method Desired (Indicate separate containers)

Item No.	Sample ~~Telephone~~ Number	Date	Time	Comp	Grab	Matrix	Sample Description, Location	Number of Containers	VOC							Remarks
1	29WW37-020108	2/1/08	1:35		✓	W	Groundwater, Site 29	3	3							
2	29WW39-020108	2/1/08	3:30		✓	W	Groundwater, Site 29	3	3							
3																
4																
5																
6																
7																
8																
9																
10																

Transfers Relinquished By (signature)	Date/Time	Transfers Accepted By (signature)	Date/Time	Special Instructions
Scott Beesley	2/1/08 4:00			24 HR. TAT
				FedEx Airbill No.:
		Laboratory	2/2/08 1030	Sampler's Signature: Scott Beesley

TAT: ____ Standard ____ Rush Date ____ Seals Intact? ✓ Y ____ N Received Good Condition ✓ Y ____ N ✓ Cold

White - Lab Copy Canary - Field Copy Pink - File Copy

Form Number: 433_1
Rev. 03-19-07

KEMRON Environmental Services

SAMPLE RECEIPT FORM

00096105

156 Starlite Drive
Marietta, OH 45750
(740) 373-4071

Client:	Shaw-
Workorder Number:	B ——
Date Received:	2-2-08
Delivered by:	( ) Fedx (✓) UPS ( ) Client ( ) Courier **Time:** 1030
Opened by:	RLK
IR Temp Gun:	( ) D (✓) G
Logged by:	BG L 2.32

Cooler information

Cooler ID	Temp C	Airbill#	COC#	Other
532	3	1Z 606 725 44 9614 6158	10236	under 24 hr TAT

Inspection Checklist	**Y**	**N**	**NA**	**Discrepancy ID**
Were shipping coolers sealed?	✓			
Were custody seals intact?	✓			
Were cooler temperatures in range of 0 - 6?	✓			
Was ice present?	✓			
Were COC's received/ information complete/signed and dated?	✓			
Were sample containers and labels intact and match COC?	✓			
Were the correct containers and volumes received?	✓			
Were correct preservatives used? (water only)			✓	
Were pH ranges acceptable? (voa's excluded)			✓	
Were VOA samples free of headspace?	✓			
Were samples received within EPA hold times?	✓			

Discrepancy/Comments/Other Problems

* Stored Cooler in walk in over weekend.

Distribution

Name of KEMRON representative
Client/Company:
Person Contacted:
Date contacted:

Resolution/other comments:

KEMRON Environmental Services
Internal Chain of Custody Report

00096106

Login: L08020032
Account: 2773
Project: 2773.025
Samples: 2
Due Date: 05-FEB-2008

Samplenum	Container ID	Products
L08020032-01	422149	826-LOW

Bottle: 1

Seq.	Purpose	From	To	Date/Time	Accept	Relinquish
1	LOGIN	COOLER	V1	04-FEB-2008 10:47	BRG	
2	ANALYZ	V1	ORG4	05-FEB-2008 08:26	CMS	RLK

Bottle: 2

Seq.	Purpose	From	To	Date/Time	Accept	Relinquish
1	LOGIN	COOLER	V1	04-FEB-2008 10:47	BRG	
2	ANALYZ	V1	ORG4	05-FEB-2008 08:26	CMS	RLK

Bottle: 3

Seq.	Purpose	From	To	Date/Time	Accept	Relinquish
1	LOGIN	COOLER	V1	04-FEB-2008 10:47	BRG	
2	ANALYZ	V1	ORG4	05-FEB-2008 08:26	CMS	RLK

Samplenum	Container ID	Products
L08020032-02	422150	826-LOW

Bottle: 1

Seq.	Purpose	From	To	Date/Time	Accept	Relinquish
1	LOGIN	COOLER	V1	04-FEB-2008 10:47	BRG	
2	ANALYZ	V1	ORG4	05-FEB-2008 08:26	CMS	RLK

Bottle: 2

Seq.	Purpose	From	To	Date/Time	Accept	Relinquish
1	LOGIN	COOLER	V1	04-FEB-2008 10:47	BRG	
2	ANALYZ	V1	ORG4	05-FEB-2008 08:26	CMS	RLK

Bottle: 3

Seq.	Purpose	From	To	Date/Time	Accept	Relinquish
1	LOGIN	COOLER	V1	04-FEB-2008 10:47	BRG	
2	ANALYZ	V1	ORG4	05-FEB-2008 08:26	CMS	RLK

A1 - Sample Archive (COLD)
A2 - Sample Archive (AMBIENT)
F1 - Volatiles Freezer in Login
V1 - Volatiles Refrigerator in Login
W1 - Walkin Cooler in Login

Shaw Environmental & Infrastructure, Inc.

Technology Applications
312 Directors Drive
Knoxville, TN 37923
Phone: 865.690.3211
FAX: 865.694.9573

Shaw The Shaw Group Inc.™

STATEMENT OF ANALYSIS

Client: Longhorn Army Ammunition Plant — Date: March 20, 2007

Contact: Allen Willmore/Diane Meyer — Project No. 845714

Client Project Name / ID:	Longhorn Army Ammunition Plant
Date Received by Lab:	February 21, 23, 26, and 27, 2007
Number of Samples:	Thirty-five (35)
Sample Type:	Groundwater

1.0 Introduction

On February 21, 23, 26, and 27, 2007 a total of thirty-seven (37) groundwater samples arrived at Shaw Environmental, Inc. Technology Development Laboratory in Knoxville, Tennessee. Matrix spike and matrix spike duplicate samples are not conducive to DNA analysis and therefore were not run. Therefore a total of thirty-five (35) groundwater samples were analyzed. The microbial communities from the groundwater samples were screened for the presence of *Dehalococcoides* species.

2.0 Overview of Analytical Methodology

A Roche Real-Time LightCycler PCR instrument was used to determine the presence of and quantify *Dehalococcoides* sp. in groundwater. All cells (animals, plants, fungi, and bacteria) contain DNA that allows for their identification. The polymerase chain reaction (PCR) is a method of copying a specific sequence of DNA into a quantity that can be detected. If the sequence in *Dehalococcoides* sp. is located, the reaction creates multiple copies. During this reaction a genetic fluorescent tag specific for the region attaches to each copied strand of DNA, which is then detected by the instrument. A *Dehalococcoides* species DNA (positive control), a *Dehalococcoides*-negative bacterial species (negative control), and no template control (blank) are analyzed to verify the test results.

3.0 Results

The microbial communities in the groundwater samples were screened for the presence of *Dehalococcoides* species. The results are shown in the Table 1 below.

Table 1. Dehalococcoides Results

Sample No.	Shaw Sample No.	Concentration (cells / milliliter)
46WW04-FEB2007	0488	1.0×10^1 U
46WW01-FEB2007	0489	5.2×10^1 U
LHSMW-23-FEB2007	0490	**1.5×10^1**
46WW02-FEB2007	0515	**8.0×10^3**
47WW14-FEB2007	0516	1.0×10^1 U
47WW14-FEB2007 FD	0517	**1.5×10^1**
47WW13-FEB2007	0518	7.7×10^1 U
LHSMW-22-FEB2007	0519	1.0×10^1 U
17WW01- FEB2007	0520	1.0×10^1 U
17WW01- FEB2007-FD	0521	1.1×10^1 U
LHSMW-19-FEB2007	0522	**3.0×10^1**
LHSMW-18-FEB2007	0523	1.7×10^1 U
LHSMW-04-FEB2007	0524	1.0×10^1 U
47WW09-FEB2007	0525	1.2×10^1 U
17WW10-FEB2007	0526	**5.0×10^1**
17WW12-FEB2007	0527	1.0×10^1 U
LHSMW-06-FEB2007	0528	**8.6×10^1**
LHSMW-07-FEB2007	0529	**6.8×10^1**
29WW36-FEB2007	0530	1.0×10^1 U
50WW05-FEB2007	0551	**3.6×10^1**
50WW02-FEB2007	0554	**1.2×10^1**
17WW05-FEB2007	0555	3.7×10^1 U
17WW06-FEB2007	0556	1.0×10^1 U
130-FEB2007	0567	**3.5×10^1**
17WW16-FEB2007	0557	8.3×10^1 U
17WW02-FEB2007	0558	1.0×10^1 U
17WW02-FEB2007-FD	0559	**4.1×10^1**
47WW30-FEB2007	0560	1.0×10^1 U
LHSMW-43-FEB2007	0561	2.2×10^1 U
50WW06- FEB2007	0562	1.0×10^1 U
29WW38-FEB2007	0563	1.0×10^1 U
29WW35-FEB2007	0564	1.0×10^1 U
29WW06-FEB2007	0566	1.0×10^1 U

Table 1. continued Dehalococcoides Results

50WW03	0568	1.0×10^1 U
29WW15	0569	1.6×10^1 U
Dehalococcoides – Positive Control	---	**7.6×10^6**
Dehalococcoides – Positive Control	--	**7.5×10^6**
Negative (no DNA template control)	--	1.0×10^1 U
Negative (no DNA template control)	--	1.0×10^1 U

U: Less than method detection limit.
Bold: Positive Detection

4.0 Quality Control (QC)

Standard laboratory QC was performed.

Analyst: Jennifer Smith/Kit Daniels

Reviewed and Approved

Robert E. Mayer Jr.
Shaw Environmental, Inc.

00096110

Shaw™
Shaw E & I, Inc.

ANALYSIS REQUEST AND CHAIN-OF-CUSTODY RECORD

REFERENCE COC NO.: LHAAP-Team 1-01B

PAGE 1 OF 1

Project Name/No: Lonhorn Army Ammunition Plant
Sample Team Member: Allen Willmore - 713-247-9292
Project Contact/Phone: Kay Everette - 713-996-4421
Project Manager: Praveen Srivastav
Project No.: 117591
Required Report Date:

Sample Shipment Date:
Laboratory Destination: Shaw E&I Labs
Laboratory Contact: Robert Mayer - 865-690-3211
Lab Address 312 Directors Dr.
Knoxville, TN 37923
Carrier Waybill No.:

Bill To: Diane Meyer
Shaw E & I
3010 Briarpark Drive
Houston, TX 77042

Report To: Diane Meyer
Shaw E & I
3010 Briarpark Drive
Houston, TX 77042

Sample Number	Sample Type/ Description	Date/Time Collected	Container Type	Sample Volume	Pre-servative	Requested Testing Program	Condition on Receipt	Disposal Record
~~46WW02~~	GW		~~Amb. Gl~~	~~1 - L~~	~~NA~~	~~Dehalococoides by Shaw SOP~~ (AW)		
~~LHSMW-18 -~~	GW		~~Amb. Gl~~	~~1 - L~~	~~NA~~	Dehalococoides by Shaw SOP (AW)		
~~LHSMW-19 -~~	GW		~~Amb. Gl~~	~~1 - L~~	~~NA~~	~~Dehalococoides by Shaw SOP~~ (AW)		
46WW04 - Feb2007	GW	2-19-07 1405	Amb. Gl	1 - L	NA	Dehalococoides by Shaw SOP	4°C	
~~46WW01~~	GW		~~Amb. Gl~~	~~1 - L~~	~~NA~~	~~Dehalococoides by Shaw SOP~~ (AW)		
~~LHSMW-22 -~~	GW		~~Amb. Gl~~	~~1 - L~~	~~NA~~	~~Dehalococoides by Shaw SOP~~ (AW)		
~~LHSMW-23 -~~	GW		~~Amb. Gl~~	~~1 - L~~	~~NA~~	~~Dehalococoides by Shaw SOP~~ (AW)		
-	GW		Amb. Gl	1 - L	NA	Dehalococoides by Shaw SOP		
-	GW		Amb. Gl	1 - L	NA	Dehalococoides by Shaw SOP		
			Amb. Gl	1 - L	NA	Dehalococoides by Shaw SOP		

SEK0488

Special Instructions:

Sample Disposal:
Return to Client: ___ Disposal by Lab: X Archive: ___

Turnaround Time:
Normal: X Rush: ___

Level of QC Required:
Definitive: X Project Specific: ___

1. Relinquished by: Shaw (AW) IT Corporation	Date: 2/19/07 Time: 16:30	1. Received by: Scott Beasley	Date: 2/20/07 Time: 07:30
2. Relinquished by: Scott Beasley	Date: 2/20/07 Time: 08:30	2. Received by:	Date: 2/21/07 Time: 1020
3. Relinquished by:	Date: Time:	2. Received by:	Date: Time:

Comments:

LHAAP-Team2-01B

00096111

Shaw™
Shaw E & I, Inc.

ANALYSIS REQUEST AND CHAIN-OF-CUSTODY RECORD

REFERENCE COC NO.:

PAGE 1 OF

Project Name/No: Lonhorn Army Ammunition Plant
Sample Team Member: Allen Willmore - 713-247-9292
Project Contact/Phone: Kay Everette - 713-996-4421
Project Manager: Praveen Srivastav
Project No.: 117591
Required Report Date:

Sample Shipment Date:
Laboratory Destination: Shaw E&I Labs
Laboratory Contact: Robert Mayer - 865-690-3211
Lab Address 312 Directors Dr.
Knoxville, TN 37923
Carrier Waybill No.:

Bill To: Diane Meyer
Shaw E & I
3010 Briarpark Drive
Houston, TX 77042

Report To: Diane Meyer
Shaw E & I
3010 Briarpark Drive
Houston, TX 77042

Sample Number	Sample Type/ Description	Date/Time Collected	Container Type	Sample Volume	Pre-servative	Requested Testing Program	Condition on Receipt	Disposal Record
~~46WW02~~	GW		Amb. Gl	1 - L	NA	~~Dehalococoides by Shaw SOP~~		
~~LHSMW-18~~	GW		Amb. Gl	1 - L	NA	Dehalococoides by Shaw SOP		
~~LHSMW-19~~	GW		Amb. Gl	1 - L	NA	Dehalococoides by Shaw SOP		
~~46WW04~~	GW		Amb. Gl	1 - L	NA	Dehalococoides by Shaw SOP		
46WW01 - FEB 2007	GW	021907/1450	Amb. Gl	1 - L	NA	Dehalococoides by Shaw SOP	4oC	
~~LHSMW-22~~	GW		Amb. Gl	1 - L	NA	~~Dehalococoides by Shaw SOP~~		
~~LHSMW-23~~	GW		Amb. Gl	1 - L	NA	Dehalococoides by Shaw SOP		
-	GW		Amb. Gl	1 - L	NA	Dehalococoides by Shaw SOP		
-	GW		Amb. Gl	1 - L	NA	Dehalococoides by Shaw SOP		
			Amb. Gl	1 - L	NA	Dehalococoides by Shaw SOP		

SEK 0489

Special Instructions:

Sample Disposal:
Return to Client: ___ Disposal by Lab: X Archive: ___

Turnaround Time:
Normal: X Rush: ___

Level of QC Required:
Definitive: X Project Specific: ___

1. Relinquished by: Shaw ~~IT Corporation~~	Date: 2/19/07 Time: 1800	1. Received by: Scott Beasinger	Date: 2/20/07 Time: 07:30
2. Relinquished by: Scott Beasinger	Date: 2/20/07 Time: 08:30	2. Received by:	Date: 2/21/07 Time: 10:30
3. Relinquished by:	Date: Time:	2. Received by:	Date: Time:

Comments:

00096112

Shaw™
Shaw E & I, Inc.

ANALYSIS REQUEST AND CHAIN-OF-CUSTODY RECORD

REFERENCE COC NO.: LHAAP- Team 3 - 01B

PAGE 1 OF 1

Project Name/No: Lonhorn Army Ammunition Plant
Sample Team Member: Allen Willmore - 713-247-9292
Project Contact/Phone: Kay Everette - 713-996-4421
Project Manager: Praveen Srivastav
Project No.: 117591
Required Report Date:

Sample Shipment Date:
Laboratory Destination: Shaw E&I Labs
Laboratory Contact: Robert Mayer - 865-690-3211
Lab Address 312 Directors Dr.
Knoxville, TN 37923
Carrier Waybill No.:

Bill To: Diane Meyer
Shaw E & I
3010 Briarpark Drive
Houston, TX 77042

Report To: Diane Meyer
Shaw E & I
3010 Briarpark Drive
Houston, TX 77042

Sample Number	Sample Type/ Description	Date/Time Collected	Container Type	Sample Volume	Pre-servative	Requested Testing Program	Condition on Receipt	Disposal Record
~~46WW02~~	~~GW~~		Amb. Gl	1 - L	NA	Dehalococcoides by Shaw SOP		
~~LHSMW-18~~	~~GW~~		~~Amb. Gl~~	~~1 - L~~	~~NA~~	~~Dehalococcoides by Shaw SOP~~		
~~LHSMW-19~~	~~GW~~		Amb. Gl	1 - L	NA	Dehalococcoides by Shaw SOP		
~~46WW04~~	~~GW~~		Amb. Gl	1 - L	NA	Dehalococcoides by Shaw SOP		
~~46WW01~~	~~GW~~		Amb. Gl	1 - L	NA	Dehalococcoides by Shaw SOP		
~~LHSMW-22~~	~~GW~~	02/19/07 ~~13:00~~	~~Amb. Gl~~	~~1 - L~~	NA	Dehalococcoides by Shaw SOP		
LHSMW-23 - ~~Feb07~~	GW	02/19/07 13:30	Amb. Gl	1 - L	NA	Dehalococcoides by Shaw SOP	Y o C	
- FEB22007	GW		Amb. Gl	1 - L	NA	Dehalococcoides by Shaw SOP		
-	GW		Amb. Gl	1 - L	NA	Dehalococcoides by Shaw SOP		
			Amb. Gl	1 - L	NA	Dehalococcoides by Shaw SOP		

SEK 0490

Special Instructions:

Sample Disposal:
Return to Client: ___ Disposal by Lab: X Archive: ___

Turnaround Time:
Normal: X Rush: ___

Level of QC Required:
Definitive: X Project Specific: ___

1. Relinquished by: SHAW ~~IT Corporation~~	Date: 2/19/07	1. Received by:	Date: 2/20/07
	Time: 16:30		Time: 07:30
2. Relinquished by:	Date: 2/20/07	2. Received by:	Date: 2/21/07
	Time: 08:30		Time: 1030
3. Relinquished by:	Date:	2. Received by:	Date:
	Time:		Time:

Comments:

00096113

Shaw® Shaw Environmental, Inc.

3010 Briarpark Drive, Suite 4N
Houston, TX 77042 (713) 996-4400

CHAIN-OF-CUSTODY

No. 10915

Laboratory Name: Shaw E&I Lab
Address: 312 Directors Drive Knoxville, TN. 37923
Contact: Robert Mayer 865-690-3211

Project Name: Longhorn Army Ammunition Plant
Project Location: Karnack, TX

Project No.: 117591
Project Contact: Kay Everette
Project Telephone No.: 713-996-4421

Point of contact: Diane Meyer
Telephone No.: 713996-4408
Project Manager/Supervisor: Praveen Srivastav

Analysis and Method Desired (Indicate separate containers)

Item No.	Sample Number	Date	Time	Comp	Grab	Matrix	Sample Description, Location	Number of Containers	DEHALOCOCOIDES							Remarks
1	46WW02-FEB2007	2/20/07	0934		X	W	46WW02	2	X	0515						SEK 0515
2	47WW14-FEB 2007	2/20/07	1223		X	W	47WW14	2	X	0516						SEK 0516
3	47WW14FEB2007 FD	2/20/07	1223		X	W	47WW14-FD	2	X	0517						SEK 0517
4	47WW13 FEB 2007	2/20/07	1554		X	W	47WW13	2	X	0518						SEK 0518
5																
6																
7																
8																
9																
10																

2/20/07 JCB

Transfers Relinquished By (Signature)	Date/Time	Transfers Accepted By (Signature)	Date/Time
J. Bl[illegible]	2/20/07 @ 1800	Scott Beesinger	2-21-07 08:10
Scott Beesinger	2-21-07 08:30	S Scarborough	2-23-07 1:30
		Laboratory	

Special Instructions

FedEx Airbill No.:

Sampler's Signature: [signature]

TAT: X Standard ____ Rush Due: ___ Seals Intact? ____ Y ____ N Received Good Condition ____ Y ____ N ____ Cold

White - Lab Copy Canary - Field Copy Pink - File Copy

00096114

Team 3-02B

Shaw® Shaw Environmental, Inc.

3010 Briarpark Drive, Suite 4N
Houston, TX 77042 (713) 996-4400

CHAIN-OF-CUSTODY

No. 10934

Laboratory Name: Shaw E&I Labs Address: 312 Directors Dr Knoxville TN 37923 Contact: R. Mayer 8656903211

Project Name: LHAAP | Project Location: Karnack, TX

Project No.: 117591 | Project Contact: K. Everette | Project Telephone No.: 713 9964421

Point of contact: D. Meyers | Telephone No.: 713 996 4408

Project Manager/Supervisor: P. Srivastav

Item No.	Sample Number	Date	Time	Comp	Grab	Matrix	Sample Description, Location	Number of Containers	Dehalococcoides	Analysis and Method Desired (Indicate separate containers)	Remarks
1	LHSMW22-Feb2007	2/24/07	8:50		X	W	Groundwater	2	✓		SEK 0519
2	17WW01-Feb2007	2/20/07	15:10		X	W	Groundwater	2	✓		SEK 0520
3	17WW01-Feb2007-FD	2/20/07	15:10		X	W	Groundwater	2	✓		SEK 0521
4											
5											
6											
7											
8											
9											
10											

Transfers Relinquished By (Signature)	Date/Time	Transfers Accepted By (Signature)	Date/Time
Susan Allen	02/20/07	Scott Beesinger	2-21-07 08:10
Scott Beesinger	2-21-07 08:30	S Scarborough	2-23-07
		Laboratory	

Special Instructions

FedEx Airbill No.:

Sampler's Signature: Susan Allen

TAT: X Standard ____ Rush Due: ____ Seals Intact? ____ Y ____ N Received Good Condition ____ Y ____ N ____ Cold

White - Lab Copy Canary - Field Copy Pink - File Copy

00096115

Shaw® Shaw Environmental, Inc.

3010 Briarpark Drive, Suite 4N
Houston, TX 77042 (713) 996-4400

CHAIN-OF-CUSTODY

No. 10950

Laboratory Name: Shaw ENI Address: 312 Directors Dr. Knoxville, TN 37923 Contact: Robert Mayer 865-690-3211

Project Name: Longhorn Army Ammunition Plant Project Location: KARNACK, TX

Project No.: 117591 Project Contact: Kay Everette Project Telephone No.: 713-996-4421

Point of contact: Diane Meyer Telephone No. 713-996-4408

Project Manager/Supervisor: Praveen Srimastav

Item No.	Sample Number	Date	Time	Comp	Grab	Matrix	Sample Description, Location	Number of Containers	Dehalo Acids	Remarks
1	LHSMW19-Feb2007	2/20/07	0950		✓	W	Site 44, LHAAP	2	✓	
2	LHSMW18-Feb2007	2/20 07	1630		✓	W	Site 46, GW	12	✓	MS/MSD
3	LHSMW04-Feb2007	2/20 07	1530		✓	W	Site 35A, GW	2	✓	1 of 2 broken
4										
5										
6										
7										
8										
9										
10										

SEK 0522
SEK 0523
SEK 0524

Transfers Relinquished By (Signature)	Date/Time	Transfers Accepted By (Signature)	Date/Time
Sherry McFadden	2-20-07 1630	Scott Beesinger	2-21-07 08:10
Scott Beesinger	2-21-07 08:30	Shearborough	2-23-07
		Laboratory	

Special Instructions

FedEx Airbill No.:

Sampler's Signature: Sherry McFadden

TAT: ____ Standard ____ Rush Due: ___ Seals Intact? ____ Y ____ N Received Good Condition ____ Y ____ N ____ Cold

White - Lab Copy Canary - Field Copy Pink - File Copy

00096116

Shaw® Shaw Environmental, Inc.

3010 Briarpark Drive, Suite 4N
Houston, TX 77042 (713) 996-4400

CHAIN-OF-CUSTODY

No. 10917

Laboratory Name: Shaw E&I LABS
Address: 312 Directors Drive Knoxville, TN - 37923
Contact: Robert Mayer 865-690-3211

Project Name: Longhorn Army Ammunition Plant
Project Location: Karnack, TX
Project No.: 117591
Project Contact: Kay Everette
Project Telephone No.: 713-996-4421
Point of contact: DIANE Meyer
Telephone No.: 713-996-4408
Project Manager/Supervisor: PRAVEEN SRIVASTAV

Analysis and Method Desired (Indicate separate containers)

Item No.	Sample Number	Date	Time	Comp	Grab	Matrix	Sample Description, Location	Number of Containers	DEHALOCOCODIES							Remarks
1	47WW09-FEB2007	2/21/07	1422		X	W	47WW09	2	X							
2																
3																
4																
5																
6																
7																
8																
9																
10																

SEK 0525

Transfers Relinquished By (Signature)	Date/Time	Transfers Accepted By (Signature)	Date/Time
J. Bl[illegible]	2/21/07@1800	Scott Beesinger	2/22/07 07:50
Scott Beesinger	2/22/07 0830	S Scarborough	2/23/07
		Laboratory	

Special Instructions

FedEx Airbill No.:

Sampler's Signature J. B[illegible]

TAT: ____ Standard ____ Rush Due: ___ Seals Intact? ____ Y ____ N Received Good Condition ____ Y ____ N ____ Cold

White - Lab Copy Canary - Field Copy Pink - File Copy

00096117

Shaw® Shaw Environmental, Inc.

3010 Briarpark Drive, Suite 4N
Houston, TX 77042 (713) 996-4400

CHAIN-OF-CUSTODY

No. 10933

Laboratory Name: Shaw E&I Labs Address: 312 Directors Dr Knoxville TN 37923 Contact: R. Mayer 865-690-3211

Project Name: LHAAP Project Location: Karnack, TX

Project No.: 117591 Project Contact: K. Everette Project Telephone No.: 7139964421

Point of contact: D. Meyers Telephone No.: 7139964408

Project Manager/Supervisor: D. Srivastav

Item No.	Sample Number	Date	Time	Comp	Grab	Matrix	Sample Description, Location	Number of Containers	Dehalococcoidies	Analysis and Method Desired (Indicate separate containers)	Remarks
1	17WW10-Feb2007	2/21/07	14:58 Hours		X	W	17WW10 Groundwater	2	✓		SEK 0526
2	17WW12-Feb2007	2/21/07	11:05		X	W	17WW12 Groundwater	2	✓		SEK 0527
3											
4											
5											
6											
7											
8											
9											
10											

Transfers Relinquished By (Signature)	Date/Time	Transfers Accepted By (Signature)	Date/Time
Susan Miller	2/21/07 17:00	Scott Beesinger	2/22/07 0750
Scott Beesinger	2/22/07 0830	S Beesinger	2/23/07
		Laboratory	

Special Instructions

FedEx Airbill No.:

Sampler's Signature: Susan Miller

TAT: ____ Standard ____ Rush Due: ___ Seals Intact? ____ Y ____ N Received Good Condition ____ Y ____ N ____ Cold

White - Lab Copy Canary - Field Copy Pink - File Copy

00096118

Shaw® Shaw Environmental, Inc.

3010 Briarpark Drive, Suite 4N
Houston, TX 77042 (713) 996-4400

CHAIN-OF-CUSTODY

No. 10953

Laboratory Name: Shaw ENI | Address: 312 Directors Dr. Knoxville, TN 37923 | Contact: Robert Mayer 865-690-3211

Project Name: Longhorn Army Ammunition Plant | Project Location: Karnack, TX

Project No.: 117591 | Project Contact: Kay Everette | Project Telephone No.: 713-996-4421

Point of contact: Diane Meyer | Telephone No.: 713-996-4408

Project Manager/Supervisor: Praveen Srivastav

Item No.	Sample Number	Date	Time	Comp	Grab	Matrix	Sample Description, Location	Number of Containers	Dahalocoides	Analysis and Method Desired (Indicate separate containers)	Remarks
1	LHSMW06-Feb2007	2/21 07	1020		✓	W	GW Site 35A	2	✓	SEK 0528	MS-0528 MSD-0529
2	LHSMW07-Feb2007	2-21 07	1315		✓	W	GW, Site 35A 5Km	12	✓	SEK 0529	2 MS + MSD
3	29WW36-Feb2007	2-21 07	1515		✓	W	GW, Site 29	2	✓	SEK 0530	
4										SEK 0531	
5										2-L bacteria	
6										2-L Explosive	
7											
8											
9											
10											

Transfers Relinquished By (Signature)	Date/Time	Transfers Accepted By (Signature)	Date/Time
Sherry McAdoo	2-21-07 1730	Scott Beasinger	2/22/07 0750
Scott Beasinger	2/22/07 0830	S Scarborough	2/23/07
		Laboratory	

Special Instructions: MS + MSD also taken

FedEx Airbill No.:

Sampler's Signature: Sherry McAdoo

TAT: ____ Standard ____ Rush Due: ___ Seals Intact? ____Y ____N Received Good Condition ____Y ____N ____Cold

White - Lab Copy Canary - Field Copy Pink - File Copy

00096119

Shaw® Shaw Environmental, Inc.

3010 Briarpark Drive, Suite 4N
Houston, TX 77042 (713) 996-4400

CHAIN-OF-CUSTODY

No. 10919

Laboratory Name: Shaw E&I Labs Address: 304 ~~312~~ Directors Drive, Knoxville, TN 37923 Contact: Robert Mayer 865-690-3211

Project Name: Longhorn Army Ammunition Plant Project Location: Karnack, TX

Project No.	Project Contact	Project Telephone No.
117591	Kay Everette	713-996-4421

Point of contact: Diane Meyer Telephone No. 713-996-4408

Project Manager/Supervisor: Praveen Srivastav

Item No.	Sample Number	Date	Time	Comp	Grab	Matrix	Sample Description, Location	Number of Containers	~~HNO3~~ HCl	Analysis and Method Desired (Indicate separate containers)	Remarks
1	SOWW05-FEB 2007	2/23/07	1040		X	GW	SOWW05	5 VOA 2 AG	X	SVOC 8270C, 8330, 8151	MS/MSD included
2	SOWW02-FEB 2007	2/23/07	1453		X	GW	SOWW05	2	X	SVOC 8270C	
3											
4											
5											
6											
7											
8											
9											
10											

Transfers Relinquished By (Signature)	Date/Time	Transfers Accepted By (Signature)	Date/Time	Special Instructions
J. Rhodes	2/23/07 @ 1800	Scott Beesinger	2/23/07 1800	
Scott Beesinger	2/22/07 1800	[signature] / SHAW TDL	2-26-07 1000	
				FedEx Airbill No.:
		Laboratory		Sampler's Signature: J. Rhodes

TAT: ____ Standard ____ Rush Due: ___ Seals Intact? ____ Y ____ N Received Good Condition ____ Y ____ N ____ Cold

White - Lab Copy Canary - Field Copy Pink - File Copy

00096120

Shaw® Shaw Environmental, Inc.

3010 Briarpark Drive, Suite 4N
Houston, TX 77042 (713) 996-4400

CHAIN-OF-CUSTODY

No. 10955

Laboratory Name: SHAW E&I Address: 304 DIRECTORS DR KNOXVILLE, TN 37923 Contact: R. MAYER 865-690-3211

Project Name: LONGHORN ARMY AMMUNITION PLANT Project Location: KARNACK, TX

Project No.: 117591 Project Contact: KAY EVERETT Project Telephone No.: 713-996-4421

Point of contact: DIANE MEYER Telephone No. 713-996-4408

Project Manager/Supervisor: PRAVEEN SRIVASTAV

Item No.	Sample Number	Date	Time	Comp	Grab	Matrix	Sample Description, Location	Number of Containers	Dehalogenated	Analysis and Method Desired (Indicate separate containers)						Remarks
1	17WW05-Feb2007	2-23-07	1533		✓	W	GW, 17WW05	2	✓	SOIL 0555						
2	17WW06-Feb2007	2-23-07	1630		✓	W	GW, 17WW06	2	✓	SOIL 0556						
3	130-Feb 2007	2-23-07	1047		✓	W	GW, 130	2	✓		SOIL 05687					Not on COC
4														KDD	2-26-07	
5																
6																
7																
8																
9																
10																

Transfers Relinquished By (Signature)	Date/Time	Transfers Accepted By (Signature)	Date/Time	Special Instructions
Sherry McFadden	2-23-07 1715	Scott Beasley	2/23/07 17:15	
Scott Beasley	2/23/07 17:15	SHAW TDL	2-26-07 1000	
				FedEx Airbill No.:
		Laboratory		Sampler's Signature: Sherry McFadden

TAT: ____ Standard ____ Rush Due: __ Seals Intact? ____ Y ____ N Received Good Condition ____ Y ____ N ____ Cold

White - Lab Copy Canary - Field Copy Pink - File Copy

00096121

Shaw® Shaw Environmental, Inc.

3010 Briarpark Drive, Suite 4N
Houston, TX 77042 (713) 996-4400

CHAIN-OF-CUSTODY

No. 10498

Laboratory Name: Shaw E&I | Address: 312 Directors Drive Knoxville, TN 37923 | Contact: Robert Mayer 865-690-3211

Project Name: Longhorn Army Ammunition Plant | Project Location: Karnack, TX

Project No.: 117591 | Project Contact: Kay Everette | Project Telephone No.: 713-996-4421

Point of contact: Diane Meyer | Telephone No.: 713-996-4408

Project Manager/Supervisor: Praveen Srivastav

Item No.	Sample Number	Date	Time	Comp	Grab	Matrix	Sample Description, Location	Number of Containers: Dehaloccoidies	Analysis and Method Desired (Indicate separate containers)	Remarks
1	17WW16-Feb2007	2-22-07	1038		✓	W	GW, Site 17	2		SDK 0557
2	17WW02-Feb2007	2-22-07	1418		✓	W	GW, Site 17	2		0558
3	17WW02-Feb2007	2-22-07	1418		✓	W	GW, Site 17	2		FD 559
4										
5										
6										
7										
8										
9										
10										

Transfers Relinquished By (Signature)	Date/Time	Transfers Accepted By (Signature)	Date/Time	Special Instructions
[signature]	2/23/07 8:22	Scott Beesinger	2/23/07 8:22	
Scott Beesinger	2/23/07 8:30	[signature] S/SHAW TOL	2-26-07 1000	
				FedEx Airbill No.:
		Laboratory		Sampler's Signature: [signature]

TAT: ____ Standard ____ Rush Due: ___ Seals Intact? ____ Y ____ N Received Good Condition ____ Y ____ N ____ Cold

White - Lab Copy Canary - Field Copy Pink - File Copy

00096122

Shaw® Shaw Environmental, Inc.

3010 Briarpark Drive, Suite 4N
Houston, TX 77042 (713) 996-4400

CHAIN-OF-CUSTODY

No. 10929

Laboratory Name: Shaw E&I Labs Address: 312 Directors Dr. Knoxville, TN. 37923 Contact: Robert Mayer 865-690-3211

Project Name: Longhorn Army Ammunition Plant Project Location: Karnack, TX

Project No.: 117591 Project Contact: Kay Everette Project Telephone No.: 713-996-4421

Point of contact: Diane Meyer Telephone No.: 713-996-4408

Project Manager/Supervisor: Praveen Srivastav

Item No.	Sample Number	Date	Time	Comp	Grab	Matrix	Sample Description, Location	Number of Containers	DEHALOCOCCOIDES	Remarks
1	47WW30-FEB2007	2/22/07	0941		X	W	47WW30	2	X	Sek 0560
2	LHSMW43-FEB2007	2/22/07	1100		X	W	LHSMW43	2	X	0561
3	SOWW06-FEB2007	2/22/07	1530		X	W	SOWW06	2	X	0562
4										
5										
6										
7										
8										
9										
10										

Analysis and Method Desired (Indicate separate containers)

Transfers Relinquished By (Signature)	Date/Time	Transfers Accepted By (Signature)	Date/Time
J. Bailey	2/22/07 @1800	Scott Beesinger	2/22/07 18:00
Scott Beesinger	2/23/07 08:30	SHAW TDL	2/26-07 1000

Special Instructions

FedEx Airbill No.:

Laboratory

Sampler's Signature: J. Bailey

TAT: ____ Standard ____ Rush Due: ___ Seals Intact? ____ Y ____ N Received Good Condition ____ Y ____ N ____ Cold

White - Lab Copy Canary - Field Copy Pink - File Copy

00096123

Shaw® Shaw Environmental, Inc.

3010 Briarpark Drive, Suite 4N
Houston, TX 77042 (713) 996-4400

CHAIN-OF-CUSTODY

No. 10951

Laboratory Name: Shaw E&I Address: 312 Directors Dr. Knoxville, TN 37923 Contact: Robert Mayer 865-690-3211

Project Name: Longhorn Army Ammunition Plant Project Location: Karnack, TX

Project No.: 117591 Project Contact: Kay Everette Project Telephone No.: 713-996-4421

Point of contact: Diane Meyer Telephone No.: 713-996-4408

Project Manager/Supervisor: Praveen Srivastav

Item No.	Sample Number	Date	Time	Comp	Grab	Matrix	Sample Description, Location	Number of Containers	Analysis and Method Desired (Indicate separate containers): Dehalococcoides							Remarks
1	29LOW38-Feb2007	2-22-07	0930		✓	W	Site 29, GW	2	✓							SEK 0563
2	29WW35Feb2007	2-22-07	1245		✓	W	Site 29, GW	2	✓							SEK 0564/0565 FD
3	29WWD6Feb2007	2-22-07	1500		✓	W	Site 29, GW	2	✓							SEK 0566
4																
5																
6																
7																
8																
9																
10																

Transfers Relinquished By (Signature)	Date/Time	Transfers Accepted By (Signature)	Date/Time	Special Instructions
Sherry McAdoo	2-22-07 1700	Scott Beesinger	2/22/07 17:00	
Scott Beesinger	2/23/07 08:30	[signature] Shaw TOC	2-26-07 1000	
				FedEx Airbill No.:
		Laboratory		Sampler's Signature: Sherry McAdoo

TAT: ____ Standard ____ Rush Due: ___ Seals Intact? ____ Y ____ N Received Good Condition ____ Y ____ N ____ Cold

White - Lab Copy Canary - Field Copy Pink - File Copy

00096124

Shaw® Shaw Environmental, Inc.

3010 Briarpark Drive, Suite 4N
Houston, TX 77042 (713) 996-4400

CHAIN-OF-CUSTODY

No. 10920

Laboratory Name: Shaw E&I Labs Address: 304 ~~312~~ Directors Drive, Knoxville, Tn. 37923 Contact: Robert Mayer 865-690-3211

Project Name: Longhorn Army Ammunition Plant Project Location: Karnack, TX.

Project No.: 117591 Project Contact: Kay Everette Project Telephone No.: 713-996-4421

Point of contact: Diane Meyer Telephone No.: 713-996-4408

Project Manager/Supervisor: Praveen Srivastav

Item No.	Sample Number	Date	Time	Comp	Grab	Matrix	Sample Description, Location	Number of Containers	DHC	Analysis and Method Desired (Indicate separate containers)							Remarks
1	58WW03	2/24/07	10:46		X	GW	58WW03	2	X								Sek 0568
2	29WW15	2/24/07	10:38		X	GW	29WW15	1	X								Sek 0569
3																	
4																	
5																	
6																	
7																	
8																	
9																	
10																	

Transfers Relinquished By (Signature)	Date/Time	Transfers Accepted By (Signature)	Date/Time
J Bolen / M. Allen	2/24/07 @1800	Scott Beesinger	2/24/07 18:00
Scott Beesinger	2/26/07 08:00		

Special Instructions

FedEx Airbill No.:

Laboratory: M Smith 2/27/07 Sampler's Signature: J. Bolen

TAT: ✓ Standard ____ Rush Due: ___ Seals Intact? ___ Y ___ N Received Good Condition ___ Y ___ N ___ Cold

White - Lab Copy Canary - Field Copy Pink - File Copy

Gulf Coast ACCUTEST Laboratories

IT'S ALL IN THE CHEMISTRY

05/08/08

Technical Report for

Shaw E & I, Inc.

Longhorn Army Ammunition Plant

117591

Accutest Job Number: T16432

Sampling Date: 02/21/07

Report to:

Shaw E & I, Inc.

jennifer.hoang@shawgrp.com

ATTN: Jennifer Hoang

Total number of pages in report: **143**

ACCUTEST LABORATORIES 50 YEARS 1956-2006

ACCREDITED IN ACCORDANCE WITH nelac

Test results contained within this data package meet the requirements of the National Environmental Laboratory Accreditation Conference and/or state specific certification programs as applicable.

Paul K Canevaro

Paul Canevaro
Laboratory Director

Client Service contact: Agnes Vicknair 713-271-4700

This report shall not be reproduced, except in its entirety, without the written approval of Accutest Laboratories. Test results relate only to samples analyzed.

Table of Contents

Section 1: Sample Summary 4
Section 2: Case Narrative/Conformance Summary 5
Section 3: Sample Results 9
3.1: T16432-1: LHSMW06-FEB2007 10
3.2: T16432-2: 17WW10-FEB2007 14
3.3: T16432-3: 17WW12-FEB2007 19
3.4: T16432-4: LHSM07-FEB2007 24
3.5: T16432-5: 47WW09-FEB2007 28
3.6: T16432-6: 29WW36-FEB2007 32
3.7: T16432-7: TRIP BLANK 36
Section 4: Misc. Forms 38
4.1: Chain of Custody 39
4.2: LRC Form 46
Section 5: GC/MS Volatiles - QC Data Summaries 50
5.1: Method Blank Summary 51
5.2: Blank Spike/Blank Spike Duplicate Summary 57
5.3: Blank Spike Summary 59
5.4: Matrix Spike/Matrix Spike Duplicate Summary 62
5.5: Instrument Performance Checks (BFB) 66
5.6: Internal Standard Area Summaries 71
5.7: Surrogate Recovery Summaries 74
5.8: Initial and Continuing Calibration Summaries 75
Section 6: General Chemistry - QC Data Summaries 94
6.1: Method Blank and Spike Results Summary 95
6.2: Duplicate Results Summary 96
6.3: Matrix Spike Results Summary 97
6.4: Matrix Spike Duplicate Results Summary 98
Section 7: Misc. Forms (Accutest Laboratories Southeast, Inc.) 99
7.1: Chain of Custody 100
Section 8: GC Volatiles - QC Data (Accutest Laboratories Southeast, Inc.) 102
8.1: Method Blank Summary 103
8.2: Blank Spike Summary 104
8.3: Matrix Spike Summary 105
8.4: Duplicate Summary 106
8.5: Initial and Continuing Calibration Summaries 107
Section 9: GC Semi-volatiles - QC Data (Accutest Laboratories Southeast, Inc.) 110
9.1: Method Blank Summary 111
9.2: Blank Spike Summary 113
9.3: Matrix Spike/Matrix Spike Duplicate Summary 115
9.4: Surrogate Recovery Summaries 116
9.5: GC Surrogate Retention Time Summaries 117
9.6: Initial and Continuing Calibration Summaries 119

Table of Contents

Section 10: General Chemistry - QC Data (Accutest Laboratories Southeast, Inc.) 137
10.1: Method Blank and Spike Results Summary 138
10.2: Duplicate Results Summary 139
10.3: Matrix Spike Results Summary 140
10.4: Inst QC GN24390: Perchlorate 141

Accutest LabLink@31213 11:02 08-May-2008

Sample Summary

Shaw E & I, Inc.

Job No: T16432

Longhorn Army Ammunition Plant
Project No: 117591

Sample Number	Collected Date	Time	By	Received	Matrix Code	Type	Client Sample ID
T16432-1	02/21/07	10:20	SM	02/23/07	AQ	Ground Water	LHSMW06-FEB2007
T16432-2	02/21/07	14:58	SM	02/23/07	AQ	Ground Water	17WW10-FEB2007
T16432-3	02/21/07	11:05	SM	02/23/07	AQ	Ground Water	17WW12-FEB2007
T16432-4	02/21/07	13:15	SM	02/23/07	AQ	Ground Water	LHSM07-FEB2007
T16432-5	02/21/07	14:22	SM	02/23/07	AQ	Ground Water	47WW09-FEB2007
T16432-6	02/21/07	15:15	SM	02/23/07	AQ	Ground Water	29WW36-FEB2007
T16432-7	02/21/07	00:00	SM	02/23/07	AQ	Trip Blank Water	TRIP BLANK

SAMPLE DELIVERY GROUP CASE NARRATIVE

Client: Shaw E & I, Inc. **Job No** T16432

Site: Longhorn Army Ammunition Plant **Report Date** 3/9/2007 4:18:09 PM

6 Samples and 1 Trip Blank were collected on 02/21/2007 and were received at Accutest on 02/23/2007 properly preserved, at 4.8 Deg. C and intact. These Samples received an Accutest job number of T16432. A listing of the Laboratory Sample ID, Client Sample ID and dates of collection are presented in the Results Summary Section of this report.

Except as noted below, all method specified calibrations and quality control performance criteria were met for this job. For more information, please refer to QC summary pages.

Volatiles by GCMS By Method SW846 8260B

Matrix AQ **Batch ID:** VF2306

- All samples were analyzed within the recommended method holding time.
- Sample(s) T16411-10MS, T16411-10MSD were used as the QC samples indicated.
- All method blanks for this batch meet method specific criteria.
- Matrix Spike Recovery(s) for Styrene are outside control limits. Probable cause due to matrix interference.
- Matrix Spike Duplicate Recovery(s) for Styrene are outside control limits. Probable cause due to matrix interference.

Matrix AQ **Batch ID:** VY1139

- All samples were analyzed within the recommended method holding time.
- All method blanks for this batch meet method specific criteria.
- T16432-1 for 4-Bromofluorobenzene: Outside of control limits biased high. There were no target compounds associated with this surrogate.
- T16432-7 for 4-Bromofluorobenzene: Outside of control limits biased high. There were no target compounds associated with this surrogate.
- VY1139-MB for 4-Bromofluorobenzene: Outside control limits biased high. There are no target compounds associated with this surrogate.

Matrix AQ **Batch ID:** VY1140

- All samples were analyzed within the recommended method holding time.
- Sample(s) T16437-6MS, T16437-6MSD were used as the QC samples indicated.
- All method blanks for this batch meet method specific criteria.
- T16432-2 for 4-Bromofluorobenzene: Outside of control limits biased high. There were no target compounds associated with this surrogate.
- T16432-3 for 4-Bromofluorobenzene: Outside of control limits biased high. There were no target compounds associated with this surrogate.

Volatiles by GC By Method RSKSOP-147/175

Matrix AQ **Batch ID:** F:GXY995

- Gasses Analysis performed at Accutest Laboratories, Orlando, FL.

Extractables by GC By Method SW846 8330A

Matrix AQ **Batch ID:** F:OP19677

- T16432-2: Sample extracted beyond hold time. Analysis performed at Accutest Laboratories, Orlando, FL.
- T16432-3: Sample extracted beyond hold time. Analysis performed at Accutest Laboratories, Orlando, FL.

Wet Chemistry By Method EPA 120.1

Matrix AQ **Batch ID:** F:R17941

- Specific Conductivity: Analysis performed at Accutest Laboratories, Orlando, FL.

Matrix AQ **Batch ID:** GN11341

- All samples were analyzed within the recommended method holding time.
- All method blanks for this batch meet method specific criteria.
- Sample(s) T16411-10DUP were used as the QC samples for Specific Conductivity.

Wet Chemistry By Method EPA 150.1/9040

Matrix AQ **Batch ID:** GN11306

- Sample(s) T16432-4DUP were used as the QC samples for pH.

Wet Chemistry By Method EPA 310.1

Matrix AQ **Batch ID:** GN11336

- All samples were analyzed within the recommended method holding time.
- All method blanks for this batch meet method specific criteria.
- Sample(s) T16411-10DUP, T16411-10MS were used as the QC samples for Alkalinity, Total as CaCO3.

Wet Chemistry By Method EPA 314

Matrix AQ **Batch ID:** F:GP9043

- Perchlorate Analysis performed at Accutest Laboratories, Orlando, FL.

Wet Chemistry By Method EPA 325.3

Matrix AQ **Batch ID:** GN11331

- All samples were analyzed within the recommended method holding time.
- All method blanks for this batch meet method specific criteria.

Wet Chemistry By Method EPA 353.2

Matrix AQ **Batch ID:** GN11288

- All method blanks for this batch meet method specific criteria.
- Sample(s) T16432-1DUP, T16432-1MS were used as the QC samples for Nitrogen, Nitrite.

Matrix AQ **Batch ID:** GN11291

- All method blanks for this batch meet method specific criteria.
- Sample(s) T16411-10DUP, T16411-10MS were used as the QC samples for Nitrogen, Nitrate + Nitrite.

Wet Chemistry By Method EPA 375.3

Matrix AQ **Batch ID:** GN11356

- All samples were analyzed within the recommended method holding time.
- All method blanks for this batch meet method specific criteria.
- Sample(s) T16411-10DUP, T16411-10MS were used as the QC samples for Sulfate.

Wet Chemistry By Method EPA 376.1

Matrix	AQ	Batch ID:	GN11286

- All samples were analyzed within the recommended method holding time.
- All method blanks for this batch meet method specific criteria.
- Sample(s) T16432-6DUP were used as the QC samples for Sulfide.

Wet Chemistry By Method EPA 415.1/9060

Matrix	AQ	Batch ID:	GN11304

- All samples were analyzed within the recommended method holding time.
- All method blanks for this batch meet method specific criteria.
- Sample(s) T16445-18DUP, T16445-18MS were used as the QC samples for Total Organic Carbon.

Wet Chemistry By Method SM18 4500CO2D

Matrix	AQ	Batch ID:	GN11382

- Co2 was calculted from the pH and Alkalinty results.

Wet Chemistry By Method SM18 4500NO3E/NO2B

Matrix	AQ	Batch ID:	R15449

- Nitrogen, Nitrate: Calculated as: (Nitrogen, Nitrate + Nitrite) - (Nitrogen, Nitrite)

Accutest Laboratories Gulf Coast (ALGC) certifies that this report meets the project requirements for analytical data produced for the samples as received at ALGC and as stated on the COC. ALGC certifies that the data meets the Data QualityObjectives for precision, accuracy and completeness as specified in the ALGC Quality Manual except as noted above. This report is to be used in its entirety. ALGC is not responsible for any assumptions of data quality if partial data packages are used

SAMPLE DELIVERY GROUP CASE NARRATIVE

Client: Accutest Laboratories Gulf Coast, Inc. **Job No:** T16432

Site: ITTXHO: Longhorn Army Ammunition Plant **Report Date:** 3/9/2007 10:35:36 AM

6 Samples were collected on 02/21/2007 and were received at Accutest SE on 02/28/2007 properly preserved, at 1.8 Deg. C and intact. These Samples received an Accutest job number of T16432. A listing of the Laboratory Sample ID, Client Sample ID and dates of collection are presented in the Results Summary Section of this report.

Except as noted below, all method specified calibrations and quality control performance criteria were met for this job. For more information, please refer to QC summary pages.

Volatiles by GC by Method RSKSOP-147/175

Matrix: AQ **Batch ID:** GXY995

All method blanks for this batch meet method specific criteria.

Samples T16432-4DUP, T16432-6MS were used as the QC samples indicated.

The following samples were run outside of holding time for method RSKSOP-147/175: T16432-1, T16432-2, T16432-3, T16432-4, T16432-5, T16432-6.

Extractables by GC by Method SW846 8330A

Matrix: AQ **Batch ID:** OP19677

All samples were analyzed within the recommended method holding time.

All method blanks for this batch meet method specific criteria.

Samples F47539-3MS, F47539-3MSD were used as the QC samples indicated.

The following samples were extracted outside of holding time for method SW846 8330A: T16432-2, T16432-3. Samples extracted beyond hold time.

T16432-2, T16432-3: Sample extracted beyond hold time.

Wet Chemistry by Method EPA 314

Matrix: AQ **Batch ID:** GP9043

All samples were prepped within the recommended method holding time.

All samples were analyzed within the recommended method holding time.

All method blanks for this batch meet method specific criteria.

Samples T16411-10DUP, T16411-10MS were used as the QC samples for Perchlorate.

Accutest Laboratories Southeast (ALSE) certifies that this report meets the project requirements for analytical data produced for the samples as received at ALSE and as stated on the COC. ALSE certifies that the data meets the Data Quality Objectives for precision, accuracy and completeness as specified in the ALSE Quality Manual except as noted above. This report is to be used in its entirety. ALSE is not responsible for any assumptions of data quality if partial data packages are used.

Narrative prepared by:

_____ Date: March 9, 2007

Ellen Pampel, Inorganic QA (signature on file)

Friday, March 09, 2007

Sample Results

Report of Analysis

Accutest LabLink@31213 11:02 08-May-2008

Report of Analysis

Client Sample ID:	LHSMW06-FEB2007		
Lab Sample ID:	T16432-1	**Date Sampled:**	02/21/07
Matrix:	AQ - Ground Water	**Date Received:**	02/23/07
Method:	SW846 8260B	**Percent Solids:**	n/a
Project:	Longhorn Army Ammunition Plant		

	File ID	DF	Analyzed	By	Prep Date	Prep Batch	Analytical Batch
Run #1	Y0010444.D	1	02/27/07	JH	n/a	n/a	VY1139
Run #2							

	Purge Volume
Run #1	5.0 ml
Run #2	

VOA TCL List

CAS No.	Compound	Result	RL	MDL	Units	Q
67-64-1	Acetone	2.8 U	50	2.8	ug/l	
71-43-2	Benzene	0.23 U	2.0	0.23	ug/l	
75-27-4	Bromodichloromethane	0.33 U	2.0	0.33	ug/l	
75-25-2	Bromoform	0.65 U	2.0	0.65	ug/l	
108-90-7	Chlorobenzene	0.54 U	2.0	0.54	ug/l	
75-00-3	Chloroethane	0.46 U	2.0	0.46	ug/l	
67-66-3	Chloroform	0.66 U	2.0	0.66	ug/l	
75-15-0	Carbon disulfide	0.62 U	2.0	0.62	ug/l	
56-23-5	Carbon tetrachloride	0.52 U	2.0	0.52	ug/l	
75-34-3	1,1-Dichloroethane	1.7	2.0	0.52	ug/l	J
75-35-4	1,1-Dichloroethylene	0.68 U	2.0	0.68	ug/l	
107-06-2	1,2-Dichloroethane	0.53 U	2.0	0.53	ug/l	
78-87-5	1,2-Dichloropropane	0.59 U	2.0	0.59	ug/l	
124-48-1	Dibromochloromethane	0.68 U	2.0	0.68	ug/l	
156-59-2	cis-1,2-Dichloroethylene	5.1	2.0	0.83	ug/l	
10061-01-5	cis-1,3-Dichloropropene	0.59 U	2.0	0.59	ug/l	
156-60-5	trans-1,2-Dichloroethylene	0.75 U	2.0	0.75	ug/l	
10061-02-6	trans-1,3-Dichloropropene	0.61 U	2.0	0.61	ug/l	
100-41-4	Ethylbenzene	0.48 U	2.0	0.48	ug/l	
591-78-6	2-Hexanone	1.9 U	10	1.9	ug/l	
108-10-1	4-Methyl-2-pentanone	7.3 U	10	7.3	ug/l	
74-83-9	Methyl bromide	0.47 U	2.0	0.47	ug/l	
74-87-3	Methyl chloride	0.60 U	2.0	0.60	ug/l	
75-09-2	Methylene chloride	0.67 U	5.0	0.67	ug/l	
78-93-3	Methyl ethyl ketone	3.0 U	10	3.0	ug/l	
100-42-5	Styrene	0.50 U	2.0	0.50	ug/l	
71-55-6	1,1,1-Trichloroethane	0.37 U	2.0	0.37	ug/l	
79-34-5	1,1,2,2-Tetrachloroethane	0.46 U	2.0	0.46	ug/l	
79-00-5	1,1,2-Trichloroethane	0.66 U	2.0	0.66	ug/l	
127-18-4	Tetrachloroethylene	0.74 U	2.0	0.74	ug/l	
108-88-3	Toluene	0.54 U	2.0	0.54	ug/l	
79-01-6	Trichloroethylene	0.77	2.0	0.63	ug/l	J

U = Not detected MDL - Method Detection Limit
RL = Reporting Limit
E = Indicates value exceeds calibration range
J = Indicates an estimated value
B = Indicates analyte found in associated method blank
N = Indicates presumptive evidence of a compound

Report of Analysis

Client Sample ID:	LHSMW06-FEB2007		
Lab Sample ID:	T16432-1	**Date Sampled:**	02/21/07
Matrix:	AQ - Ground Water	**Date Received:**	02/23/07
Method:	SW846 8260B	**Percent Solids:**	n/a
Project:	Longhorn Army Ammunition Plant		

VOA TCL List

CAS No.	Compound	Result	RL	MDL	Units	Q
75-01-4	Vinyl chloride	0.32 U	2.0	0.32	ug/l	
1330-20-7	Xylene (total)	1.1 U	6.0	1.1	ug/l	

CAS No.	Surrogate Recoveries	Run# 1	Run# 2	Limits
1868-53-7	Dibromofluoromethane	121%		73-139%
17060-07-0	1,2-Dichloroethane-D4	117%		66-139%
2037-26-5	Toluene-D8	133%		77-148%
460-00-4	4-Bromofluorobenzene	158% [a]		84-150%

(a) Outside of control limits biased high. There were no target compounds associated with this surrogate.

U = Not detected MDL - Method Detection Limit
RL = Reporting Limit
E = Indicates value exceeds calibration range
J = Indicates an estimated value
B = Indicates analyte found in associated method blank
N = Indicates presumptive evidence of a compound

Accutest LabLink@31213 11:02 08-May-2008

Report of Analysis

Client Sample ID:	LHSMW06-FEB2007		
Lab Sample ID:	T16432-1	**Date Sampled:**	02/21/07
Matrix:	AQ - Ground Water	**Date Received:**	02/23/07
Method:	RSKSOP-147/175	**Percent Solids:**	n/a
Project:	Longhorn Army Ammunition Plant		

	File ID	DF	Analyzed	By	Prep Date	Prep Batch	Analytical Batch
Run #1 [a]	XY025312.D	1	03/07/07	AFL	n/a	n/a	F:GXY995
Run #2							

CAS No.	Compound	Result	RL	MDL	Units	Q
74-82-8	Methane	17.0	0.50	0.30	ug/l	
74-84-0	Ethane	0.60 U	1.0	0.60	ug/l	
74-85-1	Ethene	0.80 U	1.0	0.80	ug/l	

(a) Analysis performed at Accutest Laboratories, Orlando, FL.

U = Not detected MDL - Method Detection Limit
RL = Reporting Limit
E = Indicates value exceeds calibration range
J = Indicates an estimated value
B = Indicates analyte found in associated method blank
N = Indicates presumptive evidence of a compound

Accutest LabLink@31213 11:02 08-May-2008

Report of Analysis

Client Sample ID:	LHSMW06-FEB2007		
Lab Sample ID:	T16432-1	**Date Sampled:**	02/21/07
Matrix:	AQ - Ground Water	**Date Received:**	02/23/07
		Percent Solids:	n/a
Project:	Longhorn Army Ammunition Plant		

General Chemistry

Analyte	Result	RL	MDL	Units	DF	Analyzed	By	Method
Perchlorate by IC								
Perchlorate [a]	4.0 U	10	4.0	ug/l	1	03/01/07 18:59	AFL	EPA 314
Alkalinity, Total as CaCO3	407	5.0	0.30	mg/l	1	03/03/07 08:15	EB	EPA 310.1
Carbon Dioxide	510	5.0		mg/l	1	03/09/07	RM	SM18 4500CO2D
Chloride	513	1.0	0.57	mg/l	1	03/02/07 12:30	EB	EPA 325.3
Nitrogen, Nitrate [b]	< 0.10	0.10	0.0050	mg/l	1	02/26/07 09:23	LN	SM18 4500NO3E/NO2B
Nitrogen, Nitrate + Nitrite	0.020 B	0.050	0.0050	mg/l	1	02/26/07 09:23	LN	EPA 353.2
Nitrogen, Nitrite	0.0030 U	0.050	0.0030	mg/l	1	02/23/07 11:30	LN	EPA 353.2
Specific Conductivity [a]	2800	0.50	0.50	umhos/cm	1	03/06/07	AFL	EPA 120.1
Sulfate	398	40	2.6	mg/l	4	03/06/07 18:00	EB	EPA 375.3
Sulfide	U	0.20		mg/l	1	02/24/07 10:00	LN	EPA 376.1
Total Organic Carbon	5.0	1.0	0.092	mg/l	1	02/27/07 09:10	LN	EPA 415.1/9060
pH	6.2			su	1	02/27/07 10:30	EB	EPA 150.1/9040

(a) Analysis performed at Accutest Laboratories, Orlando, FL.
(b) Calculated as: (Nitrogen, Nitrate + Nitrite) - (Nitrogen, Nitrite)

RL = Reporting Limit
MDL = Method Detection Limit
U = Indicates a result < MDL
B = Indicates a result > = MDL but < RL

Accutest LabLink@31213 11:02 08-May-2008

Report of Analysis

Client Sample ID:	17WW10-FEB2007		
Lab Sample ID:	T16432-2	**Date Sampled:**	02/21/07
Matrix:	AQ - Ground Water	**Date Received:**	02/23/07
Method:	SW846 8260B	**Percent Solids:**	n/a
Project:	Longhorn Army Ammunition Plant		

	File ID	DF	Analyzed	By	Prep Date	Prep Batch	Analytical Batch
Run #1	Y0010452.D	1	02/28/07	JH	n/a	n/a	VY1140
Run #2							

	Purge Volume
Run #1	5.0 ml
Run #2	

VOA TCL List

CAS No.	Compound	Result	RL	MDL	Units	Q
67-64-1	Acetone	2.8 U	50	2.8	ug/l	
71-43-2	Benzene	0.23 U	2.0	0.23	ug/l	
75-27-4	Bromodichloromethane	0.33 U	2.0	0.33	ug/l	
75-25-2	Bromoform	0.65 U	2.0	0.65	ug/l	
108-90-7	Chlorobenzene	0.54 U	2.0	0.54	ug/l	
75-00-3	Chloroethane	0.46 U	2.0	0.46	ug/l	
67-66-3	Chloroform	0.66 U	2.0	0.66	ug/l	
75-15-0	Carbon disulfide	0.62 U	2.0	0.62	ug/l	
56-23-5	Carbon tetrachloride	0.52 U	2.0	0.52	ug/l	
75-34-3	1,1-Dichloroethane	0.52 U	2.0	0.52	ug/l	
75-35-4	1,1-Dichloroethylene	0.68 U	2.0	0.68	ug/l	
107-06-2	1,2-Dichloroethane	0.53 U	2.0	0.53	ug/l	
78-87-5	1,2-Dichloropropane	0.59 U	2.0	0.59	ug/l	
124-48-1	Dibromochloromethane	0.68 U	2.0	0.68	ug/l	
156-59-2	cis-1,2-Dichloroethylene	0.83 U	2.0	0.83	ug/l	
10061-01-5	cis-1,3-Dichloropropene	0.59 U	2.0	0.59	ug/l	
156-60-5	trans-1,2-Dichloroethylene	0.75 U	2.0	0.75	ug/l	
10061-02-6	trans-1,3-Dichloropropene	0.61 U	2.0	0.61	ug/l	
100-41-4	Ethylbenzene	0.48 U	2.0	0.48	ug/l	
591-78-6	2-Hexanone	1.9 U	10	1.9	ug/l	
108-10-1	4-Methyl-2-pentanone	7.3 U	10	7.3	ug/l	
74-83-9	Methyl bromide	0.47 U	2.0	0.47	ug/l	
74-87-3	Methyl chloride	0.60 U	2.0	0.60	ug/l	
75-09-2	Methylene chloride	0.67 U	5.0	0.67	ug/l	
78-93-3	Methyl ethyl ketone	3.0 U	10	3.0	ug/l	
100-42-5	Styrene	0.50 U	2.0	0.50	ug/l	
71-55-6	1,1,1-Trichloroethane	0.37 U	2.0	0.37	ug/l	
79-34-5	1,1,2,2-Tetrachloroethane	0.46 U	2.0	0.46	ug/l	
79-00-5	1,1,2-Trichloroethane	0.66 U	2.0	0.66	ug/l	
127-18-4	Tetrachloroethylene	0.74 U	2.0	0.74	ug/l	
108-88-3	Toluene	0.54 U	2.0	0.54	ug/l	
79-01-6	Trichloroethylene	0.63 U	2.0	0.63	ug/l	

U = Not detected MDL - Method Detection Limit
RL = Reporting Limit
E = Indicates value exceeds calibration range

J = Indicates an estimated value
B = Indicates analyte found in associated method blank
N = Indicates presumptive evidence of a compound

Report of Analysis

Client Sample ID:	17WW10-FEB2007		
Lab Sample ID:	T16432-2	**Date Sampled:**	02/21/07
Matrix:	AQ - Ground Water	**Date Received:**	02/23/07
Method:	SW846 8260B	**Percent Solids:**	n/a
Project:	Longhorn Army Ammunition Plant		

VOA TCL List

CAS No.	Compound	Result	RL	MDL	Units	Q
75-01-4	Vinyl chloride	0.32 U	2.0	0.32	ug/l	
1330-20-7	Xylene (total)	1.1 U	6.0	1.1	ug/l	

CAS No.	Surrogate Recoveries	Run# 1	Run# 2	Limits
1868-53-7	Dibromofluoromethane	124%		73-139%
17060-07-0	1,2-Dichloroethane-D4	122%		66-139%
2037-26-5	Toluene-D8	129%		77-148%
460-00-4	4-Bromofluorobenzene	153% [a]		84-150%

(a) Outside of control limits biased high. There were no target compounds associated with this surrogate.

U = Not detected MDL - Method Detection Limit
RL = Reporting Limit
E = Indicates value exceeds calibration range
J = Indicates an estimated value
B = Indicates analyte found in associated method blank
N = Indicates presumptive evidence of a compound

Accutest LabLink@31213 11:02 08-May-2008

Report of Analysis

Client Sample ID:	17WW10-FEB2007		
Lab Sample ID:	T16432-2	**Date Sampled:**	02/21/07
Matrix:	AQ - Ground Water	**Date Received:**	02/23/07
Method:	RSKSOP-147/175	**Percent Solids:**	n/a
Project:	Longhorn Army Ammunition Plant		

	File ID	DF	Analyzed	By	Prep Date	Prep Batch	Analytical Batch
Run #1 [a]	XY025313.D	1	03/07/07	AFL	n/a	n/a	F:GXY995
Run #2							

CAS No.	Compound	Result	RL	MDL	Units	Q
74-82-8	Methane	20.9	0.50	0.30	ug/l	
74-84-0	Ethane	0.60 U	1.0	0.60	ug/l	
74-85-1	Ethene	0.80 U	1.0	0.80	ug/l	

(a) Analysis performed at Accutest Laboratories, Orlando, FL.

U = Not detected MDL - Method Detection Limit
RL = Reporting Limit
E = Indicates value exceeds calibration range
J = Indicates an estimated value
B = Indicates analyte found in associated method blank
N = Indicates presumptive evidence of a compound

Accutest LabLink@31213 11:02 08-May-2008

Report of Analysis

Client Sample ID:	17WW10-FEB2007		
Lab Sample ID:	T16432-2	**Date Sampled:**	02/21/07
Matrix:	AQ - Ground Water	**Date Received:**	02/23/07
Method:	SW846 8330A SW846 3535A	**Percent Solids:**	n/a
Project:	Longhorn Army Ammunition Plant		

	File ID	DF	Analyzed	By	Prep Date	Prep Batch	Analytical Batch
Run #1 [a]	GG020210.D	1	03/02/07	AFL	03/01/07	F:OP19677	F:GGG906
Run #2							

	Initial Volume	Final Volume
Run #1	1000 ml	10.0 ml
Run #2		

CAS No.	Compound	Result	RL	MDL	Units	Q
2691-41-0	HMX	0.060 U	0.20	0.060	ug/l	
121-82-4	RDX	0.075 U	0.20	0.075	ug/l	
99-65-0	1,3-Dinitrobenzene	0.070 U	0.20	0.070	ug/l	
606-20-2	2,6-Dinitrotoluene	0.065 U	0.20	0.065	ug/l	
121-14-2	2,4-Dinitrotoluene	0.075 U	0.20	0.075	ug/l	
35572-78-2	2-amino-4,6-Dinitrotoluene	0.070 U	0.20	0.070	ug/l	
19406-51-0	4-amino-2,6-Dinitrotoluene	0.080 U	0.20	0.080	ug/l	
98-95-3	Nitrobenzene	0.060 U	0.20	0.060	ug/l	
88-72-2	o-Nitrotoluene	0.060 U	0.20	0.060	ug/l	
99-08-1	m-Nitrotoluene	0.075 U	0.20	0.075	ug/l	
99-99-0	p-Nitrotoluene	0.075 U	0.20	0.075	ug/l	
479-45-8	Tetryl	0.075 U	0.20	0.075	ug/l	
99-35-4	1,3,5-Trinitrobenzene	0.095 U	0.20	0.095	ug/l	
118-96-7	2,4,6-Trinitrotoluene	0.080 U	0.20	0.080	ug/l	

CAS No.	Surrogate Recoveries	Run# 1	Run# 2	Limits
610-39-9	3,4-Dinitrotoluene	95%		70-136%

(a) Sample extracted beyond hold time. Analysis performed at Accutest Laboratories, Orlando, FL.

U = Not detected MDL - Method Detection Limit
RL = Reporting Limit
E = Indicates value exceeds calibration range
J = Indicates an estimated value
B = Indicates analyte found in associated method blank
N = Indicates presumptive evidence of a compound

Accutest LabLink@31213 11:02 08-May-2008

Report of Analysis

Client Sample ID:	17WW10-FEB2007		
Lab Sample ID:	T16432-2	**Date Sampled:**	02/21/07
Matrix:	AQ - Ground Water	**Date Received:**	02/23/07
		Percent Solids:	n/a
Project:	Longhorn Army Ammunition Plant		

General Chemistry

Analyte	Result	RL	MDL	Units	DF	Analyzed	By	Method
Perchlorate by IC								
Perchlorate [a]	4.0 U	10	4.0	ug/l	1	03/01/07 19:14	AFL	EPA 314
Alkalinity, Total as CaCO3	140	5.0	0.30	mg/l	1	03/03/07 08:15	EB	EPA 310.1
Carbon Dioxide	280	5.0		mg/l	1	03/09/07	RM	SM18 4500CO2D
Chloride	1030	1.0	0.57	mg/l	1	03/02/07 12:30	EB	EPA 325.3
Nitrogen, Nitrate [b]	0.30	0.10	0.0050	mg/l	1	02/26/07 09:23	LN	SM18 4500NO3E/NO2B
Nitrogen, Nitrate + Nitrite	0.30	0.050	0.0050	mg/l	1	02/26/07 09:23	LN	EPA 353.2
Nitrogen, Nitrite	0.0030 U	0.050	0.0030	mg/l	1	02/23/07 11:30	LN	EPA 353.2
Specific Conductivity [a]	2670	0.50	0.50	umhos/cm	1	03/06/07	AFL	EPA 120.1
Sulfate	142	40	2.6	mg/l	4	03/06/07 18:00	EB	EPA 375.3
Sulfide	U	0.20		mg/l	1	02/24/07 10:00	LN	EPA 376.1
Total Organic Carbon	4.0	1.0	0.092	mg/l	1	02/27/07 09:10	LN	EPA 415.1/9060
pH	6.0			su	1	02/27/07 10:30	EB	EPA 150.1/9040

(a) Analysis performed at Accutest Laboratories, Orlando, FL.
(b) Calculated as: (Nitrogen, Nitrate + Nitrite) - (Nitrogen, Nitrite)

RL = Reporting Limit
MDL = Method Detection Limit
U = Indicates a result < MDL
B = Indicates a result > = MDL but < RL

Accutest LabLink@31213 11:02 08-May-2008

Report of Analysis

Client Sample ID:	17WW12-FEB2007		
Lab Sample ID:	T16432-3	**Date Sampled:**	02/21/07
Matrix:	AQ - Ground Water	**Date Received:**	02/23/07
Method:	SW846 8260B	**Percent Solids:**	n/a
Project:	Longhorn Army Ammunition Plant		

	File ID	DF	Analyzed	By	Prep Date	Prep Batch	Analytical Batch
Run #1	Y0010453.D	1	02/28/07	JH	n/a	n/a	VY1140
Run #2							

	Purge Volume
Run #1	5.0 ml
Run #2	

VOA TCL List

CAS No.	Compound	Result	RL	MDL	Units	Q
67-64-1	Acetone	2.8 U	50	2.8	ug/l	
71-43-2	Benzene	0.23 U	2.0	0.23	ug/l	
75-27-4	Bromodichloromethane	0.33 U	2.0	0.33	ug/l	
75-25-2	Bromoform	0.65 U	2.0	0.65	ug/l	
108-90-7	Chlorobenzene	0.54 U	2.0	0.54	ug/l	
75-00-3	Chloroethane	0.46 U	2.0	0.46	ug/l	
67-66-3	Chloroform	0.66 U	2.0	0.66	ug/l	
75-15-0	Carbon disulfide	0.62 U	2.0	0.62	ug/l	
56-23-5	Carbon tetrachloride	0.52 U	2.0	0.52	ug/l	
75-34-3	1,1-Dichloroethane	0.52 U	2.0	0.52	ug/l	
75-35-4	1,1-Dichloroethylene	0.68 U	2.0	0.68	ug/l	
107-06-2	1,2-Dichloroethane	0.53 U	2.0	0.53	ug/l	
78-87-5	1,2-Dichloropropane	0.59 U	2.0	0.59	ug/l	
124-48-1	Dibromochloromethane	0.68 U	2.0	0.68	ug/l	
156-59-2	cis-1,2-Dichloroethylene	0.83 U	2.0	0.83	ug/l	
10061-01-5	cis-1,3-Dichloropropene	0.59 U	2.0	0.59	ug/l	
156-60-5	trans-1,2-Dichloroethylene	0.75 U	2.0	0.75	ug/l	
10061-02-6	trans-1,3-Dichloropropene	0.61 U	2.0	0.61	ug/l	
100-41-4	Ethylbenzene	0.48 U	2.0	0.48	ug/l	
591-78-6	2-Hexanone	1.9 U	10	1.9	ug/l	
108-10-1	4-Methyl-2-pentanone	7.3 U	10	7.3	ug/l	
74-83-9	Methyl bromide	0.47 U	2.0	0.47	ug/l	
74-87-3	Methyl chloride	0.60 U	2.0	0.60	ug/l	
75-09-2	Methylene chloride	0.67 U	5.0	0.67	ug/l	
78-93-3	Methyl ethyl ketone	3.0 U	10	3.0	ug/l	
100-42-5	Styrene	0.50 U	2.0	0.50	ug/l	
71-55-6	1,1,1-Trichloroethane	0.37 U	2.0	0.37	ug/l	
79-34-5	1,1,2,2-Tetrachloroethane	0.46 U	2.0	0.46	ug/l	
79-00-5	1,1,2-Trichloroethane	0.66 U	2.0	0.66	ug/l	
127-18-4	Tetrachloroethylene	0.74 U	2.0	0.74	ug/l	
108-88-3	Toluene	0.54 U	2.0	0.54	ug/l	
79-01-6	Trichloroethylene	0.63 U	2.0	0.63	ug/l	

U = Not detected MDL - Method Detection Limit
RL = Reporting Limit
E = Indicates value exceeds calibration range
J = Indicates an estimated value
B = Indicates analyte found in associated method blank
N = Indicates presumptive evidence of a compound

Report of Analysis

Client Sample ID:	17WW12-FEB2007		
Lab Sample ID:	T16432-3	**Date Sampled:**	02/21/07
Matrix:	AQ - Ground Water	**Date Received:**	02/23/07
Method:	SW846 8260B	**Percent Solids:**	n/a
Project:	Longhorn Army Ammunition Plant		

VOA TCL List

CAS No.	Compound	Result	RL	MDL	Units	Q
75-01-4	Vinyl chloride	0.32 U	2.0	0.32	ug/l	
1330-20-7	Xylene (total)	1.1 U	6.0	1.1	ug/l	

CAS No.	Surrogate Recoveries	Run# 1	Run# 2	Limits
1868-53-7	Dibromofluoromethane	121%		73-139%
17060-07-0	1,2-Dichloroethane-D4	118%		66-139%
2037-26-5	Toluene-D8	132%		77-148%
460-00-4	4-Bromofluorobenzene	154% [a]		84-150%

(a) Outside of control limits biased high. There were no target compounds associated with this surrogate.

U = Not detected MDL - Method Detection Limit
RL = Reporting Limit
E = Indicates value exceeds calibration range
J = Indicates an estimated value
B = Indicates analyte found in associated method blank
N = Indicates presumptive evidence of a compound

Accutest LabLink@31213 11:02 08-May-2008

Report of Analysis

Client Sample ID:	17WW12-FEB2007		
Lab Sample ID:	T16432-3	**Date Sampled:**	02/21/07
Matrix:	AQ - Ground Water	**Date Received:**	02/23/07
Method:	RSKSOP-147/175	**Percent Solids:**	n/a
Project:	Longhorn Army Ammunition Plant		

	File ID	DF	Analyzed	By	Prep Date	Prep Batch	Analytical Batch
Run #1 [a]	XY025314.D	1	03/07/07	AFL	n/a	n/a	F:GXY995
Run #2							

CAS No.	Compound	Result	RL	MDL	Units	Q
74-82-8	Methane	57.1	0.50	0.30	ug/l	
74-84-0	Ethane	0.60 U	1.0	0.60	ug/l	
74-85-1	Ethene	0.80 U	1.0	0.80	ug/l	

(a) Analysis performed at Accutest Laboratories, Orlando, FL.

U = Not detected MDL - Method Detection Limit
RL = Reporting Limit
E = Indicates value exceeds calibration range
J = Indicates an estimated value
B = Indicates analyte found in associated method blank
N = Indicates presumptive evidence of a compound

Accutest LabLink@31213 11:02 08-May-2008

Report of Analysis

Client Sample ID:	17WW12-FEB2007		
Lab Sample ID:	T16432-3	**Date Sampled:**	02/21/07
Matrix:	AQ - Ground Water	**Date Received:**	02/23/07
Method:	SW846 8330A SW846 3535A	**Percent Solids:**	n/a
Project:	Longhorn Army Ammunition Plant		

	File ID	DF	Analyzed	By	Prep Date	Prep Batch	Analytical Batch
Run #1 [a]	GG020211.D	1	03/02/07	AFL	03/01/07	F:OP19677	F:GGG906
Run #2							

	Initial Volume	Final Volume
Run #1	1010 ml	10.0 ml
Run #2		

CAS No.	Compound	Result	RL	MDL	Units	Q
2691-41-0	HMX	0.059 U	0.20	0.059	ug/l	
121-82-4	RDX	0.074 U	0.20	0.074	ug/l	
99-65-0	1,3-Dinitrobenzene	0.069 U	0.20	0.069	ug/l	
606-20-2	2,6-Dinitrotoluene	0.064 U	0.20	0.064	ug/l	
121-14-2	2,4-Dinitrotoluene	0.074 U	0.20	0.074	ug/l	
35572-78-2	2-amino-4,6-Dinitrotoluene	0.069 U	0.20	0.069	ug/l	
19406-51-0	4-amino-2,6-Dinitrotoluene	0.079 U	0.20	0.079	ug/l	
98-95-3	Nitrobenzene	0.059 U	0.20	0.059	ug/l	
88-72-2	o-Nitrotoluene	0.059 U	0.20	0.059	ug/l	
99-08-1	m-Nitrotoluene	0.074 U	0.20	0.074	ug/l	
99-99-0	p-Nitrotoluene	0.074 U	0.20	0.074	ug/l	
479-45-8	Tetryl	0.074 U	0.20	0.074	ug/l	
99-35-4	1,3,5-Trinitrobenzene	0.094 U	0.20	0.094	ug/l	
118-96-7	2,4,6-Trinitrotoluene	0.079 U	0.20	0.079	ug/l	

CAS No.	Surrogate Recoveries	Run# 1	Run# 2	Limits
610-39-9	3,4-Dinitrotoluene	97%		70-136%

(a) Sample extracted beyond hold time. Analysis performed at Accutest Laboratories, Orlando, FL.

U = Not detected MDL - Method Detection Limit
RL = Reporting Limit
E = Indicates value exceeds calibration range
J = Indicates an estimated value
B = Indicates analyte found in associated method blank
N = Indicates presumptive evidence of a compound

Accutest LabLink@31213 11:02 08-May-2008

Report of Analysis

Client Sample ID:	17WW12-FEB2007		
Lab Sample ID:	T16432-3	**Date Sampled:**	02/21/07
Matrix:	AQ - Ground Water	**Date Received:**	02/23/07
		Percent Solids:	n/a
Project:	Longhorn Army Ammunition Plant		

General Chemistry

Analyte	Result	RL	MDL	Units	DF	Analyzed	By	Method
Perchlorate by IC								
Perchlorate [a]	4.0 U	10	4.0	ug/l	1	03/01/07 19:28	AFL	EPA 314
Alkalinity, Total as CaCO3	34.0	5.0	0.30	mg/l	1	03/03/07 08:15	EB	EPA 310.1
Carbon Dioxide	170	5.0		mg/l	1	03/09/07	RM	SM18 4500CO2D
Chloride	305	1.0	0.57	mg/l	1	03/02/07 12:30	EB	EPA 325.3
Nitrogen, Nitrate [b]	< 0.10	0.10	0.0050	mg/l	1	02/26/07 09:23	LN	SM18 4500NO3E/NO2B
Nitrogen, Nitrate + Nitrite	0.20	0.050	0.0050	mg/l	1	02/26/07 09:23	LN	EPA 353.2
Nitrogen, Nitrite	0.20	0.050	0.0030	mg/l	1	02/23/07 11:30	LN	EPA 353.2
Specific Conductivity [a]	1240	0.50	0.50	umhos/cm	1	03/06/07	AFL	EPA 120.1
Sulfate	144	10	2.6	mg/l	1	03/06/07 18:00	EB	EPA 375.3
Sulfide	U	0.20		mg/l	1	02/24/07 10:00	LN	EPA 376.1
Total Organic Carbon	4.0	1.0	0.092	mg/l	1	02/27/07 09:10	LN	EPA 415.1/9060
pH	5.6			su	1	02/27/07 10:30	EB	EPA 150.1/9040

(a) Analysis performed at Accutest Laboratories, Orlando, FL.
(b) Calculated as: (Nitrogen, Nitrate + Nitrite) - (Nitrogen, Nitrite)

RL = Reporting Limit
MDL = Method Detection Limit

U = Indicates a result < MDL
B = Indicates a result > = MDL but < RL

Accutest LabLink@31213 11:02 08-May-2008

Report of Analysis

Client Sample ID:	LHSM07-FEB2007		
Lab Sample ID:	T16432-4	**Date Sampled:**	02/21/07
Matrix:	AQ - Ground Water	**Date Received:**	02/23/07
Method:	SW846 8260B	**Percent Solids:**	n/a
Project:	Longhorn Army Ammunition Plant		

	File ID	DF	Analyzed	By	Prep Date	Prep Batch	Analytical Batch
Run #1	Y0010454.D	1	02/28/07	JH	n/a	n/a	VY1140
Run #2	F0079010.D	10	03/01/07	LJ	n/a	n/a	VF2306

	Purge Volume
Run #1	5.0 ml
Run #2	5.0 ml

VOA TCL List

CAS No.	Compound	Result	RL	MDL	Units	Q
67-64-1	Acetone	2.8 U	50	2.8	ug/l	
71-43-2	Benzene	0.23 U	2.0	0.23	ug/l	
75-27-4	Bromodichloromethane	0.33 U	2.0	0.33	ug/l	
75-25-2	Bromoform	0.65 U	2.0	0.65	ug/l	
108-90-7	Chlorobenzene	0.54 U	2.0	0.54	ug/l	
75-00-3	Chloroethane	0.46 U	2.0	0.46	ug/l	
67-66-3	Chloroform	0.66 U	2.0	0.66	ug/l	
75-15-0	Carbon disulfide	0.62 U	2.0	0.62	ug/l	
56-23-5	Carbon tetrachloride	0.52 U	2.0	0.52	ug/l	
75-34-3	1,1-Dichloroethane	40.9	2.0	0.52	ug/l	
75-35-4	1,1-Dichloroethylene	394 [a]	20	6.8	ug/l	
107-06-2	1,2-Dichloroethane	0.53 U	2.0	0.53	ug/l	
78-87-5	1,2-Dichloropropane	0.59 U	2.0	0.59	ug/l	
124-48-1	Dibromochloromethane	0.68 U	2.0	0.68	ug/l	
156-59-2	cis-1,2-Dichloroethylene	3.6	2.0	0.83	ug/l	
10061-01-5	cis-1,3-Dichloropropene	0.59 U	2.0	0.59	ug/l	
156-60-5	trans-1,2-Dichloroethylene	0.75 U	2.0	0.75	ug/l	
10061-02-6	trans-1,3-Dichloropropene	0.61 U	2.0	0.61	ug/l	
100-41-4	Ethylbenzene	0.48 U	2.0	0.48	ug/l	
591-78-6	2-Hexanone	1.9 U	10	1.9	ug/l	
108-10-1	4-Methyl-2-pentanone	7.3 U	10	7.3	ug/l	
74-83-9	Methyl bromide	0.47 U	2.0	0.47	ug/l	
74-87-3	Methyl chloride	0.60 U	2.0	0.60	ug/l	
75-09-2	Methylene chloride	0.67 U	5.0	0.67	ug/l	
78-93-3	Methyl ethyl ketone	3.0 U	10	3.0	ug/l	
100-42-5	Styrene	0.50 U	2.0	0.50	ug/l	
71-55-6	1,1,1-Trichloroethane	0.37 U	2.0	0.37	ug/l	
79-34-5	1,1,2,2-Tetrachloroethane	0.46 U	2.0	0.46	ug/l	
79-00-5	1,1,2-Trichloroethane	1.1	2.0	0.66	ug/l	J
127-18-4	Tetrachloroethylene	0.74 U	2.0	0.74	ug/l	
108-88-3	Toluene	0.54 U	2.0	0.54	ug/l	
79-01-6	Trichloroethylene	15.8	2.0	0.63	ug/l	

U = Not detected MDL - Method Detection Limit
RL = Reporting Limit
E = Indicates value exceeds calibration range
J = Indicates an estimated value
B = Indicates analyte found in associated method blank
N = Indicates presumptive evidence of a compound

Report of Analysis

Client Sample ID:	LHSM07-FEB2007		
Lab Sample ID:	T16432-4	**Date Sampled:**	02/21/07
Matrix:	AQ - Ground Water	**Date Received:**	02/23/07
Method:	SW846 8260B	**Percent Solids:**	n/a
Project:	Longhorn Army Ammunition Plant		

VOA TCL List

CAS No.	Compound	Result	RL	MDL	Units	Q
75-01-4	Vinyl chloride	3.0	2.0	0.32	ug/l	
1330-20-7	Xylene (total)	1.1 U	6.0	1.1	ug/l	

CAS No.	Surrogate Recoveries	Run# 1	Run# 2	Limits
1868-53-7	Dibromofluoromethane	127%	102%	73-139%
17060-07-0	1,2-Dichloroethane-D4	117%	96%	66-139%
2037-26-5	Toluene-D8	128%	106%	77-148%
460-00-4	4-Bromofluorobenzene	150%	125%	84-150%

(a) Result is from Run# 2

U = Not detected MDL - Method Detection Limit
RL = Reporting Limit
E = Indicates value exceeds calibration range
J = Indicates an estimated value
B = Indicates analyte found in associated method blank
N = Indicates presumptive evidence of a compound

Accutest LabLink@31213 11:02 08-May-2008

Report of Analysis

Client Sample ID:	LHSM07-FEB2007		
Lab Sample ID:	T16432-4	**Date Sampled:**	02/21/07
Matrix:	AQ - Ground Water	**Date Received:**	02/23/07
Method:	RSKSOP-147/175	**Percent Solids:**	n/a
Project:	Longhorn Army Ammunition Plant		

	File ID	DF	Analyzed	By	Prep Date	Prep Batch	Analytical Batch
Run #1 [a]	XY025315.D	1	03/07/07	AFL	n/a	n/a	F:GXY995
Run #2							

CAS No.	Compound	Result	RL	MDL	Units	Q
74-82-8	Methane	2.88	0.50	0.30	ug/l	
74-84-0	Ethane	0.60 U	1.0	0.60	ug/l	
74-85-1	Ethene	0.80 U	1.0	0.80	ug/l	

(a) Analysis performed at Accutest Laboratories, Orlando, FL.

U = Not detected MDL - Method Detection Limit
RL = Reporting Limit
E = Indicates value exceeds calibration range
J = Indicates an estimated value
B = Indicates analyte found in associated method blank
N = Indicates presumptive evidence of a compound

Accutest LabLink@31213 11:02 08-May-2008

Report of Analysis

Client Sample ID:	LHSM07-FEB2007		
Lab Sample ID:	T16432-4	**Date Sampled:**	02/21/07
Matrix:	AQ - Ground Water	**Date Received:**	02/23/07
		Percent Solids:	n/a
Project:	Longhorn Army Ammunition Plant		

General Chemistry

Analyte	Result	RL	MDL	Units	DF	Analyzed	By	Method
Perchlorate by IC								
Perchlorate [a]	4.0 U	10	4.0	ug/l	1	03/01/07 20:11	AFL	EPA 314
Alkalinity, Total as CaCO3	619	5.0	0.30	mg/l	1	03/03/07 08:15	EB	EPA 310.1
Carbon Dioxide	620	5.0		mg/l	1	03/09/07	RM	SM18 4500CO2D
Chloride	2750	1.0	0.57	mg/l	1	03/02/07 12:30	EB	EPA 325.3
Nitrogen, Nitrate [b]	< 0.10	0.10	0.0050	mg/l	1	02/26/07 09:23	LN	SM18 4500NO3E/NO2B
Nitrogen, Nitrate + Nitrite	0.0050 U	0.050	0.0050	mg/l	1	02/26/07 09:23	LN	EPA 353.2
Nitrogen, Nitrite	0.0030 U	0.050	0.0030	mg/l	1	02/23/07 11:30	LN	EPA 353.2
Specific Conductivity [a]	10600	0.50	0.50	umhos/cm	1	03/06/07	AFL	EPA 120.1
Sulfate	2070	200	2.6	mg/l	20	03/06/07 18:00	EB	EPA 375.3
Sulfide	U	0.20		mg/l	1	02/24/07 10:00	LN	EPA 376.1
Total Organic Carbon	6.0	1.0	0.092	mg/l	1	02/27/07 09:10	LN	EPA 415.1/9060
pH	6.3			su	1	02/27/07 10:30	EB	EPA 150.1/9040

(a) Analysis performed at Accutest Laboratories, Orlando, FL.
(b) Calculated as: (Nitrogen, Nitrate + Nitrite) - (Nitrogen, Nitrite)

RL = Reporting Limit
MDL = Method Detection Limit

U = Indicates a result < MDL
B = Indicates a result > = MDL but < RL

Accutest LabLink@31213 11:02 08-May-2008

Report of Analysis

Client Sample ID:	47WW09-FEB2007		
Lab Sample ID:	T16432-5	**Date Sampled:**	02/21/07
Matrix:	AQ - Ground Water	**Date Received:**	02/23/07
Method:	SW846 8260B	**Percent Solids:**	n/a
Project:	Longhorn Army Ammunition Plant		

	File ID	DF	Analyzed	By	Prep Date	Prep Batch	Analytical Batch
Run #1	Y0010455.D	1	02/28/07	JH	n/a	n/a	VY1140
Run #2	F0079011.D	100	03/01/07	LJ	n/a	n/a	VF2306

	Purge Volume
Run #1	5.0 ml
Run #2	5.0 ml

VOA TCL List

CAS No.	Compound	Result	RL	MDL	Units	Q
67-64-1	Acetone	2.8 U	50	2.8	ug/l	
71-43-2	Benzene	0.23 U	2.0	0.23	ug/l	
75-27-4	Bromodichloromethane	0.33 U	2.0	0.33	ug/l	
75-25-2	Bromoform	0.65 U	2.0	0.65	ug/l	
108-90-7	Chlorobenzene	0.54 U	2.0	0.54	ug/l	
75-00-3	Chloroethane	0.46 U	2.0	0.46	ug/l	
67-66-3	Chloroform	0.66 U	2.0	0.66	ug/l	
75-15-0	Carbon disulfide	0.62 U	2.0	0.62	ug/l	
56-23-5	Carbon tetrachloride	0.52 U	2.0	0.52	ug/l	
75-34-3	1,1-Dichloroethane	0.52 U	2.0	0.52	ug/l	
75-35-4	1,1-Dichloroethylene	4.6	2.0	0.68	ug/l	
107-06-2	1,2-Dichloroethane	0.53 U	2.0	0.53	ug/l	
78-87-5	1,2-Dichloropropane	0.59 U	2.0	0.59	ug/l	
124-48-1	Dibromochloromethane	0.68 U	2.0	0.68	ug/l	
156-59-2	cis-1,2-Dichloroethylene	144	2.0	0.83	ug/l	
10061-01-5	cis-1,3-Dichloropropene	0.59 U	2.0	0.59	ug/l	
156-60-5	trans-1,2-Dichloroethylene	0.75 U	2.0	0.75	ug/l	
10061-02-6	trans-1,3-Dichloropropene	0.61 U	2.0	0.61	ug/l	
100-41-4	Ethylbenzene	0.48 U	2.0	0.48	ug/l	
591-78-6	2-Hexanone	1.9 U	10	1.9	ug/l	
108-10-1	4-Methyl-2-pentanone	7.3 U	10	7.3	ug/l	
74-83-9	Methyl bromide	0.47 U	2.0	0.47	ug/l	
74-87-3	Methyl chloride	0.60 U	2.0	0.60	ug/l	
75-09-2	Methylene chloride	0.67 U	5.0	0.67	ug/l	
78-93-3	Methyl ethyl ketone	3.0 U	10	3.0	ug/l	
100-42-5	Styrene	0.50 U	2.0	0.50	ug/l	
71-55-6	1,1,1-Trichloroethane	0.37 U	2.0	0.37	ug/l	
79-34-5	1,1,2,2-Tetrachloroethane	0.46 U	2.0	0.46	ug/l	
79-00-5	1,1,2-Trichloroethane	0.66 U	2.0	0.66	ug/l	
127-18-4	Tetrachloroethylene	12.2	2.0	0.74	ug/l	
108-88-3	Toluene	0.54 U	2.0	0.54	ug/l	
79-01-6	Trichloroethylene	2230 [a]	200	63	ug/l	

U = Not detected MDL - Method Detection Limit
RL = Reporting Limit
E = Indicates value exceeds calibration range
J = Indicates an estimated value
B = Indicates analyte found in associated method blank
N = Indicates presumptive evidence of a compound

Report of Analysis

Client Sample ID:	47WW09-FEB2007		
Lab Sample ID:	T16432-5	**Date Sampled:**	02/21/07
Matrix:	AQ - Ground Water	**Date Received:**	02/23/07
Method:	SW846 8260B	**Percent Solids:**	n/a
Project:	Longhorn Army Ammunition Plant		

VOA TCL List

CAS No.	Compound	Result	RL	MDL	Units	Q
75-01-4	Vinyl chloride	0.32 U	2.0	0.32	ug/l	
1330-20-7	Xylene (total)	1.1 U	6.0	1.1	ug/l	

CAS No.	Surrogate Recoveries	Run# 1	Run# 2	Limits
1868-53-7	Dibromofluoromethane	125%	104%	73-139%
17060-07-0	1,2-Dichloroethane-D4	122%	98%	66-139%
2037-26-5	Toluene-D8	129%	106%	77-148%
460-00-4	4-Bromofluorobenzene	146%	123%	84-150%

(a) Result is from Run# 2

U = Not detected MDL - Method Detection Limit
RL = Reporting Limit
E = Indicates value exceeds calibration range
J = Indicates an estimated value
B = Indicates analyte found in associated method blank
N = Indicates presumptive evidence of a compound

Accutest LabLink@31213 11:02 08-May-2008

Report of Analysis

Client Sample ID:	47WW09-FEB2007		
Lab Sample ID:	T16432-5	**Date Sampled:**	02/21/07
Matrix:	AQ - Ground Water	**Date Received:**	02/23/07
Method:	RSKSOP-147/175	**Percent Solids:**	n/a
Project:	Longhorn Army Ammunition Plant		

	File ID	DF	Analyzed	By	Prep Date	Prep Batch	Analytical Batch
Run #1 [a]	XY025316.D	1	03/07/07	AFL	n/a	n/a	F:GXY995
Run #2							

CAS No.	Compound	Result	RL	MDL	Units	Q
74-82-8	Methane	0.30 U	0.50	0.30	ug/l	
74-84-0	Ethane	0.60 U	1.0	0.60	ug/l	
74-85-1	Ethene	0.80 U	1.0	0.80	ug/l	

(a) Analysis performed at Accutest Laboratories, Orlando, FL.

U = Not detected MDL - Method Detection Limit
RL = Reporting Limit
E = Indicates value exceeds calibration range
J = Indicates an estimated value
B = Indicates analyte found in associated method blank
N = Indicates presumptive evidence of a compound

Accutest LabLink@31213 11:02 08-May-2008

Report of Analysis

Client Sample ID:	47WW09-FEB2007		
Lab Sample ID:	T16432-5	**Date Sampled:**	02/21/07
Matrix:	AQ - Ground Water	**Date Received:**	02/23/07
		Percent Solids:	n/a
Project:	Longhorn Army Ammunition Plant		

General Chemistry

Analyte	Result	RL	MDL	Units	DF	Analyzed	By	Method
Perchlorate by IC								
Perchlorate [a]	4.0 U	10	4.0	ug/l	1	03/01/07 20:26	AFL	EPA 314
Alkalinity, Total as CaCO3	459	5.0	0.30	mg/l	1	03/03/07 08:15	EB	EPA 310.1
Carbon Dioxide	73.0	5.0		mg/l	1	03/09/07	RM	SM18 4500CO2D
Chloride	585	1.0	0.57	mg/l	1	03/02/07 12:30	EB	EPA 325.3
Nitrogen, Nitrate [b]	< 0.10	0.10	0.0050	mg/l	1	02/26/07 09:23	LN	SM18 4500NO3E/NO2B
Nitrogen, Nitrate + Nitrite	0.0050 U	0.050	0.0050	mg/l	1	02/26/07 09:23	LN	EPA 353.2
Nitrogen, Nitrite	0.0030 U	0.050	0.0030	mg/l	1	02/23/07 11:30	LN	EPA 353.2
Specific Conductivity [a]	3750	0.50	0.50	umhos/cm	1	03/06/07	AFL	EPA 120.1
Sulfate	946	100	2.6	mg/l	10	03/06/07 18:00	EB	EPA 375.3
Sulfide	U	0.20		mg/l	1	02/24/07 10:00	LN	EPA 376.1
Total Organic Carbon	6.0	1.0	0.092	mg/l	1	02/27/07 09:10	LN	EPA 415.1/9060
pH	7.1			su	1	02/27/07 10:30	EB	EPA 150.1/9040

(a) Analysis performed at Accutest Laboratories, Orlando, FL.
(b) Calculated as: (Nitrogen, Nitrate + Nitrite) - (Nitrogen, Nitrite)

RL = Reporting Limit
MDL = Method Detection Limit

U = Indicates a result < MDL
B = Indicates a result > = MDL but < RL

Report of Analysis

Client Sample ID:	29WW36-FEB2007		
Lab Sample ID:	T16432-6	**Date Sampled:**	02/21/07
Matrix:	AQ - Ground Water	**Date Received:**	02/23/07
Method:	SW846 8260B	**Percent Solids:**	n/a
Project:	Longhorn Army Ammunition Plant		

	File ID	DF	Analyzed	By	Prep Date	Prep Batch	Analytical Batch
Run #1	F0079005.D	1	03/01/07	LJ	n/a	n/a	VF2306
Run #2							

	Purge Volume
Run #1	5.0 ml
Run #2	

VOA TCL List

CAS No.	Compound	Result	RL	MDL	Units	Q
67-64-1	Acetone	2.8 U	50	2.8	ug/l	
71-43-2	Benzene	0.23 U	2.0	0.23	ug/l	
75-27-4	Bromodichloromethane	0.33 U	2.0	0.33	ug/l	
75-25-2	Bromoform	0.65 U	2.0	0.65	ug/l	
108-90-7	Chlorobenzene	0.54 U	2.0	0.54	ug/l	
75-00-3	Chloroethane	0.46 U	2.0	0.46	ug/l	
67-66-3	Chloroform	0.66 U	2.0	0.66	ug/l	
75-15-0	Carbon disulfide	0.62 U	2.0	0.62	ug/l	
56-23-5	Carbon tetrachloride	0.52 U	2.0	0.52	ug/l	
75-34-3	1,1-Dichloroethane	0.52 U	2.0	0.52	ug/l	
75-35-4	1,1-Dichloroethylene	0.68 U	2.0	0.68	ug/l	
107-06-2	1,2-Dichloroethane	0.53 U	2.0	0.53	ug/l	
78-87-5	1,2-Dichloropropane	0.59 U	2.0	0.59	ug/l	
124-48-1	Dibromochloromethane	0.68 U	2.0	0.68	ug/l	
156-59-2	cis-1,2-Dichloroethylene	0.83 U	2.0	0.83	ug/l	
10061-01-5	cis-1,3-Dichloropropene	0.59 U	2.0	0.59	ug/l	
156-60-5	trans-1,2-Dichloroethylene	0.75 U	2.0	0.75	ug/l	
10061-02-6	trans-1,3-Dichloropropene	0.61 U	2.0	0.61	ug/l	
100-41-4	Ethylbenzene	0.48 U	2.0	0.48	ug/l	
591-78-6	2-Hexanone	1.9 U	10	1.9	ug/l	
108-10-1	4-Methyl-2-pentanone	7.3 U	10	7.3	ug/l	
74-83-9	Methyl bromide	0.47 U	2.0	0.47	ug/l	
74-87-3	Methyl chloride	0.60 U	2.0	0.60	ug/l	
75-09-2	Methylene chloride	0.67 U	5.0	0.67	ug/l	
78-93-3	Methyl ethyl ketone	3.0 U	10	3.0	ug/l	
100-42-5	Styrene	0.50 U	2.0	0.50	ug/l	
71-55-6	1,1,1-Trichloroethane	0.37 U	2.0	0.37	ug/l	
79-34-5	1,1,2,2-Tetrachloroethane	0.46 U	2.0	0.46	ug/l	
79-00-5	1,1,2-Trichloroethane	0.66 U	2.0	0.66	ug/l	
127-18-4	Tetrachloroethylene	0.74 U	2.0	0.74	ug/l	
108-88-3	Toluene	0.54 U	2.0	0.54	ug/l	
79-01-6	Trichloroethylene	0.63 U	2.0	0.63	ug/l	

U = Not detected MDL - Method Detection Limit
RL = Reporting Limit
E = Indicates value exceeds calibration range
J = Indicates an estimated value
B = Indicates analyte found in associated method blank
N = Indicates presumptive evidence of a compound

Report of Analysis

Client Sample ID:	29WW36-FEB2007		
Lab Sample ID:	T16432-6	**Date Sampled:**	02/21/07
Matrix:	AQ - Ground Water	**Date Received:**	02/23/07
Method:	SW846 8260B	**Percent Solids:**	n/a
Project:	Longhorn Army Ammunition Plant		

VOA TCL List

CAS No.	Compound	Result	RL	MDL	Units	Q
75-01-4	Vinyl chloride	0.32 U	2.0	0.32	ug/l	
1330-20-7	Xylene (total)	1.1 U	6.0	1.1	ug/l	

CAS No.	Surrogate Recoveries	Run# 1	Run# 2	Limits
1868-53-7	Dibromofluoromethane	102%		73-139%
17060-07-0	1,2-Dichloroethane-D4	95%		66-139%
2037-26-5	Toluene-D8	109%		77-148%
460-00-4	4-Bromofluorobenzene	127%		84-150%

U = Not detected MDL - Method Detection Limit
RL = Reporting Limit
E = Indicates value exceeds calibration range
J = Indicates an estimated value
B = Indicates analyte found in associated method blank
N = Indicates presumptive evidence of a compound

Accutest LabLink@31213 11:02 08-May-2008

Report of Analysis

Client Sample ID:	29WW36-FEB2007		
Lab Sample ID:	T16432-6	**Date Sampled:**	02/21/07
Matrix:	AQ - Ground Water	**Date Received:**	02/23/07
Method:	RSKSOP-147/175	**Percent Solids:**	n/a
Project:	Longhorn Army Ammunition Plant		

	File ID	DF	Analyzed	By	Prep Date	Prep Batch	Analytical Batch
Run #1 [a]	XY025318.D	1	03/07/07	AFL	n/a	n/a	F:GXY995
Run #2							

CAS No.	Compound	Result	RL	MDL	Units	Q
74-82-8	Methane	0.94	0.50	0.30	ug/l	
74-84-0	Ethane	0.60 U	1.0	0.60	ug/l	
74-85-1	Ethene	0.80 U	1.0	0.80	ug/l	

(a) Analysis performed at Accutest Laboratories, Orlando, FL.

U = Not detected MDL - Method Detection Limit
RL = Reporting Limit
E = Indicates value exceeds calibration range
J = Indicates an estimated value
B = Indicates analyte found in associated method blank
N = Indicates presumptive evidence of a compound

Accutest LabLink@31213 11:02 08-May-2008

Report of Analysis

Client Sample ID:	29WW36-FEB2007		
Lab Sample ID:	T16432-6	**Date Sampled:**	02/21/07
Matrix:	AQ - Ground Water	**Date Received:**	02/23/07
		Percent Solids:	n/a
Project:	Longhorn Army Ammunition Plant		

General Chemistry

Analyte	Result	RL	MDL	Units	DF	Analyzed	By	Method
Perchlorate by IC								
Perchlorate [a]	4.0 U	10	4.0	ug/l	1	03/01/07 20:40	AFL	EPA 314
Alkalinity, Total as CaCO3	1040	5.0	0.30	mg/l	1	03/03/07 08:15	EB	EPA 310.1
Carbon Dioxide	830	5.0		mg/l	1	03/09/07	RM	SM18 4500CO2D
Chloride	565	1.0	0.57	mg/l	1	03/02/07 12:30	EB	EPA 325.3
Nitrogen, Nitrate [b]	0.30	0.10	0.0050	mg/l	1	02/26/07 09:23	LN	SM18 4500NO3E/NO2B
Nitrogen, Nitrate + Nitrite	0.30	0.050	0.0050	mg/l	1	02/26/07 09:23	LN	EPA 353.2
Nitrogen, Nitrite	0.0030 U	0.050	0.0030	mg/l	1	02/23/07 11:30	LN	EPA 353.2
Specific Conductivity [a]	4150	0.50	0.50	umhos/cm	1	03/06/07	AFL	EPA 120.1
Sulfate	1000	100	2.6	mg/l	10	03/06/07 18:00	EB	EPA 375.3
Sulfide	U	0.20		mg/l	1	02/24/07 10:00	LN	EPA 376.1
Total Organic Carbon	10.0	1.0	0.092	mg/l	1	02/27/07 09:10	LN	EPA 415.1/9060
pH	6.4			su	1	02/27/07 10:30	EB	EPA 150.1/9040

(a) Analysis performed at Accutest Laboratories, Orlando, FL.
(b) Calculated as: (Nitrogen, Nitrate + Nitrite) - (Nitrogen, Nitrite)

RL = Reporting Limit
MDL = Method Detection Limit

U = Indicates a result < MDL
B = Indicates a result > = MDL but < RL

Accutest LabLink@31213 11:02 08-May-2008

Report of Analysis

Client Sample ID:	TRIP BLANK		
Lab Sample ID:	T16432-7	**Date Sampled:**	02/21/07
Matrix:	AQ - Trip Blank Water	**Date Received:**	02/23/07
Method:	SW846 8260B	**Percent Solids:**	n/a
Project:	Longhorn Army Ammunition Plant		

	File ID	DF	Analyzed	By	Prep Date	Prep Batch	Analytical Batch
Run #1	Y0010443.D	1	02/27/07	JH	n/a	n/a	VY1139
Run #2							

	Purge Volume
Run #1	5.0 ml
Run #2	

VOA TCL List

CAS No.	Compound	Result	RL	MDL	Units	Q
67-64-1	Acetone	2.8 U	50	2.8	ug/l	
71-43-2	Benzene	0.23 U	2.0	0.23	ug/l	
75-27-4	Bromodichloromethane	0.33 U	2.0	0.33	ug/l	
75-25-2	Bromoform	0.65 U	2.0	0.65	ug/l	
108-90-7	Chlorobenzene	0.54 U	2.0	0.54	ug/l	
75-00-3	Chloroethane	0.46 U	2.0	0.46	ug/l	
67-66-3	Chloroform	0.66 U	2.0	0.66	ug/l	
75-15-0	Carbon disulfide	0.62 U	2.0	0.62	ug/l	
56-23-5	Carbon tetrachloride	0.52 U	2.0	0.52	ug/l	
75-34-3	1,1-Dichloroethane	0.52 U	2.0	0.52	ug/l	
75-35-4	1,1-Dichloroethylene	0.68 U	2.0	0.68	ug/l	
107-06-2	1,2-Dichloroethane	0.53 U	2.0	0.53	ug/l	
78-87-5	1,2-Dichloropropane	0.59 U	2.0	0.59	ug/l	
124-48-1	Dibromochloromethane	0.68 U	2.0	0.68	ug/l	
156-59-2	cis-1,2-Dichloroethylene	0.83 U	2.0	0.83	ug/l	
10061-01-5	cis-1,3-Dichloropropene	0.59 U	2.0	0.59	ug/l	
156-60-5	trans-1,2-Dichloroethylene	0.75 U	2.0	0.75	ug/l	
10061-02-6	trans-1,3-Dichloropropene	0.61 U	2.0	0.61	ug/l	
100-41-4	Ethylbenzene	0.48 U	2.0	0.48	ug/l	
591-78-6	2-Hexanone	1.9 U	10	1.9	ug/l	
108-10-1	4-Methyl-2-pentanone	7.3 U	10	7.3	ug/l	
74-83-9	Methyl bromide	0.47 U	2.0	0.47	ug/l	
74-87-3	Methyl chloride	0.60 U	2.0	0.60	ug/l	
75-09-2	Methylene chloride	0.67 U	5.0	0.67	ug/l	
78-93-3	Methyl ethyl ketone	3.0 U	10	3.0	ug/l	
100-42-5	Styrene	0.50 U	2.0	0.50	ug/l	
71-55-6	1,1,1-Trichloroethane	0.37 U	2.0	0.37	ug/l	
79-34-5	1,1,2,2-Tetrachloroethane	0.46 U	2.0	0.46	ug/l	
79-00-5	1,1,2-Trichloroethane	0.66 U	2.0	0.66	ug/l	
127-18-4	Tetrachloroethylene	0.74 U	2.0	0.74	ug/l	
108-88-3	Toluene	0.54 U	2.0	0.54	ug/l	
79-01-6	Trichloroethylene	0.63 U	2.0	0.63	ug/l	

U = Not detected MDL - Method Detection Limit
RL = Reporting Limit
E = Indicates value exceeds calibration range
J = Indicates an estimated value
B = Indicates analyte found in associated method blank
N = Indicates presumptive evidence of a compound

Report of Analysis

Client Sample ID:	TRIP BLANK		
Lab Sample ID:	T16432-7	**Date Sampled:**	02/21/07
Matrix:	AQ - Trip Blank Water	**Date Received:**	02/23/07
Method:	SW846 8260B	**Percent Solids:**	n/a
Project:	Longhorn Army Ammunition Plant		

VOA TCL List

CAS No.	Compound	Result	RL	MDL	Units	Q
75-01-4	Vinyl chloride	0.32 U	2.0	0.32	ug/l	
1330-20-7	Xylene (total)	1.1 U	6.0	1.1	ug/l	

CAS No.	Surrogate Recoveries	Run# 1	Run# 2	Limits
1868-53-7	Dibromofluoromethane	117%		73-139%
17060-07-0	1,2-Dichloroethane-D4	114%		66-139%
2037-26-5	Toluene-D8	130%		77-148%
460-00-4	4-Bromofluorobenzene	151% [a]		84-150%

(a) Outside of control limits biased high. There were no target compounds associated with this surrogate.

U = Not detected MDL - Method Detection Limit
RL = Reporting Limit
E = Indicates value exceeds calibration range
J = Indicates an estimated value
B = Indicates analyte found in associated method blank
N = Indicates presumptive evidence of a compound

Misc. Forms

Custody Documents and Other Forms

Includes the following where applicable:

- Chain of Custody
- LRC Form

T16432

00096163

Shaw® Shaw Environmental, Inc.

3010 Briarpark Drive, Suite 4N
Houston, TX 77042 (713) 996-4400

CHAIN-OF-CUSTODY

No. 10497

Laboratory Name: Accutest Address: 10165 HARWIN DR. #150 HOUSTON, TX 77036 Contact: Agnes 713-271-4700

Project Name: Longhorn Army Ammunition Plant Project Location: KARNACK, TX

Project No.: 117591 Project Contact: Kay Everette Project Telephone No.: 713-996-4421

Point of contact: Diane Meyer Telephone No.: 713-996-4408

Project Manager/Supervisor: Praveen Srivastav

Analysis and Method Desired (Indicate separate containers)

Item No.	Sample Number	Date	Time	Comp	Grab	Matrix	Sample Description, Location	Number of Containers	VOC	Anions	Sulfides	Perchlorate	Gases-CO2	Alkalinity	TOC	Remarks
1	LHSMW06-Feb2007	2-21-07	1020		✓	W	Site 35A, GW	3	✓							
2	LHSMW06-Feb2007	2-21-07	1020		✓	W	Site 35A, GW	3					✓			
3	LHSMW06-Feb2007	2-21-07	1020		✓	W	Site 35A, GW	3							✓	
4	LHSMW06-Feb2007	2-21-07	1020		✓	W	Site 35A, GW	1		✓						
5	LHSMW06-Feb2007	2-21-07	1020		✓	W	Site 35A, GW	1			✓					
6	LHSMW06-Feb2007	2-21-07	1020		✓	W	Site 35A, GW	1						✓		
7	LHSMW06-Feb2007	2-21-07	1020		✓	W	Site 35A, GW	1				✓				
8																
9																
10																

Transfers Relinquished By (Signature)	Date/Time	Transfers Accepted By (Signature)	Date/Time	Special Instructions
Sherry McAdoo	2-21-07 1730	Scott Beesinger	2/22/07 07:50	
Scott Beesinger	2/22/07 0830			UPS
				FedEx Airbill No.: 1Z16V7250199281685
		Laboratory A. Rodney	2/23/07 10:00	Sampler's Signature Sherry McAdoo

TAT: ____ Standard ____ Rush Due: ___ Seals Intact? X Y ____ N Received Good Condition X Y ____ N X Cold

White - Lab Copy Canary - Field Copy Pink - File Copy

4.1 4

T16432: Chain of Custody
Page 1 of 7

T16432

00096164

Shaw® Shaw Environmental, Inc.

3010 Briarpark Drive, Suite 4N
Houston, TX 77042 (713) 996-4400

CHAIN-OF-CUSTODY

No. 10942

Laboratory Name: Accutest
Address: 10165 Harwin #150 Houston TX 77036
Contact: Agnes (713)271 4700

Project Name: LHAAP
Project Location: Karnack, TX

Project No.: 117591
Project Contact: K. Everette
Project Telephone No.: (713)996 4421

Point of contact: Diane Meyer
Telephone No.: (713) 996-4408
Project Manager/Supervisor: P. Srivastav

Analysis and Method Desired (Indicate separate containers)

Item No.	Sample Number	Date	Time	Comp	Grab	Matrix	Sample Description, Location	Number of Containers	VOC 8260	Anions 300	Sulfides 376.2	Perchlorates 314	Gases 175	Alkalinity 310.1	TOC 415.1	Explosives 8330	Remarks
2	17WW10-Feb2007	2/21/07	14:58		X		Groundwater	15	3	1	1	1	3	1	3	2	
3	17WW12-Feb2007	2/21/07	11:05		X		Groundwater	15	3	1	1	1	3	1	3	2	
3																	
4																	
5																	
6																	
7																	
8																	
9																	
10																	

Transfers Relinquished By (Signature)	Date/Time	Transfers Accepted By (Signature)	Date/Time
Susan Oller	2/21/07 17:00	Scott Beesinger	2/22/07 07:50
Scott Beesinger	2/22/07 0830		
		Laboratory: A. Rodney	2/23/07 10:00

Special Instructions: Need CO_2 for gases.

UPS
~~FedEx~~ Airbill No.: 1Z66V72501992816 85

Sampler's Signature: Susan Oller

TAT: ____ Standard ____ Rush Due: ____ Seals Intact? X Y ____ N Received Good Condition X Y ____ N ____ Cold

White - Lab Copy Canary - Field Copy Pink - File Copy

4.1

4

T16432: Chain of Custody
Page 2 of 7

T16432

00096165

Shaw® Shaw Environmental, Inc.

3010 Briarpark Drive, Suite 4N
Houston, TX 77042 (713) 996-4400

CHAIN-OF-CUSTODY

No. 10496

Laboratory Name: Accutest Address: 10165 HARWIN DR. # 150 Houston, TX 77036 Contact: Agnes 713-271-4700

Project Name: Longhorn Army Ammunition Plant Project Location: KARNACK, TX

Project No.: 117591 Project Contact: KAY EVERETTE Project Telephone No.: 713-996-4421

Point of contact: Diane Meyer Telephone No.: 713-996-4408 Project Manager/Supervisor: PRAVEEN SRIVASTAV

Item No.	Sample Number	Date	Time	Comp	Grab	Matrix	Sample Description, Location	Number of Containers	VOC	Anions	Sulfides	Perchlorate	Gases, CO2	Alkalinity	TOC	Remarks
4	LHSMW07-Feb2007	2-21 07	1315		✓	W	GW, Site 35A	3	✓							
2	LHSMW07-Feb2007	2-21 07	1315		✓	W	GW, Site 35A	3					✓			
3	LHSMW07-Feb2007	2-21 07	1315		✓	W	GW, Site 35A	3							✓	
4	LHSMW07-Feb2007	2-21 07	1315		✓	W	GW, Site 35A	1		✓						
5	LHSMW07-Feb2007	2-21 07	1315		✓	W	GW, Site 35A	1			✓					
6	LHSMW07-Feb2007	2-21 07	1315		✓	W	GW, Site 35A	1				✓				
7	LHSMW07-Feb2007	2-21 07	1315		✓	W	GW, Site 35A	1						✓		
8																
9																
10																

Transfers Relinquished By (Signature)	Date/Time	Transfers Accepted By (Signature)	Date/Time
Sherry McAdoo	2-21-07 1730	Scott Beesinger	2/22/07 07:50
Scott Beesinger	2/22/07 0830		

Special Instructions: UPS

FedEx Airbill No.: 1Z166V725019928168 5

Laboratory: A. Rodriguez 2/23/07 1000 Sampler's Signature: Sherry McAdoo

TAT: ____ Standard ____ Rush Due: ____ Seals Intact? X Y ____ N Received Good Condition ____ N X Cold

White - Lab Copy Canary - Field Copy Pink - File Copy

4.1 4

T16432: Chain of Custody
Page 3 of 7

T16432

00096166

Shaw® Shaw Environmental, Inc.

3010 Briarpark Drive, Suite 4N
Houston, TX 77042 (713) 996-4400

CHAIN-OF-CUSTODY

No. 10916

Laboratory Name: Accutest Address: 10165 Harwin Dr. #150 Houston, TX 77036 Contact: Agnes: 713-271-4700

Project Name: Longhorn Army Ammunition Plant Project Location: Karnack, TX

Project No.: 117591 Project Contact: Kay Everette Project Telephone No.: 713-996-4421

Point of contact: Diane Meyer Telephone No.: 713-996-4408

Project Manager/Supervisor: Praveen Srivastav

Analysis and Method Desired (Indicate separate containers)

Item No.	Sample Number	Date	Time	Comp	Grab	Matrix	Sample Description, Location	Number of Containers	VOC's 8260	Anions 300	Sulfides 376.2	Perchlorate 314	Gases 175	Alkalinity 310.1	TOC 415.1	VOC's 8260	Remarks
5	47WW09-FEB2007	2/21/07	1422		X	W	47WW09	13	X	X	X	X	X	X	X	X	
2																	
3																	
4																	
5																	
6																	
7																	
8																	
9																	
10																	

Transfers Relinquished By (Signature)	Date/Time	Transfers Accepted By (Signature)	Date/Time	Special Instructions
Scott Beesinger	2/21/07 1800	Scott Beesinger	2/22/07 07:50	UPS
Scott Beesinger	2/22/07 0830			FedEx Airbill No.: 1Z 16V 725 01 9938 116 85
		Laboratory: A. Rodriguez	2/23/07 10:00	Sampler's Signature

TAT: ____ Standard ____ Rush Due: ___ Seals Intact? X Y ____ N Received Good Condition X Y ____ N X Cold

White - Lab Copy Canary - Field Copy Pink - File Copy

4.1 4

T16432: Chain of Custody
Page 4 of 7

T16432

00096167

Shaw® Shaw Environmental, Inc.

3010 Briarpark Drive, Suite 4N
Houston, TX 77042 (713) 996-4400

CHAIN-OF-CUSTODY

No. 10495

Laboratory Name: Accutest | Address: 10165 Harwin Dr. #150 Houston, TX 77036 | Contact: Agnes 713-271-4700

Project Name: Longhorn Army Ammunition Plant | Project Location: Karnack, TX

Project No.: 117591 | Project Contact: Kay Everette | Project Telephone No.: 713-996-4421

Point of contact: Diane Meyer | Telephone No.: 713-996-4408 | Project Manager/Supervisor: Praveen Srivastav

Analysis and Method Desired (Indicate separate containers)

Item No.	Sample Number	Date	Time	Comp	Grab	Matrix	Sample Description, Location	Number of Containers	VOC	Anions	Sulfides	Perchlorate	Gases, CO2	Alkalinity	TOC	Explosives	Remarks
6 1	29WW36-Feb2007	2-21 07	1515		✓	W	Site 29, GW	3	✓								
2	29WW36-Feb2007	2-21 07	1515		✓	W	Site 29, GW	3					✓				
3	29WW36-Feb2007	2-21 07	1515		✓	W	Site 29, GW	3							✓		
4	29WW36-Feb2007	2-21 07	1515		✓	W	Site 29, GW	1		✓							
5	29WW36-Feb2007	2-21 07	1515		✓	W	Site 29, GW	1			✓						
6	29WW36-Feb2007	2-21 07	1515		✓	W	Site 29, GW	1				✓					
7	29WW36-Feb2007	2-21 07	1515		✓	W	Site 29, GW	1						✓			
8	29WW36-Feb2007	2-21 07	1515		✓	W	Site 29, GW	2								✓	
7 9	t.b. -QR-2-23-07																
8 10	⊥																

Transfers Relinquished By (Signature)	Date/Time	Transfers Accepted By (Signature)	Date/Time	Special Instructions
Sherry McAdoo	2-21-07 1735	Scott Beesinger	2/22/07 07:50	
Scott Beesinger	2/22/07 0830			WB
				FedEx Airbill No: 1Z W08 730 0928 1685
		Laboratory: A. Rodny	2/23/07 10:00	Sampler's Signature: Sherry McAdoo

TAT: ____ Standard ____ Rush Due: __ | Seals Intact? ✓ Y ____ N | Received Good Condition X Y ____ N X Cold

White - Lab Copy Canary - Field Copy Pink - File Copy

4.1 4

T16432: Chain of Custody
Page 5 of 7

00096168

ACCUTEST

VARIANCE MEMO
SAMPLE LOG-IN

SAMPLE(S) Various
PROJECT LHAAP
FILED BY AR

DATE 2/23/07
LAB NO. T16432

VARIANCE - Check applicable items(s):

_____ Insufficient sample sent for proper analysis; received approx. _____
_____ Sample bottle received broken and/or cap not intact.
_____ Samples received without paperwork; paperwork received without samples.
_____ Samples received without proper refrigeration, when it has been deemed necessary. Temperature at receipt: _____
_____ Illegible sample number or label missing from bottle.
_____ Numbers on sample not the same as numbers on paper work.
_____ Incomplete instructions received with sample(s) ie.,no request for analysis, no chain of custody, incomplete billing instructions, no due date, etc. Temperature at reciept: _____
_____ Samples received in improper container or lacking proper preservation.
_____ Physical characteristics different than those on sampling sheets; Describe: _____
_____ Rush samples on hold because of incomplete paperwork.
_____ Other (specify) SX#2 - was Rec'd. w/ 14 containers, not 15. SX#6 - was Rec'd. without any containers for Explosives. SX#1 and #3 - Rec'd. samples too close to holding times.

CORRECTIVE ACTION TAKEN

Diane Meyer Person Contacted
_____ Client informed verbally.
_____ Client informed by ~~memo/letter~~ Email
_____ Samples processed as is.
_____ Samples preserved by lab.
_____ Client will resample and resubmit.
_____ By phone.
_____ Samples processed for information only and noted on report.
_____ Samples processed with higher detection limits accepted.
_____ Samples rejected.

Notes: _____

ROUTING

TITLE	DATE	INITIALS	CORRECTED?
Sample Manager:			
Login:			
Project Manager:	2/23/07	AB	
Comments:			

Form: SM006

T16432: Chain of Custody
Page 6 of 7

00096169

ACCUTEST.

SAMPLE RECEIPT LOG

JOB #: T16432 DATE/TIME RECEIVED: 2/23/07 10:00

CLIENT: Shaw Env. INITIALS: AR

Condition/Variance (Circle "Y" for yes and "N" for no or NA. If "N" is circled, see variance for explanation):

1. (Y) N Sample received in undamaged condition.
2. (Y) N Samples received within temp. range.
3. (Y) N Sample received with proper pH.
4. (Y) N Sample received in proper containers.
5. Y (N) Sample volume sufficient for analysis.
6. (Y) N Sample received with chain of custody.
7. (Y) N Chain of Custody matches **sample IDs and analysis** on containers.
8. (Y) N Samples Headspace acceptable
9. (Y) N NA Custody seal received intact and tamper not evident on cooler.
10. Y N (NA) Custody seal received intact and tamper not evident on bottles.

SAMPLE or FIELD ID	BOTTLE #	DATE SAMPLED	MATRIX	VOLUME	LOCATION	PRESERV.	PH
1,4,5,6	1-3	2/21	AQ	40ml.	VREF	1,(2),3,4,5,6	U, <2, >12, NA
	4-6			"	SUB	1,2,3,4,5,6	U, <2, >12, NA
	7-9			"	2J	1,2,3,4,5,6	U, <2, >12, NA
	10-12			P1000	"	(1),2,3,4,5,6	(U), <2, >12, NA
"	13			P500	"	1,2,3,4,(5),6	U, (<2), >12, NA
2,3	1-3			40ml.	VREF	1,2,3,4,5,6	U, <2, >12, NA
3	4-6			"	SUB	1,2,3,4,5,6	U, <2, >12, NA
3	7-9			"	2J	1,2,3,4,5,6	U, <2, >12, NA
3	10-11			P1000	"	(1),2,3,4,5,6	(U), <2, >12, NA
	12			P500	"	1,2,3,4,(5),6	U, (<2), >12, NA
"	13-14			~~SUB~~ A1000	SUB	(1),2,3,4,5,6	(U), <2, >12, NA
3	12			P500	2J	(1),2,3,4,5,6	(U), <2, >12, NA
	13			"	"	1,2,3,4,(5),6	U, (<2), >12, NA
"	14-15	"		A1000	SUB	(1),2,3,4,5,6	(U), <2, >12, NA
(HD) 7,8	1-2	N/A	"	40ml.	VREF	1,2,3,4,5,6	U, <2, >12, NA
	~~QR-2-23-07~~					~~1,2,3~~,4,5,6	U, <2, >12, NA

LOCATION: WI: Walk-In VR: Volatile Refrig. SUB: Subcontract EF: Encore Freezer

PRESERVATIVES: 1: None 2: HCL 3: HNO3 4: H2SO4 5: NAOH 6: Other

pH of waters checked excluding volatiles

pH of soils N/A

Comments:

Delivery method: Courier: UPS

COOLER TEMP: 3.6 COOLER TEMP: 3.0

COOLER TEMP: 4.8 COOLER TEMP:

Form: SM012, Rev.07/28/06, QAO

4.1 4

T16432: Chain of Custody

Page 7 of 7

45 of 143

ACCUTEST. Laboratories

T16432

Appendix A Laboratory Data Package Cover Page

This data package consists of:

- ☐ This signature page, the laboratory review checklist, and the following reportable data:
- ☐ R1 Field chain-of-custody documentation;
- ☐ R2 Sample identification cross-reference;
- ☐ R3 Test reports (analytical data sheets) for each environmental sample that includes:
  - a) Items consistent with NELAC 5.13 or ISO/IEC 17025 Section 5.10
  - b) dilution factors,
  - c) preparation methods,
  - d) cleanup methods, and
  - e) if required for the project, tentatively identified compounds (TICs).
- ☐ R4 Surrogate recovery data including:
  - a) Calculated recovery (%R), and
  - b) The laboratory's surrogate QC limits.
- ☐ R5 Test reports/summary forms for blank samples;
- ☐ R6 Test reports/summary forms for laboratory control samples (LCSs) including:
  - a) LCS spiking amounts,
  - b) Calculated %R for each analyte, and
  - c) The laboratory's LCS QC limits.
- ☐ R7 Test reports for project matrix spike/matrix spike duplicates (MS/MSDs) including:
  - a) Samples associated with the MS/MSD clearly identified,
  - b) MS/MSD spiking amounts,
  - c) Concentration of each MS/MSD analyte measured in the parent and spiked samples,
  - d) Calculated %Rs and relative percent differences (RPDs), and
  - e) The laboratory's MS/MSD QC limits
- ☐ R8 Laboratory analytical duplicate (if applicable) recovery and precision:
  - a) the amount of analyte measured in the duplicate,
  - b) the calculated RPD, and
  - c) the laboratory's QC limits for analytical duplicates.
- ☐ R9 List of method quantitation limits (MQLs) for each analyte for each method and matrix;
- ☐ R10 Other problems or anomalies.
- ☐ The Exception Report for every "No" or "Not Reviewed (NR)" item in laboratory review checklist.

Release Statement: I am responsible for the release of this laboratory data package. This data package has been reviewed by the laboratory and is complete and technically compliant with the requirements of the methods used, except where noted by the laboratory in the attached exception reports. By me signature below, I affirm to the best of my knowledge, all problems/anomalies, observed by the laboratory as having the potential to affect the quality of the data, have been identified by the laboratory in the Laboratory Review Checklist, and no information or data have been knowingly withheld that would affect the quality of the data.

Check, if applicable: [ ] This laboratory is an in-house laboratory controlled by the person responding to rule. The official signing the cover page of the rule-required report (for example, the APAR) in which these data are used is responsible for releasing this data package and is by signature affirming the above release statement is true.

Ron Martino		Lab Director	3/9/2007
Name (Printed)	Signature	Official Title (printed)	Date

1. Items identified by the letter "R" must be included in the laboratory data package submitted in the TRRP-required report(s). Items identified by the letter "S" should be retained and made available upon request for the appropriate retention period.

Appendix A (cont'd): Laboratory Review Checklist: Reportable Data

Laboratory Name: Accutest Laboratories Gulf Coast	LRC Date: 3/9/2007
Project Name: Longhorn Army Ammunition Plant	Laboratory Job Number: T16432
Reviewer Name: Ron Martino	Prep Batch Number(s):

#[1]	A[2]	Description	Yes	No	NA[3]	NR[4]	ER#[5]
		Chain-of-custody (C-O-C)					
R1	OI	Did samples meet the laboratory's standard conditions of sample acceptability upon receipt?	X				
		Were all departures from standard conditions described in an exception report?	X				
R2	OI	**Sample and quality control (QC) identification**					
		Are all field sample ID numbers cross-referenced to the laboratory ID numbers?	X				
		Are all laboratory ID numbers cross-referenced to the corresponding QC data?	X				
R3	OI	**Test reports**					
		Were all samples prepared and analyzed within holding times?		X			2
		Other than those results < MQL, were all other raw values bracketed by calibration standards?	X				
		Were calculations checked by a peer or supervisor?	X				
		Were all analyte identifications checked by a peer or supervisor?	X				
		Were sample quantitation limits reported for all analytes not detected?	X				
		Were all results for soil and sediment samples reported on a dry weight basis?			X		
		Were % moisture (or solids) reported for all soil and sediment samples?			X		
		If required for the project, TICs reported?			X		
R4	O	**Surrogate recovery data**					
		Were surrogates added prior to extraction?	X				
		Were surrogate percent recoveries in all samples within the laboratory QC limits?		X			2
R5	OI	**Test reports/summary forms for blank samples**					
		Were appropriate type(s) of blanks analyzed?	X				
		Were blanks analyzed at the appropriate frequency?	X				
		Were method blanks taken through the entire analytical process, including preparation and, if applicable, cleanup procedures?	X				
		Were blank concentrations < MQL?	X				
R6	OI	**Laboratory control samples (LCS):**					
		Were all COCs included in the LCS?	X				
		Was each LCS taken through the entire analytical procedure, including prep and cleanup steps?	X				
		Were LCSs analyzed at the required frequency?	X				
		Were LCS (and LCSD, if applicable) %Rs within the laboratory QC limits?	X				
		Does the detectability data document the laboratory's capability to detect the COCs at the MDL used to calculate the SQLs?	X				
		Was the LCSD RPD within QC limits?			X		
R7	OI	**Matrix spike (MS) and matrix spike duplicate (MSD) data**					
		Were the project/method specified analytes included in the MS and MSD?	X				
		Were MS/MSD analyzed at the appropriate frequency?	X				
		Were MS (and MSD, if applicable) %Rs within the laboratory QC limits?		X			2
		Were MS/MSD RPDs within laboratory QC limits?	X				
R8	OI	**Analytical duplicate data**					
		Were appropriate analytical duplicates analyzed for each matrix?	X				
		Were analytical duplicates analyzed at the appropriate frequency?	X				
		Were RPDs or relative standard deviations within the laboratory QC limits?	X				
R9	OI	**Method quantitation limits (MQLs):**					
		Are the MQLs for each method analyte included in the laboratory data package?	X				
		Do the MQLs correspond to the concentration of the lowest non-zero calibration standard?	X				
		Are unadjusted MQLs included in the laboratory data package?	X				
R10	OI	**Other problems/anomalies**					
		Are all known problems/anomalies/special conditions noted in this LRC and ER?	X				
		Were all necessary corrective actions performed for the reported data?	X				

2. = organic analyses; I = inorganic analyses (and general chemistry, when applicable);
3. NA = Not applicable;
4. NR = Not reviewed;
5. ER# = Exception Report identification number (an Exception Report should be completed for an item if "NR" or "No" is checked).

Appendix A (cont'd): Laboratory Review Checklist: Reportable Data

Laboratory Name: Accutest Laboratories Gulf Coast	LRC Date: 3/9/2007
Project Name: Longhorn Army Ammunition Plant	Laboratory Job Number: T16432
Reviewer Name: Ron Martino	Prep Batch Number(s):

#[1]	A[2]	Description	Yes	No	NA[3]	NR[4]	ER#[5]
S1	OI	**Initial calibration (ICAL)**					
		Were response factors and/or relative response factors for each analyte within QC limits?	X				
		Were percent RSDs or correlation coefficient criteria met?	X				
		Was the number of standards recommended in the method used for all analytes?	X				
		Were all points generated between the lowest and highest standard used to calculate the curve?	X				
		Are ICAL data available for all instruments used?	X				
		Has the initial calibration curve been verified using an appropriate second source standard?	X				
S2	OI	**Initial and continuing calibration verification (ICCV and CCV) and continuing calibration**					
		Was the CCV analyzed at the method-required frequency?	X				
		Were percent differences for each analyte within the method-required QC limits?	X				
		Was the ICAL curve verified for each analyte?	X				
		Was the absolute value of the analyte concentration in the inorganic CCB < MDL?	X				
S3	O	**Mass spectral tuning:**					
		Was the appropriate compound for the method used for tuning?	X				
		Were ion abundance data within the method-required QC limits?	X				
S4	O	**Internal standards (IS):**					
		Were IS area counts and retention times within the method-required QC limits?	X				
S5	OI	**Raw data (NELAC section 1 appendix A glossary, and section 5.12 or ISO/IEC 17025 section**					
		Were the raw data (for example, chromatograms, spectral data) reviewed by an analyst?	X				
		Were data associated with manual integrations flagged on the raw data?	X				
S6	O	**Dual column confirmation**					
		Did dual column confirmation results meet the method-required QC?	X				
S7	O	**Tentatively identified compounds (TICs):**					
		If TICs were requested, were the mass spectra and TIC data subject to appropriate checks?			X		
S8	I	**Interference Check Sample (ICS) results:**					
		Were percent recoveries within method QC limits?			X		
	I	**Serial dilutions, post digestion spikes, and method of standard additions**					
		Were percent differences, recoveries, and the linearity within the QC limits specified in the method?			X		
S10	OI	**Method detection limit (MDL) studies**					
		Was a MDL study performed for each reported analyte?	X				
		Is the MDL either adjusted or supported by the analysis of DCSs?	X				
S11	OI	**Proficiency test reports:**					
		Was the laboratory's performance acceptable on the applicable proficiency tests or evaluation studies?	X				
S12	OI	**Standards documentation**					
		Are all standards used in the analyses NIST-traceable or obtained from other appropriate sources?	X				
S13	OI	**Compound/analyte identification procedures**					
		Are the procedures for compound/analyte identification documented?	X				
S14	OI	**Demonstration of analyst competency (DOC)**					
		Was DOC conducted consistent with NELAC Chapter 5C or ISO/IEC 4?	X				
		Is documentation of the analyst's competency up-to-date and on file?	X				
S15	OI	**Verification/validation documentation for methods** (NELAC Chap 5 or ISO/IEC 17025 Section 5)					
		Are all the methods used to generate the data documented, verified, and validated, where applicable?	X				
S16	OI	**Laboratory standard operating procedures (SOPs):**					
		Are laboratory SOPs current and on file for each method performed?	X				

1 Items identified by the letter "R" should be included in the laboratory data package submitted to the TCEQ in the TRRP-required report(s). Items identified by the letter "S" should be retained and made available upon request for the appropriate retention period.
2 O = organic analyses; I = inorganic analyses (and general chemistry, when applicable).
3 NA = Not applicable.
4 NR = Not Reviewed.
5 ER# = Exception Report identification number (an Exception Report should be completed for an item if "NR" or "No" is checked).

Appendix A (cont'd): Laboratory Review Checklist: Exception Reports	
Laboratory Name: Accutest Laboratories Gulf Coast	LRC Date: 3/9/2007
Project Name: Longhorn Army Ammunition Plant	Laboratory Job Number: T16432
Reviewer Name: Ron Martino	Prep Batch Number(s):

ER #[1]	DESCRIPTION
1	For reporting purposes, the MQL is defined in the report as the RL. The unadjusted MQL/RL is reported in the method blank. The SQL/MDL is defined in the report as the MDL.
2	All anomalies are discussed in the case narrative.

ER# = Exception Report identification number (an Exception Report should be completed for an item if "NR" or "No" is checked on the LRC)

GC/MS Volatiles

QC Data Summaries

Includes the following where applicable:

- Method Blank Summaries
- Blank Spike Summaries
- Matrix Spike and Duplicate Summaries
- Instrument Performance Checks (BFB)
- Internal Standard Area Summaries
- Surrogate Recovery Summaries
- Initial and Continuing Calibration Summaries

Method Blank Summary

Job Number: T16432
Account: ITTXHO Shaw E & I, Inc.
Project: Longhorn Army Ammunition Plant

Sample	File ID	DF	Analyzed	By	Prep Date	Prep Batch	Analytical Batch
VY1139-MB	Y0010442.D	1	02/27/07	JH	n/a	n/a	VY1139

The QC reported here applies to the following samples: **Method:** SW846 8260B

T16432-1, T16432-7

CAS No.	Compound	Result	RL	MDL	Units	Q
67-64-1	Acetone	ND	50	2.8	ug/l	
71-43-2	Benzene	ND	2.0	0.23	ug/l	
75-27-4	Bromodichloromethane	ND	2.0	0.33	ug/l	
75-25-2	Bromoform	ND	2.0	0.65	ug/l	
108-90-7	Chlorobenzene	ND	2.0	0.54	ug/l	
75-00-3	Chloroethane	ND	2.0	0.46	ug/l	
67-66-3	Chloroform	ND	2.0	0.66	ug/l	
75-15-0	Carbon disulfide	ND	2.0	0.62	ug/l	
56-23-5	Carbon tetrachloride	ND	2.0	0.52	ug/l	
75-34-3	1,1-Dichloroethane	ND	2.0	0.52	ug/l	
75-35-4	1,1-Dichloroethylene	ND	2.0	0.68	ug/l	
107-06-2	1,2-Dichloroethane	ND	2.0	0.53	ug/l	
78-87-5	1,2-Dichloropropane	ND	2.0	0.59	ug/l	
124-48-1	Dibromochloromethane	ND	2.0	0.68	ug/l	
156-59-2	cis-1,2-Dichloroethylene	ND	2.0	0.83	ug/l	
10061-01-5	cis-1,3-Dichloropropene	ND	2.0	0.59	ug/l	
156-60-5	trans-1,2-Dichloroethylene	ND	2.0	0.75	ug/l	
10061-02-6	trans-1,3-Dichloropropene	ND	2.0	0.61	ug/l	
100-41-4	Ethylbenzene	ND	2.0	0.48	ug/l	
591-78-6	2-Hexanone	ND	10	1.9	ug/l	
108-10-1	4-Methyl-2-pentanone	ND	10	7.3	ug/l	
74-83-9	Methyl bromide	ND	2.0	0.47	ug/l	
74-87-3	Methyl chloride	ND	2.0	0.60	ug/l	
75-09-2	Methylene chloride	ND	5.0	0.67	ug/l	
78-93-3	Methyl ethyl ketone	ND	10	3.0	ug/l	
100-42-5	Styrene	ND	2.0	0.50	ug/l	
71-55-6	1,1,1-Trichloroethane	ND	2.0	0.37	ug/l	
79-34-5	1,1,2,2-Tetrachloroethane	ND	2.0	0.46	ug/l	
79-00-5	1,1,2-Trichloroethane	ND	2.0	0.66	ug/l	
127-18-4	Tetrachloroethylene	ND	2.0	0.74	ug/l	
108-88-3	Toluene	ND	2.0	0.54	ug/l	
79-01-6	Trichloroethylene	ND	2.0	0.63	ug/l	
75-01-4	Vinyl chloride	ND	2.0	0.32	ug/l	
1330-20-7	Xylene (total)	ND	6.0	1.1	ug/l	

Method Blank Summary

Job Number: T16432
Account: ITTXHO Shaw E & I, Inc.
Project: Longhorn Army Ammunition Plant

Sample	File ID	DF	Analyzed	By	Prep Date	Prep Batch	Analytical Batch
VY1139-MB	Y0010442.D	1	02/27/07	JH	n/a	n/a	VY1139

The QC reported here applies to the following samples: **Method:** SW846 8260B

T16432-1, T16432-7

CAS No.	Surrogate Recoveries		Limits
1868-53-7	Dibromofluoromethane	118%	73-139%
17060-07-0	1,2-Dichloroethane-D4	119%	66-139%
2037-26-5	Toluene-D8	131%	77-148%
460-00-4	4-Bromofluorobenzene	154%* [a]	84-150%

(a) Outside control limits biased high. There are no target compounds associated with this surrogate.

Method Blank Summary

Job Number: T16432
Account: ITTXHO Shaw E & I, Inc.
Project: Longhorn Army Ammunition Plant

Sample	File ID	DF	Analyzed	By	Prep Date	Prep Batch	Analytical Batch
VY1140-MB	Y0010450.D	1	02/28/07	JH	n/a	n/a	VY1140

The QC reported here applies to the following samples: **Method:** SW846 8260B

T16432-2, T16432-3, T16432-4, T16432-5

CAS No.	Compound	Result	RL	MDL	Units	Q
67-64-1	Acetone	ND	50	2.8	ug/l	
71-43-2	Benzene	ND	2.0	0.23	ug/l	
75-27-4	Bromodichloromethane	ND	2.0	0.33	ug/l	
75-25-2	Bromoform	ND	2.0	0.65	ug/l	
108-90-7	Chlorobenzene	ND	2.0	0.54	ug/l	
75-00-3	Chloroethane	ND	2.0	0.46	ug/l	
67-66-3	Chloroform	ND	2.0	0.66	ug/l	
75-15-0	Carbon disulfide	ND	2.0	0.62	ug/l	
56-23-5	Carbon tetrachloride	ND	2.0	0.52	ug/l	
75-34-3	1,1-Dichloroethane	ND	2.0	0.52	ug/l	
75-35-4	1,1-Dichloroethylene	ND	2.0	0.68	ug/l	
107-06-2	1,2-Dichloroethane	ND	2.0	0.53	ug/l	
78-87-5	1,2-Dichloropropane	ND	2.0	0.59	ug/l	
124-48-1	Dibromochloromethane	ND	2.0	0.68	ug/l	
156-59-2	cis-1,2-Dichloroethylene	ND	2.0	0.83	ug/l	
10061-01-5	cis-1,3-Dichloropropene	ND	2.0	0.59	ug/l	
156-60-5	trans-1,2-Dichloroethylene	ND	2.0	0.75	ug/l	
10061-02-6	trans-1,3-Dichloropropene	ND	2.0	0.61	ug/l	
100-41-4	Ethylbenzene	ND	2.0	0.48	ug/l	
591-78-6	2-Hexanone	ND	10	1.9	ug/l	
108-10-1	4-Methyl-2-pentanone	ND	10	7.3	ug/l	
74-83-9	Methyl bromide	ND	2.0	0.47	ug/l	
74-87-3	Methyl chloride	ND	2.0	0.60	ug/l	
75-09-2	Methylene chloride	ND	5.0	0.67	ug/l	
78-93-3	Methyl ethyl ketone	ND	10	3.0	ug/l	
100-42-5	Styrene	ND	2.0	0.50	ug/l	
71-55-6	1,1,1-Trichloroethane	ND	2.0	0.37	ug/l	
79-34-5	1,1,2,2-Tetrachloroethane	ND	2.0	0.46	ug/l	
79-00-5	1,1,2-Trichloroethane	ND	2.0	0.66	ug/l	
127-18-4	Tetrachloroethylene	ND	2.0	0.74	ug/l	
108-88-3	Toluene	ND	2.0	0.54	ug/l	
79-01-6	Trichloroethylene	ND	2.0	0.63	ug/l	
75-01-4	Vinyl chloride	ND	2.0	0.32	ug/l	
1330-20-7	Xylene (total)	ND	6.0	1.1	ug/l	

Method Blank Summary

Job Number: T16432
Account: ITTXHO Shaw E & I, Inc.
Project: Longhorn Army Ammunition Plant

Sample	File ID	DF	Analyzed	By	Prep Date	Prep Batch	Analytical Batch
VY1140-MB	Y0010450.D	1	02/28/07	JH	n/a	n/a	VY1140

The QC reported here applies to the following samples: **Method:** SW846 8260B

T16432-2, T16432-3, T16432-4, T16432-5

CAS No.	Surrogate Recoveries		Limits
1868-53-7	Dibromofluoromethane	124%	73-139%
17060-07-0	1,2-Dichloroethane-D4	119%	66-139%
2037-26-5	Toluene-D8	130%	77-148%
460-00-4	4-Bromofluorobenzene	150%	84-150%

Method Blank Summary

Job Number: T16432
Account: ITTXHO Shaw E & I, Inc.
Project: Longhorn Army Ammunition Plant

Sample	File ID	DF	Analyzed	By	Prep Date	Prep Batch	Analytical Batch
VF2306-MB	F0078999.D	1	03/01/07	LJ	n/a	n/a	VF2306

The QC reported here applies to the following samples: **Method:** SW846 8260B

T16432-4, T16432-5, T16432-6

CAS No.	Compound	Result	RL	MDL	Units	Q
67-64-1	Acetone	ND	50	2.8	ug/l	
71-43-2	Benzene	ND	2.0	0.23	ug/l	
75-27-4	Bromodichloromethane	ND	2.0	0.33	ug/l	
75-25-2	Bromoform	ND	2.0	0.65	ug/l	
108-90-7	Chlorobenzene	ND	2.0	0.54	ug/l	
75-00-3	Chloroethane	ND	2.0	0.46	ug/l	
67-66-3	Chloroform	ND	2.0	0.66	ug/l	
75-15-0	Carbon disulfide	ND	2.0	0.62	ug/l	
56-23-5	Carbon tetrachloride	ND	2.0	0.52	ug/l	
75-34-3	1,1-Dichloroethane	ND	2.0	0.52	ug/l	
75-35-4	1,1-Dichloroethylene	ND	2.0	0.68	ug/l	
107-06-2	1,2-Dichloroethane	ND	2.0	0.53	ug/l	
78-87-5	1,2-Dichloropropane	ND	2.0	0.59	ug/l	
124-48-1	Dibromochloromethane	ND	2.0	0.68	ug/l	
156-59-2	cis-1,2-Dichloroethylene	ND	2.0	0.83	ug/l	
10061-01-5	cis-1,3-Dichloropropene	ND	2.0	0.59	ug/l	
156-60-5	trans-1,2-Dichloroethylene	ND	2.0	0.75	ug/l	
10061-02-6	trans-1,3-Dichloropropene	ND	2.0	0.61	ug/l	
100-41-4	Ethylbenzene	ND	2.0	0.48	ug/l	
591-78-6	2-Hexanone	ND	10	1.9	ug/l	
108-10-1	4-Methyl-2-pentanone	ND	10	7.3	ug/l	
74-83-9	Methyl bromide	ND	2.0	0.47	ug/l	
74-87-3	Methyl chloride	ND	2.0	0.60	ug/l	
75-09-2	Methylene chloride	ND	5.0	0.67	ug/l	
78-93-3	Methyl ethyl ketone	ND	10	3.0	ug/l	
100-42-5	Styrene	ND	2.0	0.50	ug/l	
71-55-6	1,1,1-Trichloroethane	ND	2.0	0.37	ug/l	
79-34-5	1,1,2,2-Tetrachloroethane	ND	2.0	0.46	ug/l	
79-00-5	1,1,2-Trichloroethane	ND	2.0	0.66	ug/l	
127-18-4	Tetrachloroethylene	ND	2.0	0.74	ug/l	
108-88-3	Toluene	ND	2.0	0.54	ug/l	
79-01-6	Trichloroethylene	ND	2.0	0.63	ug/l	
75-01-4	Vinyl chloride	ND	2.0	0.32	ug/l	
1330-20-7	Xylene (total)	ND	6.0	1.1	ug/l	

Method Blank Summary

Job Number: T16432
Account: ITTXHO Shaw E & I, Inc.
Project: Longhorn Army Ammunition Plant

Sample	File ID	DF	Analyzed	By	Prep Date	Prep Batch	Analytical Batch
VF2306-MB	F0078999.D	1	03/01/07	LJ	n/a	n/a	VF2306

The QC reported here applies to the following samples: **Method:** SW846 8260B

T16432-4, T16432-5, T16432-6

CAS No.	Surrogate Recoveries		Limits
1868-53-7	Dibromofluoromethane	101%	73-139%
17060-07-0	1,2-Dichloroethane-D4	94%	66-139%
2037-26-5	Toluene-D8	110%	77-148%
460-00-4	4-Bromofluorobenzene	119%	84-150%

Blank Spike/Blank Spike Duplicate Summary

Job Number: T16432
Account: ITTXHO Shaw E & I, Inc.
Project: Longhorn Army Ammunition Plant

Sample	File ID	DF	Analyzed	By	Prep Date	Prep Batch	Analytical Batch
VY1139-BS	Y0010439.D	1	02/27/07	JH	n/a	n/a	VY1139
VY1139-BSD	Y0010440.D	1	02/27/07	JH	n/a	n/a	VY1139

The QC reported here applies to the following samples: **Method:** SW846 8260B

T16432-1, T16432-7

CAS No.	Compound	Spike ug/l	BSP ug/l	BSP %	BSD ug/l	BSD %	RPD	Limits Rec/RPD
67-64-1	Acetone	125	121	97	139	111	14	31-158/30
71-43-2	Benzene	25	24.3	97	24.9	100	2	67-118/30
75-27-4	Bromodichloromethane	25	22.4	90	22.3	89	0	66-115/30
75-25-2	Bromoform	25	22.0	88	22.2	89	1	57-119/30
108-90-7	Chlorobenzene	25	22.3	89	23.3	93	4	72-116/30
75-00-3	Chloroethane	25	23.6	94	22.7	91	4	61-135/30
67-66-3	Chloroform	25	25.3	101	24.6	98	3	66-117/30
75-15-0	Carbon disulfide	25	23.7	95	24.3	97	3	39-136/30
56-23-5	Carbon tetrachloride	25	27.6	110	26.9	108	3	67-131/30
75-34-3	1,1-Dichloroethane	25	25.3	101	25.9	104	2	63-125/30
75-35-4	1,1-Dichloroethylene	25	25.8	103	25.8	103	0	52-143/30
107-06-2	1,2-Dichloroethane	25	25.0	100	25.0	100	0	61-120/30
78-87-5	1,2-Dichloropropane	25	23.4	94	23.6	94	1	64-118/30
124-48-1	Dibromochloromethane	25	22.0	88	23.0	92	4	67-117/30
156-59-2	cis-1,2-Dichloroethylene	25	23.0	92	24.0	96	4	65-116/30
10061-01-5	cis-1,3-Dichloropropene	25	24.1	96	24.7	99	2	67-118/30
156-60-5	trans-1,2-Dichloroethylene	25	25.5	102	24.4	98	4	66-128/30
10061-02-6	trans-1,3-Dichloropropene	25	25.0	100	25.0	100	0	73-126/30
100-41-4	Ethylbenzene	25	23.6	94	24.1	96	2	71-119/30
591-78-6	2-Hexanone	125	109	87	126	101	14	45-132/30
108-10-1	4-Methyl-2-pentanone	125	114	91	123	98	8	46-127/30
74-83-9	Methyl bromide	25	21.1	84	20.7	83	2	51-126/30
74-87-3	Methyl chloride	25	23.1	92	23.6	94	2	47-130/30
75-09-2	Methylene chloride	25	22.1	88	22.2	89	0	53-130/30
78-93-3	Methyl ethyl ketone	125	125	100	131	105	5	47-128/30
100-42-5	Styrene	25	19.0	76	19.7	79	4	69-115/30
71-55-6	1,1,1-Trichloroethane	25	25.1	100	26.0	104	4	67-128/30
79-34-5	1,1,2,2-Tetrachloroethane	25	23.1	92	23.5	94	2	57-121/30
79-00-5	1,1,2-Trichloroethane	25	22.9	92	23.7	95	3	62-117/30
127-18-4	Tetrachloroethylene	25	25.2	101	26.4	106	5	72-128/30
108-88-3	Toluene	25	24.5	98	25.4	102	4	70-121/30
79-01-6	Trichloroethylene	25	24.2	97	25.0	100	3	69-120/30
75-01-4	Vinyl chloride	25	24.6	98	25.1	100	2	59-145/30
1330-20-7	Xylene (total)	75	71.5	95	74.3	99	4	72-120/30

Blank Spike/Blank Spike Duplicate Summary

Job Number: T16432
Account: ITTXHO Shaw E & I, Inc.
Project: Longhorn Army Ammunition Plant

Sample	File ID	DF	Analyzed	By	Prep Date	Prep Batch	Analytical Batch
VY1139-BS	Y0010439.D	1	02/27/07	JH	n/a	n/a	VY1139
VY1139-BSD	Y0010440.D	1	02/27/07	JH	n/a	n/a	VY1139

The QC reported here applies to the following samples: **Method:** SW846 8260B

T16432-1, T16432-7

CAS No.	Surrogate Recoveries	BSP	BSD	Limits
1868-53-7	Dibromofluoromethane	121%	120%	73-139%
17060-07-0	1,2-Dichloroethane-D4	117%	120%	66-139%
2037-26-5	Toluene-D8	122%	129%	77-148%
460-00-4	4-Bromofluorobenzene	132%	136%	84-150%

Blank Spike Summary

Job Number: T16432
Account: ITTXHO Shaw E & I, Inc.
Project: Longhorn Army Ammunition Plant

Sample	File ID	DF	Analyzed	By	Prep Date	Prep Batch	Analytical Batch
VY1140-BS	Y0010448.D	1	02/28/07	JH	n/a	n/a	VY1140

The QC reported here applies to the following samples: **Method:** SW846 8260B

T16432-2, T16432-3, T16432-4, T16432-5

CAS No.	Compound	Spike ug/l	BSP ug/l	BSP %	Limits
67-64-1	Acetone	125	136	109	31-158
71-43-2	Benzene	25	24.0	96	67-118
75-27-4	Bromodichloromethane	25	22.7	91	66-115
75-25-2	Bromoform	25	22.1	88	57-119
108-90-7	Chlorobenzene	25	22.8	91	72-116
75-00-3	Chloroethane	25	26.4	106	61-135
67-66-3	Chloroform	25	24.3	97	66-117
75-15-0	Carbon disulfide	25	23.2	93	39-136
56-23-5	Carbon tetrachloride	25	27.4	110	67-131
75-34-3	1,1-Dichloroethane	25	25.0	100	63-125
75-35-4	1,1-Dichloroethylene	25	24.3	97	52-143
107-06-2	1,2-Dichloroethane	25	24.7	99	61-120
78-87-5	1,2-Dichloropropane	25	22.5	90	64-118
124-48-1	Dibromochloromethane	25	22.7	91	67-117
156-59-2	cis-1,2-Dichloroethylene	25	23.4	94	65-116
10061-01-5	cis-1,3-Dichloropropene	25	23.8	95	67-118
156-60-5	trans-1,2-Dichloroethylene	25	23.7	95	66-128
10061-02-6	trans-1,3-Dichloropropene	25	24.7	99	73-126
100-41-4	Ethylbenzene	25	24.0	96	71-119
591-78-6	2-Hexanone	125	115	92	45-132
108-10-1	4-Methyl-2-pentanone	125	113	90	46-127
74-83-9	Methyl bromide	25	25.1	100	51-126
74-87-3	Methyl chloride	25	24.1	96	47-130
75-09-2	Methylene chloride	25	21.0	84	53-130
78-93-3	Methyl ethyl ketone	125	122	98	47-128
100-42-5	Styrene	25	18.7	75	69-115
71-55-6	1,1,1-Trichloroethane	25	26.4	106	67-128
79-34-5	1,1,2,2-Tetrachloroethane	25	23.4	94	57-121
79-00-5	1,1,2-Trichloroethane	25	22.2	89	62-117
127-18-4	Tetrachloroethylene	25	25.5	102	72-128
108-88-3	Toluene	25	23.9	96	70-121
79-01-6	Trichloroethylene	25	24.3	97	69-120
75-01-4	Vinyl chloride	25	24.1	96	59-145
1330-20-7	Xylene (total)	75	71.4	95	72-120

Blank Spike Summary

Job Number: T16432
Account: ITTXHO Shaw E & I, Inc.
Project: Longhorn Army Ammunition Plant

Sample	File ID	DF	Analyzed	By	Prep Date	Prep Batch	Analytical Batch
VY1140-BS	Y0010448.D	1	02/28/07	JH	n/a	n/a	VY1140

The QC reported here applies to the following samples: **Method:** SW846 8260B

T16432-2, T16432-3, T16432-4, T16432-5

CAS No.	Surrogate Recoveries	BSP	Limits
1868-53-7	Dibromofluoromethane	124%	73-139%
17060-07-0	1,2-Dichloroethane-D4	119%	66-139%
2037-26-5	Toluene-D8	128%	77-148%
460-00-4	4-Bromofluorobenzene	130%	84-150%

Blank Spike Summary

Job Number: T16432
Account: ITTXHO Shaw E & I, Inc.
Project: Longhorn Army Ammunition Plant

Sample	File ID	DF	Analyzed	By	Prep Date	Prep Batch	Analytical Batch
VF2306-BS2	F0078998.D	1	03/01/07	LJ	n/a	n/a	VF2306

The QC reported here applies to the following samples: **Method:** SW846 8260B

T16432-4, T16432-5, T16432-6

CAS No.	Compound	Spike ug/l	BSP ug/l	BSP %	Limits

CAS No.	Surrogate Recoveries	BSP	Limits
1868-53-7	Dibromofluoromethane	98%	73-139%
17060-07-0	1,2-Dichloroethane-D4	93%	66-139%
2037-26-5	Toluene-D8	103%	77-148%
460-00-4	4-Bromofluorobenzene	106%	84-150%

Matrix Spike/Matrix Spike Duplicate Summary

Job Number: T16432
Account: ITTXHO Shaw E & I, Inc.
Project: Longhorn Army Ammunition Plant

Sample	File ID	DF	Analyzed	By	Prep Date	Prep Batch	Analytical Batch
T16437-6MS	Y0010469.D	50	02/28/07	JH	n/a	n/a	VY1140
T16437-6MSD	Y0010470.D	50	02/28/07	JH	n/a	n/a	VY1140
T16437-6	Y0010467.D	5	02/28/07	JH	n/a	n/a	VY1140
T16437-6	Y0010468.D	50	02/28/07	JH	n/a	n/a	VY1140

The QC reported here applies to the following samples: **Method:** SW846 8260B

T16432-2, T16432-3, T16432-4, T16432-5

CAS No.	Compound	T16437-6 ug/l	Q	Spike ug/l	MS ug/l	MS %	MSD ug/l	MSD %	RPD	Limits Rec/RPD
67-64-1	Acetone	ND		6250	7100	114	6910	111	3	39-130/26
71-43-2	Benzene	ND		1250	1350	108	1370	110	1	65-122/15
75-27-4	Bromodichloromethane	ND		1250	1210	97	1270	102	5	64-119/22
75-25-2	Bromoform	ND		1250	1100	88	1160	93	5	50-123/28
108-90-7	Chlorobenzene	ND		1250	1090	87	1190	95	9	72-118/20
75-00-3	Chloroethane	ND		1250	1460	117	1280	102	13	60-136/25
67-66-3	Chloroform	ND		1250	1370	110	1420	114	4	65-120/20
75-15-0	Carbon disulfide	ND		1250	1350	108	1370	110	1	37-140/24
56-23-5	Carbon tetrachloride	ND		1250	1480	118	1520	122	3	64-135/23
75-34-3	1,1-Dichloroethane	46.8		1250	1450	112	1510	117	4	65-126/21
75-35-4	1,1-Dichloroethylene	3760 [a]		1250	5190	114	5080	106	2	55-140/25
107-06-2	1,2-Dichloroethane	ND		1250	1370	110	1440	115	5	57-125/25
78-87-5	1,2-Dichloropropane	ND		1250	1250	100	1300	104	4	63-121/22
124-48-1	Dibromochloromethane	ND		1250	1070	86	1160	93	8	60-123/23
156-59-2	cis-1,2-Dichloroethylene	ND		1250	1230	98	1260	101	2	62-120/24
10061-01-5	cis-1,3-Dichloropropene	ND		1250	1090	87	1200	96	10	61-119/23
156-60-5	trans-1,2-Dichloroethylene	ND		1250	1330	106	1370	110	3	64-130/22
10061-02-6	trans-1,3-Dichloropropene	ND		1250	1100	88	1210	97	10	65-129/23
100-41-4	Ethylbenzene	ND		1250	1130	90	1290	103	13	70-123/18
591-78-6	2-Hexanone	ND		6250	5090	81	5330	85	5	41-137/27
108-10-1	4-Methyl-2-pentanone	ND		6250	5280	84	5260	84	0	41-133/22
74-83-9	Methyl bromide	ND		1250	1340	107	1170	94	14	47-129/27
74-87-3	Methyl chloride	ND		1250	1100	88	1200	96	9	45-133/24
75-09-2	Methylene chloride	ND		1250	1250	100	1270	102	2	49-128/21
78-93-3	Methyl ethyl ketone	ND		6250	5420	87	5510	88	2	43-125/29
100-42-5	Styrene	ND		1250	921	74	1040	83	12	65-120/21
71-55-6	1,1,1-Trichloroethane	5.8	J	1250	1400	112	1380	110	1	68-131/21
79-34-5	1,1,2,2-Tetrachloroethane	ND		1250	1100	88	1220	98	10	50-128/22
79-00-5	1,1,2-Trichloroethane	ND		1250	1120	90	1210	97	8	58-120/22
127-18-4	Tetrachloroethylene	ND		1250	1260	101	1320	106	5	69-132/21
108-88-3	Toluene	ND		1250	1200	96	1310	105	9	70-123/18
79-01-6	Trichloroethylene	8.7	J	1250	1230	98	1310	104	6	70-120/19
75-01-4	Vinyl chloride	ND		1250	1220	98	1270	102	4	51-147/24
1330-20-7	Xylene (total)	ND		3750	3530	94	3850	103	9	71-122/16

Matrix Spike/Matrix Spike Duplicate Summary

Job Number: T16432
Account: ITTXHO Shaw E & I, Inc.
Project: Longhorn Army Ammunition Plant

Sample	File ID	DF	Analyzed	By	Prep Date	Prep Batch	Analytical Batch
T16437-6MS	Y0010469.D	50	02/28/07	JH	n/a	n/a	VY1140
T16437-6MSD	Y0010470.D	50	02/28/07	JH	n/a	n/a	VY1140
T16437-6	Y0010467.D	5	02/28/07	JH	n/a	n/a	VY1140
T16437-6	Y0010468.D	50	02/28/07	JH	n/a	n/a	VY1140

The QC reported here applies to the following samples: **Method:** SW846 8260B

T16432-2, T16432-3, T16432-4, T16432-5

CAS No.	Surrogate Recoveries	MS	MSD	T16437-6	T16437-6	Limits
1868-53-7	Dibromofluoromethane	124%	122%	129%	128%	73-139%
17060-07-0	1,2-Dichloroethane-D4	126%	117%	125%	126%	66-139%
2037-26-5	Toluene-D8	120%	119%	129%	128%	77-148%
460-00-4	4-Bromofluorobenzene	123%	129%	142%	155%* [b]	84-150%

(a) Result is from Run #2.
(b) Outside of control limits biased high. There were no target compounds associated with this surrogate

Matrix Spike/Matrix Spike Duplicate Summary

Job Number: T16432
Account: ITTXHO Shaw E & I, Inc.
Project: Longhorn Army Ammunition Plant

Sample	File ID	DF	Analyzed	By	Prep Date	Prep Batch	Analytical Batch
T16411-10MS	F0079015.D	1	03/01/07	LJ	n/a	n/a	VF2306
T16411-10MSD	F0079016.D	1	03/01/07	LJ	n/a	n/a	VF2306
T16411-10	F0079014.D	1	03/01/07	LJ	n/a	n/a	VF2306

The QC reported here applies to the following samples: **Method:** SW846 8260B

T16432-4, T16432-5, T16432-6

CAS No.	Compound	T16411-10 ug/l	Q	Spike ug/l	MS ug/l	MS %	MSD ug/l	MSD %	RPD	Limits Rec/RPD
67-64-1	Acetone	50 U		125	96.7	77	84.7	68	13	39-130/26
71-43-2	Benzene	2.0 U		25	24.3	97	24.5	98	1	65-122/15
75-27-4	Bromodichloromethane	2.0 U		25	22.3	89	22.3	89	0	64-119/22
75-25-2	Bromoform	2.0 U		25	20.9	84	19.9	80	5	50-123/28
108-90-7	Chlorobenzene	2.0 U		25	23.5	94	23.6	94	0	72-118/20
75-00-3	Chloroethane	2.0 U		25	26.6	106	25.2	101	5	60-136/25
67-66-3	Chloroform	2.0 U		25	24.8	99	24.9	100	0	65-120/20
75-15-0	Carbon disulfide	2.0 U		25	22.6	90	22.7	91	0	37-140/24
56-23-5	Carbon tetrachloride	2.0 U		25	27.1	108	27.3	109	1	64-135/23
75-34-3	1,1-Dichloroethane	2.0 U		25	25.5	102	25.1	100	2	65-126/21
75-35-4	1,1-Dichloroethylene	2.0 U		25	25.6	102	24.8	99	3	55-140/25
107-06-2	1,2-Dichloroethane	2.0 U		25	24.2	97	22.4	90	8	57-125/25
78-87-5	1,2-Dichloropropane	2.0 U		25	23.9	96	23.7	95	1	63-121/22
124-48-1	Dibromochloromethane	2.0 U		25	21.6	86	21.0	84	3	60-123/23
156-59-2	cis-1,2-Dichloroethylene	1.5	J	25	23.8	89	24.4	92	2	62-120/24
10061-01-5	cis-1,3-Dichloropropene	2.0 U		25	19.7	79	20.0	80	2	61-119/23
156-60-5	trans-1,2-Dichloroethylene	2.0 U		25	24.2	97	24.2	97	0	64-130/22
10061-02-6	trans-1,3-Dichloropropene	2.0 U		25	19.8	79	19.5	78	2	65-129/23
100-41-4	Ethylbenzene	2.0 U		25	22.8	91	22.9	92	0	70-123/18
591-78-6	2-Hexanone	10 U		125	102	82	97.3	78	5	41-137/27
108-10-1	4-Methyl-2-pentanone	10 U		125	109	87	103	82	6	41-133/22
74-83-9	Methyl bromide	2.0 U		25	23.4	94	21.9	88	7	47-129/27
74-87-3	Methyl chloride	2.0 U		25	25.8	103	23.3	93	10	45-133/24
75-09-2	Methylene chloride	5.0 U		25	22.7	91	22.2	89	2	49-128/21
78-93-3	Methyl ethyl ketone	10 U		125	98.2	79	90.5	72	8	43-125/29
100-42-5	Styrene	2.0 U		25	1.8	7*	2.0	8*	11	65-120/21
71-55-6	1,1,1-Trichloroethane	2.0 U		25	27.0	108	27.0	108	0	68-131/21
79-34-5	1,1,2,2-Tetrachloroethane	2.0 U		25	19.8	79	19.0	76	4	50-128/22
79-00-5	1,1,2-Trichloroethane	2.0 U		25	21.3	85	20.8	83	2	58-120/22
127-18-4	Tetrachloroethylene	2.0 U		25	24.8	99	25.2	101	2	69-132/21
108-88-3	Toluene	2.0 U		25	23.3	93	23.9	96	3	70-123/18
79-01-6	Trichloroethylene	4.8		25	29.4	98	29.6	99	1	70-120/19
75-01-4	Vinyl chloride	2.0 U		25	26.8	107	24.9	100	7	51-147/24
1330-20-7	Xylene (total)	6.0 U		75	69.9	93	69.3	92	1	71-122/16

Matrix Spike/Matrix Spike Duplicate Summary

Job Number: T16432
Account: ITTXHO Shaw E & I, Inc.
Project: Longhorn Army Ammunition Plant

Sample	File ID	DF	Analyzed	By	Prep Date	Prep Batch	Analytical Batch
T16411-10MS	F0079015.D	1	03/01/07	LJ	n/a	n/a	VF2306
T16411-10MSD	F0079016.D	1	03/01/07	LJ	n/a	n/a	VF2306
T16411-10	F0079014.D	1	03/01/07	LJ	n/a	n/a	VF2306

The QC reported here applies to the following samples: **Method:** SW846 8260B

T16432-4, T16432-5, T16432-6

CAS No.	Surrogate Recoveries	MS	MSD	T16411-10	Limits
1868-53-7	Dibromofluoromethane	104%	104%	102%	73-139%
17060-07-0	1,2-Dichloroethane-D4	99%	97%	97%	66-139%
2037-26-5	Toluene-D8	105%	103%	107%	77-148%
460-00-4	4-Bromofluorobenzene	100%	101%	119%	84-150%

Instrument Performance Check (BFB)

Job Number: T16432
Account: ITTXHO Shaw E & I, Inc.
Project: Longhorn Army Ammunition Plant

Sample: VF2276-BFB
Lab File ID: F0078488.D
Instrument ID: GCMSF
Injection Date: 02/12/07
Injection Time: 17:39

m/e	Ion Abundance Criteria	Raw Abundance	% Relative Abundance		Pass/Fail
50	15.0 - 40.0% of mass 95	10313	15.8		Pass
75	30.0 - 60.0% of mass 95	24771	38.0		Pass
95	Base peak, 100% relative abundance	65123	100.0		Pass
96	5.0 - 9.0% of mass 95	4343	6.7		Pass
173	Less than 2.0% of mass 174	344	0.53	(0.67) [a]	Pass
174	50.0 - 100.0% of mass 95	51261	78.7		Pass
175	5.0 - 9.0% of mass 174	3763	5.8	(7.3) [a]	Pass
176	95.0 - 101.0% of mass 174	49896	76.6	(97.3) [a]	Pass
177	5.0 - 9.0% of mass 176	3355	5.2	(6.7) [b]	Pass

(a) Value is % of mass 174
(b) Value is % of mass 176

This check applies to the following Samples, MS, MSD, Blanks, and Standards:

Lab Sample ID	Lab File ID	Date Analyzed	Time Analyzed	Hours Lapsed	Client Sample ID
VF2276-IC2276	F0078490.D	02/12/07	18:42	01:03	Initial cal 200
VF2276-IC2276	F0078491.D	02/12/07	19:14	01:35	Initial cal 400
VF2276-ICC2276	F0078492.D	02/12/07	19:46	02:07	Initial cal 1000
VF2276-IC2276	F0078493.D	02/12/07	20:18	02:39	Initial cal 2000
VF2276-IC2276	F0078494.D	02/12/07	20:49	03:10	Initial cal 4000
VF2276-IC2276	F0078495.D	02/12/07	21:21	03:42	Initial cal 10000

Instrument Performance Check (BFB)

Job Number: T16432
Account: ITTXHO Shaw E & I, Inc.
Project: Longhorn Army Ammunition Plant

Sample: VF2305-BFB
Lab File ID: F0078963.D
Instrument ID: GCMSF
Injection Date: 02/28/07
Injection Time: 14:36

m/e	Ion Abundance Criteria	Raw Abundance	% Relative Abundance		Pass/Fail
50	15.0 - 40.0% of mass 95	7281	16.0		Pass
75	30.0 - 60.0% of mass 95	18364	40.3		Pass
95	Base peak, 100% relative abundance	45541	100.0		Pass
96	5.0 - 9.0% of mass 95	2793	6.1		Pass
173	Less than 2.0% of mass 174	107	0.23	(0.27) [a]	Pass
174	50.0 - 100.0% of mass 95	39123	85.9		Pass
175	5.0 - 9.0% of mass 174	3023	6.6	(7.7) [a]	Pass
176	95.0 - 101.0% of mass 174	37355	82.0	(95.5) [a]	Pass
177	5.0 - 9.0% of mass 176	2802	6.2	(7.5) [b]	Pass

(a) Value is % of mass 174
(b) Value is % of mass 176

This check applies to the following Samples, MS, MSD, Blanks, and Standards:

Lab Sample ID	Lab File ID	Date Analyzed	Time Analyzed	Hours Lapsed	Client Sample ID
VF2305-IC2305	F0078964.D	02/28/07	15:10	00:34	Initial cal 2
VF2305-IC2305	F0078965.D	02/28/07	15:41	01:05	Initial cal 5
VF2305-IC2305	F0078966.D	02/28/07	16:12	01:36	Initial cal 20
VF2305-ICC2305	F0078967.D	02/28/07	16:44	02:08	Initial cal 40
VF2305-IC2305	F0078968.D	02/28/07	17:16	02:40	Initial cal 70
VF2305-IC2305	F0078969.D	02/28/07	17:46	03:10	Initial cal 100
VF2305-IC2305	F0078970.D	02/28/07	18:18	03:42	Initial cal 200
VF2305-BS	F0078972.D	02/28/07	19:21	04:45	Blank Spike
VF2305-MB	F0078974.D	02/28/07	20:24	05:48	Method Blank
ZZZZZZ	F0078975.D	02/28/07	20:55	06:19	(unrelated sample)
ZZZZZZ	F0078976.D	02/28/07	21:26	06:50	(unrelated sample)
ZZZZZZ	F0078977.D	02/28/07	21:58	07:22	(unrelated sample)
T16395-2	F0078978.D	02/28/07	22:30	07:54	(used for QC only; not part of job T16432)
T16395-2MS	F0078979.D	02/28/07	23:00	08:24	Matrix Spike
T16395-2MSD	F0078980.D	02/28/07	23:32	08:56	Matrix Spike Duplicate
ZZZZZZ	F0078981.D	03/01/07	00:03	09:27	(unrelated sample)
ZZZZZZ	F0078982.D	03/01/07	00:35	09:59	(unrelated sample)
ZZZZZZ	F0078983.D	03/01/07	01:06	10:30	(unrelated sample)
ZZZZZZ	F0078984.D	03/01/07	01:38	11:02	(unrelated sample)
ZZZZZZ	F0078989.D	03/01/07	04:15	13:39	(unrelated sample)
ZZZZZZ	F0078990.D	03/01/07	04:47	14:11	(unrelated sample)
ZZZZZZ	F0078991.D	03/01/07	05:19	14:43	(unrelated sample)
ZZZZZZ	F0078992.D	03/01/07	05:50	15:14	(unrelated sample)

Instrument Performance Check (BFB)

Job Number: T16432
Account: ITTXHO Shaw E & I, Inc.
Project: Longhorn Army Ammunition Plant

Sample: VF2306-BFB
Lab File ID: F0078994.D
Instrument ID: GCMSF
Injection Date: 03/01/07
Injection Time: 07:50

m/e	Ion Abundance Criteria	Raw Abundance	% Relative Abundance		Pass/Fail
50	15.0 - 40.0% of mass 95	6679	18.1		Pass
75	30.0 - 60.0% of mass 95	15417	41.8		Pass
95	Base peak, 100% relative abundance	36917	100.0		Pass
96	5.0 - 9.0% of mass 95	2620	7.1		Pass
173	Less than 2.0% of mass 174	0	0.0	(0.0) [a]	Pass
174	50.0 - 100.0% of mass 95	32187	87.2		Pass
175	5.0 - 9.0% of mass 174	2345	6.4	(7.3) [a]	Pass
176	95.0 - 101.0% of mass 174	31168	84.4	(96.8) [a]	Pass
177	5.0 - 9.0% of mass 176	2163	5.9	(6.9) [b]	Pass

(a) Value is % of mass 174
(b) Value is % of mass 176

This check applies to the following Samples, MS, MSD, Blanks, and Standards:

Lab Sample ID	Lab File ID	Date Analyzed	Time Analyzed	Hours Lapsed	Client Sample ID
VF2306-CC2305	F0078995.D	03/01/07	08:23	00:33	Continuing cal 20
VF2306-CC2276	F0078996.D	03/01/07	08:55	01:05	Continuing cal 1000
VF2306-BS1	F0078997.D	03/01/07	09:31	01:41	Blank Spike
VF2306-BS2	F0078998.D	03/01/07	10:02	02:12	Blank Spike
VF2306-MB	F0078999.D	03/01/07	10:34	02:44	Method Blank
ZZZZZZ	F0079000.D	03/01/07	11:06	03:16	(unrelated sample)
ZZZZZZ	F0079001.D	03/01/07	11:37	03:47	(unrelated sample)
ZZZZZZ	F0079002.D	03/01/07	12:09	04:19	(unrelated sample)
ZZZZZZ	F0079003.D	03/01/07	12:41	04:51	(unrelated sample)
ZZZZZZ	F0079004.D	03/01/07	13:12	05:22	(unrelated sample)
T16432-6	F0079005.D	03/01/07	13:44	05:54	29WW36-FEB2007
ZZZZZZ	F0079006.D	03/01/07	14:16	06:26	(unrelated sample)
ZZZZZZ	F0079007.D	03/01/07	14:47	06:57	(unrelated sample)
ZZZZZZ	F0079008.D	03/01/07	15:18	07:28	(unrelated sample)
ZZZZZZ	F0079009.D	03/01/07	15:50	08:00	(unrelated sample)
T16432-4	F0079010.D	03/01/07	16:22	08:32	LHSM07-FEB2007
T16432-5	F0079011.D	03/01/07	16:54	09:04	47WW09-FEB2007
ZZZZZZ	F0079012.D	03/01/07	17:26	09:36	(unrelated sample)
ZZZZZZ	F0079013.D	03/01/07	17:57	10:07	(unrelated sample)
T16411-10	F0079014.D	03/01/07	18:28	10:38	(used for QC only; not part of job T16432)
T16411-10MS	F0079015.D	03/01/07	19:01	11:11	Matrix Spike
T16411-10MSD	F0079016.D	03/01/07	19:33	11:43	Matrix Spike Duplicate
ZZZZZZ	F0079020.D	03/01/07	21:39	13:49	(unrelated sample)
ZZZZZZ	F0079021.D	03/01/07	22:12	14:22	(unrelated sample)

Instrument Performance Check (BFB)

Job Number: T16432
Account: ITTXHO Shaw E & I, Inc.
Project: Longhorn Army Ammunition Plant

Sample: VY1139-BFB
Lab File ID: Y0010427.D
Instrument ID: GCMSY
Injection Date: 02/27/07
Injection Time: 12:39

m/e	Ion Abundance Criteria	Raw Abundance	% Relative Abundance		Pass/Fail
50	15.0 - 40.0% of mass 95	18328	22.3		Pass
75	30.0 - 60.0% of mass 95	48184	58.6		Pass
95	Base peak, 100% relative abundance	82280	100.0		Pass
96	5.0 - 9.0% of mass 95	5435	6.6		Pass
173	Less than 2.0% of mass 174	0	0.0	(0.0) [a]	Pass
174	50.0 - 100.0% of mass 95	66136	80.4		Pass
175	5.0 - 9.0% of mass 174	5281	6.4	(8.0) [a]	Pass
176	95.0 - 101.0% of mass 174	63408	77.1	(95.9) [a]	Pass
177	5.0 - 9.0% of mass 176	3916	4.8	(6.2) [b]	Pass

(a) Value is % of mass 174
(b) Value is % of mass 176

This check applies to the following Samples, MS, MSD, Blanks, and Standards:

Lab Sample ID	Lab File ID	Date Analyzed	Time Analyzed	Hours Lapsed	Client Sample ID
VY1139-IC1139	Y0010431.D	02/27/07	14:37	01:58	Initial cal 20
VY1139-ICC1139	Y0010432.D	02/27/07	15:06	02:27	Initial cal 40
VY1139-IC1139	Y0010433.D	02/27/07	15:36	02:57	Initial cal 70
VY1139-IC1139	Y0010434.D	02/27/07	16:05	03:26	Initial cal 100
VY1139-IC1139	Y0010435.D	02/27/07	16:35	03:56	Initial cal 200
VY1139-IC1139	Y0010437.D	02/27/07	17:33	04:54	Initial cal 5
VY1139-IC1139	Y0010438.D	02/27/07	18:03	05:24	Initial cal 2
VY1139-BS	Y0010439.D	02/27/07	18:32	05:53	Blank Spike
VY1139-BSD	Y0010440.D	02/27/07	19:02	06:23	Blank Spike Duplicate
VY1139-MB	Y0010442.D	02/27/07	20:01	07:22	Method Blank
T16432-7	Y0010443.D	02/27/07	20:30	07:51	TRIP BLANK
T16432-1	Y0010444.D	02/27/07	21:00	08:21	LHSMW06-FEB2007

Instrument Performance Check (BFB)

Job Number: T16432
Account: ITTXHO Shaw E & I, Inc.
Project: Longhorn Army Ammunition Plant

Sample: VY1140-BFB
Lab File ID: Y0010446.D
Instrument ID: GCMSY
Injection Date: 02/28/07
Injection Time: 10:30

m/e	Ion Abundance Criteria	Raw Abundance	% Relative Abundance		Pass/Fail
50	15.0 - 40.0% of mass 95	22976	24.0		Pass
75	30.0 - 60.0% of mass 95	54920	57.5		Pass
95	Base peak, 100% relative abundance	95552	100.0		Pass
96	5.0 - 9.0% of mass 95	5753	6.0		Pass
173	Less than 2.0% of mass 174	0	0.0	(0.0) [a]	Pass
174	50.0 - 100.0% of mass 95	67168	70.3		Pass
175	5.0 - 9.0% of mass 174	5842	6.1	(8.7) [a]	Pass
176	95.0 - 101.0% of mass 174	66456	69.5	(98.9) [a]	Pass
177	5.0 - 9.0% of mass 176	5395	5.6	(8.1) [b]	Pass

(a) Value is % of mass 174
(b) Value is % of mass 176

This check applies to the following Samples, MS, MSD, Blanks, and Standards:

Lab Sample ID	Lab File ID	Date Analyzed	Time Analyzed	Hours Lapsed	Client Sample ID
VY1140-CC1139	Y0010447.D	02/28/07	10:57	00:27	Continuing cal 20
VY1140-BS	Y0010448.D	02/28/07	11:25	00:55	Blank Spike
VY1140-MB	Y0010450.D	02/28/07	12:20	01:50	Method Blank
ZZZZZZ	Y0010451.D	02/28/07	12:47	02:17	(unrelated sample)
T16432-2	Y0010452.D	02/28/07	13:15	02:45	17WW10-FEB2007
T16432-3	Y0010453.D	02/28/07	13:42	03:12	17WW12-FEB2007
T16432-4	Y0010454.D	02/28/07	14:09	03:39	LHSM07-FEB2007
T16432-5	Y0010455.D	02/28/07	14:35	04:05	47WW09-FEB2007
ZZZZZZ	Y0010457.D	02/28/07	15:32	05:02	(unrelated sample)
ZZZZZZ	Y0010458.D	02/28/07	16:00	05:30	(unrelated sample)
ZZZZZZ	Y0010459.D	02/28/07	16:27	05:57	(unrelated sample)
ZZZZZZ	Y0010460.D	02/28/07	16:54	06:24	(unrelated sample)
ZZZZZZ	Y0010461.D	02/28/07	17:22	06:52	(unrelated sample)
ZZZZZZ	Y0010462.D	02/28/07	17:49	07:19	(unrelated sample)
ZZZZZZ	Y0010463.D	02/28/07	18:17	07:47	(unrelated sample)
ZZZZZZ	Y0010464.D	02/28/07	18:44	08:14	(unrelated sample)
ZZZZZZ	Y0010465.D	02/28/07	19:12	08:42	(unrelated sample)
ZZZZZZ	Y0010466.D	02/28/07	19:39	09:09	(unrelated sample)
T16437-6	Y0010467.D	02/28/07	20:07	09:37	(used for QC only; not part of job T16432)
T16437-6	Y0010468.D	02/28/07	20:35	10:05	(used for QC only; not part of job T16432)
T16437-6MS	Y0010469.D	02/28/07	21:02	10:32	Matrix Spike
T16437-6MSD	Y0010470.D	02/28/07	21:29	10:59	Matrix Spike Duplicate
VY1140-ECC1139	Y0010472.D	02/28/07	22:24	11:54	Ending cal 20

Volatile Internal Standard Area Summary

Job Number: T16432
Account: ITTXHO Shaw E & I, Inc.
Project: Longhorn Army Ammunition Plant

Check Std: VF2306-CC2305 **Injection Date:** 03/01/07
Lab File ID: F0078995.D **Injection Time:** 08:23
Instrument ID: GCMSF **Method:** SW846 8260B

	IS 1 AREA	RT	IS 2 AREA	RT	IS 3 AREA	RT
Check Std	699201	11.94	525986	16.02	192418	19.30
Upper Limit [a]	1398402	12.44	1051972	16.52	384836	19.80
Lower Limit [b]	349601	11.44	262993	15.52	96209	18.80

Lab Sample ID	IS 1 AREA	RT	IS 2 AREA	RT	IS 3 AREA	RT
VF2306-BS1	777387	11.94	579705	16.01	219016	19.30
VF2306-BS2	816000	11.93	591535	16.01	206818	19.28
VF2306-MB	806821	11.93	553209	16.02	163421	19.28
ZZZZZZ	782363	11.93	537014	16.01	147308	19.28
ZZZZZZ	758389	11.93	519002	16.01	140295	19.27
ZZZZZZ	730503	11.92	505963	16.01	133214	19.28
ZZZZZZ	713902	11.93	493376	16.00	130066	19.28
ZZZZZZ	709648	11.93	489247	16.02	126540	19.28
T16432-6	697001	11.93	477711	16.00	126547	19.28
ZZZZZZ	693179	11.93	488543	16.01	121877	19.29
ZZZZZZ	684656	11.93	471501	16.01	114404	19.28
ZZZZZZ	670434	11.93	467470	16.00	117612	19.28
ZZZZZZ	610736	11.91	425298	16.00	114844	19.26
T16432-4	638047	11.92	449783	15.99	118479	19.26
T16432-5	598577	11.91	425000	16.00	114851	19.27
ZZZZZZ	618266	11.91	428138	16.00	108080	19.26
ZZZZZZ	597863	11.91	425430	15.99	116121	19.25
T16411-10	617663	11.91	436613	15.99	122528	19.25
T16411-10MS	620696	11.90	469833	15.98	178265	19.24
T16411-10MSD	655046	11.90	491723	15.97	183495	19.25
ZZZZZZ	625983	11.89	448435	15.97	117429	19.24
ZZZZZZ	617306	11.89	441010	15.97	117597	19.24

IS 1 = Fluorobenzene
IS 2 = Chlorobenzene-D5
IS 3 = 1,4-Dichlorobenzene-d4

(a) Upper Limit = + 100% of check standard area; Retention time + 0.5 minutes.
(b) Lower Limit = -50% of check standard area; Retention time -0.5 minutes.

Volatile Internal Standard Area Summary

Job Number: T16432
Account: ITTXHO Shaw E & I, Inc.
Project: Longhorn Army Ammunition Plant

Check Std:	VY1139-ICC1139	**Injection Date:**	02/27/07
Lab File ID:	Y0010432.D	**Injection Time:**	15:06
Instrument ID:	GCMSY	**Method:**	SW846 8260B

	IS 1 AREA	RT	IS 2 AREA	RT	IS 3 AREA	RT
Check Std	528585	9.58	416756	12.71	213134	15.11
Upper Limit [a]	1057170	10.08	833512	13.21	426268	15.61
Lower Limit [b]	264293	9.08	208378	12.21	106567	14.61

Lab Sample ID	IS 1 AREA	RT	IS 2 AREA	RT	IS 3 AREA	RT
VY1139-BS	598294	9.58	460129	12.71	231226	15.11
VY1139-BSD	610038	9.58	454509	12.71	235602	15.11
VY1139-MB	535914	9.58	377022	12.71	139892	15.11
T16432-7	529138	9.58	362047	12.71	130297	15.11
T16432-1	516276	9.58	349440	12.71	123643	15.11

IS 1 = Fluorobenzene
IS 2 = Chlorobenzene-D5
IS 3 = 1,4-Dichlorobenzene-d4

(a) Upper Limit = + 100% of check standard area; Retention time + 0.5 minutes.
(b) Lower Limit = -50% of check standard area; Retention time -0.5 minutes.

Volatile Internal Standard Area Summary

Job Number: T16432
Account: ITTXHO Shaw E & I, Inc.
Project: Longhorn Army Ammunition Plant

Check Std: VY1140-CC1139 **Injection Date:** 02/28/07
Lab File ID: Y0010447.D **Injection Time:** 10:57
Instrument ID: GCMSY **Method:** SW846 8260B

	IS 1 AREA	RT	IS 2 AREA	RT	IS 3 AREA	RT
Check Std	514168	9.58	390760	12.71	197760	15.11
Upper Limit [a]	1028336	10.08	781520	13.21	395520	15.61
Lower Limit [b]	257084	9.08	195380	12.21	98880	14.61

Lab Sample ID	IS 1 AREA	RT	IS 2 AREA	RT	IS 3 AREA	RT
VY1140-BS	528114	9.58	398199	12.71	212159	15.11
VY1140-MB	477732	9.58	342871	12.71	132949	15.11
ZZZZZZ	464413	9.58	327103	12.71	124680	15.11
T16432-2	464350	9.58	318565	12.71	120370	15.11
T16432-3	470453	9.58	315840	12.71	112791	15.11
T16432-4	461116	9.58	314727	12.71	113535	15.11
T16432-5	431337	9.59	309610	12.71	127372	15.11
ZZZZZZ	405017	9.58	275190	12.71	102766	15.11
ZZZZZZ	407320	9.58	285074	12.71	101688	15.11
ZZZZZZ	403367	9.58	270362	12.71	98390*	15.11
ZZZZZZ	392945	9.58	270524	12.71	97126*	15.11
ZZZZZZ	408609	9.58	279258	12.71	99061	15.11
ZZZZZZ	402576	9.58	276931	12.71	102897	15.11
ZZZZZZ	405732	9.58	280078	12.71	95538*	15.11
ZZZZZZ	416787	9.58	275004	12.71	99665	15.11
ZZZZZZ	393479	9.58	274001	12.71	99599	15.11
ZZZZZZ	391388	9.58	271169	12.71	102103	15.11
T16437-6	392973	9.58	275722	12.71	106578	15.11
T16437-6	396432	9.58	280504	12.71	96800*	15.11
T16437-6MS	418911	9.58	340300	12.71	177835	15.11
T16437-6MSD	471794	9.58	366048	12.71	183943	15.11
VY1140-ECC1139	442011	9.58	342239	12.71	177981	15.11

IS 1 = Fluorobenzene
IS 2 = Chlorobenzene-D5
IS 3 = 1,4-Dichlorobenzene-d4

(a) Upper Limit = + 100% of check standard area; Retention time + 0.5 minutes.
(b) Lower Limit = -50% of check standard area; Retention time -0.5 minutes.

Volatile Surrogate Recovery Summary

Job Number: T16432
Account: ITTXHO Shaw E & I, Inc.
Project: Longhorn Army Ammunition Plant

Method: SW846 8260B **Matrix:** AQ

Samples and QC shown here apply to the above method

Lab Sample ID	Lab File ID	S1	S2	S3	S4
T16432-1	Y0010444.D	121.0	117.0	133.0	158.0* [a]
T16432-2	Y0010452.D	124.0	122.0	129.0	153.0* [a]
T16432-3	Y0010453.D	121.0	118.0	132.0	154.0* [a]
T16432-4	F0079010.D	102.0	96.0	106.0	125.0
T16432-4	Y0010454.D	127.0	117.0	128.0	150.0
T16432-5	F0079011.D	104.0	98.0	106.0	123.0
T16432-5	Y0010455.D	125.0	122.0	129.0	146.0
T16432-6	F0079005.D	102.0	95.0	109.0	127.0
T16432-7	Y0010443.D	117.0	114.0	130.0	151.0* [a]
T16411-10MS	F0079015.D	104.0	99.0	105.0	100.0
T16411-10MSD	F0079016.D	104.0	97.0	103.0	101.0
T16437-6MS	Y0010469.D	124.0	126.0	120.0	123.0
T16437-6MSD	Y0010470.D	122.0	117.0	119.0	129.0
VF2306-BS2	F0078998.D	98.0	93.0	103.0	106.0
VF2306-MB	F0078999.D	101.0	94.0	110.0	119.0
VY1139-BS	Y0010439.D	121.0	117.0	122.0	132.0
VY1139-BSD	Y0010440.D	120.0	120.0	129.0	136.0
VY1139-MB	Y0010442.D	118.0	119.0	131.0	154.0* [b]
VY1140-BS	Y0010448.D	124.0	119.0	128.0	130.0
VY1140-MB	Y0010450.D	124.0	119.0	130.0	150.0

Surrogate Compounds	Recovery Limits
S1 = Dibromofluoromethane	73-139%
S2 = 1,2-Dichloroethane-D4	66-139%
S3 = Toluene-D8	77-148%
S4 = 4-Bromofluorobenzene	84-150%

(a) Outside of control limits biased high. There were no target compounds associated with this surrogate.
(b) Outside control limits biased high. There are no target compounds associated with this surrogate.

Initial Calibration Summary

Job Number: T16432
Account: ITTXHO Shaw E & I, Inc.
Project: Longhorn Army Ammunition Plant

Sample: VF2276-ICC2276
Lab FileID: F0078492.D

Response Factor Report GC/MS F

Method : C:\HPCHEM\1\METHODS\VF2276GW.M (RTE Integrator)
Title : SW846 8260B and EPA 624
Last Update : Tue Feb 13 07:54:50 2007
Response via : Initial Calibration

Calibration Files
200 =F0078490.D 400 =F0078491.D 1000 =F0078492.D
2000 =F0078493.D 4000 =F0078494.D 9000 =F0078495.D

	Compound	200	400	1000	2000	4000	9000	Avg	%RSD
1) I	Fluorobenzene	----------	ISTD	----------					
2) S	Dibromofluoromethan	0.287	0.281	0.280	0.278	0.270	0.256	0.275	4.06
3) S	1,2-Dichloroethane-	0.212	0.207	0.211	0.211	0.212	0.209	0.210	0.87
4) I	Chlorobenzene-d5	----------	ISTD	----------					
5) S	Toluene-d8	1.047	1.037	1.041	1.022	1.035	1.039	1.037	0.83
6) I	1,4-Dichlorobenzene-d	----------	ISTD	----------					
7) S	4-Bromofluorobenzen	0.808	0.807	0.790	0.802	0.804	0.865	0.813	3.25
8) I	1,4-Dichlorobenzene-d	----------	ISTD	----------					
9) H	TPH-GRO (C6-C10)	1.214	0.770	0.582	0.475	0.429	0.392	0.644 E1	48.27

----- Linear regression ----- Coefficient = 0.9997
Response Ratio = 37.35716 + 3.74928 *A

(#) = Out of Range

VF2276GW.M Tue Feb 13 09:27:02 2007

Initial Calibration Summary

Job Number: T16432
Account: ITTXHO Shaw E & I, Inc.
Project: Longhorn Army Ammunition Plant

Sample: VF2305-ICC2305
Lab FileID: F0078967.D

Response Factor Report GC/MS F

Method : C:\HPCHEM\1\METHODS\VF2305C.M (RTE Integrator)
Title : SW846 8260B and EPA 624
Last Update : Thu Mar 01 07:31:12 2007
Response via : Initial Calibration

Calibration Files
1 =F0078964.D 2 =F0078965.D 3 =F0078966.D
4 =F0078967.D 5 =F0078968.D 6 =F0078969.D 7 =F0078970.D

Compound	1	2	3	4	5	6	7	Avg	%RSD
1) I Fluorobenzene	----------ISTD----------								
2) Dichlorodifluorom	0.157	0.162	0.153	0.171	0.181	0.178	0.196	0.171	8.89
3)P Chloromethane	0.353	0.368	0.326	0.309	0.319	0.297	0.331	0.329	7.50
4)C Vinyl Chloride	0.279	0.316	0.268	0.280	0.287	0.269	0.300	0.286	6.01
5) Bromomethane	0.275	0.253	0.223	0.215	0.216	0.204	0.190	0.225	12.95
6) Chloroethane	0.203	0.232	0.219	0.222	0.222	0.210	0.211	0.217	4.37
7) Trichlorofluorome	0.137	0.154	0.142	0.159	0.166	0.162	0.164	0.155	7.23
8) Acrolein	0.030	0.030	0.031	0.036	0.036	0.033	0.033	0.033	8.00
9)C 1,1-Dichloroethen	0.287	0.299	0.298	0.320	0.322	0.306	0.312	0.306	4.04
10) Freon 113	0.174	0.190	0.191	0.225	0.225	0.213	0.216	0.205	9.65
11) Acetone	0.065	0.062	0.057	0.052	0.053	0.053	0.052	0.056	9.61
12) Iodomethane	0.405	0.432	0.438	0.436	0.447	0.434	0.445	0.434	3.22
13) Methyl acetate	0.199	0.203	0.197	0.179	0.188	0.186	0.185	0.191	4.56
14) Carbon Disulfide	0.833	0.878	0.869	0.908	0.930	0.885	0.918	0.889	3.74
15) Methylene Chlorid	0.410	0.424	0.407	0.404	0.396	0.378	0.376	0.399	4.34
16) Tert Butyl Alcoho	0.015	0.018	0.018	0.015	0.017	0.018	0.018	0.017	8.14
17) trans-1,2-Dichlor	0.328	0.340	0.340	0.344	0.351	0.337	0.344	0.341	2.11
18) Acrylonitrile	0.086	0.099	0.097	0.091	0.097	0.098	0.097	0.095	4.82
19) Methyl Tert Butyl	0.577	0.603	0.572	0.555	0.578	0.587	0.594	0.581	2.70
20) Hexane	0.300	0.281	0.283	0.341	0.346	0.320	0.315	0.312	8.32
21)P 1,1-Dichloroethan	0.428	0.457	0.436	0.445	0.450	0.430	0.435	0.440	2.44
22) Vinyl acetate	0.513	0.554	0.582	0.564	0.569	0.552	0.517	0.550	4.74
23) Di-isopropyl ethe	0.944	1.012	0.992	0.981	0.988	0.943	0.934	0.971	3.09
24) Ethyl tert-butyl	0.721	0.735	0.733	0.737	0.753	0.739	0.749	0.738	1.43
25) 2,2-Dichloropropa	0.208	0.200	0.197	0.210	0.209	0.202	0.195	0.203	2.91
26) cis-1,2-Dichloroe	0.282	0.305	0.302	0.308	0.307	0.302	0.307	0.302	3.03
27) 2-Butanone	0.113	0.118	0.120	0.105	0.111	0.112	0.109	0.113	4.48
28) Bromochloromethan	0.124	0.142	0.145	0.146	0.147	0.149	0.150	0.143	6.13
29)C Chloroform	0.343	0.363	0.358	0.362	0.364	0.353	0.362	0.358	2.09
30) Tetrahydrofuran	0.048	0.035	0.033	0.030	0.031	0.031	0.029	0.034	19.44
----- Linear regression ----- Coefficient = 0.9988									
Response Ratio = 0.00148 + 0.02898 *A									
31) 1,1,1-Trichloroet	0.196	0.201	0.204	0.213	0.218	0.210	0.215	0.208	3.79
32)S Dibromofluorometh	0.211	0.221	0.210	0.217	0.221	0.221	0.226	0.218	2.61
33) Cyclohexane	0.390	0.405	0.413	0.479	0.485	0.453	0.447	0.439	8.43
34) 1,1-Dichloroprope	0.283	0.279	0.292	0.313	0.321	0.312	0.316	0.302	5.61
35) Carbon Tetrachlor	0.142	0.161	0.164	0.176	0.181	0.177	0.183	0.169	8.57
36)S 1,2-Dichloroethan	0.159	0.173	0.166	0.161	0.165	0.162	0.166	0.165	2.76
37) Benzene	1.089	1.108	1.092	1.113	1.134	1.098	1.119	1.108	1.43
38) 1,2-Dichloroethan	0.181	0.193	0.200	0.205	0.200	0.204	0.201	0.198	4.13
39) tert-amyl methyl	0.712	0.774	0.759	0.736	0.767	0.769	0.782	0.757	3.26
40) Trichloroethene	0.212	0.223	0.218	0.229	0.233	0.229	0.236	0.226	3.78
41) Methylcyclohexane	0.318	0.332	0.335	0.391	0.401	0.384	0.388	0.364	9.38
42)C 1,2-Dichloropropa	0.320	0.304	0.310	0.316	0.320	0.310	0.318	0.314	1.90
43) Dibromomethane	0.129	0.147	0.169	0.160	0.166	0.165	0.170	0.158	9.61

Initial Calibration Summary

Job Number: T16432
Account: ITTXHO Shaw E & I, Inc.
Project: Longhorn Army Ammunition Plant

Sample: VF2305-ICC2305
Lab FileID: F0078967.D


```
44)  1,4-Dioxane       0.002 0.002 0.002 0.002 0.003 0.003 0.003 0.002  17.15
            ----- Linear regression -----  Coefficient =  0.9989
              Response Ratio = -0.00341 + 0.00271 *A

45)  Bromodichlorometh 0.287 0.300 0.298 0.307 0.311 0.306 0.317 0.304   3.19
46)  2-Nitropropane    0.046 0.042 0.041 0.037 0.038 0.039 0.038 0.040   7.95
47)  2-Chloroethyl vin 0.094 0.104 0.122 0.125 0.136 0.143 0.152 0.125  16.72
            ----- Linear regression -----  Coefficient =  0.9983
              Response Ratio = -0.06248 + 0.15260 *A

48)  4-Methyl-2-pentan 0.229 0.239 0.249 0.234 0.246 0.246 0.237 0.240   3.06
49)  cis-1,3-Dichlorop 0.369 0.397 0.420 0.427 0.443 0.439 0.454 0.421   6.95

50) I   Chlorobenzene-d5      ----------------ISTD--------------------
51)S Toluene-d8        1.147 1.122 1.060 1.073 1.083 1.079 1.120 1.098   2.89
52)C Toluene           1.382 1.408 1.358 1.387 1.384 1.367 1.417 1.386   1.51
53)  trans-1,3-Dichlor 0.340 0.364 0.391 0.402 0.406 0.409 0.428 0.391   7.65
54)  1,1,2-Trichloroet 0.263 0.295 0.289 0.279 0.283 0.284 0.289 0.283   3.62
55)  Tetrachloroethene 0.272 0.280 0.293 0.302 0.309 0.299 0.307 0.294   4.70
56)  2-hexanone        0.170 0.180 0.203 0.194 0.206 0.211 0.208 0.196   8.04
57)  1,3-Dichloropropa 0.605 0.605 0.602 0.593 0.592 0.591 0.602 0.599   1.05
58)  Dibromochlorometh 0.254 0.312 0.303 0.296 0.299 0.304 0.315 0.298   6.92
59)  1,2-Dibromoethane 0.283 0.310 0.305 0.302 0.314 0.320 0.331 0.309   4.87
60)  1-Chlorohexane    0.464 0.467 0.465 0.505 0.517 0.509 0.535 0.495   5.83
61)P Chlorobenzene     0.877 0.857 0.851 0.870 0.877 0.867 0.897 0.871   1.73
62)  1,1,1,2-Tetrachlo 0.264 0.284 0.283 0.282 0.281 0.279 0.288 0.280   2.74
63)C Ethylbenzene      1.475 1.458 1.433 1.493 1.499 1.470 1.518 1.478   1.90
64)  m,p-Xylene        0.970 0.990 1.008 1.040 1.057 1.039 1.067 1.025   3.51
65)  o-Xylene          1.021 1.033 1.058 1.084 1.107 1.077 1.111 1.070   3.23
66)  Styrene           0.796 0.855 0.910 0.960 0.983 0.978 1.013 0.928   8.44
67)P Bromoform         0.142 0.077 0.184 0.179 0.195 0.199 0.205 0.169  26.85
            ----- Linear regression -----  Coefficient =  0.9995
              Response Ratio = -0.01246 + 0.20679 *A


68) I   1,4-Dichlorobenzene-d ----------------ISTD--------------------
69)  Isopropylbenzene  3.394 3.422 2.803 2.838 2.780 2.731 2.618 2.941  11.11
70)  Cyclohexanone     0.023 0.030 0.027 0.025 0.026 0.029 0.027 0.027   8.23
71)S 4-Bromofluorobenz 1.169 1.004 0.864 0.853 0.853 0.860 0.845 0.921  13.32
72)  Bromobenzene      0.997 0.963 0.842 0.837 0.823 0.822 0.788 0.867   9.15
73)P 1,1,2,2-Tetrachlo 1.339 1.320 1.146 1.011 1.011 1.030 0.983 1.120  13.59
74)  Trans-1,4-Dichlor 0.143 0.182 0.177 0.182 0.188 0.192 0.192 0.179   9.42
75)  1,2,3-Trichloropr 0.257 0.296 0.253 0.232 0.230 0.236 0.225 0.247  10.10
76)  n-Propylbenzene   4.567 4.426 4.010 4.105 4.023 3.954 3.865 4.136   6.29
77)  2-Chlorotoluene   3.164 2.888 2.531 2.500 2.416 2.351 2.285 2.591  12.31
78)  4-Chlorotoluene   2.569 2.376 2.183 2.187 2.133 2.116 2.076 2.234   7.90
79)  1,3,5-Trimethylbe 2.668 2.535 2.320 2.351 2.287 2.250 2.168 2.368   7.33
80)  sec-Butylbenzene  3.329 3.252 3.038 3.232 3.150 3.042 2.937 3.140   4.47
81)  1,3-Dichlorobenze 1.316 1.426 1.364 1.413 1.441 1.419 1.422 1.400   3.16
82)  4-Isopropyltoluen 2.408 2.304 2.224 2.403 2.346 2.277 2.220 2.312   3.37
83)  1,4-Dichlorobenze 1.528 1.430 1.389 1.429 1.420 1.423 1.424 1.435   3.04
84)  tert-Butylbenzene 0.533 0.438 0.430 0.445 0.436 0.429 0.410 0.446   8.90
85)  n-Butylbenzene    1.465 1.572 1.892 2.173 2.149 2.132 2.214 1.942  15.91
            ----- Linear regression -----  Coefficient =  0.9997
              Response Ratio = -0.08322 + 2.22219 *A

86)  1,2-Dichlorobenze 1.206 1.332 1.314 1.336 1.345 1.359 1.369 1.323   4.14
87)  1,2,4-Trimethylbe 2.566 2.449 2.311 2.410 2.354 2.310 2.242 2.377   4.53
88)  1,2-Dibromo-3-Chl 0.068 0.106 0.082 0.072 0.077 0.089 0.088 0.083  15.22
            ----- Linear regression -----  Coefficient =  0.9968
```

Initial Calibration Summary

Job Number: T16432
Account: ITTXHO Shaw E & I, Inc.
Project: Longhorn Army Ammunition Plant

Sample: VF2305-ICC2305
Lab FileID: F0078967.D

```
              Response Ratio = -0.00467 + 0.08863 *A

89)  1,2,4-Trichlorobe 0.166 0.135 0.302 0.403 0.468 0.530 0.585 0.370  47.33
            ----- Linear regression -----  Coefficient =  0.9944
              Response Ratio = -0.09820 + 0.59565 *A

90)  Hexachlorobutadie 0.058 0.088 0.170 0.207 0.204 0.208 0.202 0.162  38.83
            ----- Linear regression -----  Coefficient =  0.9993
              Response Ratio = -0.00579 + 0.20548 *A

91)  Naphthalene       0.526 0.280 0.475 0.606 0.781 0.975 1.125 0.681  43.48
          ----- Quadratic regression -----  Coefficient =  0.9974
              Response Ratio = -0.07686 + 0.74236 *A + 0.10172 *A^2

92)  1,2,3-Trichlorobe 0.167 0.113 0.217 0.276 0.334 0.389 0.421 0.274  41.95
            ----- Linear regression -----  Coefficient =  0.9938
              Response Ratio = -0.07169 + 0.43007 *A

--------------------------------------------------------------------------------
(#) = Out of Range

          VF2305C.M         Thu Mar 01 07:44:03 2007
```

Continuing Calibration Summary

Job Number: T16432
Account: ITTXHO Shaw E & I, Inc.
Project: Longhorn Army Ammunition Plant

Sample: VF2306-CC2305
Lab FileID: F0078995.D

Evaluate Continuing Calibration Report

Data File : C:\HPCHEM\1\DATA\VF2306\F0078995.D Vial: 3
Acq On : 1 Mar 2007 8:23 am Operator: lydiaj
Sample : cc2305-20 Inst : GC/MS F
Misc : ms3868,vf2306,,,,5,1,water Multiplr: 1.00
MS Integration Params: RTEINT.P

Method : C:\HPCHEM\1\METHODS\VF2305CG.M (RTE Integrator)
Title : SW846 8260B and EPA 624
Last Update : Thu Mar 01 11:28:12 2007
Response via : Multiple Level Calibration

Min. RRF : 0.001 Min. Rel. Area : 50% Max. R.T. Dev 0.50min
Max. RRF Dev : 20% Max. Rel. Area : 200%

		Compound	AvgRF	CCRF	%Dev	Area%	Dev(min)
1	I	Fluorobenzene	1.000	1.000	0.0	88	-0.01
2		Dichlorodifluoromethane	0.171	0.152	11.1	88	0.00
3	P	Chloromethane	0.329	0.325	1.2	88	0.00
4	C	Vinyl Chloride	0.286	0.274	4.2	90	-0.01
5		Bromomethane	0.225	0.219	2.7	86	-0.01
6		Chloroethane	0.217	0.214	1.4	86	0.00
7		Trichlorofluoromethane	0.155	0.152	1.9	94	0.00
8		Acrolein	0.033	0.032	3.0	92	-0.01
9	C	1,1-Dichloroethene	0.306	0.283	7.5	83	0.00
10		Freon 113	0.205	0.189	7.8	87	0.00
11		Acetone	0.056	0.048	14.3	74	0.00
12		Iodomethane	0.434	0.403	7.1	81	0.00
13		Methyl acetate	0.191	0.170	11.0	76	0.00
14		Carbon Disulfide	0.889	0.799	10.1	81	0.00
15		Methylene Chloride	0.399	0.393	1.5	85	0.00
16		Tert Butyl Alcohol	0.017	0.014	17.6	67	-0.01
17		trans-1,2-Dichloroethene	0.341	0.314	7.9	81	-0.01
18		Acrylonitrile	0.095	0.081	14.7	73	0.00
19		Methyl Tert Butyl Ether	0.581	0.533	8.3	82	0.00
20		Hexane	0.312	0.302	3.2	94	-0.01
21	P	1,1-Dichloroethane	0.440	0.438	0.5	88	0.00
22		Vinyl acetate	0.550	0.534	2.9	81	0.00
23		Di-isopropyl ether	0.971	0.992	-2.2	88	0.00
24		Ethyl tert-butyl ether	0.738	0.716	3.0	86	0.00
25		2,2-Dichloropropane	0.203	0.207	-2.0	92	0.00
26		cis-1,2-Dichloroethene	0.302	0.289	4.3	84	-0.01
27		2-Butanone	0.113	0.098	13.3	72	-0.01
28		Bromochloromethane	0.143	0.139	2.8	84	0.00
29	C	Chloroform	0.358	0.357	0.3	88	-0.01
30		Tetrahydrofuran	0.034	0.031	8.8	84	0.00
31		1,1,1-Trichloroethane	0.208	0.200	3.8	86	0.00
32	S	Dibromofluoromethane	0.218	0.214	1.8	90	0.00
33		Cyclohexane	0.439	0.415	5.5	88	0.00
34		1,1-Dichloropropene	0.302	0.283	6.3	85	-0.01
35		Carbon Tetrachloride	0.169	0.164	3.0	88	0.00
36	S	1,2-Dichloroethane-d4	0.165	0.162	1.8	86	-0.01
37		Benzene	1.108	1.070	3.4	86	0.00
38		1,2-Dichloroethane	0.198	0.207	-4.5	91	0.00
39		tert-amyl methyl ether	0.757	0.696	8.1	81	0.00
40		Trichloroethene	0.226	0.213	5.8	86	0.00
41		Methylcyclohexane	0.364	0.329	9.6	87	0.00
42	C	1,2-Dichloropropane	0.314	0.306	2.5	87	0.00

Continuing Calibration Summary

Job Number: T16432
Account: ITTXHO Shaw E & I, Inc.
Project: Longhorn Army Ammunition Plant

Sample: VF2306-CC2305
Lab FileID: F0078995.D

43		Dibromomethane	0.158	0.161	-1.9	84	-0.01
44		1,4-Dioxane	0.002	0.002	0.0	79	-0.02
45		Bromodichloromethane	0.304	0.296	2.6	87	0.00
46		2-Nitropropane	0.040	0.035	12.5	75	0.00
47		2-Chloroethyl vinyl ether	0.125	0.095	24.0#	69	0.00
48		4-Methyl-2-pentanone	0.240	0.215	10.4	76	-0.01
49		cis-1,3-Dichloropropene	0.421	0.416	1.2	87	0.00
50	I	Chlorobenzene-d5	1.000	1.000	0.0	90	0.00
51	S	Toluene-d8	1.098	1.054	4.0	90	0.00
52	C	Toluene	1.386	1.315	5.1	87	0.00
53		trans-1,3-Dichloropropene	0.391	0.366	6.4	85	0.00
54		1,1,2-Trichloroethane	0.283	0.265	6.4	83	0.00
55		Tetrachloroethene	0.294	0.285	3.1	88	-0.01
56		2-hexanone	0.196	0.165	15.8	73	0.00
57		1,3-Dichloropropane	0.599	0.560	6.5	84	0.00
58		Dibromochloromethane	0.298	0.283	5.0	84	0.00
59		1,2-Dibromoethane	0.309	0.278	10.0	82	0.00
60		1-Chlorohexane	0.495	0.444	10.3	86	-0.01
61	P	Chlorobenzene	0.871	0.844	3.1	90	-0.01
62		1,1,1,2-Tetrachloroethane	0.280	0.275	1.8	88	-0.01
63	C	Ethylbenzene	1.478	1.399	5.3	88	-0.01
64		m,p-Xylene	1.025	0.993	3.1	89	-0.01
65		o-Xylene	1.070	1.039	2.9	89	-0.01
66		Styrene	0.928	0.889	4.2	88	0.00
67	P	Bromoform	0.169	0.154	8.9	76	-0.01
68	I	1,4-Dichlorobenzene-d4	1.000	1.000	0.0	85	0.00
69		Isopropylbenzene	2.941	2.895	1.6	88	0.00
70		Cyclohexanone	0.027	0.049	-81.5#	155	-0.02
71	S	4-Bromofluorobenzene	0.921	0.906	1.6	89	0.00
72		Bromobenzene	0.867	0.893	-3.0	90	0.00
73	P	1,1,2,2-Tetrachloroethane	1.120	1.016	9.3	75	0.00
74		Trans-1,4-Dichloro-2-Butene	0.179	0.156	12.8	75	-0.01
75		1,2,3-Trichloropropane	0.247	0.237	4.0	80	-0.01
76		n-Propylbenzene	4.136	4.044	2.2	86	0.00
77		2-Chlorotoluene	2.591	2.595	-0.2	87	0.00
78		4-Chlorotoluene	2.234	2.210	1.1	86	-0.01
79		1,3,5-Trimethylbenzene	2.368	2.371	-0.1	87	0.00
80		sec-Butylbenzene	3.140	3.061	2.5	86	0.00
81		1,3-Dichlorobenzene	1.400	1.423	-1.6	89	0.00
82		4-Isopropyltoluene	2.312	2.227	3.7	85	0.00
83		1,4-Dichlorobenzene	1.435	1.395	2.8	85	0.00
84		tert-Butylbenzene	0.446	0.416	6.7	82	-0.01
85		n-Butylbenzene	1.942	1.782	8.2	80	0.00
86		1,2-Dichlorobenzene	1.323	1.297	2.0	84	-0.01
87		1,2,4-Trimethylbenzene	2.377	2.379	-0.1	88	0.00
88		1,2-Dibromo-3-Chloropropane	0.083	0.069	16.9	71	-0.02
89		1,2,4-Trichlorobenzene	0.370	0.253	31.6#	71	0.00
90		Hexachlorobutadiene	0.162	0.147	9.3	74	-0.02
91		Naphthalene	0.681	0.379	44.3#	68	0.00
92		1,2,3-Trichlorobenzene	0.274	0.174	36.5#	68	0.00

Average % D = 7.6

(#) = Out of Range SPCC's out = 0 CCC's out = 0
F0078966.D VF2305CG.M Fri Mar 02 07:49:36 2007

Continuing Calibration Summary

Job Number: T16432
Account: ITTXHO Shaw E & I, Inc.
Project: Longhorn Army Ammunition Plant

Sample: VF2306-CC2276
Lab FileID: F0078996.D

Evaluate Continuing Calibration Report

Data File : C:\HPCHEM\1\DATA\VF2306\F0078996.D Vial: 4
Acq On : 1 Mar 2007 8:55 am Operator: lydiaj
Sample : cc2276-1000 Inst : GC/MS F
Misc : ms3868,vf2306,,,,5,1,water Multiplr: 1.00
MS Integration Params: RTEINT.P

Method : C:\HPCHEM\1\METHODS\VF2305CG.M (RTE Integrator)
Title : SW846 8260B and EPA 624
Last Update : Thu Mar 01 11:28:12 2007
Response via : Multiple Level Calibration

Min. RRF : 0.001 Min. Rel. Area : 50% Max. R.T. Dev 0.50min
Max. RRF Dev : 20% Max. Rel. Area : 200%

		Compound	AvgRF	CCRF	%Dev	Area%	Dev(min)
1	I	Fluorobenzene	1.000	1.000	0.0	92	-0.01
32	S	Dibromofluoromethane	0.218	0.547	-150.9#	239#	0.00
36	S	1,2-Dichloroethane-d4	0.165	0.404	-144.8#	223#	-0.01
50	I	Chlorobenzene-d5	1.000	1.000	0.0	92	0.00
51	S	Toluene-d8	1.098	2.827	-157.5#	244#	0.00
68	I	1,4-Dichlorobenzene-d4	1.000	1.000	0.0	85	0.00
71	S	4-Bromofluorobenzene	0.921	2.369	-157.2#	233#	-0.01
93	I	1,4-Dichlorobenzene-d4a	1.000	1.000	0.0	60	0.02
94	H	TPH-GRO (C6-C10)	6.436	7.083	-10.1	73	0.49

Average % D = 87.6

(#) = Out of Range SPCC's out = 5 CCC's out = 5
F0078966.D VF2305CG.M Fri Mar 02 07:49:41 2007

Initial Calibration Summary

Job Number: T16432
Account: ITTXHO Shaw E & I, Inc.
Project: Longhorn Army Ammunition Plant

Sample: VY1139-ICC1139
Lab FileID: Y0010432.D

Response Factor Report GCMS_Y

Method : C:\MSDCHEM\1\METHODS\VY1139.M (RTE Integrator)
Title : SW846 8260B and EPA 624
Last Update : Wed Feb 28 14:32:23 2007
Response via : Initial Calibration

Calibration Files
1 =Y0010438.D 2 =Y0010437.D 3 =Y0010431.D 4 =Y0010432.D
5 =Y0010433.D 6 =Y0010434.D 7 =Y0010435.D

Compound	1	2	3	4	5	6	7	Avg	%RSD
1) I Fluorobenzene	----------	ISTD	----------						
2) Dichlorodifluorom	0.204	0.236	0.383	0.364	0.360	0.388	0.328	0.323	22.77
---- Linear regression ---- Coefficient = 0.9916									
Response Ratio = 0.02002 + 0.33494 *A									
3)P Chloromethane	0.539	0.497	0.538	0.515	0.513	0.509	0.415	0.504	8.32
4)C Vinyl Chloride	0.627	0.675	0.721	0.674	0.643	0.666	0.565	0.653	7.45
5) Bromomethane	0.308	0.292	0.384	0.357	0.315	0.304	0.279	0.320	11.68
6) Chloroethane	0.303	0.322	0.415	0.371	0.333	0.315	0.281	0.334	13.50
7) Trichlorofluorome	0.242	0.308	0.449	0.428	0.405	0.403	0.372	0.373	19.60
---- Linear regression ---- Coefficient = 0.9972									
Response Ratio = 0.02213 + 0.37411 *A									
8) Acrolein	0.010	0.014	0.015	0.014	0.013	0.012	0.013	14.38	
9)C 1,1-Dichloroethen	0.229	0.179	0.220	0.245	0.240	0.257	0.250	0.231	11.45
10) Freon 113	0.258	0.174	0.278	0.279	0.255	0.260	0.249	0.250	14.18
11) Acetone	0.056	0.061	0.075	0.074	0.067	0.062	0.058	0.065	11.57
12) Iodomethane	0.343	0.342	0.340	0.353	0.352	0.376	0.374	0.354	4.28
13) Methyl acetate	0.174	0.150	0.198	0.200	0.183	0.178	0.168	0.179	9.73
14) Carbon Disulfide	1.107	0.951	1.065	1.058	1.002	1.050	1.031	1.038	4.80
15) Methylene Chlorid	0.414	0.352	0.381	0.348	0.358	0.343	0.354	0.364	6.93
16) Tert Butyl Alcoho	0.017	0.018	0.023	0.023	0.023	0.024	0.024	0.022	13.25
17) trans-1,2-Dichlor	0.324	0.256	0.287	0.293	0.293	0.300	0.293	0.292	6.81
18) Acrylonitrile	0.089	0.092	0.121	0.121	0.113	0.113	0.108	0.108	11.97
19) Hexane	0.234	0.239	0.353	0.398	0.397	0.427	0.411	0.351	23.24
---- Linear regression ---- Coefficient = 0.9992									
Response Ratio = -0.01439 + 0.41738 *A									
20) Methyl Tert Butyl	0.524	0.568	0.647	0.736	0.761	0.779	0.797	0.688	15.78
---- Linear regression ---- Coefficient = 0.9997									
Response Ratio = -0.04096 + 0.80371 *A									
21)P 1,1-Dichloroethan	0.751	0.627	0.754	0.726	0.726	0.726	0.708	0.717	5.98
22) Vinyl acetate	0.376	0.420	0.585	0.622	0.611	0.576	0.551	0.534	18.14
---- Linear regression ---- Coefficient = 0.9977									
Response Ratio = 0.11344 + 0.55357 *A									
23) Di-isopropyl ethe	0.648	0.660	0.830	0.899	0.933	0.921	0.916	0.829	15.03
---- Linear regression ---- Coefficient = 0.9998									
Response Ratio = -0.01640 + 0.92309 *A									
24) Ethyl tert-butyl	0.795	0.827	0.961	1.072	1.153	1.190	1.233	1.033	16.98
---- Linear regression ---- Coefficient = 0.9992									
Response Ratio = -0.08463 + 1.24409 *A									
25) 2,2-Dichloropropa	0.358	0.369	0.384	0.403	0.399	0.384	0.382	0.383	4.08

Initial Calibration Summary

Job Number: T16432
Account: ITTXHO Shaw E & I, Inc.
Project: Longhorn Army Ammunition Plant

Sample: VY1139-ICC1139
Lab FileID: Y0010432.D

```
26)  cis-1,2-Dichloroe 0.298 0.323 0.338 0.347 0.361 0.353 0.345 0.338   6.26
27)  2-Butanone        0.020 0.022 0.030 0.032 0.032 0.030 0.031 0.028  18.27
            ---- Linear regression ----  Coefficient =  0.9988
              Response Ratio = -0.00264 + 0.03144 *A

28)  Bromochloromethan 0.133 0.119 0.136 0.143 0.138 0.135 0.137 0.134   5.57
29)C Chloroform        0.603 0.533 0.596 0.583 0.587 0.576 0.576 0.579   3.91
30)  Tetrahydrofuran   0.049 0.033 0.054 0.056 0.063 0.060 0.059 0.053  18.67
            ---- Linear regression ----  Coefficient =  0.9990
              Response Ratio = -0.00105 + 0.05985 *A

31)  1,1,1-Trichloroet 0.444 0.358 0.434 0.443 0.432 0.443 0.434 0.427   7.20
32)S Dibromofluorometh 0.229 0.249 0.281 0.278 0.268 0.269 0.268 0.263   6.90
33)  Cyclohexane       0.357 0.295 0.503 0.600 0.602 0.627 0.617 0.515  26.44
            ---- Linear regression ----  Coefficient =  0.9996
              Response Ratio = -0.02592 + 0.62605 *A

34)  1,1-Dichloroprope 0.276 0.320 0.386 0.417 0.417 0.430 0.433 0.383  16.00
            ---- Linear regression ----  Coefficient =  0.9999
              Response Ratio = -0.01460 + 0.43570 *A

35)  Carbon Tetrachlor 0.290 0.239 0.314 0.329 0.322 0.324 0.321 0.305  10.51
36)S 1,2-Dichloroethan 0.410 0.388 0.478 0.474 0.459 0.457 0.460 0.446   7.60
37)  Benzene           1.384 1.212 1.407 1.445 1.410 1.460 1.406 1.389   5.92
38)  1,2-Dichloroethan 0.545 0.453 0.591 0.568 0.563 0.540 0.525 0.541   8.20
39)  tert-amyl methyl  0.560 0.595 0.755 0.873 0.896 0.927 0.958 0.795  20.38
            ---- Linear regression ----  Coefficient =  0.9995
              Response Ratio = -0.06051 + 0.96643 *A

40)  Trichloroethene   0.273 0.242 0.256 0.278 0.299 0.296 0.310 0.279   8.75
41)  Methylcyclohexane 0.255 0.209 0.345 0.410 0.411 0.423 0.440 0.356  25.50
            ---- Linear regression ----  Coefficient =  0.9995
              Response Ratio = -0.02902 + 0.44428 *A

42)C 1,2-Dichloropropa 0.435 0.382 0.437 0.441 0.440 0.443 0.441 0.431   5.09
43)  Dibromomethane    0.169 0.187 0.216 0.219 0.206 0.204 0.207 0.201   8.75
44)  1,4-Dioxane             0.002 0.002 0.002 0.003 0.003 0.003 0.003  11.60
45)  Bromodichlorometh 0.399 0.380 0.463 0.473 0.479 0.484 0.487 0.452   9.67
46)  2-Nitropropane    0.042 0.044 0.073 0.075 0.069 0.066 0.061 0.062  21.81
            ---- Linear regression ----  Coefficient =  0.9957
              Response Ratio = 0.02259 + 0.06144 *A

47)  2-Chloroethyl vin 0.076 0.097 0.167 0.187 0.190 0.201 0.217 0.162  33.39
            ---- Linear regression ----  Coefficient =  0.9982
              Response Ratio = -0.10189 + 0.21830 *A

48)  4-Methyl-2-pentan 0.018 0.021 0.031 0.032 0.032 0.031 0.032 0.028  21.39
            ---- Linear regression ----  Coefficient =  0.9998
              Response Ratio = -0.00272 + 0.03194 *A

49)  cis-1,3-Dichlorop 0.407 0.398 0.460 0.523 0.536 0.561 0.578 0.495  14.74

50) I   Chlorobenzene-d5      ----------------ISTD--------------------
51)S Toluene-d8        1.210 1.311 1.388 1.414 1.434 1.481 1.463 1.386   6.89
52)C Toluene           0.907 0.873 1.001 1.075 1.081 1.094 1.055 1.012   8.81
53)  trans-1,3-Dichlor 0.436 0.431 0.481 0.549 0.592 0.607 0.626 0.532  15.42
            ---- Linear regression ----  Coefficient =  0.9993
              Response Ratio = -0.04063 + 0.63175 *A

54)  1,1,2-Trichloroet 0.393 0.358 0.361 0.374 0.373 0.374 0.369 0.372   3.04
```

Initial Calibration Summary

Job Number: T16432
Account: ITTXHO Shaw E & I, Inc.
Project: Longhorn Army Ammunition Plant

Sample: VY1139-ICC1139
Lab FileID: Y0010432.D

```
55)  Tetrachloroethene 0.227 0.242 0.260 0.251 0.262 0.261 0.254 0.251   5.07
56)  2-hexanone        0.097 0.105 0.192 0.197 0.190 0.189 0.177 0.164  26.38
            ---- Linear regression ----  Coefficient =  0.9979
              Response Ratio = 0.02704 + 0.17877 *A

57)  1,3-Dichloropropa 0.725 0.670 0.758 0.736 0.738 0.728 0.706 0.723   3.89
58)  Dibromochlorometh 0.336 0.293 0.334 0.346 0.376 0.378 0.388 0.350   9.46
59)  1,2-Dibromoethane 0.323 0.287 0.336 0.352 0.372 0.377 0.385 0.348  10.07
60)  1-Chlorohexane    0.272 0.253 0.352 0.440 0.486 0.540 0.532 0.411  29.02
            ---- Linear regression ----  Coefficient =  0.9981
              Response Ratio = -0.04776 + 0.54357 *A

61)P Chlorobenzene     1.306 1.011 1.106 1.061 1.107 1.140 1.086 1.117   8.32
62)  1,1,1,2-Tetrachlo 0.354 0.299 0.359 0.344 0.347 0.352 0.347 0.343   5.86
63)C Ethylbenzene      1.601 1.566 1.867 1.931 1.953 2.100 2.042 1.866  11.11
64)  m,p-Xylene        0.614 0.585 0.748 0.773 0.788 0.829 0.751 0.727  12.58
65)  o-Xylene          0.512 0.499 0.624 0.743 0.752 0.831 0.785 0.678  19.68
            ---- Linear regression ----  Coefficient =  0.9983
              Response Ratio = -0.03174 + 0.79995 *A

66)  Styrene           0.660 0.682 0.998 1.210 1.272 1.345 1.319 1.069  27.55
            ---- Linear regression ----  Coefficient =  0.9993
              Response Ratio = -0.07570 + 1.34311 *A

67)P Bromoform         0.163 0.156 0.211 0.219 0.224 0.235 0.247 0.208  16.93
            ---- Linear regression ----  Coefficient =  0.9989
              Response Ratio = -0.01623 + 0.24771 *A


68) I   1,4-Dichlorobenzene-d ----------------ISTD---------------------
69)  Isopropylbenzene  2.181 2.307 2.489 2.886 2.996 3.118 3.352 2.761  15.95
            ---- Linear regression ----  Coefficient =  0.9981
              Response Ratio = -0.28399 + 3.36931 *A

70)  Cyclohexanone     0.023 0.048 0.060 0.056 0.056 0.057 0.056 0.051  25.05
            ---- Linear regression ----  Coefficient =  0.9997
              Response Ratio = 0.00045 + 0.05573 *A

71)S 4-Bromofluorobenz 0.877 0.910 0.980 1.034 0.983 1.042 1.108 0.991   8.02
72)  Bromobenzene      1.003 0.949 0.921 0.890 0.871 0.886 0.846 0.910   5.85
73)P 1,1,2,2-Tetrachlo 1.328 1.049 1.200 1.203 1.097 1.080 1.133 1.156   8.28
74)  Trans-1,4-Dichlor 0.100 0.193 0.299 0.288 0.294 0.301 0.319 0.256  31.35
            ---- Linear regression ----  Coefficient =  0.9990
              Response Ratio = -0.01901 + 0.31993 *A

75)  1,2,3-Trichloropr 1.420 1.301 1.448 1.377 1.333 1.348 1.370 1.371   3.67
76)  n-Propylbenzene   3.107 3.260 3.892 4.230 4.372 4.568 4.785 4.030  15.95
            ---- Linear regression ----  Coefficient =  0.9990
              Response Ratio = -0.32667 + 4.81397 *A

77)  2-Chlorotoluene   2.740 2.773 2.961 2.975 3.071 3.124 3.255 2.986   6.19
78)  4-Chlorotoluene   2.055 2.184 2.316 2.585 2.638 2.713 2.910 2.486  12.40
79)  1,3,5-Trimethylbe 2.086 2.075 2.537 2.701 2.910 2.956 3.085 2.621  15.65
            ---- Linear regression ----  Coefficient =  0.9993
              Response Ratio = -0.19399 + 3.10648 *A

80)  sec-Butylbenzene  2.181 2.435 2.953 3.271 3.422 3.667 3.805 3.105  19.77
            ---- Linear regression ----  Coefficient =  0.9988
              Response Ratio = -0.29966 + 3.84128 *A
```

Initial Calibration Summary

Job Number: T16432
Account: ITTXHO Shaw E & I, Inc.
Project: Longhorn Army Ammunition Plant

Sample: VY1139-ICC1139
Lab FileID: Y0010432.D

```
81)  1,3-Dichlorobenze 1.432 1.437 1.513 1.523 1.578 1.565 1.596 1.521   4.32
82)  4-Isopropyltoluen 1.210 1.571 1.959 2.247 2.406 2.567 2.617 2.082  25.49
            ---- Linear regression ----  Coefficient =  0.9991
              Response Ratio = -0.20374 + 2.65246 *A

83)  1,4-Dichlorobenze 1.888 1.480 1.591 1.609 1.596 1.547 1.577 1.613   8.00
84)  tert-Butylbenzene 1.067 1.098 1.349 1.428 1.495 1.587 1.697 1.389  17.06
            ---- Linear regression ----  Coefficient =  0.9980
              Response Ratio = -0.14547 + 1.70580 *A

85)  n-Butylbenzene    1.383 1.578 2.013 2.356 2.578 2.650 2.871 2.204  25.59
            ---- Linear regression ----  Coefficient =  0.9980
              Response Ratio = -0.28821 + 2.89630 *A

86)  1,2-Dichlorobenze 1.434 1.299 1.465 1.486 1.483 1.527 1.566 1.466   5.78
87)  1,2,4-Trimethylbe 1.871 2.205 2.648 2.818 3.001 3.097 3.255 2.699  18.55
            ---- Linear regression ----  Coefficient =  0.9990
              Response Ratio = -0.23086 + 3.27702 *A

88)  1,2-Dibromo-3-Chl       0.092 0.120 0.118 0.124 0.118 0.128 0.117  10.75
89)  1,2,4-Trichlorobe 0.475 0.475 0.477 0.544 0.637 0.664 0.749 0.574  19.13
            ---- Linear regression ----  Coefficient =  0.9949
              Response Ratio = -0.09714 + 0.75368 *A

90)  Hexachlorobutadie 0.266 0.228 0.238 0.269 0.264 0.278 0.288 0.262   8.16
91)  Naphthalene       0.925 0.827 0.817 1.050 1.250 1.404 1.653 1.132  27.97
            ---- Quadratic regression ----  Coefficient =  0.9993
              Response Ratio = -0.06789 + 1.11655 *A + 0.13943 *A^2

92)  1,2,3-Trichlorobe 0.421 0.427 0.446 0.469 0.526 0.532 0.605 0.489  13.81
--------------------------------------------------------------------------------
(#) = Out of Range

          VY1139.M          Wed Feb 28 15:59:16 2007
```

Continuing Calibration Summary

Job Number: T16432
Account: ITTXHO Shaw E & I, Inc.
Project: Longhorn Army Ammunition Plant

Sample: VY1140-CC1139
Lab FileID: Y0010447.D

Evaluate Continuing Calibration Report

Data File : C:\MSDCHEM\1\DATA\VY1140\Y0010447.D Vial: 2
Acq On : 28 Feb 2007 10:57 am Operator: jennifer
Sample : cc1139-20 Inst : GCMS_Y
Misc : ms3870,vy1140,,,,5,1,water Multiplr: 1.00
MS Integration Params: RTEINT.P

Method : C:\MSDCHEM\1\METHODS\VY1139.M (RTE Integrator)
Title : SW846 8260B and EPA 624
Last Update : Wed Feb 28 14:32:23 2007
Response via : Multiple Level Calibration

Min. RRF : 0.001 Min. Rel. Area : 50% Max. R.T. Dev 0.50min
Max. RRF Dev : 20% Max. Rel. Area : 200%

		Compound	AvgRF	CCRF	%Dev	Area%	Dev(min)	R.T.
1	I	Fluorobenzene	1.000	1.000	0.0	106	0.00	9.58
			Amount	Calc.	%Drift			
2		Dichlorodifluoromethane	20.000	18.794	6.0	101	0.00	3.82
			AvgRF	CCRF	%Dev			
3	P	Chloromethane	0.504	0.569	-12.9	113	0.00	4.18
4	C	Vinyl Chloride	0.653	0.773	-18.4	114	0.00	4.40
5		Bromomethane	0.320	0.405	-26.6#	112	0.00	4.98
6		Chloroethane	0.334	0.427	-27.8#	109	0.00	5.14
			Amount	Calc.	%Drift			
7		Trichlorofluoromethane	20.000	24.290	-21.4#	121	0.00	5.49
			AvgRF	CCRF	%Dev			
8		Acrolein	0.013	0.015	-15.4	115	0.00	6.16
9	C	1,1-Dichloroethene	0.231	0.256	-10.8	124	0.00	6.25
10		Freon 113	0.250	0.274	-9.6	105	0.01	6.18
11		Acetone	0.065	0.071	-9.2	100	0.00	6.34
12		Iodomethane	0.354	0.348	1.7	109	0.00	6.51
13		Methyl acetate	0.179	0.199	-11.2	107	0.00	6.70
14		Carbon Disulfide	1.038	1.100	-6.0	110	0.00	6.59
15		Methylene Chloride	0.364	0.371	-1.9	103	0.00	6.91
16		Tert Butyl Alcohol	0.022	0.024	-9.1	110	0.00	6.93
17		trans-1,2-Dichloroethene	0.292	0.300	-2.7	111	0.00	7.19
18		Acrylonitrile	0.108	0.117	-8.3	102	0.00	7.25
			Amount	Calc.	%Drift			
19		Hexane	20.000	20.438	-2.2	118	0.00	7.41
20		Methyl Tert Butyl Ether	20.000	20.038	-0.2	116	0.00	7.13
			AvgRF	CCRF	%Dev			
21	P	1,1-Dichloroethane	0.717	0.750	-4.6	106	0.00	7.74
			Amount	Calc.	%Drift			
22		Vinyl acetate	100.000	101.221	-1.2	112	0.00	7.70
23		Di-isopropyl ether	20.000	20.175	-0.9	114	0.00	7.64
24		Ethyl tert-butyl ether	20.000	20.339	-1.7	117	0.00	8.05
			AvgRF	CCRF	%Dev			
25		2,2-Dichloropropane	0.383	0.405	-5.7	112	0.00	8.36
26		cis-1,2-Dichloroethene	0.338	0.355	-5.0	111	0.00	8.38

Continuing Calibration Summary

Job Number: T16432
Account: ITTXHO Shaw E & I, Inc.
Project: Longhorn Army Ammunition Plant

Sample: VY1140-CC1139
Lab FileID: Y0010447.D

			Amount	Calc.	%Drift			
27		2-Butanone	100.000	99.629	0.4	107	0.00	8.35
			AvgRF	CCRF	%Dev			
28		Bromochloromethane	0.134	0.139	-3.7	109	0.00	8.65
29	C	Chloroform	0.579	0.611	-5.5	109	0.00	8.70
			Amount	Calc.	%Drift			
30		Tetrahydrofuran	20.000	21.464	-7.3	122	0.00	8.66
			AvgRF	CCRF	%Dev			
31		1,1,1-Trichloroethane	0.427	0.456	-6.8	112	0.00	8.90
32	S	Dibromofluoromethane	0.263	0.309	-17.5	117	0.00	8.87
			Amount	Calc.	%Drift			
33		Cyclohexane	20.000	20.267	-1.3	121	0.00	8.92
34		1,1-Dichloropropene	20.000	19.942	0.3	110	0.00	9.07
			AvgRF	CCRF	%Dev			
35		Carbon Tetrachloride	0.305	0.343	-12.5	116	-0.01	9.05
36	S	1,2-Dichloroethane-d4	0.446	0.544	-22.0#	121	0.00	9.28
37		Benzene	1.389	1.520	-9.4	115	0.00	9.30
38		1,2-Dichloroethane	0.541	0.601	-11.1	108	0.00	9.37
			Amount	Calc.	%Drift			
39		tert-amyl methyl ether	20.000	20.501	-2.5	118	0.00	9.30
			AvgRF	CCRF	%Dev			
40		Trichloroethene	0.279	0.276	1.1	115	0.00	9.95
			Amount	Calc.	%Drift			
41		Methylcyclohexane	20.000	19.084	4.6	108	0.00	10.11
			AvgRF	CCRF	%Dev			
42	C	1,2-Dichloropropane	0.431	0.443	-2.8	108	0.00	10.24
43		Dibromomethane	0.201	0.215	-7.0	106	0.00	10.37
44		1,4-Dioxane	0.003	0.002	33.3#	118	0.00	10.31
45		Bromodichloromethane	0.452	0.483	-6.9	111	0.00	10.48
			Amount	Calc.	%Drift			
46		2-Nitropropane	100.000	97.454	2.5	104	0.00	10.75
47		2-Chloroethyl vinyl ether	100.000	99.196	0.8	106	0.00	10.72
48		4-Methyl-2-pentanone	100.000	103.359	-3.4	108	0.00	11.02
			AvgRF	CCRF	%Dev			
49		cis-1,3-Dichloropropene	0.495	0.493	0.4	114	0.00	10.93
50	I	Chlorobenzene-d5	1.000	1.000	0.0	107	0.00	12.71
51	S	Toluene-d8	1.386	1.568	-13.1	121	0.00	11.18
52	C	Toluene	1.012	1.057	-4.4	113	0.00	11.25
			Amount	Calc.	%Drift			
53		trans-1,3-Dichloropropene	20.000	20.042	-0.2	118	0.00	11.49
			AvgRF	CCRF	%Dev			
54		1,1,2-Trichloroethane	0.372	0.370	0.5	109	0.00	11.70
55		Tetrachloroethene	0.251	0.255	-1.6	104	0.00	11.81
			Amount	Calc.	%Drift			

Continuing Calibration Summary

Job Number: T16432
Account: ITTXHO Shaw E & I, Inc.
Project: Longhorn Army Ammunition Plant

Sample: VY1140-CC1139
Lab FileID: Y0010447.D

56		2-hexanone	100.000	96.252	3.7	103	0.00	11.86
			AvgRF	CCRF	%Dev			
57		1,3-Dichloropropane	0.723	0.771	-6.6	108	0.00	11.89
58		Dibromochloromethane	0.350	0.355	-1.4	113	0.00	12.12
59		1,2-Dibromoethane	0.348	0.345	0.9	109	0.00	12.29
			Amount	Calc.	%Drift			
60		1-Chlorohexane	20.000	18.439	7.8	116	0.00	12.60
			AvgRF	CCRF	%Dev			
61	P	Chlorobenzene	1.117	1.080	3.3	104	0.00	12.74
62		1,1,1,2-Tetrachloroethane	0.343	0.355	-3.5	106	0.00	12.80
63	C	Ethylbenzene	1.866	1.890	-1.3	108	0.00	12.77
64		m,p-Xylene	0.727	0.755	-3.9	108	0.00	12.89
			Amount	Calc.	%Drift			
65		o-Xylene	20.000	18.731	6.3	114	0.00	13.32
66		Styrene	20.000	19.452	2.7	119	0.00	13.34
67	P	Bromoform	20.000	19.980	0.1	104	0.00	13.61
			AvgRF	CCRF	%Dev			
68	I	1,4-Dichlorobenzene-d4	1.000	1.000	0.0	110	0.00	15.11
			Amount	Calc.	%Drift			
69		Isopropylbenzene	20.000	20.248	-1.2	120	0.00	13.66
70		Cyclohexanone	100.000	115.407	-15.4	118	0.00	13.89
			AvgRF	CCRF	%Dev			
71	S	4-Bromofluorobenzene	0.991	1.121	-13.1	126	0.00	13.90
72		Bromobenzene	0.910	0.923	-1.4	110	0.00	14.10
73	P	1,1,2,2-Tetrachloroethane	1.156	1.151	0.4	106	0.00	14.02
			Amount	Calc.	%Drift			
74		Trans-1,4-Dichloro-2-Bute	20.000	21.874	-9.4	111	0.00	14.08
			AvgRF	CCRF	%Dev			
75		1,2,3-Trichloropropane	1.371	1.379	-0.6	105	0.00	14.11
			Amount	Calc.	%Drift			
76		n-Propylbenzene	20.000	19.755	1.2	112	0.00	14.08
			AvgRF	CCRF	%Dev			
77		2-Chlorotoluene	2.986	2.940	1.5	109	0.00	14.25
78		4-Chlorotoluene	2.486	2.390	3.9	114	0.00	14.37
			Amount	Calc.	%Drift			
79		1,3,5-Trimethylbenzene	20.000	19.461	2.7	110	0.00	14.25
80		sec-Butylbenzene	20.000	19.267	3.7	110	0.00	14.82
			AvgRF	CCRF	%Dev			
81		1,3-Dichlorobenzene	1.521	1.465	3.7	107	0.00	15.04
			Amount	Calc.	%Drift			
82		4-Isopropyltoluene	20.000	18.548	7.3	110	0.00	14.95
			AvgRF	CCRF	%Dev			
83		1,4-Dichlorobenzene	1.613	1.513	6.2	105	0.00	15.14

Continuing Calibration Summary

Job Number: T16432
Account: ITTXHO Shaw E & I, Inc.
Project: Longhorn Army Ammunition Plant

Sample: VY1140-CC1139
Lab FileID: Y0010447.D

		Amount	Calc.	%Drift			
84	tert-Butylbenzene	20.000	20.118	-0.6	110	0.00	14.60
85	n-Butylbenzene	20.000	19.118	4.4	112	0.00	15.38

		AvgRF	CCRF	%Dev			
86	1,2-Dichlorobenzene	1.466	1.489	-1.6	112	0.00	15.53

		Amount	Calc.	%Drift			
87	1,2,4-Trimethylbenzene	20.000	19.202	4.0	107	0.00	14.66

		AvgRF	CCRF	%Dev			
88	1,2-Dibromo-3-Chloropropa	0.117	0.132	-12.8	122	0.00	16.33

		Amount	Calc.	%Drift			
89	1,2,4-Trichlorobenzene	20.000	20.887	-4.4	126	0.00	17.16

		AvgRF	CCRF	%Dev			
90	Hexachlorobutadiene	0.262	0.238	9.2	110	0.00	17.24

		Amount	Calc.	%Drift			
91	Naphthalene	20.000	19.286	3.6	129	0.00	17.46

		AvgRF	CCRF	%Dev			
92	1,2,3-Trichlorobenzene	0.489	0.458	6.3	113	0.00	17.73

(#) = Out of Range SPCC's out = 0 CCC's out = 0
Y0010431.D VY1139.M Wed Feb 28 16:30:54 2007

Continuing Calibration Summary

Job Number: T16432
Account: ITTXHO Shaw E & I, Inc.
Project: Longhorn Army Ammunition Plant

Sample: VY1140-ECC1139
Lab FileID: Y0010472.D

Evaluate Continuing Calibration Report

Data File : C:\MSDCHEM\1\DATA\VY1140\Y0010472.D Vial: 27
Acq On : 28 Feb 2007 10:24 pm Operator: jennifer
Sample : ecc1139-20 Inst : GCMS_Y
Misc : ms3870,vy1140,,,,5,1,water Multiplr: 1.00
MS Integration Params: RTEINT.P

Method : C:\MSDCHEM\1\METHODS\VY1139.M (RTE Integrator)
Title : SW846 8260B and EPA 624
Last Update : Wed Feb 28 07:50:18 2007
Response via : Multiple Level Calibration

Min. RRF : 0.001 Min. Rel. Area : 50% Max. R.T. Dev 0.50min
Max. RRF Dev : 20% Max. Rel. Area : 200%

		Compound	AvgRF	CCRF	%Dev	Area%	Dev(min)	R.T.
1	I	Fluorobenzene	1.000	1.000	0.0	91	0.00	9.58
			Amount	Calc.	%Drift			
2		Dichlorodifluoromethane	20.000	21.824	-9.1	99	0.00	3.82
			AvgRF	CCRF	%Dev			
3	P	Chloromethane	0.504	0.509	-1.0	86	0.00	4.18
4	C	Vinyl Chloride	0.653	0.677	-3.7	86	0.00	4.39
5		Bromomethane	0.320	0.354	-10.6	84	0.00	4.98
6		Chloroethane	0.334	0.352	-5.4	78	0.00	5.14
			Amount	Calc.	%Drift			
7		Trichlorofluoromethane	20.000	20.202	-1.0	88	0.00	5.49
			AvgRF	CCRF	%Dev			
8		Acrolein	0.013	0.011	15.4	73	0.01	6.16
9	C	1,1-Dichloroethene	0.231	0.271	-17.3	113	0.00	6.25
10		Freon 113	0.250	0.324	-29.6#	107	0.01	6.18
11		Acetone	0.065	0.078	-20.0	94	0.00	6.33
12		Iodomethane	0.354	0.388	-9.6	104	0.00	6.50
13		Methyl acetate	0.179	0.219	-22.3#	101	0.00	6.70
14		Carbon Disulfide	1.038	1.253	-20.7#	108	0.00	6.60
15		Methylene Chloride	0.364	0.418	-14.8	100	0.00	6.91
16		Tert Butyl Alcohol	0.022	0.024	-9.1	96	0.00	6.93
17		trans-1,2-Dichloroethene	0.292	0.320	-9.6	102	0.00	7.19
18		Acrylonitrile	0.108	0.131	-21.3#	99	0.00	7.26
			Amount	Calc.	%Drift			
19		Hexane	20.000	23.081	-15.4	115	0.00	7.40
20		Methyl Tert Butyl Ether	20.000	21.092	-5.5	105	0.00	7.13
			AvgRF	CCRF	%Dev			
21	P	1,1-Dichloroethane	0.717	0.837	-16.7	102	0.00	7.73
			Amount	Calc.	%Drift			
22		Vinyl acetate	100.000	107.570	-7.6	102	0.00	7.70
23		Di-isopropyl ether	20.000	21.514	-7.6	105	0.00	7.64
24		Ethyl tert-butyl ether	20.000	21.374	-6.9	106	0.00	8.05
			AvgRF	CCRF	%Dev			
25		2,2-Dichloropropane	0.383	0.424	-10.7	101	0.00	8.37
26		cis-1,2-Dichloroethene	0.338	0.392	-16.0	106	0.00	8.38

Continuing Calibration Summary

Job Number: T16432
Account: ITTXHO Shaw E & I, Inc.
Project: Longhorn Army Ammunition Plant

Sample: VY1140-ECC1139
Lab FileID: Y0010472.D

			Amount	Calc.	%Drift			
27		2-Butanone	100.000	99.920	0.1	92	0.00	8.36
			AvgRF	CCRF	%Dev			
28		Bromochloromethane	0.134	0.149	-11.2	100	0.00	8.67
29	C	Chloroform	0.579	0.677	-16.9	104	0.00	8.70
			Amount	Calc.	%Drift			
30		Tetrahydrofuran	20.000	21.564	-7.8	106	0.00	8.67
			AvgRF	CCRF	%Dev			
31		1,1,1-Trichloroethane	0.427	0.496	-16.2	105	0.00	8.91
32	S	Dibromofluoromethane	0.263	0.273	-3.8	89	0.00	8.87
			Amount	Calc.	%Drift			
33		Cyclohexane	20.000	22.378	-11.9	116	0.00	8.92
34		1,1-Dichloropropene	20.000	21.222	-6.1	101	0.00	9.07
			AvgRF	CCRF	%Dev			
35		Carbon Tetrachloride	0.305	0.362	-18.7	106	0.00	9.06
36	S	1,2-Dichloroethane-d4	0.446	0.464	-4.0	89	0.00	9.28
37		Benzene	1.389	1.627	-17.1	106	0.00	9.29
38		1,2-Dichloroethane	0.541	0.626	-15.7	97	0.00	9.37
			Amount	Calc.	%Drift			
39		tert-amyl methyl ether	20.000	21.494	-7.5	108	0.00	9.30
			AvgRF	CCRF	%Dev			
40		Trichloroethene	0.279	0.301	-7.9	108	0.00	9.94
			Amount	Calc.	%Drift			
41		Methylcyclohexane	20.000	21.726	-8.6	109	0.00	10.11
			AvgRF	CCRF	%Dev			
42	C	1,2-Dichloropropane	0.431	0.477	-10.7	100	0.00	10.23
43		Dibromomethane	0.201	0.239	-18.9	101	0.00	10.37
44		1,4-Dioxane	0.003	0.002	33.3#	100	0.00	10.31
45		Bromodichloromethane	0.452	0.516	-14.2	102	0.00	10.48
			Amount	Calc.	%Drift			
46		2-Nitropropane	100.000	111.492	-11.5	100	0.00	10.75
47		2-Chloroethyl vinyl ether	100.000	117.053	-17.1	112	0.00	10.72
48		4-Methyl-2-pentanone	100.000	103.926	-3.9	93	0.00	11.02
			AvgRF	CCRF	%Dev			
49		cis-1,3-Dichloropropene	0.495	0.542	-9.5	108	0.00	10.93
50	I	Chlorobenzene-d5	1.000	1.000	0.0	93	0.00	12.71
51	S	Toluene-d8	1.386	1.298	6.3	87	0.00	11.18
52	C	Toluene	1.012	1.153	-13.9	108	0.00	11.25
			Amount	Calc.	%Drift			
53		trans-1,3-Dichloropropene	20.000	20.492	-2.5	106	0.00	11.49
			AvgRF	CCRF	%Dev			
54		1,1,2-Trichloroethane	0.372	0.402	-8.1	104	0.00	11.70
55		Tetrachloroethene	0.251	0.265	-5.6	95	0.00	11.80
			Amount	Calc.	%Drift			

Continuing Calibration Summary

Job Number: T16432
Account: ITTXHO Shaw E & I, Inc.
Project: Longhorn Army Ammunition Plant

Sample: VY1140-ECC1139
Lab FileID: Y0010472.D

56		2-hexanone	100.000	98.090	1.9	92	0.00	11.86
			AvgRF	CCRF	%Dev			
57		1,3-Dichloropropane	0.723	0.825	-14.1	102	0.00	11.89
58		Dibromochloromethane	0.350	0.363	-3.7	102	0.00	12.12
59		1,2-Dibromoethane	0.348	0.354	-1.7	98	0.00	12.29
			Amount	Calc.	%Drift			
60		1-Chlorohexane	20.000	19.912	0.4	112	0.00	12.60
			AvgRF	CCRF	%Dev			
61	P	Chlorobenzene	1.117	1.132	-1.3	96	0.00	12.74
62		1,1,1,2-Tetrachloroethane	0.343	0.396	-15.5	103	0.00	12.80
63	C	Ethylbenzene	1.866	1.980	-6.1	99	0.00	12.77
64		m,p-Xylene	0.727	0.805	-10.7	100	0.00	12.88
			Amount	Calc.	%Drift			
65		o-Xylene	20.000	20.021	-0.1	108	0.00	13.31
66		Styrene	20.000	20.943	-4.7	114	0.00	13.34
67	P	Bromoform	20.000	21.538	-7.7	100	0.00	13.61
			AvgRF	CCRF	%Dev			
68	I	1,4-Dichlorobenzene-d4	1.000	1.000	0.0	99	0.00	15.11
			Amount	Calc.	%Drift			
69		Isopropylbenzene	20.000	20.957	-4.8	112	0.00	13.66
70		Cyclohexanone	100.000	46.375	53.6#	43	0.00	13.88
			AvgRF	CCRF	%Dev			
71	S	4-Bromofluorobenzene	0.991	0.838	15.4	85	0.00	13.91
72		Bromobenzene	0.910	0.987	-8.5	106	0.00	14.10
73	P	1,1,2,2-Tetrachloroethane	1.156	1.270	-9.9	105	0.00	14.02
			Amount	Calc.	%Drift			
74		Trans-1,4-Dichloro-2-Bute	20.000	21.516	-7.6	98	0.00	14.08
			AvgRF	CCRF	%Dev			
75		1,2,3-Trichloropropane	1.371	1.514	-10.4	104	0.00	14.11
			Amount	Calc.	%Drift			
76		n-Propylbenzene	20.000	20.935	-4.7	108	0.00	14.08
			AvgRF	CCRF	%Dev			
77		2-Chlorotoluene	2.986	3.165	-6.0	106	0.00	14.25
78		4-Chlorotoluene	2.486	2.523	-1.5	108	0.00	14.37
			Amount	Calc.	%Drift			
79		1,3,5-Trimethylbenzene	20.000	20.204	-1.0	104	0.00	14.25
80		sec-Butylbenzene	20.000	19.667	1.7	102	0.00	14.82
			AvgRF	CCRF	%Dev			
81		1,3-Dichlorobenzene	1.521	1.565	-2.9	103	0.00	15.04
			Amount	Calc.	%Drift			
82		4-Isopropyltoluene	20.000	19.629	1.9	106	0.00	14.95
			AvgRF	CCRF	%Dev			
83		1,4-Dichlorobenzene	1.613	1.661	-3.0	104	0.00	15.14

Continuing Calibration Summary

Job Number: T16432
Account: ITTXHO Shaw E & I, Inc.
Project: Longhorn Army Ammunition Plant

Sample: VY1140-ECC1139
Lab FileID: Y0010472.D

		Amount	Calc.	%Drift			
84	tert-Butylbenzene	20.000	20.328	-1.6	101	0.00	14.59
85	n-Butylbenzene	20.000	19.781	1.1	106	0.00	15.38

		AvgRF	CCRF	%Dev			
86	1,2-Dichlorobenzene	1.466	1.586	-8.2	107	0.00	15.54

		Amount	Calc.	%Drift			
87	1,2,4-Trimethylbenzene	20.000	20.433	-2.2	104	0.00	14.66

		AvgRF	CCRF	%Dev			
88	1,2-Dibromo-3-Chloropropa	0.117	0.123	-5.1	102	0.00	16.33

		Amount	Calc.	%Drift			
89	1,2,4-Trichlorobenzene	20.000	20.041	-0.2	106	0.00	17.15

		AvgRF	CCRF	%Dev			
90	Hexachlorobutadiene	0.262	0.281	-7.3	117	0.00	17.24

		Amount	Calc.	%Drift			
91	Naphthalene	20.000	20.017	-0.1	122	0.00	17.46

		AvgRF	CCRF	%Dev			
92	1,2,3-Trichlorobenzene	0.489	0.466	4.7	104	0.00	17.73

(#) = Out of Range SPCC's out = 0 CCC's out = 0
Y0010431.D VY1139.M Thu Mar 01 09:40:04 2007

General Chemistry

6

QC Data Summaries

Includes the following where applicable:

- Method Blank and Blank Spike Summaries
- Duplicate Summaries
- Matrix Spike Summaries
- Instrument Runlogs/QC

METHOD BLANK AND SPIKE RESULTS SUMMARY
GENERAL CHEMISTRY

Login Number: T16432
Account: ITTXHO - Shaw E & I, Inc.
Project: Longhorn Army Ammunition Plant

Analyte	Batch ID	RL	MB Result	Units	Spike Amount	BSP Result	BSP %Recov	QC Limits
Alkalinity, Total as CaCO3	GN11336	5.0	<5.0	mg/l	xxxxxxxx	2500	100.0	80-120%
Chloride	GN11331	1.0	<1.0	mg/l	xxxxxxxx	1030	103.0	92-107%
Nitrogen, Nitrate + Nitrite	GN11291	0.050	<0.050	mg/l	0.500	0.51	102.0	89-112%
Nitrogen, Nitrite	GN11288	0.050	<0.050	mg/l	0.500	0.54	108.0	89-117%
Sulfate	GN11356	10	<10	mg/l	100	95.0	95.0	80-120%
Sulfate	GN11356			mg/l	xxxxxxxx		*	80-120%
Sulfide	GN11286	0.20	<0.20	mg/l	1600	1370	86.0	80-120%
Total Organic Carbon	GN11304	1.0	<1.0	mg/l	25.0	26.0	104.0	83-110%

Associated Samples:
Batch GN11286: T16432-1, T16432-2, T16432-3, T16432-4, T16432-5, T16432-6
Batch GN11288: T16432-1, T16432-2, T16432-3, T16432-4, T16432-5, T16432-6
Batch GN11291: T16432-1, T16432-2, T16432-3, T16432-4, T16432-5, T16432-6
Batch GN11304: T16432-1, T16432-2, T16432-3, T16432-4, T16432-5, T16432-6
Batch GN11331: T16432-1, T16432-2, T16432-3, T16432-4, T16432-5, T16432-6
Batch GN11336: T16432-1, T16432-2, T16432-3, T16432-4, T16432-5, T16432-6
Batch GN11356: T16432-1, T16432-2, T16432-3, T16432-4, T16432-5, T16432-6
(*) Outside of QC limits

DUPLICATE RESULTS SUMMARY
GENERAL CHEMISTRY

Login Number: T16432
Account: ITTXHO - Shaw E & I, Inc.
Project: Longhorn Army Ammunition Plant

Analyte	Batch ID	QC Sample	Units	Original Result	DUP Result	RPD	QC Limits
Alkalinity, Total as CaCO3	GN11336	T16411-10	mg/l	158	165	4.3	0-10%
Nitrogen, Nitrate + Nitrite	GN11291	T16411-10	mg/l	0.20	0.20	0.0	0-10%
Nitrogen, Nitrite	GN11288	T16432-1	mg/l	0.0030 U	<0.050	0.0	0-10%
Sulfate	GN11356	T16411-10	mg/l	1260	1200	4.7	0-20%
Sulfide	GN11286	T16432-6	mg/l	U	<0.20	0.0	0-20%
Total Organic Carbon	GN11304	T16445-18	mg/l	6.0	6.0	0.0	0-11%
pH	GN11306	T16432-4	su	6.3	6.3	0.0	0-6.8%

Associated Samples:
Batch GN11286: T16432-1, T16432-2, T16432-3, T16432-4, T16432-5, T16432-6
Batch GN11288: T16432-1, T16432-2, T16432-3, T16432-4, T16432-5, T16432-6
Batch GN11291: T16432-1, T16432-2, T16432-3, T16432-4, T16432-5, T16432-6
Batch GN11304: T16432-1, T16432-2, T16432-3, T16432-4, T16432-5, T16432-6
Batch GN11306: T16432-1, T16432-2, T16432-3, T16432-4, T16432-5, T16432-6
Batch GN11331: T16432-1, T16432-2, T16432-3, T16432-4, T16432-5, T16432-6
Batch GN11336: T16432-1, T16432-2, T16432-3, T16432-4, T16432-5, T16432-6
Batch GN11356: T16432-1, T16432-2, T16432-3, T16432-4, T16432-5, T16432-6
(*) Outside of QC limits

MATRIX SPIKE RESULTS SUMMARY
GENERAL CHEMISTRY

Login Number: T16432
Account: ITTXHO - Shaw E & I, Inc.
Project: Longhorn Army Ammunition Plant

Analyte	Batch ID	QC Sample	Units	Original Result	Spike Amount	MS Result	%Rec	QC Limits
Alkalinity, Total as CaCO3	GN11336	T16411-10	mg/l	158	xxxxxxxx	215	116.0	79-122%
Nitrogen, Nitrate + Nitrite	GN11291	T16411-10	mg/l	0.20	0.100	0.30	100.0	80-119%
Nitrogen, Nitrate + Nitrite	GN11291	T16411-10	mg/l	0.20	0.100	0.30	100.0	80-119%
Nitrogen, Nitrite	GN11288	T16432-1	mg/l	0.0030 U	0.100	0.090	90.0	75-134%
Sulfate	GN11356	T16411-10	mg/l	1260	250	1470	87.0	75-125%
Sulfate	GN11356	T16411-10	mg/l	1260	xxxxxxxx		*	75-125%
Total Organic Carbon	GN11304	T16445-18	mg/l	6.0	10.0	16.0	100.0	74-121%

Associated Samples:
Batch GN11288: T16432-1, T16432-2, T16432-3, T16432-4, T16432-5, T16432-6
Batch GN11291: T16432-1, T16432-2, T16432-3, T16432-4, T16432-5, T16432-6
Batch GN11304: T16432-1, T16432-2, T16432-3, T16432-4, T16432-5, T16432-6
Batch GN11331: T16432-1, T16432-2, T16432-3, T16432-4, T16432-5, T16432-6
Batch GN11336: T16432-1, T16432-2, T16432-3, T16432-4, T16432-5, T16432-6
Batch GN11356: T16432-1, T16432-2, T16432-3, T16432-4, T16432-5, T16432-6
(*) Outside of QC limits
(N) Matrix Spike Rec. outside of QC limits

MATRIX SPIKE DUPLICATE RESULTS SUMMARY
GENERAL CHEMISTRY

Login Number: T16432
Account: ITTXHO - Shaw E & I, Inc.
Project: Longhorn Army Ammunition Plant

Analyte	Batch ID	QC Sample	Units	Original Result	Spike Amount	MSD Result	RPD	QC Limit

Associated Samples:
Batch GN11336: T16432-1, T16432-2, T16432-3, T16432-4, T16432-5, T16432-6
(*) Outside of QC limits

Misc. Forms

Custody Documents and Other Forms

(Accutest Laboratories Southeast, Inc.)

Includes the following where applicable:

- Chain of Custody

2/23/07 00096224

CHAIN OF CUSTODY

ACCUTEST Laboratories T16432

10165 Harwin, Suite 150 - Houston, TX 77036 - 713-271-4700 fax: 713-271-4770

Page 1 of 1

FED-EX Tracking #	Bottle Order Control #
Accutest Quote #	Accutest Job # T16432

Subcontract Information

Company Name: ALSE-ORLANDO
Project Contact:
Address:
City: ORLANDO State: [redacted] Zip:
Phone No.: Fax No.:

Project Information

Send Report to: Agnesv@accutest.com
Bill to: Accutest Laboratories
Address: 10165 Harwin Drive, Suite 150
City: Houston, TX 77036 State: Zip:
Phone No.: 713-271-4700 / 713-271-4770 Fax No.:
Accutest Purchase Order #:

Requested Analyses

Matrix Codes: DW - Drinking Water; GW - Ground Water; WW - Wastewater; SO - Soil; SL - Sludge; OI - Oil; LIQ - Other Liquid; SOL - Other Solid

Accutest Sample ID	Collection Date	Collection Time	Matrix	# of bottles	HCl	HNO3	H2SO4	ENCORE	NaHSO4	MEOH	NONE	Methane, Ethane, Ethene (RSK147)	Perchlorates	8330 Explosives	LAB USE ONLY
T16432-1	2/21/2007	1020	GW	5	2						3	X	X		
T16432-2	2/21/2007	1458	GW	5	2						3	X	X	X	
T16432-3	2/21/2007	1105	GW	5	2						3	X	X	X	
T16432-4	2/21/2007	1315	GW	5	2						3	X	X		
T16432-5	2/21/2007	1422	GW	5	2						3	X	X		
T16432-6	2/21/2007	1515	GW	5	2						3	X	X	X	

Turnaround Time (Business days)

- [XX] 10 Day *STANDARD*
- [ ] 5 Day *RUSH*
- [ ] 4 Day *RUSH*
- [ ] 3 Day *EMERGENCY*
- [ ] 2 Day *EMERGENCY*
- [ ] 1 Day *EMERGENCY*
- [ ] Other

Approved By:/ Date:

Data Deliverable Information

- [ ] Commercial "A"
- [ ] Commercial "B"
- [XX] TRRP 13
- [XX] Reduced Tier1
- [ ] State Forms
- [ ] EDD Format
- [ ] Other

Commercial "A" = Results Only
Commercial "B" = Results & Standard QC

Comments / Remarks

SAMPLE CUSTODY MUST BE DOCUMENTED BELOW EACH TIME SAMPLES CHANGE POSSESSION, INCLUDING COURIER DELIVERY

Relinquished by Sampler:	Date Time:	Received By:	Relinquished By:	Date Time:	Received By:
1		1	2 [signature]	2/27/07	2
Relinquished by: 3	Date Time:	Received By: 3	Relinquished By: 4	Date Time:	Received By: 4
Relinquished by: 5 FX	Date Time: 09:30 02-28-07	Received By: 5 [signature]	Custody Seal #	Preserved where applicable ☐	On Ice ☐ Cooler Temp. 2.4

2.0 1.8 3.0

7.1

7

T16432: Chain of Custody
Page 1 of 2
Accutest Laboratories Southeast, Inc.

00096225

ACCUTEST LABORATORIES SAMPLE RECEIPT CONFIRMATION

ACCUTEST'S JOB NUMBER: T16432 CLIENT: AL 6C PROJECT: T16432

DATE/TIME RECEIVED: 02-28-07 -09:30 # OF COOLERS RECEIVED: 4 COOLER TEMPS: 2.0, 2.4, 1.8, 3.0

METHOD OF DELIVERY: (FEDEX) UPS ACCUTEST COURIER GREYHOUND DELIVERY OTHER

AIRBILL NUMBERS: 7986 1726 3857

COOLER INFORMATION

- [ ] CUSTODY SEAL NOT PRESENT OR NOT INTACT
- [ ] CHAIN OF CUSTODY NOT RECEIVED (COC)
- [ ] ANALYSIS REQUESTED IS UNCLEAR OR MISSING
- [ ] SAMPLE DATES OR TIMES UNCLEAR OR MISSING
- [ ] TEMPERATURE CRITERIA NOT MET

TRIP BLANK INFORMATION

- [ ] TRIP BLANK PROVIDED
- [X] TRIP BLANK NOT PROVIDED
- [X] TRIP BLANK NOT ON COC
- [ ] TRIP BLANK INTACT
- [ ] TRIP BLANK NOT INTACT
- [ ] RECEIVED WATER TRIP BLANK
- [ ] RECEIVED SOIL TRIP BLANK

SAMPLE INFORMATION

- [ ] SAMPLE LABELS NOT PRESENT ON ALL BOTTLES
- [ ] CORRECT NUMBER OF CONTAINERS USED
- [ ] SAMPLE RECEIVED IMPROPERLY PRESERVED
- [ ] INSUFFICIENT VOLUME FOR ANALYSIS
- [ ] TIMES ON COC DOES NOT MATCH LABEL(S)
- [ ] ID'S ON COC DOES NOT MATCH LABEL(S)
- [ ] VOC VIALS HAVE HEADSPACE (MACRO BUBBLES)
- [ ] BOTTLES RECEIVED BUT ANALYSIS NOT REQUESTED
- [ ] NO BOTTLES RECEIVED FOR ANALYSIS REQUESTED
- [ ] UNCLEAR FILTERING INSTRUCTIONS
- [ ] UNCLEAR COMPOSITING INSTRUCTIONS
- [ ] SAMPLE CONTAINER(S) RECEIVED BROKEN
- [ ] % SOLIDS JAR NOT RECEIVED
- [ ] 5035 FIELD KIT NOT FROZEN WITHIN 48 HOUR'S
- [ ] RESIDUAL CHLORINE PRESENT

(APPLICABLE TO EPA 600 SERIES OR NORTH CAROLINA ORGANICS)

MISC. INFORMATION

NUMBER OF ENCORES ? 0

NUMBER OF 5035 FIELD KITS ? 0

NUMBER OR LAB FILTERED METALS ? 0

SUMMARY OF COMMENTS: * RECEIVED TWO 8330 AMBER, 3 HCL VIALS AND ONE 250 ML BOTTLE FOR SAMPLES #2 AND #3. *RECEIVED 3 HCL VIALS AND ONE 250 ML ~~BOTTLE~~ BOTTLE FOR SAMPLES #1, #4 - #6.

TECHNICIAN SIGNATURE/DATE [signature] 02-28-07 TECHNICIAN SIGNATURE/DATE [signature] 2-28-07 ASBD 10/03/06

7.1

7

T16432: Chain of Custody
Page 2 of 2

GC Volatiles

QC Data Summaries

(Accutest Laboratories Southeast, Inc.)

Includes the following where applicable:

- Method Blank Summaries
- Blank Spike Summaries
- Matrix Spike and Duplicate Summaries
- Surrogate Recovery Summaries
- GC Surrogate Retention Time Summaries
- Initial and Continuing Calibration Summaries

Method Blank Summary

Job Number: T16432
Account: ALGC Accutest Laboratories Gulf Coast, Inc.
Project: ITTXHO: Longhorn Army Ammunition Plant

Sample	File ID	DF	Analyzed	By	Prep Date	Prep Batch	Analytical Batch
GXY995-MB	XY025310.D	1	03/07/07	TD	n/a	n/a	GXY995

The QC reported here applies to the following samples: **Method:** RSKSOP-147/175

T16432-1, T16432-2, T16432-3, T16432-4, T16432-5, T16432-6

CAS No.	Compound	Result	RL	MDL	Units	Q
74-82-8	Methane	ND	0.50	0.30	ug/l	
74-84-0	Ethane	ND	1.0	0.60	ug/l	
74-85-1	Ethene	ND	1.0	0.80	ug/l	

Blank Spike Summary

Job Number: T16432
Account: ALGC Accutest Laboratories Gulf Coast, Inc.
Project: ITTXHO: Longhorn Army Ammunition Plant

Sample	File ID	DF	Analyzed	By	Prep Date	Prep Batch	Analytical Batch
GXY995-BS	XY025311.D	1	03/07/07	TD	n/a	n/a	GXY995

The QC reported here applies to the following samples: **Method:** RSKSOP-147/175

T16432-1, T16432-2, T16432-3, T16432-4, T16432-5, T16432-6

CAS No.	Compound	Spike ug/l	BSP ug/l	BSP %	Limits
74-82-8	Methane	108	90.3	84	54-149
74-84-0	Ethane	219	187	85	57-143
74-85-1	Ethene	290	234	81	57-143

Matrix Spike Summary

Job Number: T16432
Account: ALGC Accutest Laboratories Gulf Coast, Inc.
Project: ITTXHO: Longhorn Army Ammunition Plant

Sample	File ID	DF	Analyzed	By	Prep Date	Prep Batch	Analytical Batch
T16432-6MS	XY025319.D	1	03/07/07	TD	n/a	n/a	GXY995
T16432-6	XY025318.D	1	03/07/07	TD	n/a	n/a	GXY995

The QC reported here applies to the following samples: **Method:** RSKSOP-147/175

T16432-1, T16432-2, T16432-3, T16432-4, T16432-5, T16432-6

CAS No.	Compound	T16432-6 ug/l	Q	Spike ug/l	MS ug/l	MS %	Limits
74-82-8	Methane	0.94		108	110	101	54-149
74-84-0	Ethane	1.0 U		219	225	103	57-143
74-85-1	Ethene	1.0 U		290	291	100	57-143

Duplicate Summary

Job Number: T16432
Account: ALGC Accutest Laboratories Gulf Coast, Inc.
Project: ITTXHO: Longhorn Army Ammunition Plant

Sample	File ID	DF	Analyzed	By	Prep Date	Prep Batch	Analytical Batch
T16432-4DUP	XY025317.D	1	03/07/07	TD	n/a	n/a	GXY995
T16432-4	XY025315.D	1	03/07/07	TD	n/a	n/a	GXY995

The QC reported here applies to the following samples: **Method:** RSKSOP-147/175

T16432-1, T16432-2, T16432-3, T16432-4, T16432-5, T16432-6

CAS No.	Compound	T16432-4 ug/l	Q	DUP ug/l	Q	RPD	Limits
74-82-8	Methane	2.88		3.21		11	24
74-84-0	Ethane	1.0 U		ND		nc	23
74-85-1	Ethene	1.0 U		ND		nc	10

Initial Calibration Summary

Job Number: T16432
Account: ALGC Accutest Laboratories Gulf Coast, Inc.
Project: ITTXHO: Longhorn Army Ammunition Plant

Sample: GXY995-ICC995
Lab FileID: XY025305.D

Response Factor Report VOA5

Method : C:\HPCHEM\2\METHODS\RSK147XY.M (Chemstation Integrator)
Title : Dissolved Gases in Water
Last Update : Thu Mar 08 08:31:33 2007
Response via : Initial Calibration

Calibration Files
1 =XY025301.D 2 =XY025302.D 3 =XY025304.D 4 =XY025303.D
5 =XY025305.D 6 =XY025306.D 7 =XY025307.D

Compound	1	2	3	4	5	6	7	Avg	%RSD
1)c Methane	1.256	2.507	1.576	0.832	1.293	0.961	1.016	1.349 E4	42.09#

---- Linear regr., Force(0,0) ---- Coefficient = 0.9983
Response Ratio = 0.00000 + 10071.12721 *A

2)c Ethylene	2.402	4.239	2.629	1.419	2.516	1.854	1.947	2.429 E4	37.22#

---- Linear regr., Force(0,0) ---- Coefficient = 0.9982
Response Ratio = 0.00000 + 19323.23175 *A

3)c Ethane	2.241	3.960	2.584	1.355	2.483	1.825	1.918	2.338 E4	35.47#

---- Linear regr., Force(0,0) ---- Coefficient = 0.9981
Response Ratio = 0.00000 + 19028.53933 *A

(#) = Out of Range

RSK147XY.M Thu Mar 08 08:36:38 2007

8.5

Initial Calibration Verification

Job Number: T16432
Account: ALGC Accutest Laboratories Gulf Coast, Inc.
Project: ITTXHO: Longhorn Army Ammunition Plant

Sample: GXY995-ICV995
Lab FileID: XY025308.D

Evaluate Continuing Calibration Report

Data File : C:\HPCHEM\2\DATA\030707\XY025308.D Vial: 100
Acq On : 7 Mar 2007 2:55 pm Operator: Trangd
Sample : ICV995-1000 Inst : VOA5
Misc : gc7128,gxy995,,,,, Multiplr: 1.00
IntFile : EVENTS.E

Method : C:\HPCHEM\2\METHODS\RSK147XY.M (Chemstation Integrator)
Title : Dissolved Gases in Water
Last Update : Thu Mar 08 08:31:33 2007
Response via : Multiple Level Calibration

Min. RRF : 0.000 Min. Rel. Area : 50% Max. R.T. Dev 0.50min
Max. RRF Dev : 30% Max. Rel. Area : 150%

	Compound	Amount	Calc.	%Drift	Area%	Dev(min)	RT Window
		Amount	Calc.	%Drift			
1 c	Methane	1000.000	950.295	5.0	74	-0.06	1.13- 1.73
2 c	Ethylene	1000.000	962.910	3.7	74	-0.03	2.85- 3.65
3 c	Ethane	1000.000	991.839	0.8	76	-0.03	3.48- 4.28

(#) = Out of Range SPCC's out = 0 CCC's out = 0
XY025305.D RSK147XY.M Thu Mar 08 08:35:31 2007

Continuing Calibration Summary

Job Number: T16432
Account: ALGC Accutest Laboratories Gulf Coast, Inc.
Project: ITTXHO: Longhorn Army Ammunition Plant

Sample: GXY995-ECC995
Lab FileID: XY025320.D

Evaluate Continuing Calibration Report

Data File : C:\HPCHEM\2\DATA\030707\XY025320.D Vial: 100
Acq On : 7 Mar 2007 5:27 pm Operator: Trangd
Sample : ECC995-10000 Inst : VOA5
Misc : gc7128,gxy995,,,,, Multiplr: 1.00
IntFile : EVENTS.E

Method : C:\HPCHEM\2\METHODS\RSK147XY.M (Chemstation Integrator)
Title : Dissolved Gases in Water
Last Update : Thu Mar 08 08:31:33 2007
Response via : Multiple Level Calibration

Min. RRF : 0.000 Min. Rel. Area : 50% Max. R.T. Dev 0.50min
Max. RRF Dev : 30% Max. Rel. Area : 150%

	Compound	Amount	Calc.	%Drift	Area%	Dev(min)	RT Window
1 c	Methane	10000.000	8882.087	11.2	88	-0.15	1.13- 1.73
2 c	Ethylene	10000.000	9414.704	5.9	93	-0.15	2.85- 3.65
3 c	Ethane	10000.000	9571.545	4.3	95	-0.15	3.48- 4.28

(#) = Out of Range SPCC's out = 0 CCC's out = 0
XY025307.D RSK147XY.M Thu Mar 08 08:36:20 2007

8.5
8

GC Semi-volatiles

QC Data Summaries

(Accutest Laboratories Southeast, Inc.)

Includes the following where applicable:

- Method Blank Summaries
- Blank Spike Summaries
- Matrix Spike and Duplicate Summaries
- Surrogate Recovery Summaries
- GC Surrogate Retention Time Summaries
- Initial and Continuing Calibration Summaries

Method Blank Summary

Job Number: T16432
Account: ALGC Accutest Laboratories Gulf Coast, Inc.
Project: ITTXHO: Longhorn Army Ammunition Plant

Sample	File ID	DF	Analyzed	By	Prep Date	Prep Batch	Analytical Batch
OP19677-MB	GG020203.D	1	03/02/07	MRE	03/01/07	OP19677	GGG906

The QC reported here applies to the following samples: **Method:** SW846 8330A

T16432-2, T16432-3

CAS No.	Compound	Result	RL	MDL	Units	Q
2691-41-0	HMX	ND	0.20	0.060	ug/l	
121-82-4	RDX	ND	0.20	0.075	ug/l	
99-65-0	1,3-Dinitrobenzene	ND	0.20	0.070	ug/l	
606-20-2	2,6-Dinitrotoluene	ND	0.20	0.065	ug/l	
121-14-2	2,4-Dinitrotoluene	ND	0.20	0.075	ug/l	
35572-78-2	2-amino-4,6-Dinitrotoluene	ND	0.20	0.070	ug/l	
19406-51-0	4-amino-2,6-Dinitrotoluene	ND	0.20	0.080	ug/l	
98-95-3	Nitrobenzene	ND	0.20	0.060	ug/l	
88-72-2	o-Nitrotoluene	ND	0.20	0.060	ug/l	
99-08-1	m-Nitrotoluene	ND	0.20	0.075	ug/l	
99-99-0	p-Nitrotoluene	ND	0.20	0.075	ug/l	
479-45-8	Tetryl	ND	0.20	0.075	ug/l	
99-35-4	1,3,5-Trinitrobenzene	ND	0.20	0.095	ug/l	
118-96-7	2,4,6-Trinitrotoluene	ND	0.20	0.080	ug/l	

CAS No.	Surrogate Recoveries		Limits
610-39-9	3,4-Dinitrotoluene	102%	70-136%

Method Blank Summary

Job Number: T16432
Account: ALGC Accutest Laboratories Gulf Coast, Inc.
Project: ITTXHO: Longhorn Army Ammunition Plant

Sample	File ID	DF	Analyzed	By	Prep Date	Prep Batch	Analytical Batch
OP19677-MB	GG020233.D	1	03/05/07	MRE	03/01/07	OP19677	GGG907

The QC reported here applies to the following samples: **Method:** SW846 8330A

T16432-2, T16432-3

CAS No.	Compound	Result	RL	MDL	Units	Q
2691-41-0	HMX	ND	0.20	0.060	ug/l	
121-82-4	RDX	ND	0.20	0.075	ug/l	
99-65-0	1,3-Dinitrobenzene	ND	0.20	0.070	ug/l	
606-20-2	2,6-Dinitrotoluene	ND	0.20	0.065	ug/l	
121-14-2	2,4-Dinitrotoluene	ND	0.20	0.075	ug/l	
35572-78-2	2-amino-4,6-Dinitrotoluene	ND	0.20	0.070	ug/l	
19406-51-0	4-amino-2,6-Dinitrotoluene	ND	0.20	0.080	ug/l	
98-95-3	Nitrobenzene	ND	0.20	0.060	ug/l	
88-72-2	o-Nitrotoluene	ND	0.20	0.060	ug/l	
99-08-1	m-Nitrotoluene	ND	0.20	0.075	ug/l	
99-99-0	p-Nitrotoluene	ND	0.20	0.075	ug/l	
479-45-8	Tetryl	ND	0.20	0.075	ug/l	
99-35-4	1,3,5-Trinitrobenzene	ND	0.20	0.095	ug/l	
118-96-7	2,4,6-Trinitrotoluene	ND	0.20	0.080	ug/l	

CAS No.	Surrogate Recoveries		Limits
610-39-9	3,4-Dinitrotoluene	80%	70-136%

Blank Spike Summary

Job Number: T16432
Account: ALGC Accutest Laboratories Gulf Coast, Inc.
Project: ITTXHO: Longhorn Army Ammunition Plant

Sample	File ID	DF	Analyzed	By	Prep Date	Prep Batch	Analytical Batch
OP19677-BS	GG020202.D	1	03/02/07	MRE	03/01/07	OP19677	GGG906

The QC reported here applies to the following samples: **Method:** SW846 8330A

T16432-2, T16432-3

CAS No.	Compound	Spike ug/l	BSP ug/l	BSP %	Limits
2691-41-0	HMX	5	5.3	106	74-152
121-82-4	RDX	5	5.4	108	80-124
99-65-0	1,3-Dinitrobenzene	5	5.3	106	84-123
606-20-2	2,6-Dinitrotoluene	5	5.3	106	84-133
121-14-2	2,4-Dinitrotoluene	5	5.1	102	77-116
35572-78-2	2-amino-4,6-Dinitrotoluene	5	5.2	104	78-117
19406-51-0	4-amino-2,6-Dinitrotoluene	5	5.1	102	84-123
98-95-3	Nitrobenzene	5	5.5	110	76-128
88-72-2	o-Nitrotoluene	5	5.0	100	76-120
99-08-1	m-Nitrotoluene	5	5.2	104	74-124
99-99-0	p-Nitrotoluene	5	5.3	106	81-125
479-45-8	Tetryl	5	4.6	92	62-117
99-35-4	1,3,5-Trinitrobenzene	5	5.3	106	85-127
118-96-7	2,4,6-Trinitrotoluene	5	5.3	106	71-128

CAS No.	Surrogate Recoveries	BSP	Limits
610-39-9	3,4-Dinitrotoluene	124%	70-136%

Blank Spike Summary

Job Number: T16432
Account: ALGC Accutest Laboratories Gulf Coast, Inc.
Project: ITTXHO: Longhorn Army Ammunition Plant

Sample	File ID	DF	Analyzed	By	Prep Date	Prep Batch	Analytical Batch
OP19677-BS	GG020232.D	1	03/05/07	MRE	03/01/07	OP19677	GGG907

The QC reported here applies to the following samples: **Method:** SW846 8330A

T16432-2, T16432-3

CAS No.	Compound	Spike ug/l	BSP ug/l	BSP %	Limits
2691-41-0	HMX	5	5.9	118	74-152
121-82-4	RDX	5	5.5	110	80-124
99-65-0	1,3-Dinitrobenzene	5	5.3	106	84-123
606-20-2	2,6-Dinitrotoluene	5	5.1	102	84-133
121-14-2	2,4-Dinitrotoluene	5	5.1	102	77-116
35572-78-2	2-amino-4,6-Dinitrotoluene	5	5.2	104	78-117
19406-51-0	4-amino-2,6-Dinitrotoluene	5	5.1	102	84-123
98-95-3	Nitrobenzene	5	6.4	128	76-128
88-72-2	o-Nitrotoluene	5	5.0	100	76-120
99-08-1	m-Nitrotoluene	5	5.3	106	74-124
99-99-0	p-Nitrotoluene	5	5.3	106	81-125
479-45-8	Tetryl	5	4.6	92	62-117
99-35-4	1,3,5-Trinitrobenzene	5	5.5	110	85-127
118-96-7	2,4,6-Trinitrotoluene	5	5.7	114	71-128

CAS No.	Surrogate Recoveries	BSP	Limits
610-39-9	3,4-Dinitrotoluene	100%	70-136%

Matrix Spike/Matrix Spike Duplicate Summary

Job Number: T16432
Account: ALGC Accutest Laboratories Gulf Coast, Inc.
Project: ITTXHO: Longhorn Army Ammunition Plant

Sample	File ID	DF	Analyzed	By	Prep Date	Prep Batch	Analytical Batch
OP19677-MS	GG020207.D	1	03/02/07	MRE	03/01/07	OP19677	GGG906
OP19677-MSD	GG020208.D	1	03/02/07	MRE	03/01/07	OP19677	GGG906
F47539-3	GG020206.D	1	03/02/07	MRE	03/01/07	OP19677	GGG906

The QC reported here applies to the following samples: **Method:** SW846 8330A

T16432-2, T16432-3

CAS No.	Compound	F47539-3 ug/l	Q	Spike ug/l	MS ug/l	MS %	MSD ug/l	MSD %	RPD	Limits Rec/RPD
2691-41-0	HMX	ND		10	11.0	110	11.8	118	7	74-152/21
121-82-4	RDX	ND		10	10.3	103	10.7	107	4	80-124/20
99-65-0	1,3-Dinitrobenzene	ND		10	10.3	103	10.9	109	6	84-123/23
606-20-2	2,6-Dinitrotoluene	ND		10	9.9	99	10.6	106	7	84-133/23
121-14-2	2,4-Dinitrotoluene	ND		10	9.7	97	10.3	103	6	77-116/26
35572-78-2	2-amino-4,6-Dinitrotoluene	ND		10	9.4	94	10.5	105	11	78-117/28
19406-51-0	4-amino-2,6-Dinitrotoluene	ND		10	9.1	91	10.2	102	11	84-123/27
98-95-3	Nitrobenzene	ND		10	10.5	105	11.1	111	6	76-128/28
88-72-2	o-Nitrotoluene	ND		10	9.3	93	10.2	102	9	76-120/30
99-08-1	m-Nitrotoluene	ND		10	9.5	95	10.6	106	11	74-124/32
99-99-0	p-Nitrotoluene	ND		10	9.7	97	10.7	107	10	81-125/34
479-45-8	Tetryl	ND		10	7.4	74	7.9	79	7	62-117/28
99-35-4	1,3,5-Trinitrobenzene	ND		10	9.8	98	10.4	104	6	85-127/21
118-96-7	2,4,6-Trinitrotoluene	ND		10	9.8	98	10.4	104	6	71-128/21

CAS No.	Surrogate Recoveries	MS	MSD	F47539-3	Limits
610-39-9	3,4-Dinitrotoluene	94%	98%	102%	70-136%

Semivolatile Surrogate Recovery Summary

Job Number: T16432
Account: ALGC Accutest Laboratories Gulf Coast, Inc.
Project: ITTXHO: Longhorn Army Ammunition Plant

Method: SW846 8330A **Matrix:** AQ

Samples and QC shown here apply to the above method

Lab Sample ID	Lab File ID	S1 [a]
T16432-2	GG020210.D	95.0
T16432-3	GG020211.D	97.0
OP19677-BS	GG020202.D	124.0
OP19677-BS	GG020232.D	100.0
OP19677-MB	GG020203.D	102.0
OP19677-MB	GG020233.D	80.0
OP19677-MS	GG020207.D	94.0
OP19677-MSD	GG020208.D	98.0

Surrogate Compounds	Recovery Limits
S1 = 3,4-Dinitrotoluene	70-136%

(a) Recovery from GC signal #1

GC Surrogate Retention Time Summary

Job Number: T16432
Account: ALGC Accutest Laboratories Gulf Coast, Inc.
Project: ITTXHO: Longhorn Army Ammunition Plant

Check Std:	GGG906-CC825	**Injection Date:**	03/02/07
Lab File ID:	GG020201.D	**Injection Time:**	16:17
Instrument ID:	GCGG	**Method:**	SW846 8330A

	S1 [a] **RT**
Check Std	13.50

Lab Sample ID	**Lab File ID**	**Date Analyzed**	**Time Analyzed**	**S1** [a] **RT**
OP19677-BS	GG020202.D	03/02/07	16:45	13.49
OP19677-MB	GG020203.D	03/02/07	17:12	13.50
ZZZZZZ	GG020204.D	03/02/07	17:27	13.50
ZZZZZZ	GG020205.D	03/02/07	17:54	13.50
F47539-3	GG020206.D	03/02/07	18:22	13.49
OP19677-MS	GG020207.D	03/02/07	18:50	13.47
OP19677-MSD	GG020208.D	03/02/07	19:17	13.46
ZZZZZZ	GG020209.D	03/02/07	19:45	13.47
T16432-2	GG020210.D	03/02/07	20:12	13.44
T16432-3	GG020211.D	03/02/07	20:40	13.43

Surrogate Compounds

S1 = 3,4-Dinitrotoluene

(a) Retention time from GC signal #1

GC Surrogate Retention Time Summary

Job Number: T16432
Account: ALGC Accutest Laboratories Gulf Coast, Inc.
Project: ITTXHO: Longhorn Army Ammunition Plant

Check Std:	GGG907-CC827	**Injection Date:**	03/05/07
Lab File ID:	GG020231.D	**Injection Time:**	13:23
Instrument ID:	GCGG	**Method:**	SW846 8330A

	S1 [a] RT	S1 [b] RT
Check Std	10.72	10.72

Lab Sample ID	Lab File ID	Date Analyzed	Time Analyzed	S1 [a] RT	S1 [b] RT
OP19677-BS	GG020232.D	03/05/07	13:43	10.72	
OP19677-MB	GG020233.D	03/05/07	14:02	10.72	
ZZZZZZ	GG020234.D	03/05/07	14:22	10.72	
ZZZZZZ	GG020236.D	03/05/07	15:01	10.71	
GGG907-ECC827	GG020238.D	03/05/07	15:40	10.72	10.72

Surrogate Compounds

S1 = 3,4-Dinitrotoluene

(a) Retention time from GC signal #1
(b) Retention time from GC signal #2

Initial Calibration Summary

Job Number: T16432
Account: ALGC Accutest Laboratories Gulf Coast, Inc.
Project: ITTXHO: Longhorn Army Ammunition Plant

Sample: GGG825-ICC825
Lab FileID: GG018282.D

Response Factor Report G1315B

Method : C:\HPCHEM\1\METHODS\8330_EX.M (Chemstation Integrator)
Title : Explosives by 8330
Last Update : Thu Oct 19 11:32:41 2006
Response via : Initial Calibration

Calibration Files
20 =GG018279.D 100 =GG018280.D 250 =GG018281.D 500 =GG018282.D
750 =GG018283.D 1000=GG018284.D 2000=GG018285.D ICV =GG018286.D

Compound	20	100	250	500	750	1000	2000	ICV	Avg	%RSD
1) HMX	2.870	2.789	2.757	2.694	2.719	2.735	2.786		2.764 E3	2.09
2) TNX	5.916	6.424	6.486	6.331	6.453	6.468	6.587		6.381 E3	3.43
3) DNX	4.900	5.156	5.125	4.986	5.037	5.057	5.155		5.059 E3	1.88
4) MNX	4.909	4.991	4.972	4.807	4.886	4.901	4.995		4.923 E3	1.38
5) RDX	3.185	3.565	3.625	3.500	3.554	3.547	3.609		3.512 E3	4.27
6) 1,3,5-Trinit	7.763	7.813	7.689	7.436	7.595	7.612	7.763		7.667 E3	1.70
7) 1,3-Dinitrob	1.069	1.070	1.060	1.029	1.047	1.051	1.071		1.057 E4	1.49
8) Tetryl	6.130	6.168	6.180	6.004	6.091	6.096	6.221		6.127 E3	1.17
9) Nitrobenzene	7.057	7.032	7.019	6.708	6.915	6.920	7.082		6.962 E3	1.85
10) 3,4-Dinitrot	4.667	4.752	4.687	4.537	4.621	4.631	4.731		4.661 E3	1.56
11) 2,4,6-Trinit	7.275	7.409	7.373	7.143	7.282	7.301	7.456		7.320 E3	1.42
12) 4-Amino-2,6-	5.266	5.304	5.264	5.117	5.194	5.220	5.330		5.242 E3	1.37
13) 2-Amino-4,6-	7.249	7.203	7.187	7.006	7.130	7.155	7.311		7.177 E3	1.35
14) 2,6-Dinitrot	5.524	5.133	5.010	4.844	4.942	4.954	5.071		5.068 E3	4.37
15) 2,4-Dinitrot	1.149	1.009	0.992	0.958	0.976	0.978	0.999		1.009 E4	6.36
16) o-Nitrotolue	5.044	4.558	4.542	4.244	4.403	4.414	4.516		4.532 E3	5.53
17) p-Nitrotolue	4.102	3.815	3.790	3.596	3.734	3.734	3.831		3.800 E3	4.06
18) m-Nitrotolue	4.959	4.808	4.856	4.629	4.803	4.812	4.942		4.830 E3	2.26

Signal #2

1) HMX	8.151	8.148	8.190	8.012	8.090	8.092	8.238		8.132 E3	0.91
2) TNX	0.956	0.980	0.995	0.969	0.984	0.985	1.001		0.981 E4	1.55
3) DNX	7.525	8.044	8.332	7.974	7.996	7.991	8.136		8.000 E3	3.05
4) MNX	7.756	7.781	7.940	7.696	7.742	7.746	7.895		7.794 E3	1.14
5) RDX	4.720	5.727	5.947	5.855	5.997	5.944	6.042		5.748 E3	8.08
6) 1,3,5-Trinit	1.479	1.619	1.553	1.513	1.538	1.540	1.572		1.545 E4	2.85
7) 1,3-Dinitrob	1.225	1.286	1.279	1.246	1.265	1.272	1.295		1.267 E4	1.91
8) Tetryl	1.037	1.106	1.123	1.092	1.106	1.105	1.129		1.100 E4	2.76
9) Nitrobenzene	3.263	3.394	3.343	3.176	3.205	3.190	3.274		3.264 E3	2.50
10) 3,4-Dinitrot	6.324	6.522	6.468	6.218	6.242	6.243	6.394		6.344 E3	1.89
11) 2,4,6-Trinit	1.070	1.106	1.085	1.048	1.060	1.064	1.089		1.075 E4	1.85
12) 4-Amino-2,6-	1.430	1.457	1.434	1.391	1.407	1.413	1.444		1.425 E4	1.62
13) 2-Amino-4,6-	1.240	1.240	1.201	1.171	1.189	1.194	1.223		1.208 E4	2.20
14) 2,6-Dinitrot	8.005	7.244	6.878	6.645	6.758	6.778	6.958		7.038 E3	6.64
15) 2,4-Dinitrot	1.102	0.930	0.906	0.880	0.888	0.892	0.911		0.930 E4	8.36
16) o-Nitrotolue	5.194	4.804	4.848	4.493	4.691	4.697	4.799		4.789 E3	4.46
17) p-Nitrotolue	7.934	7.544	7.631	7.143	7.472	7.477	7.640		7.549 E3	3.15
18) m-Nitrotolue	6.835	7.097	7.192	6.782	7.103	7.117	7.290		7.060 E3	2.62

(#) = Out of Range ### Number of calibration levels exceeded format ###

8330_EX.M Fri Oct 20 16:25:52 2006

Initial Calibration Verification

Job Number: T16432
Account: ALGC Accutest Laboratories Gulf Coast, Inc.
Project: ITTXHO: Longhorn Army Ammunition Plant

Sample: GGG825-ICV825
Lab FileID: GG018286.D

Evaluate Continuing Calibration Report

Signal #1 : G:\HPCHEM\1\DATA\1018ODS\GG018286.D\dad1B.ch Vial: 10
Signal #2 : G:\HPCHEM\1\DATA\1018ODS\GG018286.D\dad1A.ch
Acq On : 18-Oct-2006, 17:39:03 Operator: MIKEE
Sample : ICV825-500 Inst : G1315B
Misc : OP18202,ggg825,1000,,,10,,water Multiplr: 1.00
IntFile Signal #1: EVENTS.E IntFile Signal #2: EVENTS2.E

Method : C:\HPCHEM\1\METHODS\8330_EX.M (Chemstation Integrator)
Title : Explosives by 8330
Last Update : Thu Oct 19 11:32:41 2006
Response via : Multiple Level Calibration

Min. RRF : 0.000 Min. Rel. Area : 50% Max. R.T. Dev 0.50min
Max. RRF Dev : 15% Max. Rel. Area : 200%

	Compound	Amount	Calc.	%Drift	Area%	Dev(min)	RT Window
1	HMX	500.000	531.119	-6.2	0	0.00	3.83- 4.83
2	TNX		----------NA----------				
3	DNX		----------NA----------				
4	MNX		----------NA----------				
5	RDX	500.000	507.091	-1.4	0	0.00	6.10- 7.10
6	1,3,5-Trinitrobenzene	500.000	533.853	-6.8	0	0.00	8.41- 9.41
7	1,3-Dinitrobenzene	500.000	523.924	-4.8	0	0.00	10.38-11.38
8	Tetryl	500.000	484.365	3.1	0	0.00	11.18-12.18
9	Nitrobenzene	500.000	531.046	-6.2	0	0.00	11.86-12.86
10 S	3,4-Dinitrotoluene		----------NA----------				
11	2,4,6-Trinitrotoluene	500.000	507.486	-1.5	0	0.00	13.56-14.56
12	4-Amino-2,6-Dinitrotol	500.000	515.885	-3.2	0	0.00	14.25-15.25
13	2-Amino-4,6-Dinitrotol	500.000	480.846	3.8	0	0.00	15.03-16.03
14	2,6-Dinitrotoluene	500.000	496.634	0.7	0	0.00	16.01-17.01
15	2,4-Dinitrotoluene	500.000	502.401	-0.5	0	0.00	16.52-17.52
16	o-Nitrotoluene	500.000	501.204	-0.2	0	0.00	19.59-20.59
17	p-Nitrotoluene	500.000	520.375	-4.1	0	0.00	20.92-21.92
18	m-Nitrotoluene	500.000	509.118	-1.8	0	0.00	22.61-23.61

***** Signal #2 *****

1	HMX	500.000	537.899	-7.6	0	0.00	3.83- 4.83
2	TNX		----------NA----------				
3	DNX		----------NA----------				
4	MNX		----------NA----------				
5	RDX	500.000	525.299	-5.1	0	0.00	6.10- 7.10
6	1,3,5-Trinitrobenzene	500.000	533.889	-6.8	0	0.00	8.41- 9.41
7	1,3-Dinitrobenzene	500.000	529.524	-5.9	0	0.00	10.38-11.38
8	Tetryl	500.000	489.295	2.1	0	0.00	11.18-12.18
9	Nitrobenzene	500.000	531.782	-6.4	0	0.00	11.86-12.86
10 S	3,4-Dinitrotoluene		----------NA----------				
11	2,4,6-Trinitrotoluene	500.000	505.844	-1.2	0	0.00	13.56-14.56
12	4-Amino-2,6-Dinitrotol	500.000	516.203	-3.2	0	0.00	14.25-15.25
13	2-Amino-4,6-Dinitrotol	500.000	480.458	3.9	0	0.00	15.03-16.03
14	2,6-Dinitrotoluene	500.000	493.423	1.3	0	0.00	16.01-17.01
15	2,4-Dinitrotoluene	500.000	499.987	0.0	0	0.00	16.52-17.52
16	o-Nitrotoluene	500.000	503.639	-0.7	0	0.00	19.59-20.59
17	p-Nitrotoluene	500.000	523.730	-4.7	0	0.00	20.92-21.92
18	m-Nitrotoluene	500.000	512.492	-2.5	0	0.00	22.61-23.61

Initial Calibration Verification

Job Number: T16432
Account: ALGC Accutest Laboratories Gulf Coast, Inc.
Project: ITTXHO: Longhorn Army Ammunition Plant

Sample: GGG825-ICV825
Lab FileID: GG018286.D

```
(#) = Out of Range                SPCC's out = 0  CCC's out = 0
 GG018286.D 8330_EX.M        Fri Oct 20 16:26:22 2006
```

Initial Calibration Verification

Job Number: T16432
Account: ALGC Accutest Laboratories Gulf Coast, Inc.
Project: ITTXHO: Longhorn Army Ammunition Plant

Sample: GGG826-ICV825
Lab FileID: GG018300.D

Evaluate Continuing Calibration Report

Signal #1 : G:\HPCHEM\1\DATA\1019ODS\GG018300.D\dad1B.ch Vial: 4
Signal #2 : G:\HPCHEM\1\DATA\1019ODS\GG018300.D\dad1A.ch
Acq On : 19-Oct-2006, 13:44:13 Operator: MIKEE
Sample : ICV825-500 Inst : G1315B
Misc : OP18222,ggg826,1000,,,10,,water Multiplr: 1.00
IntFile Signal #1: EVENTS.E IntFile Signal #2: EVENTS2.E

Method : C:\HPCHEM\1\METHODS\8330_EX.M (Chemstation Integrator)
Title : Explosives by 8330
Last Update : Thu Oct 19 11:32:41 2006
Response via : Multiple Level Calibration

Min. RRF : 0.000 Min. Rel. Area : 50% Max. R.T. Dev 0.50min
Max. RRF Dev : 15% Max. Rel. Area : 200%

		Compound	Amount	Calc.	%Drift	Area%	Dev(min)	RT Window
1		HMX		----------NA----------				
2		TNX	500.000	514.364	-2.9	0	0.00	4.15- 5.15
3		DNX	500.000	511.166	-2.2	0	0.00	4.58- 5.58
4		MNX	500.000	518.059	-3.6	0	-0.01	5.34- 6.34
5		RDX		----------NA----------				
6		1,3,5-Trinitrobenzene		----------NA----------				
7		1,3-Dinitrobenzene		----------NA----------				
8		Tetryl		----------NA----------				
9		Nitrobenzene		----------NA----------				
10	S	3,4-Dinitrotoluene		----------NA----------				
11		2,4,6-Trinitrotoluene		----------NA----------				
12		4-Amino-2,6-Dinitrotoluen		----------NA----------				
13		2-Amino-4,6-Dinitrotoluen		----------NA----------				
14		2,6-Dinitrotoluene		----------NA----------				
15		2,4-Dinitrotoluene		----------NA----------				
16		o-Nitrotoluene		----------NA----------				
17		p-Nitrotoluene		----------NA----------				
18		m-Nitrotoluene		----------NA----------				

***** Signal #2 *****

1		HMX		----------NA----------				
2		TNX	500.000	509.991	-2.0	0	0.00	4.15- 5.15
3		DNX	500.000	523.209	-4.6	0	0.00	4.58- 5.58
4		MNX	500.000	527.451	-5.5	0	-0.01	5.34- 6.34
5		RDX		----------NA----------				
6		1,3,5-Trinitrobenzene		----------NA----------				
7		1,3-Dinitrobenzene		----------NA----------				
8		Tetryl		----------NA----------				
9		Nitrobenzene		----------NA----------				
10	S	3,4-Dinitrotoluene		----------NA----------				
11		2,4,6-Trinitrotoluene		----------NA----------				
12		4-Amino-2,6-Dinitrotoluen		----------NA----------				
13		2-Amino-4,6-Dinitrotoluen		----------NA----------				
14		2,6-Dinitrotoluene		----------NA----------				
15		2,4-Dinitrotoluene		----------NA----------				
16		o-Nitrotoluene		----------NA----------				
17		p-Nitrotoluene		----------NA----------				
18		m-Nitrotoluene		----------NA----------				

Initial Calibration Verification

Job Number: T16432
Account: ALGC Accutest Laboratories Gulf Coast, Inc.
Project: ITTXHO: Longhorn Army Ammunition Plant

Sample: GGG826-ICV825
Lab FileID: GG018300.D

```
(#) = Out of Range                SPCC's out = 0  CCC's out = 0
 GG018286.D 8330_EX.M        Fri Oct 20 16:54:56 2006
```

Initial Calibration Summary

Job Number: T16432
Account: ALGC Accutest Laboratories Gulf Coast, Inc.
Project: ITTXHO: Longhorn Army Ammunition Plant

Sample: GGG827-ICC827
Lab FileID: GG018316.D

Response Factor Report G1315B

Method : C:\HPCHEM\1\METHODS\8330_RP.M (Chemstation Integrator)
Title : Explosives by 8330
Last Update : Fri Oct 20 14:03:32 2006
Response via : Initial Calibration

Calibration Files
20 =GG018313.D 100 =GG018314.D 250 =GG018315.D 500 =GG018316.D
750 =GG018317.D 1000=GG018318.D 2000=GG018319.D

	Compound	20	100	250	500	750	1000	2000	Avg	%RSD
1)	TNX	6.022	6.861	7.022	6.686	6.915	6.925	7.121	6.793 E3	5.38
2)	HMX	2.976	2.856	2.642	2.478	2.489	2.481	2.586	2.644 E3	7.51
3)	DNX	5.820	5.904	5.816	5.437	5.628	5.545	5.823	5.710 E3	3.05
4)	MNX	4.717	4.981	5.224	5.007	5.063	4.976	5.294	5.037 E3	3.73
5)	1,3,5-Trinitroben	7.302	7.899	8.123	7.797	7.946	7.847	8.236	7.879 E3	3.78
6)	RDX	3.327	3.935	3.881	3.729	3.710	3.686	3.841	3.730 E3	5.39
7)	1,3-Dinitrobenzen	1.122	1.117	1.144	1.096	1.117	1.113	1.146	1.122 E4	1.56
8)	Nitrobenzene	6.720	7.206	7.440	7.104	7.286	7.290	7.513	7.223 E3	3.61
9)	2,4,6-Trinitrotol	7.126	7.674	7.812	7.517	7.651	7.587	7.941	7.615 E3	3.39
10)	Tetryl	5.119	5.755	6.124	6.105	6.006	5.862	6.470	5.920 E3	7.10
11)S	3,4-Dinitrotoluen	4.973	4.941	4.969	4.829	4.912	4.883	5.055	4.938 E3	1.46
12)	2,6-Dinitrotoluen	6.023	5.649	5.657	5.415	5.544	5.538	5.672	5.643 E3	3.38
13)	2,4-Dinitrotoluen	1.200	1.036	1.034	0.995	1.012	1.007	1.038	1.046 E4	6.68
14)	o-Nitrotoluene	5.021	4.648	4.729	4.526	4.679	4.666	4.837	4.729 E3	3.36
15)	p-Nitrotoluene	4.036	3.890	3.967	3.762	3.919	3.914	4.051	3.934 E3	2.49
16)	4-Amino-2,6-Dinit	5.109	5.368	5.518	5.300	5.406	5.380	5.621	5.386 E3	3.01
17)	m-Nitrotoluene	4.743	4.946	5.173	4.937	5.131	5.119	5.324	5.053 E3	3.79
18)	2-Amino-4,6-Dinit	7.249	7.503	7.692	7.547	7.548	7.525	7.845	7.558 E3	2.42

Signal #2

1)	TNX	0.828	1.032	1.066	1.024	1.037	1.032	1.073	1.013 E4	8.25
2)	HMX	8.967	9.716	9.270	8.345	8.192	8.095	8.326	8.702 E3	7.15
3)	DNX	0.786	1.108	1.019	0.937	0.919	0.897	0.935	0.943 E4	10.65
4)	MNX	7.457	8.346	8.580	8.147	8.087	7.895	8.399	8.130 E3	4.58
5)	1,3,5-Trinitroben	1.449	1.617	1.667	1.594	1.616	1.593	1.673	1.601 E4	4.64
6)	RDX	6.077	6.386	6.563	6.283	6.229	6.181	6.460	6.311 E3	2.67
7)	1,3-Dinitrobenzen	1.294	1.326	1.427	1.333	1.365	1.364	1.397	1.358 E4	3.31
8)	Nitrobenzene	3.190	3.096	3.823	3.281	3.391	3.385	3.476	3.378 E3	6.96
9)	2,4,6-Trinitrotol	1.098	1.109	1.152	1.104	1.122	1.113	1.169	1.124 E4	2.37
10)	Tetryl	0.953	1.028	1.114	1.113	1.085	1.059	1.177	1.075 E4	6.67
11)S	3,4-Dinitrotoluen	6.832	6.775	6.813	6.648	6.692	6.629	6.906	6.756 E3	1.53
12)	2,6-Dinitrotoluen	8.344	7.760	7.758	7.423	7.578	7.556	7.765	7.740 E3	3.83
13)	2,4-Dinitrotoluen	1.104	0.941	0.942	0.911	0.927	0.919	0.952	0.957 E4	6.94
14)	o-Nitrotoluene	3.189	2.755	2.867	2.791	2.895	2.880	3.025	2.915 E3	5.09
15)	p-Nitrotoluene	2.114	1.879	1.907	1.825	1.916	1.926	1.998	1.938 E3	4.82
16)	4-Amino-2,6-Dinit	1.431	1.486	1.522	1.459	1.490	1.484	1.552	1.489 E4	2.66
17)	m-Nitrotoluene	2.353	2.391	2.516	2.444	2.546	2.567	2.681	2.500 E3	4.52
18)	2-Amino-4,6-Dinit	1.233	1.258	1.276	1.258	1.253	1.255	1.311	1.263 E4	1.92

(#) = Out of Range

8330_RP.M Mon Oct 23 13:34:29 2006

Initial Calibration Verification

Job Number: T16432
Account: ALGC Accutest Laboratories Gulf Coast, Inc.
Project: ITTXHO: Longhorn Army Ammunition Plant

Sample: GGG827-ICV827
Lab FileID: GG018320.D

Evaluate Continuing Calibration Report

Signal #1 : G:\HPCHEM\1\DATA\1020RP\GG018320.D\dad1B.ch Vial: 10
Signal #2 : G:\HPCHEM\1\DATA\1020RP\GG018320.D\dad1A.ch
Acq On : 20-Oct-2006, 14:03:23 Operator: MIKEE
Sample : ICV827-250 Inst : G1315B
Misc : OP18202,ggg827,1000,,,10,,water Multiplr: 1.00
IntFile Signal #1: EVENTS.E IntFile Signal #2: events2.e

Method : C:\HPCHEM\1\METHODS\8330_RP.M (Chemstation Integrator)
Title : Explosives by 8330
Last Update : Fri Oct 20 14:03:32 2006
Response via : Multiple Level Calibration

Min. RRF : 0.000 Min. Rel. Area : 50% Max. R.T. Dev 0.50min
Max. RRF Dev : 15% Max. Rel. Area : 200%

	Compound	Amount	Calc.	%Drift	Area%	Dev(min)	RT Window
1	TNX	250.000	258.384	-3.4	100	0.00	4.21- 5.21
2	HMX	250.000	260.989	-4.4	104	0.00	4.69- 5.69
3	DNX	250.000	254.013	-1.6	100	0.00	4.83- 5.83
4	MNX	250.000	255.142	-2.1	98	0.00	5.66- 6.66
5	1,3,5-Trinitrobenzene	250.000	264.789	-5.9	103	0.00	6.12- 7.12
6	RDX	250.000	252.023	-0.8	97	0.00	6.51- 7.51
7	1,3-Dinitrobenzene	250.000	257.308	-2.9	101	0.00	7.70- 8.70
8	Nitrobenzene	250.000	266.121	-6.4	103	0.00	8.24- 9.24
9	2,4,6-Trinitrotoluene	250.000	268.228	-7.3	105	0.00	8.71- 9.71
10	Tetryl	250.000	205.504	17.8#	79	0.00	9.41-10.41
11 S	3,4-Dinitrotoluene		----------NA----------				
12	2,6-Dinitrotoluene	250.000	254.196	-1.7	101	0.00	10.49-11.49
13	2,4-Dinitrotoluene	250.000	244.946	2.0	99	0.00	10.95-11.95
14	o-Nitrotoluene	250.000	248.278	0.7	99	0.00	11.79-12.79
15	p-Nitrotoluene	250.000	258.872	-3.5	103	0.00	12.45-13.45
16	4-Amino-2,6-Dinitrotol	250.000	255.921	-2.4	100	0.00	12.83-13.83
17	m-Nitrotoluene	250.000	252.478	-1.0	99	0.00	13.29-14.29
18	2-Amino-4,6-Dinitrotol	250.000	236.039	5.6	93	0.00	14.31-15.31

***** Signal #2 *****

1	TNX	250.000	262.147	-4.9	100	0.00	4.22- 5.22
2	HMX	250.000	276.033	-10.4	104	0.00	4.69- 5.69
3	DNX	250.000	263.149	-5.3	97	0.00	4.83- 5.83
4	MNX	250.000	255.967	-2.4	97	0.00	5.66- 6.66
5	1,3,5-Trinitrobenzene	250.000	265.613	-6.2	102	0.00	6.12- 7.12
6	RDX	250.000	248.723	0.5	96	0.00	6.51- 7.51
7	1,3-Dinitrobenzene	250.000	276.649	-10.7	105	0.00	7.70- 8.70
8	Nitrobenzene	250.000	301.148	-20.5#	106	0.00	8.24- 9.24
9	2,4,6-Trinitrotoluene	250.000	269.121	-7.6	105	0.00	8.71- 9.71
10	Tetryl	250.000	203.173	18.7#	78	0.00	9.41-10.41
11 S	3,4-Dinitrotoluene		----------NA----------				
12	2,6-Dinitrotoluene	250.000	252.008	-0.8	101	0.00	10.49-11.49
13	2,4-Dinitrotoluene	250.000	241.694	3.3	98	0.00	10.95-11.95
14	o-Nitrotoluene	250.000	241.466	3.4	98	0.00	11.79-12.79
15	p-Nitrotoluene	250.000	250.555	-0.2	102	0.00	12.46-13.46
16	4-Amino-2,6-Dinitrotol	250.000	255.253	-2.1	100	0.00	12.83-13.83
17	m-Nitrotoluene	250.000	250.572	-0.2	100	0.00	13.28-14.28
18	2-Amino-4,6-Dinitrotol	250.000	234.881	6.0	93	0.00	14.31-15.31

Initial Calibration Verification

Job Number: T16432
Account: ALGC Accutest Laboratories Gulf Coast, Inc.
Project: ITTXHO: Longhorn Army Ammunition Plant

Sample: GGG827-ICV827
Lab FileID: GG018320.D

```
(#) = Out of Range                SPCC's out = 0  CCC's out = 0
 GG018315.D 8330_RP.M         Mon Oct 23 13:35:35 2006
```

Initial Calibration Verification

Job Number: T16432
Account: ALGC Accutest Laboratories Gulf Coast, Inc.
Project: ITTXHO: Longhorn Army Ammunition Plant

Sample: GGG827-ICV827
Lab FileID: GG018321.D

Evaluate Continuing Calibration Report

Signal #1 : G:\HPCHEM\1\DATA\1020RP\GG018321.D\dad1B.ch Vial: 100
Signal #2 : G:\HPCHEM\1\DATA\1020RP\GG018321.D\dad1A.ch
Acq On : 20-Oct-2006, 15:10:45 Operator: MIKEE
Sample : ICV827-500 Inst : G1315B
Misc : OP18202,ggg827,1000,,,10,,water Multiplr: 1.00
IntFile Signal #1: EVENTS.E IntFile Signal #2: events2.e

Method : C:\HPCHEM\1\METHODS\8330_RP.M (Chemstation Integrator)
Title : Explosives by 8330
Last Update : Fri Oct 20 14:03:32 2006
Response via : Multiple Level Calibration

Min. RRF : 0.000 Min. Rel. Area : 50% Max. R.T. Dev 0.50min
Max. RRF Dev : 15% Max. Rel. Area : 200%

	Compound	Amount	Calc.	%Drift	Area%	Dev(min)	RT Window
1	TNX	500.000	565.302	-13.1	115	0.00	4.21- 5.21
2	HMX	500.000	543.872	-8.8	116	0.00	4.69- 5.69
3	DNX	500.000	551.643	-10.3	116	-0.01	4.83- 5.83
4	MNX	500.000	572.618	-14.5	115	0.00	5.66- 6.66
5	1,3,5-Trinitrobenzene	500.000	538.163	-7.6	109	0.00	6.12- 7.12
6	RDX	500.000	498.936	0.2	100	0.00	6.51- 7.51
7	1,3-Dinitrobenzene	500.000	510.060	-2.0	104	0.00	7.70- 8.70
8	Nitrobenzene	500.000	533.993	-6.8	109	0.00	8.24- 9.24
9	2,4,6-Trinitrotoluene	500.000	549.178	-9.8	111	0.00	8.71- 9.71
10	Tetryl	500.000	475.586	4.9	92	0.00	9.41-10.41
11 S	3,4-Dinitrotoluene	----------NA----------					
12	2,6-Dinitrotoluene	500.000	498.834	0.2	104	0.00	10.49-11.49
13	2,4-Dinitrotoluene	500.000	493.011	1.4	104	0.00	10.95-11.95
14	o-Nitrotoluene	500.000	510.083	-2.0	107	0.00	11.79-12.79
15	p-Nitrotoluene	500.000	530.499	-6.1	111	0.00	12.45-13.45
16	4-Amino-2,6-Dinitrotol	500.000	518.182	-3.6	105	-0.01	12.83-13.83
17	m-Nitrotoluene	500.000	521.475	-4.3	107	0.00	13.29-14.29
18	2-Amino-4,6-Dinitrotol	500.000	479.808	4.0	96	-0.01	14.31-15.31

***** Signal #2 *****

1	TNX	500.000	637.256	-27.5#	126	-0.01	4.22- 5.22
2	HMX	500.000	581.600	-16.3#	121	0.00	4.69- 5.69
3	DNX	500.000	552.258	-10.5	111	-0.01	4.83- 5.83
4	MNX	500.000	573.858	-14.8	115	0.00	5.66- 6.66
5	1,3,5-Trinitrobenzene	500.000	539.558	-7.9	108	0.00	6.12- 7.12
6	RDX	500.000	495.496	0.9	100	0.00	6.51- 7.51
7	1,3-Dinitrobenzene	500.000	512.019	-2.4	104	0.00	7.70- 8.70
8	Nitrobenzene	500.000	545.924	-9.2	112	0.00	8.24- 9.24
9	2,4,6-Trinitrotoluene	500.000	549.800	-10.0	112	0.00	8.71- 9.71
10	Tetryl	500.000	472.605	5.5	91	0.00	9.41-10.41
11 S	3,4-Dinitrotoluene	----------NA----------					
12	2,6-Dinitrotoluene	500.000	496.402	0.7	104	0.00	10.49-11.49
13	2,4-Dinitrotoluene	500.000	494.458	1.1	104	0.00	10.95-11.95
14	o-Nitrotoluene	500.000	518.803	-3.8	108	0.00	11.79-12.79
15	p-Nitrotoluene	500.000	534.408	-6.9	114	0.00	12.46-13.46
16	4-Amino-2,6-Dinitrotol	500.000	519.292	-3.9	106	-0.01	12.83-13.83
17	m-Nitrotoluene	500.000	532.272	-6.5	109	0.00	13.28-14.28
18	2-Amino-4,6-Dinitrotol	500.000	479.037	4.2	96	-0.01	14.31-15.31

Initial Calibration Verification

Job Number: T16432
Account: ALGC Accutest Laboratories Gulf Coast, Inc.
Project: ITTXHO: Longhorn Army Ammunition Plant

Sample: GGG827-ICV827
Lab FileID: GG018321.D

```
(#) = Out of Range                SPCC's out = 0  CCC's out = 0
 GG018316.D 8330_RP.M         Mon Oct 23 13:35:18 2006
```

Continuing Calibration Summary

Job Number: T16432
Account: ALGC Accutest Laboratories Gulf Coast, Inc.
Project: ITTXHO: Longhorn Army Ammunition Plant

Sample: GGG906-CC825
Lab FileID: GG020201.D

Evaluate Continuing Calibration Report

Signal #1 : G:\DATA\0302ODS\GG020201.D\dad1B.ch Vial: 2
Signal #2 : G:\DATA\0302ODS\GG020201.D\dad1A.ch
Acq On : 02-Mar-2007, 16:17:48 Operator: MIKEE
Sample : CC825-500 Inst : G1315B
Misc : OP19677,ggg906,1000,,,10,,water Multiplr: 1.00
IntFile Signal #1: EVENTS.E IntFile Signal #2: EVENTS2.E

Method : C:\HPCHEM\1\METHODS\8330_EX.M (Chemstation Integrator)
Title : Explosives by 8330
Last Update : Thu Mar 01 11:02:09 2007
Response via : Multiple Level Calibration

Min. RRF : 0.000 Min. Rel. Area : 50% Max. R.T. Dev 0.50min
Max. RRF Dev : 15% Max. Rel. Area : 200%

		Compound	Amount	Calc.	%Drift	Area%	Dev(min)	RT Window
1		HMX	500.000	490.559	1.9	101	0.00	3.86- 4.86
2		TNX	500.000	512.293	-2.5	103	-0.01	4.20- 5.20
3		DNX	500.000	511.151	-2.2	104	0.00	4.60- 5.60
4		MNX	500.000	508.598	-1.7	104	0.01	5.37- 6.37
5		RDX	500.000	518.998	-3.8	104	0.00	6.15- 7.15
6		1,3,5-Trinitrobenzene	500.000	498.455	0.3	103	0.02	8.43- 9.43
7		1,3-Dinitrobenzene	500.000	498.190	0.4	102	0.02	10.43-11.43
8		Tetryl	500.000	498.475	0.3	102	0.03	11.21-12.21
9		Nitrobenzene	500.000	503.313	-0.7	104	0.03	11.93-12.93
10	S	3,4-Dinitrotoluene	500.000	496.619	0.7	102	0.04	12.95-13.95
11		2,4,6-Trinitrotoluene	500.000	503.597	-0.7	103	0.04	13.60-14.60
12		4-Amino-2,6-Dinitrotol	500.000	496.441	0.7	102	0.05	14.37-15.37
13		2-Amino-4,6-Dinitrotol	500.000	500.727	-0.1	103	0.05	15.14-16.14
14		2,6-Dinitrotoluene	500.000	510.258	-2.1	107	0.05	16.10-17.10
15		2,4-Dinitrotoluene	500.000	480.817	3.8	101	0.05	16.60-17.60
16		o-Nitrotoluene	500.000	497.302	0.5	106	0.06	19.73-20.73
17		p-Nitrotoluene	500.000	500.449	-0.1	106	0.06	21.06-22.06
18		m-Nitrotoluene	500.000	506.087	-1.2	106	0.07	22.76-23.76

***** Signal #2 *****

1		HMX	500.000	500.092	-0.0	102	0.00	3.86- 4.86
2		TNX	500.000	509.529	-1.9	103	0.00	4.18- 5.18
3		DNX	500.000	520.538	-4.1	104	0.00	4.60- 5.60
4		MNX	500.000	521.239	-4.2	106	0.01	5.37- 6.37
5		RDX	500.000	566.452	-13.3	111	0.00	6.15- 7.15
6		1,3,5-Trinitrobenzene	500.000	505.722	-1.1	103	0.02	8.43- 9.43
7		1,3-Dinitrobenzene	500.000	502.475	-0.5	102	0.02	10.43-11.43
8		Tetryl	500.000	507.037	-1.4	102	0.03	11.21-12.21
9		Nitrobenzene	500.000	499.803	0.0	103	0.03	11.93-12.93
10	S	3,4-Dinitrotoluene	500.000	495.718	0.9	101	0.04	12.95-13.95
11		2,4,6-Trinitrotoluene	500.000	500.992	-0.2	103	0.04	13.60-14.60
12		4-Amino-2,6-Dinitrotol	500.000	497.188	0.6	102	0.05	14.37-15.37
13		2-Amino-4,6-Dinitrotol	500.000	499.032	0.2	103	0.05	15.14-16.14
14		2,6-Dinitrotoluene	500.000	496.978	0.6	105	0.05	16.10-17.10
15		2,4-Dinitrotoluene	500.000	472.110	5.6	100	0.05	16.60-17.60
16		o-Nitrotoluene	500.000	489.795	2.0	104	0.05	19.73-20.73
17		p-Nitrotoluene	500.000	496.698	0.7	105	0.06	21.06-22.06
18		m-Nitrotoluene	500.000	503.963	-0.8	105	0.07	22.77-23.77

Continuing Calibration Summary

Job Number: T16432
Account: ALGC Accutest Laboratories Gulf Coast, Inc.
Project: ITTXHO: Longhorn Army Ammunition Plant

Sample: GGG906-CC825
Lab FileID: GG020201.D

```
(#) = Out of Range                SPCC's out = 0  CCC's out = 0
 GG018282.D 8330_EX.M        Mon Mar 05 11:42:29 2007
```

Continuing Calibration Summary

Job Number: T16432
Account: ALGC Accutest Laboratories Gulf Coast, Inc.
Project: ITTXHO: Longhorn Army Ammunition Plant

Sample: GGG906-CC825
Lab FileID: GG020212.D

Evaluate Continuing Calibration Report

Signal #1 : G:\DATA\0302ODS\GG020212.D\dad1B.ch Vial: 3
Signal #2 : G:\DATA\0302ODS\GG020212.D\dad1A.ch
Acq On : 02-Mar-2007, 21:07:57 Operator: MIKEE
Sample : CC825-1000 Inst : G1315B
Misc : OP19677,ggg906,1000,,,10,,water Multiplr: 1.00
IntFile Signal #1: EVENTS.E IntFile Signal #2: EVENTS2.E

Method : C:\HPCHEM\1\METHODS\8330_EX.M (Chemstation Integrator)
Title : Explosives by 8330
Last Update : Thu Mar 01 11:02:09 2007
Response via : Multiple Level Calibration

Min. RRF : 0.000 Min. Rel. Area : 50% Max. R.T. Dev 0.50min
Max. RRF Dev : 15% Max. Rel. Area : 200%

		Compound	Amount	Calc.	%Drift	Area%	Dev(min)	RT Window
1		HMX	1000.000	969.184	3.1	98	0.00	3.86- 4.86
2		TNX	1000.000	1012.847	-1.3	100	-0.02	4.20- 5.20
3		DNX	1000.000	1011.041	-1.1	101	0.00	4.60- 5.60
4		MNX	1000.000	1001.768	-0.2	101	0.00	5.37- 6.37
5		RDX	1000.000	1012.522	-1.3	100	-0.01	6.15- 7.15
6		1,3,5-Trinitrobenzene	1000.000	982.133	1.8	99	0.00	8.43- 9.43
7		1,3-Dinitrobenzene	1000.000	981.873	1.8	99	0.00	10.43-11.43
8		Tetryl	1000.000	979.286	2.1	98	0.00	11.21-12.21
9		Nitrobenzene	1000.000	995.199	0.5	100	0.00	11.93-12.93
10	S	3,4-Dinitrotoluene	1000.000	971.158	2.9	98	0.00	12.95-13.95
11		2,4,6-Trinitrotoluene	1000.000	991.752	0.8	99	0.00	13.60-14.60
12		4-Amino-2,6-Dinitrotol	1000.000	975.490	2.5	98	0.00	14.37-15.37
13		2-Amino-4,6-Dinitrotol	1000.000	987.191	1.3	99	0.00	15.14-16.14
14		2,6-Dinitrotoluene	1000.000	995.657	0.4	102	0.00	16.10-17.10
15		2,4-Dinitrotoluene	1000.000	946.550	5.3	98	0.00	16.60-17.60
16		o-Nitrotoluene	1000.000	961.637	3.8	99	-0.01	19.73-20.73
17		p-Nitrotoluene	1000.000	975.200	2.5	99	-0.01	21.06-22.06
18		m-Nitrotoluene	1000.000	997.451	0.3	100	0.00	22.76-23.76

***** Signal #2 *****

1		HMX	1000.000	984.283	1.6	99	0.00	3.86- 4.86
2		TNX	1000.000	1002.891	-0.3	100	0.00	4.18- 5.18
3		DNX	1000.000	1012.877	-1.3	101	0.00	4.60- 5.60
4		MNX	1000.000	1004.320	-0.4	101	0.00	5.37- 6.37
5		RDX	1000.000	1044.793	-4.5	101	-0.02	6.15- 7.15
6		1,3,5-Trinitrobenzene	1000.000	984.579	1.5	99	0.00	8.43- 9.43
7		1,3-Dinitrobenzene	1000.000	989.010	1.1	99	0.00	10.43-11.43
8		Tetryl	1000.000	997.573	0.2	99	0.00	11.21-12.21
9		Nitrobenzene	1000.000	992.439	0.8	102	0.00	11.93-12.93
10	S	3,4-Dinitrotoluene	1000.000	962.803	3.7	98	0.00	12.95-13.95
11		2,4,6-Trinitrotoluene	1000.000	983.229	1.7	99	0.00	13.60-14.60
12		4-Amino-2,6-Dinitrotol	1000.000	974.885	2.5	98	0.00	14.37-15.37
13		2-Amino-4,6-Dinitrotol	1000.000	978.179	2.2	99	0.00	15.14-16.14
14		2,6-Dinitrotoluene	1000.000	974.861	2.5	101	0.00	16.10-17.10
15		2,4-Dinitrotoluene	1000.000	935.023	6.5	97	0.00	16.60-17.60
16		o-Nitrotoluene	1000.000	961.820	3.8	98	-0.01	19.73-20.73
17		p-Nitrotoluene	1000.000	982.213	1.8	99	0.00	21.06-22.06
18		m-Nitrotoluene	1000.000	1002.440	-0.2	99	-0.01	22.77-23.77

Continuing Calibration Summary

Job Number: T16432
Account: ALGC Accutest Laboratories Gulf Coast, Inc.
Project: ITTXHO: Longhorn Army Ammunition Plant

Sample: GGG906-CC825
Lab FileID: GG020212.D

```
(#) = Out of Range                SPCC's out = 0  CCC's out = 0
 GG018284.D 8330_EX.M        Mon Mar 05 11:42:13 2007
```

Continuing Calibration Summary

Job Number: T16432
Account: ALGC Accutest Laboratories Gulf Coast, Inc.
Project: ITTXHO: Longhorn Army Ammunition Plant

Sample: GGG907-CC827
Lab FileID: GG020231.D

Evaluate Continuing Calibration Report

Signal #1 : G:\DATA\0305RP\GG020231.D\dad1B.ch Vial: 2
Signal #2 : G:\DATA\0305RP\GG020231.D\dad1A.ch
Acq On : 05-Mar-2007, 13:23:34 Operator: MIKEE
Sample : CC827-500 Inst : G1315B
Misc : OP19677,ggg907,1000,,,10,,water Multiplr: 1.00
IntFile Signal #1: EVENTS.E IntFile Signal #2: events2.e

Method : C:\HPCHEM\1\METHODS\8330_RP.M (Chemstation Integrator)
Title : Explosives by 8330
Last Update : Fri Jan 26 08:35:20 2007
Response via : Multiple Level Calibration

Min. RRF : 0.000 Min. Rel. Area : 50% Max. R.T. Dev 0.50min
Max. RRF Dev : 15% Max. Rel. Area : 200%

	Compound	Amount	Calc.	%Drift	Area%	Dev(min)	RT Window
1	TNX	500.000	551.245	-10.2	112	0.02	4.24- 5.24
2	HMX	500.000	527.482	-5.5	113	0.00	4.75- 5.75
3	DNX	500.000	526.884	-5.4	111	0.01	4.87- 5.87
4	MNX	500.000	525.950	-5.2	106	0.00	5.72- 6.72
5	1,3,5-Trinitrobenzene	500.000	507.541	-1.5	103	0.00	6.17- 7.17
6	RDX	500.000	498.345	0.3	100	0.02	6.56- 7.56
7	1,3-Dinitrobenzene	500.000	495.147	1.0	101	0.00	7.78- 8.78
8	Nitrobenzene	500.000	509.807	-2.0	104	0.00	8.29- 9.29
9	2,4,6-Trinitrotoluene	500.000	506.824	-1.4	103	-0.01	8.80- 9.80
10	Tetryl	500.000	535.862	-7.2	104	0.00	9.52-10.52
11 S	3,4-Dinitrotoluene	500.000	492.695	1.5	101	0.00	10.21-11.21
12	2,6-Dinitrotoluene	500.000	489.618	2.1	102	-0.02	10.59-11.59
13	2,4-Dinitrotoluene	500.000	483.678	3.3	102	-0.02	11.06-12.06
14	o-Nitrotoluene	500.000	502.970	-0.6	105	-0.01	11.86-12.86
15	p-Nitrotoluene	500.000	503.359	-0.7	105	-0.01	12.53-13.53
16	4-Amino-2,6-Dinitrotol	500.000	502.155	-0.4	102	-0.03	12.95-13.95
17	m-Nitrotoluene	500.000	523.547	-4.7	107	-0.02	13.38-14.38
18	2-Amino-4,6-Dinitrotol	500.000	503.929	-0.8	101	-0.03	14.45-15.45

***** Signal #2 *****

1	TNX	500.000	539.038	-7.8	107	0.02	4.24- 5.24
2	HMX	500.000	501.388	-0.3	105	0.00	4.75- 5.75
3	DNX	500.000	520.169	-4.0	105	0.01	4.87- 5.87
4	MNX	500.000	520.287	-4.1	104	0.00	5.72- 6.72
5	1,3,5-Trinitrobenzene	500.000	508.259	-1.7	102	0.00	6.17- 7.17
6	RDX	500.000	496.557	0.7	100	0.02	6.56- 7.56
7	1,3-Dinitrobenzene	500.000	499.335	0.1	102	0.00	7.78- 8.78
8	Nitrobenzene	500.000	521.041	-4.2	107	0.00	8.29- 9.29
9	2,4,6-Trinitrotoluene	500.000	510.092	-2.0	104	-0.01	8.80- 9.80
10	Tetryl	500.000	533.664	-6.7	103	0.00	9.52-10.52
11 S	3,4-Dinitrotoluene	500.000	488.383	2.3	99	0.00	10.21-11.21
12	2,6-Dinitrotoluene	500.000	487.517	2.5	102	-0.02	10.59-11.59
13	2,4-Dinitrotoluene	500.000	483.800	3.2	102	-0.02	11.06-12.06
14	o-Nitrotoluene	500.000	519.246	-3.8	108	-0.01	11.86-12.86
15	p-Nitrotoluene	500.000	515.868	-3.2	110	0.00	12.54-13.54
16	4-Amino-2,6-Dinitrotol	500.000	499.988	0.0	102	-0.03	12.95-13.95
17	m-Nitrotoluene	500.000	538.963	-7.8	110	-0.02	13.37-14.37
18	2-Amino-4,6-Dinitrotol	500.000	499.905	0.0	100	-0.03	14.45-15.45

Continuing Calibration Summary

Job Number: T16432
Account: ALGC Accutest Laboratories Gulf Coast, Inc.
Project: ITTXHO: Longhorn Army Ammunition Plant

Sample: GGG907-CC827
Lab FileID: GG020231.D

```
(#) = Out of Range                SPCC's out = 0  CCC's out = 0
 GG018316.D 8330_RP.M        Tue Mar 06 10:57:51 2007
```

Continuing Calibration Summary

Job Number: T16432
Account: ALGC Accutest Laboratories Gulf Coast, Inc.
Project: ITTXHO: Longhorn Army Ammunition Plant

Sample: GGG907-ECC827
Lab FileID: GG020238.D

Evaluate Continuing Calibration Report

Signal #1 : G:\DATA\0305RP\GG020238.D\dad1B.ch Vial: 3
Signal #2 : G:\DATA\0305RP\GG020238.D\dad1A.ch
Acq On : 05-Mar-2007, 15:40:35 Operator: MIKEE
Sample : ECC827-1000 Inst : G1315B
Misc : OP19677,ggg907,1000,,,10,,water Multiplr: 1.00
IntFile Signal #1: EVENTS.E IntFile Signal #2: events2.e

Method : C:\HPCHEM\1\METHODS\8330_RP.M (Chemstation Integrator)
Title : Explosives by 8330
Last Update : Fri Jan 26 08:35:20 2007
Response via : Multiple Level Calibration

Min. RRF : 0.000 Min. Rel. Area : 50% Max. R.T. Dev 0.50min
Max. RRF Dev : 15% Max. Rel. Area : 200%

	Compound	Amount	Calc.	%Drift	Area%	Dev(min)	RT Window
1	TNX	1000.000	1064.078	-6.4	104	0.02	4.24- 5.24
2	HMX	1000.000	1064.872	-6.5	113	0.00	4.75- 5.75
3	DNX	1000.000	1029.858	-3.0	106	0.00	4.87- 5.87
4	MNX	1000.000	1052.110	-5.2	107	0.00	5.72- 6.72
5	1,3,5-Trinitrobenzene	1000.000	1020.840	-2.1	102	0.00	6.17- 7.17
6	RDX	1000.000	1020.894	-2.1	103	0.02	6.56- 7.56
7	1,3-Dinitrobenzene	1000.000	1005.302	-0.5	101	0.00	7.78- 8.78
8	Nitrobenzene	1000.000	1031.078	-3.1	102	0.00	8.29- 9.29
9	2,4,6-Trinitrotoluene	1000.000	1033.117	-3.3	104	-0.01	8.80- 9.80
10	Tetryl	1000.000	1104.790	-10.5	112	0.00	9.52-10.52
11 S	3,4-Dinitrotoluene	1000.000	1016.218	-1.6	103	0.00	10.21-11.21
12	2,6-Dinitrotoluene	1000.000	998.411	0.2	102	-0.02	10.59-11.59
13	2,4-Dinitrotoluene	1000.000	987.663	1.2	103	-0.02	11.06-12.06
14	o-Nitrotoluene	1000.000	1040.619	-4.1	105	-0.01	11.86-12.86
15	p-Nitrotoluene	1000.000	1034.751	-3.5	104	-0.01	12.53-13.53
16	4-Amino-2,6-Dinitrotol	1000.000	1018.262	-1.8	102	-0.02	12.95-13.95
17	m-Nitrotoluene	1000.000	1063.626	-6.4	105	-0.02	13.38-14.38
18	2-Amino-4,6-Dinitrotol	1000.000	1018.025	-1.8	102	-0.02	14.45-15.45

***** Signal #2 *****

1	TNX	1000.000	1065.753	-6.6	105	0.02	4.24- 5.24
2	HMX	1000.000	959.987	4.0	103	0.00	4.75- 5.75
3	DNX	1000.000	1023.085	-2.3	108	0.01	4.87- 5.87
4	MNX	1000.000	1036.881	-3.7	107	0.00	5.72- 6.72
5	1,3,5-Trinitrobenzene	1000.000	1018.352	-1.8	102	0.00	6.17- 7.17
6	RDX	1000.000	995.036	0.5	102	0.02	6.56- 7.56
7	1,3-Dinitrobenzene	1000.000	1003.575	-0.4	100	0.00	7.78- 8.78
8	Nitrobenzene	1000.000	1035.575	-3.6	103	0.00	8.29- 9.29
9	2,4,6-Trinitrotoluene	1000.000	1043.825	-4.4	105	-0.01	8.80- 9.80
10	Tetryl	1000.000	1097.433	-9.7	111	0.00	9.52-10.52
11 S	3,4-Dinitrotoluene	1000.000	1002.293	-0.2	102	0.00	10.21-11.21
12	2,6-Dinitrotoluene	1000.000	991.509	0.8	102	-0.02	10.59-11.59
13	2,4-Dinitrotoluene	1000.000	990.702	0.9	103	-0.02	11.06-12.06
14	o-Nitrotoluene	1000.000	1071.751	-7.2	108	-0.01	11.86-12.86
15	p-Nitrotoluene	1000.000	1073.626	-7.4	108	0.00	12.54-13.54
16	4-Amino-2,6-Dinitrotol	1000.000	1006.760	-0.7	101	-0.02	12.95-13.95
17	m-Nitrotoluene	1000.000	1093.803	-9.4	107	-0.02	13.37-14.37
18	2-Amino-4,6-Dinitrotol	1000.000	1006.963	-0.7	101	-0.02	14.45-15.45

Continuing Calibration Summary

Job Number: T16432
Account: ALGC Accutest Laboratories Gulf Coast, Inc.
Project: ITTXHO: Longhorn Army Ammunition Plant

Sample: GGG907-ECC827
Lab FileID: GG020238.D

```
(#) = Out of Range                SPCC's out = 0  CCC's out = 0
 GG018318.D 8330_RP.M        Tue Mar 06 10:58:20 2007
```

General Chemistry

QC Data Summaries

(Accutest Laboratories Southeast, Inc.)

Includes the following where applicable:

- Method Blank and Blank Spike Summaries
- Duplicate Summaries
- Matrix Spike Summaries
- Instrument Runlogs/QC

METHOD BLANK AND SPIKE RESULTS SUMMARY
GENERAL CHEMISTRY

Login Number: T16432
Account: ALGC - Accutest Laboratories Gulf Coast, Inc.
Project: ITTXHO: Longhorn Army Ammunition Plant

Analyte	Batch ID	RL	MB Result	Units	Spike Amount	BSP Result	BSP %Recov	QC Limits
Perchlorate	GP9043/GN24390	10	<10	ug/l	50	48.0	96.0	85-115%

Associated Samples:
Batch GP9043: T16432-1, T16432-2, T16432-3, T16432-4, T16432-5, T16432-6
(*) Outside of QC limits

DUPLICATE RESULTS SUMMARY
GENERAL CHEMISTRY

Login Number: T16432
Account: ALGC - Accutest Laboratories Gulf Coast, Inc.
Project: ITTXHO: Longhorn Army Ammunition Plant

Analyte	Batch ID	QC Sample	Units	Original Result	DUP Result	RPD	QC Limits
Perchlorate	GP9043/GN24390	T16411-10	ug/l	4.0 U	<10	0.0	0-15%

Associated Samples:
Batch GP9043: T16432-1, T16432-2, T16432-3, T16432-4, T16432-5, T16432-6
(*) Outside of QC limits

MATRIX SPIKE RESULTS SUMMARY
GENERAL CHEMISTRY

Login Number: T16432
Account: ALGC - Accutest Laboratories Gulf Coast, Inc.
Project: ITTXHO: Longhorn Army Ammunition Plant

Analyte	Batch ID	QC Sample	Units	Original Result	Spike Amount	MS Result	%Rec	QC Limits
Perchlorate	GP9043/GN24390	T16411-10	ug/l	4.0 U	50	48.4	96.8	80-120%

Associated Samples:
Batch GP9043: T16432-1, T16432-2, T16432-3, T16432-4, T16432-5, T16432-6
(*) Outside of QC limits
(N) Matrix Spike Rec. outside of QC limits

Accutest Laboratories Instrument Runlog
Inorganics Analyses

Login Number: T16432
Account: ALGC - Accutest Laboratories Gulf Coast, Inc.
Project: ITTXHO: Longhorn Army Ammunition Plant

File ID: 207030101.TXT Date Analyzed: 03/01/07 Methods: EPA 314
Analyst: MP Run ID: GN24390
Parameters: Perchlorate

Time	Sample Description	Dilution Factor	PS Recov	Comments
13:57	GN24390-CCV1	1		
14:11	GN24390-CCB1	1		
14:25	GP9043-MB1	1		
14:40	GP9043-B1	1		
14:54	GN24390-CRI1	1		
15:09	GN24390-IPC1	1		
15:23	ZZZZZZ	1		
15:37	ZZZZZZ	1		
15:52	ZZZZZZ	1		
16:06	T16411-1	1		(sample used for QC only; not part of login T16432)
16:21	ZZZZZZ	1		
16:35	ZZZZZZ	1		
16:50	GN24390-CCV2	1		
17:04	GN24390-CCB2	1		
17:18	ZZZZZZ	1		
17:33	ZZZZZZ	1		
17:47	ZZZZZZ	1		
18:02	ZZZZZZ	1		
18:16	ZZZZZZ	1		
18:30	ZZZZZZ	1		
18:45	T16411-10	1		(sample used for QC only; not part of login T16432)
18:59	T16432-1	1		
19:14	T16432-2	1		
19:28	T16432-3	1		
19:42	GN24390-CCV3	1		
19:57	GN24390-CCB3	1		
20:11	T16432-4	1		
20:26	T16432-5	1		
20:40	T16432-6	1		
20:54	GP9043-D1	1		
21:09	GP9043-S1	1		
21:23	GP9043-D2	1		
21:38	GP9043-S2	1		

Accutest Laboratories Instrument Runlog
Inorganics Analyses

Login Number: T16432
Account: ALGC - Accutest Laboratories Gulf Coast, Inc.
Project: ITTXHO: Longhorn Army Ammunition Plant

File ID: 207030101.TXT Date Analyzed: 03/01/07 Methods: EPA 314
Analyst: MP Run ID: GN24390
Parameters: Perchlorate

Time	Sample Description	Dilution Factor	PS Recov	Comments
21:52	GN24390-CCV4	1		
22:06	GN24390-CCB4	1		

Refer to raw data for calibration curve and standards.

Instrument QC Summary
Inorganics Analyses

Login Number: T16432
Account: ALGC - Accutest Laboratories Gulf Coast, Inc.
Project: ITTXHO: Longhorn Army Ammunition Plant

File ID: 207030101.TXT Date Analyzed: 03/01/07 Methods: EPA 314
Run ID: GN24390 Units: ug/l

Sample Number	Parameter	Result	RL	IDL/MDL	True Value	% Recov.	QC Limits
GN24390-CCV1	Perchlorate	48.0	10	4.0	50	96.0	85-115
GN24390-CCB1	Perchlorate	4.0 U	10	4.0			
GN24390-CRI1	Perchlorate	4.0 U	10	4.0	3	100.0	75-125
GN24390-IPC1	Perchlorate	22.0	10	4.0	25	88.0	80-120
GN24390-CCV2	Perchlorate	51.3	10	4.0	50	103.0	85-115
GN24390-CCB2	Perchlorate	4.0 U	10	4.0			
GN24390-CCV3	Perchlorate	53.1	10	4.0	50	106.0	85-115
GN24390-CCB3	Perchlorate	4.0 U	10	4.0			
GN24390-CCV4	Perchlorate	51.6	10	4.0	50	103.0	85-115
GN24390-CCB4	Perchlorate	4.0 U	10	4.0			

(!) Outside of QC limits

Gulf Coast ACCUTEST Laboratories

IT'S ALL IN THE CHEMISTRY

05/08/08

Technical Report for

Shaw E & I, Inc.

Longhorn Army Ammunition Plant

PROJECT #117591

Accutest Job Number: T16445

Sampling Dates: 02/22/07 - 02/23/07

Report to:

Shaw E & I, Inc.

jennifer.hoang@shawgrp.com

ATTN: Jennifer Hoang

Total number of pages in report: **189**

ACCREDITED IN ACCORDANCE WITH nelac

Test results contained within this data package meet the requirements of the National Environmental Laboratory Accreditation Conference and/or state specific certification programs as applicable.

Paul K Canevaro

Paul Canevaro
Laboratory Director

Client Service contact: Agnes Vicknair 713-271-4700

ACCUTEST LABORATORIES 50 YEARS 1956-2006

This report shall not be reproduced, except in its entirety, without the written approval of Accutest Laboratories. Test results relate only to samples analyzed.

Table of Contents

Section 1: Sample Summary 4
Section 2: Case Narrative/Conformance Summary 6
Section 3: Sample Results 10
3.1: T16445-1: 29WW38-FEB2007 11
3.2: T16445-2: 47WW30-FEB2007 16
3.3: T16445-3: LHSMW43-FEB2007 20
3.4: T16445-4: 50WW06-FEB2007 24
3.5: T16445-5: 50WW05-FEB2007 28
3.6: T16445-6: 50WW02-FEB2007 32
3.7: T16445-7: 17WW16-FEB2007 36
3.8: T16445-8: 17WW02-FEB2007 41
3.9: T16445-9: 17WW02-FEB2007 FD 46
3.10: T16445-10: 29WW35-FEB2007 50
3.11: T16445-11: 29WW35-FEB2007 FD 55
3.12: T16445-12: 29WW06-FEB2007 60
3.13: T16445-13: 17WW05-FEB2007 65
3.14: T16445-14: 7WW06-FEB2007 70
3.15: T16445-15: TRIP BLANK 75
3.16: T16445-18: 17WW130-FEB2007 77
Section 4: Misc. Forms 82
4.1: Chain of Custody 83
4.2: LRC Form 93
Section 5: GC/MS Volatiles - QC Data Summaries 97
5.1: Method Blank Summary 98
5.2: Blank Spike Summary 104
5.3: Matrix Spike/Matrix Spike Duplicate Summary 110
5.4: Instrument Performance Checks (BFB) 116
5.5: Internal Standard Area Summaries 120
5.6: Surrogate Recovery Summaries 123
5.7: Initial and Continuing Calibration Summaries 125
Section 6: General Chemistry - QC Data Summaries 134
6.1: Method Blank and Spike Results Summary 135
6.2: Duplicate Results Summary 136
6.3: Matrix Spike Results Summary 137
Section 7: Misc. Forms (Accutest Laboratories Southeast, Inc.) 138
7.1: Chain of Custody 139
Section 8: GC Volatiles - QC Data (Accutest Laboratories Southeast, Inc.) 142
8.1: Method Blank Summary 143
8.2: Blank Spike Summary 144
8.3: Matrix Spike Summary 145
8.4: Duplicate Summary 146
8.5: Initial and Continuing Calibration Summaries 147

Table of Contents

Section 9: GC Semi-volatiles - QC Data (Accutest Laboratories Southeast, Inc.) 152
9.1: Method Blank Summary 153
9.2: Blank Spike Summary 155
9.3: Matrix Spike/Matrix Spike Duplicate Summary 157
9.4: Surrogate Recovery Summaries 158
9.5: GC Surrogate Retention Time Summaries 159
9.6: Initial and Continuing Calibration Summaries 162
Section 10: General Chemistry - QC Data (Accutest Laboratories Southeast, Inc.) 182
10.1: Method Blank and Spike Results Summary 183
10.2: Duplicate Results Summary 184
10.3: Matrix Spike Results Summary 185
10.4: Inst QC GN24408: Perchlorate 186
10.5: Inst QC GN24437: Perchlorate 188

Accutest LabLink@31214 11:24 08-May-2008

Sample Summary

Shaw E & I, Inc.

Job No: T16445

Longhorn Army Ammunition Plant
Project No: PROJECT #117591

Sample Number	Collected Date	Time	By	Received	Matrix Code	Type	Client Sample ID
T16445-1	02/22/07	09:30	SMC	02/24/07	AQ	Ground Water	29WW38-FEB2007
T16445-2	02/22/07	09:41	SMC	02/24/07	AQ	Ground Water	47WW30-FEB2007
T16445-3	02/22/07	11:00	SMC	02/24/07	AQ	Ground Water	LHSMW43-FEB2007
T16445-4	02/22/07	15:36	SMC	02/24/07	AQ	Ground Water	50WW06-FEB2007
T16445-5	02/23/07	10:46	SMC	02/24/07	AQ	Ground Water	50WW05-FEB2007
T16445-5D	02/23/07	10:46	SMC	02/24/07	AQ	Water Dup/MSD	50WW05-FEB2007 MSD
T16445-5S	02/23/07	10:46	SMC	02/24/07	AQ	Water Matrix Spike	50WW05-FEB2007 MS
T16445-6	02/23/07	14:53	SMC	02/24/07	AQ	Ground Water	50WW02-FEB2007
T16445-7	02/22/07	10:30	SMC	02/24/07	AQ	Ground Water	17WW16-FEB2007
T16445-8	02/22/07	14:18	SMC	02/24/07	AQ	Ground Water	17WW02-FEB2007
T16445-9	02/22/07	14:18	SMC	02/24/07	AQ	Ground Water	17WW02-FEB2007 FD
T16445-10	02/22/07	12:45	SMC	02/24/07	AQ	Ground Water	29WW35-FEB2007
T16445-11	02/22/07	12:45	SMC	02/24/07	AQ	Ground Water	29WW35-FEB2007 FD

Accutest LabLink@31214 11:24 08-May-2008

Sample Summary

(continued)

Shaw E & I, Inc.

Job No: T16445

Longhorn Army Ammunition Plant
Project No: PROJECT #117591

Sample Number	Collected Date	Time	By	Received	Matrix Code	Type	Client Sample ID
T16445-12	02/22/07	15:00	SMC	02/24/07	AQ	Ground Water	29WW06-FEB2007
T16445-13	02/23/07	15:33	SMC	02/24/07	AQ	Ground Water	17WW05-FEB2007
T16445-14	02/23/07	16:30	SMC	02/24/07	AQ	Ground Water	7WW06-FEB2007
T16445-15	02/22/07	00:00	SMC	02/24/07	AQ	Trip Blank Water	TRIP BLANK
T16445-18	02/23/07	10:47	SMC	02/24/07	AQ	Ground Water	17WW130-FEB2007

SAMPLE DELIVERY GROUP CASE NARRATIVE

Client: Shaw E & I, Inc. **Job No** T16445

Site: Longhorn Army Ammunition Plant **Report Date** 3/19/2007 4:57:35 PM

15 Samples and 1 Trip Blank were collected on between 02/22/2007 and 02/23/2007 and were received at Accutest on 02/24/2007 properly preserved, at 11 Deg. C and intact. These Samples received an Accutest job number of T16445. A listing of the Laboratory Sample ID, Client Sample ID and dates of collection are presented in the Results Summary Section of this report.

Except as noted below, all method specified calibrations and quality control performance criteria were met for this job. For more information, please refer to QC summary pages.

Volatiles by GCMS By Method SW846 8260B

Matrix AQ **Batch ID:** VF2314

- All samples were analyzed within the recommended method holding time.
- All method blanks for this batch meet method specific criteria.
- Sample(s) T16445-5MS, T16445-5MSD were used as the QC samples indicated.
- Matrix Spike Recovery(s) for Trichloroethylene are outside control limits. Outside control limits due to high level in sample relative to spike amount.

Matrix AQ **Batch ID:** VF2315

- All samples were analyzed within the recommended method holding time.
- All method blanks for this batch meet method specific criteria.
- Sample(s) T16445-3MS, T16445-3MSD were used as the QC samples indicated.
- Matrix Spike Recovery(s) for cis-1,2-Dichloroethylene, Trichloroethylene are outside control limits. Outside control limits due to high level in sample relative to spike amount.
- T16445-3: For QC only.

Matrix AQ **Batch ID:** VF2318

- All method blanks for this batch meet method specific criteria.
- Sample(s) T16445-4MS, T16445-4MSD were used as the QC samples indicated.

Volatiles by GC By Method RSKSOP-147/175

Matrix AQ **Batch ID:** F:GXY992

- Analysis performed at Accutest Laboratories, Orlando, FL.

Extractables by GC By Method SW846 8330A

Matrix AQ **Batch ID:** F:OP19677

- All hits confirmed by reanalysis on a dissimilar column. Analysis performed at Accutest Laboratories, Orlando, FL.

Wet Chemistry By Method EPA 120.1

Matrix AQ **Batch ID:** F:R17941

- Specific Conductivity: Analysis performed at Accutest Laboratories, Orlando, FL.

Matrix AQ **Batch ID:** GN11355

- All samples were analyzed within the recommended method holding time.
- All method blanks for this batch meet method specific criteria.
- Sample(s) T16445-5DUP were used as the QC samples for Specific Conductivity.

Wet Chemistry By Method EPA 150.1/9040

Matrix AQ **Batch ID:** GN11323

- Sample(s) T16445-18DUP, T16445-5DUP, T16445-7DUP were used as the QC samples for pH.

Wet Chemistry By Method EPA 310.1

Matrix AQ **Batch ID:** GN11375

- All method blanks for this batch meet method specific criteria.
- Sample(s) T16445-5DUP, T16445-5MS were used as the QC samples for Alkalinity, Total as CaCO3.

Wet Chemistry By Method EPA 314

Matrix AQ **Batch ID:** F:GP9044

- Perchlorate: Analysis performed at Accutest Laboratories, Orlando, FL.
- Estimated value, above calibration range. Analysis performed at Accutest Laboratories, Orlando, FL.

Wet Chemistry By Method EPA 325.3

Matrix AQ **Batch ID:** GN11343

- All samples were analyzed within the recommended method holding time.
- All method blanks for this batch meet method specific criteria.
- Sample(s) T16445-5DUP, T16445-5MS were used as the QC samples for Chloride.

Wet Chemistry By Method EPA 353.2

Matrix AQ **Batch ID:** GN11290

- All method blanks for this batch meet method specific criteria.
- Sample(s) T16445-5DUP, T16445-5MS were used as the QC samples for Nitrogen, Nitrite.

Matrix AQ **Batch ID:** GN11291

- All method blanks for this batch meet method specific criteria.
- Sample(s) T16445-5DUP, T16445-5MS were used as the QC samples for Nitrogen, Nitrate + Nitrite.

Matrix AQ **Batch ID:** GN11300

- All method blanks for this batch meet method specific criteria.
- Sample(s) T16445-18DUP, T16445-18MS were used as the QC samples for Nitrogen, Nitrite.

Matrix AQ **Batch ID:** GN11301

- All method blanks for this batch meet method specific criteria.
- Sample(s) T16445-18DUP, T16445-18MS were used as the QC samples for Nitrogen, Nitrate + Nitrite.
- The following samples were run outside of holding time for method EPA 353.2: T16445-18

Wet Chemistry By Method EPA 375.3

Matrix	AQ	Batch ID:	GN11356

- All samples were analyzed within the recommended method holding time.
- All method blanks for this batch meet method specific criteria.
- Sample(s) T16445-5DUP, T16445-5MS were used as the QC samples for Sulfate.

Wet Chemistry By Method EPA 376.1

Matrix	AQ	Batch ID:	GN11313

- All method blanks for this batch meet method specific criteria.
- Sample(s) T16445-5DUP were used as the QC samples for Sulfide.

Wet Chemistry By Method EPA 415.1/9060

Matrix	AQ	Batch ID:	GN11304

- All samples were analyzed within the recommended method holding time.
- All method blanks for this batch meet method specific criteria.
- Sample(s) T16445-18DUP, T16445-18MS were used as the QC samples for Total Organic Carbon.

Matrix	AQ	Batch ID:	GN11311

- All samples were analyzed within the recommended method holding time.
- All method blanks for this batch meet method specific criteria.
- Sample(s) T16445-5DUP, T16445-5MS were used as the QC samples for Total Organic Carbon.

Matrix	AQ	Batch ID:	GN11317

- All samples were analyzed within the recommended method holding time.
- All method blanks for this batch meet method specific criteria.
- Sample(s) T16445-8DUP, T16445-8MS were used as the QC samples for Total Organic Carbon.

Wet Chemistry By Method SM18 4500NO3E/NO2B

Matrix	AQ	Batch ID:	R15434

- Nitrogen, Nitrate: Calculated as: (Nitrogen, Nitrate + Nitrite) - (Nitrogen, Nitrite)

Accutest Laboratories Gulf Coast (ALGC) certifies that this report meets the project requirements for analytical data produced for the samples as received at ALGC and as stated on the COC. ALGC certifies that the data meets the Data QualityObjectives for precision, accuracy and completeness as specified in the ALGC Quality Manual except as noted above. This report is to be used in its entirety. ALGC is not responsible for any assumptions of data quality if partial data packages are used

SAMPLE DELIVERY GROUP CASE NARRATIVE

Client: Accutest Laboratories Gulf Coast, Inc. **Job No:** T16445

Site: ITTXHO: Longhorn Army Ammunition Plant **Report Date:** 3/19/2007 10:48:45

16 Samples were collected on between 02/22/2007 and 02/23/2007 and were received at Accutest SE on 02/28/2007 properly preserved, at 1.8 Deg. C and intact. These Samples had an Accutest job number of T16445. A listing of the Laboratory Sample ID, Client Sample ID and dates of collection are presented in the Results Summary Section of this report.

Except as noted below, all method specified calibrations and quality control performance criteria were met for this job. For more information, please refer to QC summary pages.

Volatiles by GC by Method RSKSOP-147/175

Matrix: AQ **Batch ID:** GXY992

All samples were analyzed within the recommended method holding time.

All method blanks for this batch meet method specific criteria.

Samples T16445-5DUP, T16445-5MS were used as the QC samples indicated.

Extractables by GC by Method SW846 8330A

Matrix: AQ **Batch ID:** OP19677

All samples were extracted within the recommended method holding time.

All samples were analyzed within the recommended method holding time.

All method blanks for this batch meet method specific criteria.

Samples F47539-3MS, F47539-3MSD were used as the QC samples indicated.

T16445-12: Confirmation run.

T16445-12: All hits confirmed by reanalysis on a dissimilar column.

Wet Chemistry by Method EPA 314

Matrix: AQ **Batch ID:** GP9044

All samples were prepped within the recommended method holding time.

All samples were analyzed within the recommended method holding time.

All method blanks for this batch meet method specific criteria.

Samples T16445-5DUP, T16445-5MS, T16445-6DUP, T16445-6MS were used as the QC samples for Perchlorate.

T16445-12 for Perchlorate: Dilution required due to matrix interference.

T16445-6 for Perchlorate: Estimated value, above calibration range. Results confirmed by re-analysis.

Accutest Laboratories Southeast (ALSE) certifies that this report meets the project requirements for analytical data produced for the samples as received at ALSE and as stated on the COC. ALSE certifies that the data meets the Data Quality Objectives for precision, accuracy and completeness as specified in the ALSE Quality Manual except as noted above. This report is to be used in its entirety. ALSE is not responsible for any assumptions of data quality if partial data packages are used.

Narrative prepared by:

_____ Date: March 19, 2007

Ellen Pampel, Inorganic QA (signature on file)

Monday, March 19, 2007

Sample Results

Report of Analysis

Accutest LabLink@31214 11:24 08-May-2008

Report of Analysis

Client Sample ID:	29WW38-FEB2007		
Lab Sample ID:	T16445-1	**Date Sampled:**	02/22/07
Matrix:	AQ - Ground Water	**Date Received:**	02/24/07
Method:	SW846 8260B	**Percent Solids:**	n/a
Project:	Longhorn Army Ammunition Plant		

	File ID	DF	Analyzed	By	Prep Date	Prep Batch	Analytical Batch
Run #1	F0079178.D	1	03/07/07	LJ	n/a	n/a	VF2314
Run #2							

	Purge Volume
Run #1	5.0 ml
Run #2	

VOA TCL List

CAS No.	Compound	Result	RL	MDL	Units	Q
67-64-1	Acetone	2.8 U	50	2.8	ug/l	
71-43-2	Benzene	0.23 U	2.0	0.23	ug/l	
75-27-4	Bromodichloromethane	0.33 U	2.0	0.33	ug/l	
75-25-2	Bromoform	0.65 U	2.0	0.65	ug/l	
108-90-7	Chlorobenzene	0.54 U	2.0	0.54	ug/l	
75-00-3	Chloroethane	0.46 U	2.0	0.46	ug/l	
67-66-3	Chloroform	0.66 U	2.0	0.66	ug/l	
75-15-0	Carbon disulfide	0.62 U	2.0	0.62	ug/l	
56-23-5	Carbon tetrachloride	0.52 U	2.0	0.52	ug/l	
75-34-3	1,1-Dichloroethane	0.52 U	2.0	0.52	ug/l	
75-35-4	1,1-Dichloroethylene	0.68 U	2.0	0.68	ug/l	
107-06-2	1,2-Dichloroethane	0.53 U	2.0	0.53	ug/l	
78-87-5	1,2-Dichloropropane	0.59 U	2.0	0.59	ug/l	
124-48-1	Dibromochloromethane	0.68 U	2.0	0.68	ug/l	
156-59-2	cis-1,2-Dichloroethylene	0.83 U	2.0	0.83	ug/l	
10061-01-5	cis-1,3-Dichloropropene	0.59 U	2.0	0.59	ug/l	
156-60-5	trans-1,2-Dichloroethylene	0.75 U	2.0	0.75	ug/l	
10061-02-6	trans-1,3-Dichloropropene	0.61 U	2.0	0.61	ug/l	
100-41-4	Ethylbenzene	0.48 U	2.0	0.48	ug/l	
591-78-6	2-Hexanone	1.9 U	10	1.9	ug/l	
108-10-1	4-Methyl-2-pentanone	7.3 U	10	7.3	ug/l	
74-83-9	Methyl bromide	0.47 U	2.0	0.47	ug/l	
74-87-3	Methyl chloride	0.60 U	2.0	0.60	ug/l	
75-09-2	Methylene chloride	0.67 U	5.0	0.67	ug/l	
78-93-3	Methyl ethyl ketone	3.0 U	10	3.0	ug/l	
100-42-5	Styrene	0.50 U	2.0	0.50	ug/l	
71-55-6	1,1,1-Trichloroethane	0.37 U	2.0	0.37	ug/l	
79-34-5	1,1,2,2-Tetrachloroethane	0.46 U	2.0	0.46	ug/l	
79-00-5	1,1,2-Trichloroethane	0.66 U	2.0	0.66	ug/l	
127-18-4	Tetrachloroethylene	0.74 U	2.0	0.74	ug/l	
108-88-3	Toluene	0.54 U	2.0	0.54	ug/l	
79-01-6	Trichloroethylene	0.63 U	2.0	0.63	ug/l	

U = Not detected MDL - Method Detection Limit
RL = Reporting Limit
E = Indicates value exceeds calibration range
J = Indicates an estimated value
B = Indicates analyte found in associated method blank
N = Indicates presumptive evidence of a compound

Report of Analysis

Client Sample ID:	29WW38-FEB2007		
Lab Sample ID:	T16445-1	**Date Sampled:**	02/22/07
Matrix:	AQ - Ground Water	**Date Received:**	02/24/07
Method:	SW846 8260B	**Percent Solids:**	n/a
Project:	Longhorn Army Ammunition Plant		

VOA TCL List

CAS No.	Compound	Result	RL	MDL	Units	Q
75-01-4	Vinyl chloride	0.32 U	2.0	0.32	ug/l	
1330-20-7	Xylene (total)	1.1 U	6.0	1.1	ug/l	

CAS No.	Surrogate Recoveries	Run# 1	Run# 2	Limits
1868-53-7	Dibromofluoromethane	109%		73-139%
17060-07-0	1,2-Dichloroethane-D4	103%		66-139%
2037-26-5	Toluene-D8	109%		77-148%
460-00-4	4-Bromofluorobenzene	129%		84-150%

U = Not detected MDL - Method Detection Limit
RL = Reporting Limit
E = Indicates value exceeds calibration range
J = Indicates an estimated value
B = Indicates analyte found in associated method blank
N = Indicates presumptive evidence of a compound

Accutest LabLink@31214 11:24 08-May-2008

Report of Analysis

Client Sample ID:	29WW38-FEB2007		
Lab Sample ID:	T16445-1	**Date Sampled:**	02/22/07
Matrix:	AQ - Ground Water	**Date Received:**	02/24/07
Method:	RSKSOP-147/175	**Percent Solids:**	n/a
Project:	Longhorn Army Ammunition Plant		

	File ID	DF	Analyzed	By	Prep Date	Prep Batch	Analytical Batch
Run #1 [a]	XY025255.D	1	03/01/07	AFL	n/a	n/a	F:GXY992
Run #2							

CAS No.	Compound	Result	RL	MDL	Units	Q
74-82-8	Methane	0.46	0.50	0.30	ug/l	J
74-84-0	Ethane	0.60 U	1.0	0.60	ug/l	
74-85-1	Ethene	0.80 U	1.0	0.80	ug/l	

(a) Analysis performed at Accutest Laboratories, Orlando, FL.

U = Not detected MDL - Method Detection Limit
RL = Reporting Limit
E = Indicates value exceeds calibration range
J = Indicates an estimated value
B = Indicates analyte found in associated method blank
N = Indicates presumptive evidence of a compound

Accutest LabLink@31214 11:24 08-May-2008

Report of Analysis

Client Sample ID:	29WW38-FEB2007		
Lab Sample ID:	T16445-1	**Date Sampled:**	02/22/07
Matrix:	AQ - Ground Water	**Date Received:**	02/24/07
Method:	SW846 8330A SW846 3535A	**Percent Solids:**	n/a
Project:	Longhorn Army Ammunition Plant		

	File ID	DF	Analyzed	By	Prep Date	Prep Batch	Analytical Batch
Run #1 [a]	GG020214.D	1	03/02/07	AFL	03/01/07	F:OP19677	F:GGG906
Run #2							

	Initial Volume	Final Volume
Run #1	1050 ml	10.0 ml
Run #2		

CAS No.	Compound	Result	RL	MDL	Units	Q
2691-41-0	HMX	0.057 U	0.19	0.057	ug/l	
121-82-4	RDX	0.071 U	0.19	0.071	ug/l	
99-65-0	1,3-Dinitrobenzene	0.067 U	0.19	0.067	ug/l	
606-20-2	2,6-Dinitrotoluene	0.062 U	0.19	0.062	ug/l	
121-14-2	2,4-Dinitrotoluene	0.071 U	0.19	0.071	ug/l	
35572-78-2	2-amino-4,6-Dinitrotoluene	0.067 U	0.19	0.067	ug/l	
19406-51-0	4-amino-2,6-Dinitrotoluene	0.076 U	0.19	0.076	ug/l	
98-95-3	Nitrobenzene	0.057 U	0.19	0.057	ug/l	
88-72-2	o-Nitrotoluene	0.057 U	0.19	0.057	ug/l	
99-08-1	m-Nitrotoluene	0.071 U	0.19	0.071	ug/l	
99-99-0	p-Nitrotoluene	0.071 U	0.19	0.071	ug/l	
479-45-8	Tetryl	0.071 U	0.19	0.071	ug/l	
99-35-4	1,3,5-Trinitrobenzene	0.090 U	0.19	0.090	ug/l	
118-96-7	2,4,6-Trinitrotoluene	0.076 U	0.19	0.076	ug/l	

CAS No.	Surrogate Recoveries	Run# 1	Run# 2	Limits
610-39-9	3,4-Dinitrotoluene	82%		70-136%

(a) Analysis performed at Accutest Laboratories, Orlando, FL.

U = Not detected MDL - Method Detection Limit
RL = Reporting Limit
E = Indicates value exceeds calibration range
J = Indicates an estimated value
B = Indicates analyte found in associated method blank
N = Indicates presumptive evidence of a compound

Accutest LabLink@31214 11:24 08-May-2008

Report of Analysis

Client Sample ID:	29WW38-FEB2007		
Lab Sample ID:	T16445-1	**Date Sampled:**	02/22/07
Matrix:	AQ - Ground Water	**Date Received:**	02/24/07
		Percent Solids:	n/a
Project:	Longhorn Army Ammunition Plant		

General Chemistry

Analyte	Result	RL	MDL	Units	DF	Analyzed	By	Method
Perchlorate by IC								
Perchlorate [a]	4.0 U	10	4.0	ug/l	1	03/02/07 16:00	AFL	EPA 314
Alkalinity, Total as CaCO3	132	10	0.30	mg/l	2	03/08/07 12:50	EB	EPA 310.1
Carbon Dioxide	83.0	5.0		mg/l	1	03/12/07	RM	SM18 4500CO2D
Chloride	9.0	1.0	0.57	mg/l	1	03/05/07 12:15	EB	EPA 325.3
Nitrogen, Nitrate [b]	< 0.10	0.10	0.0050	mg/l	1	02/26/07 09:23	LN	SM18 4500NO3E/NO2B
Nitrogen, Nitrate + Nitrite	0.030 B	0.050	0.0050	mg/l	1	02/26/07 09:23	LN	EPA 353.2
Nitrogen, Nitrite	0.0030 U	0.050	0.0030	mg/l	1	02/24/07 14:28	LN	EPA 353.2
Specific Conductivity [a]	408	0.50	0.50	umhos/cm	1	03/06/07	AFL	EPA 120.1
Sulfate	126	20	2.6	mg/l	2	03/06/07 18:00	EB	EPA 375.3
Sulfide	0.0 B	0.20		mg/l	1	03/01/07 12:10	LN	EPA 376.1
Total Organic Carbon	1.0	1.0	0.092	mg/l	1	02/27/07 15:10	LN	EPA 415.1/9060
pH	6.5			su	1	03/01/07 13:00	TW	EPA 150.1/9040

(a) Analysis performed at Accutest Laboratories, Orlando, FL.
(b) Calculated as: (Nitrogen, Nitrate + Nitrite) - (Nitrogen, Nitrite)

RL = Reporting Limit
MDL = Method Detection Limit

U = Indicates a result < MDL
B = Indicates a result > = MDL but < RL

Accutest LabLink@31214 11:24 08-May-2008

Report of Analysis

Client Sample ID:	47WW30-FEB2007		
Lab Sample ID:	T16445-2	**Date Sampled:**	02/22/07
Matrix:	AQ - Ground Water	**Date Received:**	02/24/07
Method:	SW846 8260B	**Percent Solids:**	n/a
Project:	Longhorn Army Ammunition Plant		

	File ID	DF	Analyzed	By	Prep Date	Prep Batch	Analytical Batch
Run #1	F0079173.D	1	03/07/07	LJ	n/a	n/a	VF2314
Run #2	F0079179.D	10	03/07/07	LJ	n/a	n/a	VF2314

	Purge Volume
Run #1	5.0 ml
Run #2	5.0 ml

VOA TCL List

CAS No.	Compound	Result	RL	MDL	Units	Q
67-64-1	Acetone	2.8 U	50	2.8	ug/l	
71-43-2	Benzene	0.23 U	2.0	0.23	ug/l	
75-27-4	Bromodichloromethane	0.33 U	2.0	0.33	ug/l	
75-25-2	Bromoform	0.65 U	2.0	0.65	ug/l	
108-90-7	Chlorobenzene	0.54 U	2.0	0.54	ug/l	
75-00-3	Chloroethane	0.46 U	2.0	0.46	ug/l	
67-66-3	Chloroform	0.66 U	2.0	0.66	ug/l	
75-15-0	Carbon disulfide	0.62 U	2.0	0.62	ug/l	
56-23-5	Carbon tetrachloride	0.52 U	2.0	0.52	ug/l	
75-34-3	1,1-Dichloroethane	0.52 U	2.0	0.52	ug/l	
75-35-4	1,1-Dichloroethylene	1.9	2.0	0.68	ug/l	J
107-06-2	1,2-Dichloroethane	0.53 U	2.0	0.53	ug/l	
78-87-5	1,2-Dichloropropane	0.59 U	2.0	0.59	ug/l	
124-48-1	Dibromochloromethane	0.68 U	2.0	0.68	ug/l	
156-59-2	cis-1,2-Dichloroethylene	6.8	2.0	0.83	ug/l	
10061-01-5	cis-1,3-Dichloropropene	0.59 U	2.0	0.59	ug/l	
156-60-5	trans-1,2-Dichloroethylene	0.75 U	2.0	0.75	ug/l	
10061-02-6	trans-1,3-Dichloropropene	0.61 U	2.0	0.61	ug/l	
100-41-4	Ethylbenzene	0.48 U	2.0	0.48	ug/l	
591-78-6	2-Hexanone	1.9 U	10	1.9	ug/l	
108-10-1	4-Methyl-2-pentanone	7.3 U	10	7.3	ug/l	
74-83-9	Methyl bromide	0.47 U	2.0	0.47	ug/l	
74-87-3	Methyl chloride	0.60 U	2.0	0.60	ug/l	
75-09-2	Methylene chloride	0.67 U	5.0	0.67	ug/l	
78-93-3	Methyl ethyl ketone	3.0 U	10	3.0	ug/l	
100-42-5	Styrene	0.50 U	2.0	0.50	ug/l	
71-55-6	1,1,1-Trichloroethane	0.37 U	2.0	0.37	ug/l	
79-34-5	1,1,2,2-Tetrachloroethane	0.46 U	2.0	0.46	ug/l	
79-00-5	1,1,2-Trichloroethane	0.66 U	2.0	0.66	ug/l	
127-18-4	Tetrachloroethylene	0.74 U	2.0	0.74	ug/l	
108-88-3	Toluene	0.54 U	2.0	0.54	ug/l	
79-01-6	Trichloroethylene	1060 [a]	20	6.3	ug/l	

U = Not detected MDL - Method Detection Limit
RL = Reporting Limit
E = Indicates value exceeds calibration range
J = Indicates an estimated value
B = Indicates analyte found in associated method blank
N = Indicates presumptive evidence of a compound

Report of Analysis

Client Sample ID:	47WW30-FEB2007		
Lab Sample ID:	T16445-2	**Date Sampled:**	02/22/07
Matrix:	AQ - Ground Water	**Date Received:**	02/24/07
Method:	SW846 8260B	**Percent Solids:**	n/a
Project:	Longhorn Army Ammunition Plant		

VOA TCL List

CAS No.	Compound	Result	RL	MDL	Units	Q
75-01-4	Vinyl chloride	0.32 U	2.0	0.32	ug/l	
1330-20-7	Xylene (total)	1.1 U	6.0	1.1	ug/l	

CAS No.	Surrogate Recoveries	Run# 1	Run# 2	Limits
1868-53-7	Dibromofluoromethane	107%	104%	73-139%
17060-07-0	1,2-Dichloroethane-D4	104%	101%	66-139%
2037-26-5	Toluene-D8	106%	107%	77-148%
460-00-4	4-Bromofluorobenzene	118%	128%	84-150%

(a) Result is from Run# 2

U = Not detected MDL - Method Detection Limit
RL = Reporting Limit
E = Indicates value exceeds calibration range
J = Indicates an estimated value
B = Indicates analyte found in associated method blank
N = Indicates presumptive evidence of a compound

Accutest LabLink@31214 11:24 08-May-2008

Report of Analysis

Client Sample ID:	47WW30-FEB2007		
Lab Sample ID:	T16445-2	**Date Sampled:**	02/22/07
Matrix:	AQ - Ground Water	**Date Received:**	02/24/07
Method:	RSKSOP-147/175	**Percent Solids:**	n/a
Project:	Longhorn Army Ammunition Plant		

	File ID	DF	Analyzed	By	Prep Date	Prep Batch	Analytical Batch
Run #1 [a]	XY025256.D	1	03/01/07	AFL	n/a	n/a	F:GXY992
Run #2							

CAS No.	Compound	Result	RL	MDL	Units	Q
74-82-8	Methane	1.68	0.50	0.30	ug/l	
74-84-0	Ethane	0.60 U	1.0	0.60	ug/l	
74-85-1	Ethene	0.80 U	1.0	0.80	ug/l	

(a) Analysis performed at Accutest Laboratories, Orlando, FL.

U = Not detected MDL - Method Detection Limit
RL = Reporting Limit
E = Indicates value exceeds calibration range
J = Indicates an estimated value
B = Indicates analyte found in associated method blank
N = Indicates presumptive evidence of a compound

Accutest LabLink@31214 11:24 08-May-2008

Report of Analysis

Client Sample ID:	47WW30-FEB2007		
Lab Sample ID:	T16445-2	**Date Sampled:**	02/22/07
Matrix:	AQ - Ground Water	**Date Received:**	02/24/07
		Percent Solids:	n/a
Project:	Longhorn Army Ammunition Plant		

General Chemistry

Analyte	Result	RL	MDL	Units	DF	Analyzed	By	Method
Perchlorate by IC								
Perchlorate [a]	4.0 U	10	4.0	ug/l	1	03/02/07 16:15	AFL	EPA 314
Alkalinity, Total as CaCO3	752	25	0.30	mg/l	5	03/08/07 12:50	EB	EPA 310.1
Carbon Dioxide	150	5.0		mg/l	1	03/12/07	RM	SM18 4500CO2D
Chloride	726	20	0.57	mg/l	20	03/05/07 12:15	EB	EPA 325.3
Nitrogen, Nitrate [b]	< 0.10	0.10	0.0050	mg/l	1	02/26/07 09:23	LN	SM18 4500NO3E/NO2B
Nitrogen, Nitrate + Nitrite	0.0050 U	0.050	0.0050	mg/l	1	02/26/07 09:23	LN	EPA 353.2
Nitrogen, Nitrite	0.0030 U	0.050	0.0030	mg/l	1	02/24/07 14:28	LN	EPA 353.2
Specific Conductivity [a]	4130	0.50	0.50	umhos/cm	1	03/06/07	AFL	EPA 120.1
Sulfate	637	40	2.6	mg/l	4	03/06/07 18:00	EB	EPA 375.3
Sulfide	0.0 B	0.20		mg/l	1	03/01/07 12:10	LN	EPA 376.1
Total Organic Carbon	2.0	1.0	0.092	mg/l	1	02/27/07 15:10	LN	EPA 415.1/9060
pH	7.1			su	1	03/01/07 13:00	TW	EPA 150.1/9040

(a) Analysis performed at Accutest Laboratories, Orlando, FL.
(b) Calculated as: (Nitrogen, Nitrate + Nitrite) - (Nitrogen, Nitrite)

RL = Reporting Limit
MDL = Method Detection Limit
U = Indicates a result < MDL
B = Indicates a result > = MDL but < RL

Accutest LabLink@31214 11:24 08-May-2008

Report of Analysis

Client Sample ID:	LHSMW43-FEB2007		
Lab Sample ID:	T16445-3	**Date Sampled:**	02/22/07
Matrix:	AQ - Ground Water	**Date Received:**	02/24/07
Method:	SW846 8260B	**Percent Solids:**	n/a
Project:	Longhorn Army Ammunition Plant		

	File ID	DF	Analyzed	By	Prep Date	Prep Batch	Analytical Batch
Run #1	F0079232.D	1	03/08/07	LJ	n/a	n/a	VF2318
Run #2 [a]	F0079190.D	1	03/07/07	LJ	n/a	n/a	VF2315
Run #3	F0079233.D	100	03/08/07	LJ	n/a	n/a	VF2318

	Purge Volume
Run #1	5.0 ml
Run #2	5.0 ml
Run #3	5.0 ml

VOA TCL List

CAS No.	Compound	Result	RL	MDL	Units	Q
67-64-1	Acetone	2.8 U	50	2.8	ug/l	
71-43-2	Benzene	0.23 U	2.0	0.23	ug/l	
75-27-4	Bromodichloromethane	0.33 U	2.0	0.33	ug/l	
75-25-2	Bromoform	0.65 U	2.0	0.65	ug/l	
108-90-7	Chlorobenzene	0.54 U	2.0	0.54	ug/l	
75-00-3	Chloroethane	0.46 U	2.0	0.46	ug/l	
67-66-3	Chloroform	0.66 U	2.0	0.66	ug/l	
75-15-0	Carbon disulfide	0.62 U	2.0	0.62	ug/l	
56-23-5	Carbon tetrachloride	0.52 U	2.0	0.52	ug/l	
75-34-3	1,1-Dichloroethane	1.8	2.0	0.52	ug/l	J
75-35-4	1,1-Dichloroethylene	10.3	2.0	0.68	ug/l	
107-06-2	1,2-Dichloroethane	0.53 U	2.0	0.53	ug/l	
78-87-5	1,2-Dichloropropane	0.59 U	2.0	0.59	ug/l	
124-48-1	Dibromochloromethane	0.68 U	2.0	0.68	ug/l	
156-59-2	cis-1,2-Dichloroethylene	605 [b]	200	83	ug/l	
10061-01-5	cis-1,3-Dichloropropene	0.59 U	2.0	0.59	ug/l	
156-60-5	trans-1,2-Dichloroethylene	1.9	2.0	0.75	ug/l	J
10061-02-6	trans-1,3-Dichloropropene	0.61 U	2.0	0.61	ug/l	
100-41-4	Ethylbenzene	0.48 U	2.0	0.48	ug/l	
591-78-6	2-Hexanone	1.9 U	10	1.9	ug/l	
108-10-1	4-Methyl-2-pentanone	7.3 U	10	7.3	ug/l	
74-83-9	Methyl bromide	0.47 U	2.0	0.47	ug/l	
74-87-3	Methyl chloride	0.60 U	2.0	0.60	ug/l	
75-09-2	Methylene chloride	0.67 U	5.0	0.67	ug/l	
78-93-3	Methyl ethyl ketone	3.0 U	10	3.0	ug/l	
100-42-5	Styrene	0.50 U	2.0	0.50	ug/l	
71-55-6	1,1,1-Trichloroethane	0.37 U	2.0	0.37	ug/l	
79-34-5	1,1,2,2-Tetrachloroethane	0.46 U	2.0	0.46	ug/l	
79-00-5	1,1,2-Trichloroethane	1.8	2.0	0.66	ug/l	J
127-18-4	Tetrachloroethylene	82.0	2.0	0.74	ug/l	

U = Not detected MDL - Method Detection Limit
RL = Reporting Limit
E = Indicates value exceeds calibration range
J = Indicates an estimated value
B = Indicates analyte found in associated method blank
N = Indicates presumptive evidence of a compound

Report of Analysis

Client Sample ID:	LHSMW43-FEB2007		
Lab Sample ID:	T16445-3	**Date Sampled:**	02/22/07
Matrix:	AQ - Ground Water	**Date Received:**	02/24/07
Method:	SW846 8260B	**Percent Solids:**	n/a
Project:	Longhorn Army Ammunition Plant		

VOA TCL List

CAS No.	Compound	Result	RL	MDL	Units	Q
108-88-3	Toluene	0.54 U	2.0	0.54	ug/l	
79-01-6	Trichloroethylene	11600 [b]	200	63	ug/l	
75-01-4	Vinyl chloride	3.7	2.0	0.32	ug/l	
1330-20-7	Xylene (total)	1.1 U	6.0	1.1	ug/l	

CAS No.	Surrogate Recoveries	Run# 1	Run# 2	Run# 3	Limits
1868-53-7	Dibromofluoromethane	107%	106%	102%	73-139%
17060-07-0	1,2-Dichloroethane-D4	102%	106%	94%	66-139%
2037-26-5	Toluene-D8	100%	102%	104%	77-148%
460-00-4	4-Bromofluorobenzene	112%	123%	111%	84-150%

(a) For QC only.
(b) Result is from Run# 3

U = Not detected MDL - Method Detection Limit
RL = Reporting Limit
E = Indicates value exceeds calibration range
J = Indicates an estimated value
B = Indicates analyte found in associated method blank
N = Indicates presumptive evidence of a compound

Accutest LabLink@31214 11:24 08-May-2008

Report of Analysis

Client Sample ID:	LHSMW43-FEB2007		
Lab Sample ID:	T16445-3	**Date Sampled:**	02/22/07
Matrix:	AQ - Ground Water	**Date Received:**	02/24/07
Method:	RSKSOP-147/175	**Percent Solids:**	n/a
Project:	Longhorn Army Ammunition Plant		

	File ID	DF	Analyzed	By	Prep Date	Prep Batch	Analytical Batch
Run #1 [a]	XY025257.D	1	03/01/07	AFL	n/a	n/a	F:GXY992
Run #2							

CAS No.	Compound	Result	RL	MDL	Units	Q
74-82-8	Methane	7.07	0.50	0.30	ug/l	
74-84-0	Ethane	0.62	1.0	0.60	ug/l	J
74-85-1	Ethene	2.7	1.0	0.80	ug/l	

(a) Analysis performed at Accutest Laboratories, Orlando, FL.

U = Not detected MDL - Method Detection Limit
RL = Reporting Limit
E = Indicates value exceeds calibration range
J = Indicates an estimated value
B = Indicates analyte found in associated method blank
N = Indicates presumptive evidence of a compound

Accutest LabLink@31214 11:24 08-May-2008

Report of Analysis

Client Sample ID:	LHSMW43-FEB2007		
Lab Sample ID:	T16445-3	**Date Sampled:**	02/22/07
Matrix:	AQ - Ground Water	**Date Received:**	02/24/07
		Percent Solids:	n/a
Project:	Longhorn Army Ammunition Plant		

General Chemistry

Analyte	Result	RL	MDL	Units	DF	Analyzed	By	Method
Perchlorate by IC								
Perchlorate [a]	4.0 U	10	4.0	ug/l	1	03/02/07 16:29	AFL	EPA 314
Alkalinity, Total as CaCO3	295	25	0.30	mg/l	5	03/08/07 12:50	EB	EPA 310.1
Carbon Dioxide	93.0	5.0		mg/l	1	03/12/07	RM	SM18 4500CO2D
Chloride	290	33	0.57	mg/l	33.3	03/05/07 12:15	EB	EPA 325.3
Nitrogen, Nitrate [b]	< 0.10	0.10	0.0050	mg/l	1	02/26/07 09:23	LN	SM18 4500NO3E/NO2B
Nitrogen, Nitrate + Nitrite	0.0050 U	0.050	0.0050	mg/l	1	02/26/07 09:23	LN	EPA 353.2
Nitrogen, Nitrite	0.0030 U	0.050	0.0030	mg/l	1	02/24/07 14:28	LN	EPA 353.2
Specific Conductivity [a]	2920	0.50	0.50	umhos/cm	1	03/27/07	AFL	EPA 120.1
Sulfate	756	40	2.6	mg/l	4	03/06/07 18:00	EB	EPA 375.3
Sulfide	0.0 B	0.20		mg/l	1	03/01/07 12:10	LN	EPA 376.1
Total Organic Carbon	4.0	1.0	0.092	mg/l	1	02/27/07 15:10	LN	EPA 415.1/9060
pH	6.8			su	1	03/01/07 13:00	TW	EPA 150.1/9040

(a) Analysis performed at Accutest Laboratories, Orlando, FL.
(b) Calculated as: (Nitrogen, Nitrate + Nitrite) - (Nitrogen, Nitrite)

RL = Reporting Limit
MDL = Method Detection Limit
U = Indicates a result < MDL
B = Indicates a result > = MDL but < RL

Report of Analysis

Client Sample ID:	50WW06-FEB2007		
Lab Sample ID:	T16445-4	**Date Sampled:**	02/22/07
Matrix:	AQ - Ground Water	**Date Received:**	02/24/07
Method:	SW846 8260B	**Percent Solids:**	n/a
Project:	Longhorn Army Ammunition Plant		

	File ID	DF	Analyzed	By	Prep Date	Prep Batch	Analytical Batch
Run #1	F0079226.D	1	03/08/07	LJ	n/a	n/a	VF2318
Run #2							

	Purge Volume
Run #1	5.0 ml
Run #2	

VOA TCL List

CAS No.	Compound	Result	RL	MDL	Units	Q
67-64-1	Acetone	2.8 U	50	2.8	ug/l	
71-43-2	Benzene	0.23 U	2.0	0.23	ug/l	
75-27-4	Bromodichloromethane	0.33 U	2.0	0.33	ug/l	
75-25-2	Bromoform	0.65 U	2.0	0.65	ug/l	
108-90-7	Chlorobenzene	0.54 U	2.0	0.54	ug/l	
75-00-3	Chloroethane	0.46 U	2.0	0.46	ug/l	
67-66-3	Chloroform	0.66 U	2.0	0.66	ug/l	
75-15-0	Carbon disulfide	0.62 U	2.0	0.62	ug/l	
56-23-5	Carbon tetrachloride	0.52 U	2.0	0.52	ug/l	
75-34-3	1,1-Dichloroethane	0.52 U	2.0	0.52	ug/l	
75-35-4	1,1-Dichloroethylene	0.68 U	2.0	0.68	ug/l	
107-06-2	1,2-Dichloroethane	0.53 U	2.0	0.53	ug/l	
78-87-5	1,2-Dichloropropane	0.59 U	2.0	0.59	ug/l	
124-48-1	Dibromochloromethane	0.68 U	2.0	0.68	ug/l	
156-59-2	cis-1,2-Dichloroethylene	0.83 U	2.0	0.83	ug/l	
10061-01-5	cis-1,3-Dichloropropene	0.59 U	2.0	0.59	ug/l	
156-60-5	trans-1,2-Dichloroethylene	0.75 U	2.0	0.75	ug/l	
10061-02-6	trans-1,3-Dichloropropene	0.61 U	2.0	0.61	ug/l	
100-41-4	Ethylbenzene	0.48 U	2.0	0.48	ug/l	
591-78-6	2-Hexanone	1.9 U	10	1.9	ug/l	
108-10-1	4-Methyl-2-pentanone	7.3 U	10	7.3	ug/l	
74-83-9	Methyl bromide	0.47 U	2.0	0.47	ug/l	
74-87-3	Methyl chloride	0.60 U	2.0	0.60	ug/l	
75-09-2	Methylene chloride	0.67 U	5.0	0.67	ug/l	
78-93-3	Methyl ethyl ketone	3.0 U	10	3.0	ug/l	
100-42-5	Styrene	0.50 U	2.0	0.50	ug/l	
71-55-6	1,1,1-Trichloroethane	0.37 U	2.0	0.37	ug/l	
79-34-5	1,1,2,2-Tetrachloroethane	0.46 U	2.0	0.46	ug/l	
79-00-5	1,1,2-Trichloroethane	0.66 U	2.0	0.66	ug/l	
127-18-4	Tetrachloroethylene	0.74 U	2.0	0.74	ug/l	
108-88-3	Toluene	0.54 U	2.0	0.54	ug/l	
79-01-6	Trichloroethylene	2.0	2.0	0.63	ug/l	

U = Not detected MDL - Method Detection Limit
RL = Reporting Limit
E = Indicates value exceeds calibration range
J = Indicates an estimated value
B = Indicates analyte found in associated method blank
N = Indicates presumptive evidence of a compound

Report of Analysis

Client Sample ID:	50WW06-FEB2007		
Lab Sample ID:	T16445-4	**Date Sampled:**	02/22/07
Matrix:	AQ - Ground Water	**Date Received:**	02/24/07
Method:	SW846 8260B	**Percent Solids:**	n/a
Project:	Longhorn Army Ammunition Plant		

VOA TCL List

CAS No.	Compound	Result	RL	MDL	Units	Q
75-01-4	Vinyl chloride	0.32 U	2.0	0.32	ug/l	
1330-20-7	Xylene (total)	1.1 U	6.0	1.1	ug/l	

CAS No.	Surrogate Recoveries	Run# 1	Run# 2	Limits
1868-53-7	Dibromofluoromethane	102%		73-139%
17060-07-0	1,2-Dichloroethane-D4	98%		66-139%
2037-26-5	Toluene-D8	106%		77-148%
460-00-4	4-Bromofluorobenzene	119%		84-150%

U = Not detected MDL - Method Detection Limit
RL = Reporting Limit
E = Indicates value exceeds calibration range
J = Indicates an estimated value
B = Indicates analyte found in associated method blank
N = Indicates presumptive evidence of a compound

Accutest LabLink@31214 11:24 08-May-2008

Report of Analysis

Client Sample ID:	50WW06-FEB2007		
Lab Sample ID:	T16445-4	**Date Sampled:**	02/22/07
Matrix:	AQ - Ground Water	**Date Received:**	02/24/07
Method:	RSKSOP-147/175	**Percent Solids:**	n/a
Project:	Longhorn Army Ammunition Plant		

	File ID	DF	Analyzed	By	Prep Date	Prep Batch	Analytical Batch
Run #1 [a]	XY025258.D	1	03/01/07	AFL	n/a	n/a	F:GXY992
Run #2							

CAS No.	Compound	Result	RL	MDL	Units	Q
74-82-8	Methane	2.50	0.50	0.30	ug/l	
74-84-0	Ethane	0.60 U	1.0	0.60	ug/l	
74-85-1	Ethene	0.80 U	1.0	0.80	ug/l	

(a) Analysis performed at Accutest Laboratories, Orlando, FL.

U = Not detected MDL - Method Detection Limit
RL = Reporting Limit
E = Indicates value exceeds calibration range
J = Indicates an estimated value
B = Indicates analyte found in associated method blank
N = Indicates presumptive evidence of a compound

Accutest LabLink@31214 11:24 08-May-2008

Report of Analysis

Client Sample ID:	50WW06-FEB2007		
Lab Sample ID:	T16445-4	**Date Sampled:**	02/22/07
Matrix:	AQ - Ground Water	**Date Received:**	02/24/07
		Percent Solids:	n/a
Project:	Longhorn Army Ammunition Plant		

General Chemistry

Analyte	Result	RL	MDL	Units	DF	Analyzed	By	Method
Perchlorate by IC								
Perchlorate [a]	4.0 U	10	4.0	ug/l	1	03/02/07 16:43	AFL	EPA 314
Alkalinity, Total as CaCO3	278	25	0.30	mg/l	5	03/08/07 12:50	EB	EPA 310.1
Carbon Dioxide	44.0	5.0		mg/l	1	03/12/07	RM	SM18 4500CO2D
Chloride	209	20	0.57	mg/l	20	03/05/07 12:15	EB	EPA 325.3
Nitrogen, Nitrate [b]	< 0.10	0.10	0.0050	mg/l	1	02/26/07 09:23	LN	SM18 4500NO3E/NO2B
Nitrogen, Nitrate + Nitrite	0.040 B	0.050	0.0050	mg/l	1	02/26/07 09:23	LN	EPA 353.2
Nitrogen, Nitrite	0.0030 U	0.050	0.0030	mg/l	1	02/24/07 14:28	LN	EPA 353.2
Specific Conductivity [a]	1260	0.50	0.50	umhos/cm	1	03/06/07	AFL	EPA 120.1
Sulfate	203	20	2.6	mg/l	2	03/06/07 18:00	EB	EPA 375.3
Sulfide	0.0 B	0.20		mg/l	1	03/01/07 12:10	LN	EPA 376.1
Total Organic Carbon	3.0	1.0	0.092	mg/l	1	02/27/07 15:10	LN	EPA 415.1/9060
pH	7.1			su	1	03/01/07 13:00	TW	EPA 150.1/9040

(a) Analysis performed at Accutest Laboratories, Orlando, FL.
(b) Calculated as: (Nitrogen, Nitrate + Nitrite) - (Nitrogen, Nitrite)

RL = Reporting Limit
MDL = Method Detection Limit

U = Indicates a result < MDL
B = Indicates a result > = MDL but < RL

Accutest LabLink@31214 11:24 08-May-2008

Report of Analysis

Client Sample ID:	50WW05-FEB2007		
Lab Sample ID:	T16445-5	**Date Sampled:**	02/23/07
Matrix:	AQ - Ground Water	**Date Received:**	02/24/07
Method:	SW846 8260B	**Percent Solids:**	n/a
Project:	Longhorn Army Ammunition Plant		

	File ID	DF	Analyzed	By	Prep Date	Prep Batch	Analytical Batch
Run #1	F0079169.D	1	03/07/07	LJ	n/a	n/a	VF2314
Run #2	F0079180.D	20	03/07/07	LJ	n/a	n/a	VF2314

	Purge Volume
Run #1	5.0 ml
Run #2	5.0 ml

VOA TCL List

CAS No.	Compound	Result	RL	MDL	Units	Q
67-64-1	Acetone	2.8 U	50	2.8	ug/l	
71-43-2	Benzene	0.23 U	2.0	0.23	ug/l	
75-27-4	Bromodichloromethane	0.33 U	2.0	0.33	ug/l	
75-25-2	Bromoform	0.65 U	2.0	0.65	ug/l	
108-90-7	Chlorobenzene	0.54 U	2.0	0.54	ug/l	
75-00-3	Chloroethane	0.46 U	2.0	0.46	ug/l	
67-66-3	Chloroform	0.66 U	2.0	0.66	ug/l	
75-15-0	Carbon disulfide	0.62 U	2.0	0.62	ug/l	
56-23-5	Carbon tetrachloride	0.52 U	2.0	0.52	ug/l	
75-34-3	1,1-Dichloroethane	1.3	2.0	0.52	ug/l	J
75-35-4	1,1-Dichloroethylene	12.9	2.0	0.68	ug/l	
107-06-2	1,2-Dichloroethane	13.5	2.0	0.53	ug/l	
78-87-5	1,2-Dichloropropane	0.59 U	2.0	0.59	ug/l	
124-48-1	Dibromochloromethane	0.68 U	2.0	0.68	ug/l	
156-59-2	cis-1,2-Dichloroethylene	48.2	2.0	0.83	ug/l	
10061-01-5	cis-1,3-Dichloropropene	0.59 U	2.0	0.59	ug/l	
156-60-5	trans-1,2-Dichloroethylene	0.75 U	2.0	0.75	ug/l	
10061-02-6	trans-1,3-Dichloropropene	0.61 U	2.0	0.61	ug/l	
100-41-4	Ethylbenzene	0.48 U	2.0	0.48	ug/l	
591-78-6	2-Hexanone	1.9 U	10	1.9	ug/l	
108-10-1	4-Methyl-2-pentanone	7.3 U	10	7.3	ug/l	
74-83-9	Methyl bromide	0.47 U	2.0	0.47	ug/l	
74-87-3	Methyl chloride	0.60 U	2.0	0.60	ug/l	
75-09-2	Methylene chloride	0.67 U	5.0	0.67	ug/l	
78-93-3	Methyl ethyl ketone	3.0 U	10	3.0	ug/l	
100-42-5	Styrene	0.50 U	2.0	0.50	ug/l	
71-55-6	1,1,1-Trichloroethane	0.37 U	2.0	0.37	ug/l	
79-34-5	1,1,2,2-Tetrachloroethane	0.46 U	2.0	0.46	ug/l	
79-00-5	1,1,2-Trichloroethane	0.66 U	2.0	0.66	ug/l	
127-18-4	Tetrachloroethylene	5.1	2.0	0.74	ug/l	
108-88-3	Toluene	0.54 U	2.0	0.54	ug/l	
79-01-6	Trichloroethylene	1460 [a]	40	13	ug/l	

U = Not detected MDL - Method Detection Limit
RL = Reporting Limit
E = Indicates value exceeds calibration range
J = Indicates an estimated value
B = Indicates analyte found in associated method blank
N = Indicates presumptive evidence of a compound

Report of Analysis

Client Sample ID:	50WW05-FEB2007		
Lab Sample ID:	T16445-5	**Date Sampled:**	02/23/07
Matrix:	AQ - Ground Water	**Date Received:**	02/24/07
Method:	SW846 8260B	**Percent Solids:**	n/a
Project:	Longhorn Army Ammunition Plant		

VOA TCL List

CAS No.	Compound	Result	RL	MDL	Units	Q
75-01-4	Vinyl chloride	2.5	2.0	0.32	ug/l	
1330-20-7	Xylene (total)	1.1 U	6.0	1.1	ug/l	

CAS No.	Surrogate Recoveries	Run# 1	Run# 2	Limits
1868-53-7	Dibromofluoromethane	107%	105%	73-139%
17060-07-0	1,2-Dichloroethane-D4	105%	104%	66-139%
2037-26-5	Toluene-D8	105%	108%	77-148%
460-00-4	4-Bromofluorobenzene	114%	129%	84-150%

(a) Result is from Run# 2

U = Not detected MDL - Method Detection Limit
RL = Reporting Limit
E = Indicates value exceeds calibration range
J = Indicates an estimated value
B = Indicates analyte found in associated method blank
N = Indicates presumptive evidence of a compound

Accutest LabLink@31214 11:24 08-May-2008

Report of Analysis

Client Sample ID:	50WW05-FEB2007		
Lab Sample ID:	T16445-5	**Date Sampled:**	02/23/07
Matrix:	AQ - Ground Water	**Date Received:**	02/24/07
Method:	RSKSOP-147/175	**Percent Solids:**	n/a
Project:	Longhorn Army Ammunition Plant		

	File ID	DF	Analyzed	By	Prep Date	Prep Batch	Analytical Batch
Run #1 [a]	XY025259.D	1	03/01/07	AFL	n/a	n/a	F:GXY992
Run #2							

CAS No.	Compound	Result	RL	MDL	Units	Q
74-82-8	Methane	2.93	0.50	0.30	ug/l	
74-84-0	Ethane	0.60 U	1.0	0.60	ug/l	
74-85-1	Ethene	0.80 U	1.0	0.80	ug/l	

(a) Analysis performed at Accutest Laboratories, Orlando, FL.

U = Not detected MDL - Method Detection Limit
RL = Reporting Limit
E = Indicates value exceeds calibration range
J = Indicates an estimated value
B = Indicates analyte found in associated method blank
N = Indicates presumptive evidence of a compound

Accutest LabLink@31214 11:24 08-May-2008

Report of Analysis

Client Sample ID:	50WW05-FEB2007		
Lab Sample ID:	T16445-5	**Date Sampled:**	02/23/07
Matrix:	AQ - Ground Water	**Date Received:**	02/24/07
		Percent Solids:	n/a
Project:	Longhorn Army Ammunition Plant		

General Chemistry

Analyte	Result	RL	MDL	Units	DF	Analyzed	By	Method
Perchlorate by IC								
Perchlorate [a]	27.8	10	4.0	ug/l	1	03/02/07 16:58	AFL	EPA 314
Alkalinity, Total as CaCO3	457	25	0.30	mg/l	5	03/08/07 12:50	EB	EPA 310.1
Carbon Dioxide	73.0	5.0		mg/l	1	03/12/07	RM	SM18 4500CO2D
Chloride	253	20	0.57	mg/l	20	03/05/07 12:15	EB	EPA 325.3
Nitrogen, Nitrate [b]	< 0.10	0.10	0.0050	mg/l	1	02/26/07 09:23	LN	SM18 4500NO3E/NO2B
Nitrogen, Nitrate + Nitrite	0.0050 U	0.050	0.0050	mg/l	1	02/26/07 09:23	LN	EPA 353.2
Nitrogen, Nitrite	0.0030 U	0.050	0.0030	mg/l	1	02/24/07 14:28	LN	EPA 353.2
Specific Conductivity [a]	1800	0.50	0.50	umhos/cm	1	03/06/07	AFL	EPA 120.1
Sulfate	286	40	2.6	mg/l	4	03/06/07 18:00	EB	EPA 375.3
Sulfide	0.0 B	0.20		mg/l	1	03/01/07 12:10	LN	EPA 376.1
Total Organic Carbon	2.0	1.0	0.092	mg/l	1	02/27/07 15:10	LN	EPA 415.1/9060
pH	7.1			su	1	03/01/07 13:00	TW	EPA 150.1/9040

(a) Analysis performed at Accutest Laboratories, Orlando, FL.
(b) Calculated as: (Nitrogen, Nitrate + Nitrite) - (Nitrogen, Nitrite)

RL = Reporting Limit
MDL = Method Detection Limit
U = Indicates a result < MDL
B = Indicates a result > = MDL but < RL

Accutest LabLink@31214 11:24 08-May-2008

Report of Analysis

Client Sample ID:	50WW02-FEB2007		
Lab Sample ID:	T16445-6	**Date Sampled:**	02/23/07
Matrix:	AQ - Ground Water	**Date Received:**	02/24/07
Method:	SW846 8260B	**Percent Solids:**	n/a
Project:	Longhorn Army Ammunition Plant		

	File ID	DF	Analyzed	By	Prep Date	Prep Batch	Analytical Batch
Run #1	F0079194.D	1	03/07/07	LJ	n/a	n/a	VF2315
Run #2	F0079234.D	100	03/08/07	LJ	n/a	n/a	VF2318

	Purge Volume
Run #1	5.0 ml
Run #2	5.0 ml

VOA TCL List

CAS No.	Compound	Result	RL	MDL	Units	Q
67-64-1	Acetone	2.8 U	50	2.8	ug/l	
71-43-2	Benzene	0.46	2.0	0.23	ug/l	J
75-27-4	Bromodichloromethane	0.33 U	2.0	0.33	ug/l	
75-25-2	Bromoform	0.65 U	2.0	0.65	ug/l	
108-90-7	Chlorobenzene	0.54 U	2.0	0.54	ug/l	
75-00-3	Chloroethane	0.46 U	2.0	0.46	ug/l	
67-66-3	Chloroform	4.2	2.0	0.66	ug/l	
75-15-0	Carbon disulfide	0.62 U	2.0	0.62	ug/l	
56-23-5	Carbon tetrachloride	0.52 U	2.0	0.52	ug/l	
75-34-3	1,1-Dichloroethane	5.4	2.0	0.52	ug/l	
75-35-4	1,1-Dichloroethylene	6.5	2.0	0.68	ug/l	
107-06-2	1,2-Dichloroethane	18.8	2.0	0.53	ug/l	
78-87-5	1,2-Dichloropropane	0.59 U	2.0	0.59	ug/l	
124-48-1	Dibromochloromethane	0.68 U	2.0	0.68	ug/l	
156-59-2	cis-1,2-Dichloroethylene	855 [a]	200	83	ug/l	
10061-01-5	cis-1,3-Dichloropropene	0.59 U	2.0	0.59	ug/l	
156-60-5	trans-1,2-Dichloroethylene	2.6	2.0	0.75	ug/l	
10061-02-6	trans-1,3-Dichloropropene	0.61 U	2.0	0.61	ug/l	
100-41-4	Ethylbenzene	0.48 U	2.0	0.48	ug/l	
591-78-6	2-Hexanone	1.9 U	10	1.9	ug/l	
108-10-1	4-Methyl-2-pentanone	7.3 U	10	7.3	ug/l	
74-83-9	Methyl bromide	0.47 U	2.0	0.47	ug/l	
74-87-3	Methyl chloride	0.60 U	2.0	0.60	ug/l	
75-09-2	Methylene chloride	0.67 U	5.0	0.67	ug/l	
78-93-3	Methyl ethyl ketone	3.0 U	10	3.0	ug/l	
100-42-5	Styrene	0.50 U	2.0	0.50	ug/l	
71-55-6	1,1,1-Trichloroethane	0.37 U	2.0	0.37	ug/l	
79-34-5	1,1,2,2-Tetrachloroethane	0.46 U	2.0	0.46	ug/l	
79-00-5	1,1,2-Trichloroethane	0.92	2.0	0.66	ug/l	J
127-18-4	Tetrachloroethylene	9.3	2.0	0.74	ug/l	
108-88-3	Toluene	0.54 U	2.0	0.54	ug/l	
79-01-6	Trichloroethylene	5420 [a]	200	63	ug/l	

U = Not detected MDL - Method Detection Limit
RL = Reporting Limit
E = Indicates value exceeds calibration range
J = Indicates an estimated value
B = Indicates analyte found in associated method blank
N = Indicates presumptive evidence of a compound

Report of Analysis

Client Sample ID:	50WW02-FEB2007		
Lab Sample ID:	T16445-6	**Date Sampled:**	02/23/07
Matrix:	AQ - Ground Water	**Date Received:**	02/24/07
Method:	SW846 8260B	**Percent Solids:**	n/a
Project:	Longhorn Army Ammunition Plant		

VOA TCL List

CAS No.	Compound	Result	RL	MDL	Units	Q
75-01-4	Vinyl chloride	15.2	2.0	0.32	ug/l	
1330-20-7	Xylene (total)	1.1 U	6.0	1.1	ug/l	

CAS No.	Surrogate Recoveries	Run# 1	Run# 2	Limits
1868-53-7	Dibromofluoromethane	108%	103%	73-139%
17060-07-0	1,2-Dichloroethane-D4	109%	98%	66-139%
2037-26-5	Toluene-D8	109%	105%	77-148%
460-00-4	4-Bromofluorobenzene	133%	115%	84-150%

(a) Result is from Run# 2

U = Not detected MDL - Method Detection Limit
RL = Reporting Limit
E = Indicates value exceeds calibration range
J = Indicates an estimated value
B = Indicates analyte found in associated method blank
N = Indicates presumptive evidence of a compound

Accutest LabLink@31214 11:24 08-May-2008

Report of Analysis

Client Sample ID:	50WW02-FEB2007		
Lab Sample ID:	T16445-6	**Date Sampled:**	02/23/07
Matrix:	AQ - Ground Water	**Date Received:**	02/24/07
Method:	RSKSOP-147/175	**Percent Solids:**	n/a
Project:	Longhorn Army Ammunition Plant		

	File ID	DF	Analyzed	By	Prep Date	Prep Batch	Analytical Batch
Run #1 [a]	XY025260.D	1	03/01/07	AFL	n/a	n/a	F:GXY992
Run #2							

CAS No.	Compound	Result	RL	MDL	Units	Q
74-82-8	Methane	1.87	0.50	0.30	ug/l	
74-84-0	Ethane	0.60 U	1.0	0.60	ug/l	
74-85-1	Ethene	0.80 U	1.0	0.80	ug/l	

(a) Analysis performed at Accutest Laboratories, Orlando, FL.

U = Not detected MDL - Method Detection Limit
RL = Reporting Limit
E = Indicates value exceeds calibration range
J = Indicates an estimated value
B = Indicates analyte found in associated method blank
N = Indicates presumptive evidence of a compound

Accutest LabLink@31214 11:24 08-May-2008

Report of Analysis

Client Sample ID:	50WW02-FEB2007		
Lab Sample ID:	T16445-6	**Date Sampled:**	02/23/07
Matrix:	AQ - Ground Water	**Date Received:**	02/24/07
		Percent Solids:	n/a
Project:	Longhorn Army Ammunition Plant		

General Chemistry

Analyte	Result	RL	MDL	Units	DF	Analyzed	By	Method
Perchlorate by IC								
Perchlorate [a]	532	10	4.0	ug/l	1	03/02/07 17:12	AFL	EPA 314
Alkalinity, Total as CaCO3	138	5.0	0.30	mg/l	1	03/08/07 12:50	EB	EPA 310.1
Carbon Dioxide	140	5.0		mg/l	1	03/12/07	RM	SM18 4500CO2D
Chloride	219	10	0.57	mg/l	10	03/05/07 12:15	EB	EPA 325.3
Nitrogen, Nitrate [b]	< 0.10	0.10	0.0050	mg/l	1	02/26/07 09:23	LN	SM18 4500NO3E/NO2B
Nitrogen, Nitrate + Nitrite	0.020 B	0.050	0.0050	mg/l	1	02/26/07 09:23	LN	EPA 353.2
Nitrogen, Nitrite	0.0030 U	0.050	0.0030	mg/l	1	02/24/07 14:28	LN	EPA 353.2
Specific Conductivity [c]	1400	0.50	0.50	umhos/cm	1	03/06/07	AFL	EPA 120.1
Sulfate	198	20	2.6	mg/l	2	03/06/07 18:00	EB	EPA 375.3
Sulfide	0.0 B	0.20		mg/l	1	03/01/07 12:10	LN	EPA 376.1
Total Organic Carbon	3.0	1.0	0.092	mg/l	1	02/27/07 15:10	LN	EPA 415.1/9060
pH	6.3			su	1	03/01/07 13:00	TW	EPA 150.1/9040

(a) Estimated value, above calibration range. Analysis performed at Accutest Laboratories, Orlando, FL.
(b) Calculated as: (Nitrogen, Nitrate + Nitrite) - (Nitrogen, Nitrite)
(c) Analysis performed at Accutest Laboratories, Orlando, FL.

RL = Reporting Limit
MDL = Method Detection Limit
U = Indicates a result < MDL
B = Indicates a result > = MDL but < RL

Accutest LabLink@31214 11:24 08-May-2008

Report of Analysis

Client Sample ID:	17WW16-FEB2007		
Lab Sample ID:	T16445-7	**Date Sampled:**	02/22/07
Matrix:	AQ - Ground Water	**Date Received:**	02/24/07
Method:	SW846 8260B	**Percent Solids:**	n/a
Project:	Longhorn Army Ammunition Plant		

	File ID	DF	Analyzed	By	Prep Date	Prep Batch	Analytical Batch
Run #1	F0079229.D	1	03/08/07	LJ	n/a	n/a	VF2318
Run #2							

	Purge Volume
Run #1	5.0 ml
Run #2	

VOA TCL List

CAS No.	Compound	Result	RL	MDL	Units	Q
67-64-1	Acetone	5.6	50	2.8	ug/l	J
71-43-2	Benzene	0.23 U	2.0	0.23	ug/l	
75-27-4	Bromodichloromethane	0.33 U	2.0	0.33	ug/l	
75-25-2	Bromoform	0.65 U	2.0	0.65	ug/l	
108-90-7	Chlorobenzene	0.54 U	2.0	0.54	ug/l	
75-00-3	Chloroethane	0.46 U	2.0	0.46	ug/l	
67-66-3	Chloroform	0.66 U	2.0	0.66	ug/l	
75-15-0	Carbon disulfide	0.62 U	2.0	0.62	ug/l	
56-23-5	Carbon tetrachloride	0.52 U	2.0	0.52	ug/l	
75-34-3	1,1-Dichloroethane	0.52 U	2.0	0.52	ug/l	
75-35-4	1,1-Dichloroethylene	0.68 U	2.0	0.68	ug/l	
107-06-2	1,2-Dichloroethane	0.53 U	2.0	0.53	ug/l	
78-87-5	1,2-Dichloropropane	0.59 U	2.0	0.59	ug/l	
124-48-1	Dibromochloromethane	0.68 U	2.0	0.68	ug/l	
156-59-2	cis-1,2-Dichloroethylene	0.83 U	2.0	0.83	ug/l	
10061-01-5	cis-1,3-Dichloropropene	0.59 U	2.0	0.59	ug/l	
156-60-5	trans-1,2-Dichloroethylene	0.75 U	2.0	0.75	ug/l	
10061-02-6	trans-1,3-Dichloropropene	0.61 U	2.0	0.61	ug/l	
100-41-4	Ethylbenzene	0.48 U	2.0	0.48	ug/l	
591-78-6	2-Hexanone	1.9 U	10	1.9	ug/l	
108-10-1	4-Methyl-2-pentanone	7.3 U	10	7.3	ug/l	
74-83-9	Methyl bromide	0.47 U	2.0	0.47	ug/l	
74-87-3	Methyl chloride	0.60 U	2.0	0.60	ug/l	
75-09-2	Methylene chloride	0.67 U	5.0	0.67	ug/l	
78-93-3	Methyl ethyl ketone	3.0 U	10	3.0	ug/l	
100-42-5	Styrene	0.50 U	2.0	0.50	ug/l	
71-55-6	1,1,1-Trichloroethane	0.37 U	2.0	0.37	ug/l	
79-34-5	1,1,2,2-Tetrachloroethane	0.46 U	2.0	0.46	ug/l	
79-00-5	1,1,2-Trichloroethane	0.66 U	2.0	0.66	ug/l	
127-18-4	Tetrachloroethylene	0.74 U	2.0	0.74	ug/l	
108-88-3	Toluene	0.54 U	2.0	0.54	ug/l	
79-01-6	Trichloroethylene	0.63 U	2.0	0.63	ug/l	

U = Not detected MDL - Method Detection Limit
RL = Reporting Limit
E = Indicates value exceeds calibration range
J = Indicates an estimated value
B = Indicates analyte found in associated method blank
N = Indicates presumptive evidence of a compound

Accutest LabLink@31214 11:24 08-May-2008

Report of Analysis

Client Sample ID:	17WW16-FEB2007		
Lab Sample ID:	T16445-7	**Date Sampled:**	02/22/07
Matrix:	AQ - Ground Water	**Date Received:**	02/24/07
Method:	SW846 8260B	**Percent Solids:**	n/a
Project:	Longhorn Army Ammunition Plant		

VOA TCL List

CAS No.	Compound	Result	RL	MDL	Units	Q
75-01-4	Vinyl chloride	0.32 U	2.0	0.32	ug/l	
1330-20-7	Xylene (total)	1.1 U	6.0	1.1	ug/l	

CAS No.	Surrogate Recoveries	Run# 1	Run# 2	Limits
1868-53-7	Dibromofluoromethane	104%		73-139%
17060-07-0	1,2-Dichloroethane-D4	94%		66-139%
2037-26-5	Toluene-D8	104%		77-148%
460-00-4	4-Bromofluorobenzene	106%		84-150%

U = Not detected MDL - Method Detection Limit
RL = Reporting Limit
E = Indicates value exceeds calibration range
J = Indicates an estimated value
B = Indicates analyte found in associated method blank
N = Indicates presumptive evidence of a compound

Accutest LabLink@31214 11:24 08-May-2008

Report of Analysis

Client Sample ID:	17WW16-FEB2007		
Lab Sample ID:	T16445-7	**Date Sampled:**	02/22/07
Matrix:	AQ - Ground Water	**Date Received:**	02/24/07
Method:	RSKSOP-147/175	**Percent Solids:**	n/a
Project:	Longhorn Army Ammunition Plant		

	File ID	DF	Analyzed	By	Prep Date	Prep Batch	Analytical Batch
Run #1 [a]	XY025261.D	1	03/01/07	AFL	n/a	n/a	F:GXY992
Run #2							

CAS No.	Compound	Result	RL	MDL	Units	Q
74-82-8	Methane	804	0.50	0.30	ug/l	
74-84-0	Ethane	1.7	1.0	0.60	ug/l	
74-85-1	Ethene	2.1	1.0	0.80	ug/l	

(a) Analysis performed at Accutest Laboratories, Orlando, FL.

U = Not detected MDL - Method Detection Limit
RL = Reporting Limit
E = Indicates value exceeds calibration range
J = Indicates an estimated value
B = Indicates analyte found in associated method blank
N = Indicates presumptive evidence of a compound

Accutest LabLink@31214 11:24 08-May-2008

Report of Analysis

Client Sample ID:	17WW16-FEB2007		
Lab Sample ID:	T16445-7	**Date Sampled:**	02/22/07
Matrix:	AQ - Ground Water	**Date Received:**	02/24/07
Method:	SW846 8330A SW846 3535A	**Percent Solids:**	n/a
Project:	Longhorn Army Ammunition Plant		

	File ID	DF	Analyzed	By	Prep Date	Prep Batch	Analytical Batch
Run #1 [a]	GG020215.D	1	03/02/07	AFL	03/01/07	F:OP19677	F:GGG906
Run #2							

	Initial Volume	Final Volume
Run #1	1000 ml	10.0 ml
Run #2		

CAS No.	Compound	Result	RL	MDL	Units	Q
2691-41-0	HMX	0.060 U	0.20	0.060	ug/l	
121-82-4	RDX	0.075 U	0.20	0.075	ug/l	
99-65-0	1,3-Dinitrobenzene	0.070 U	0.20	0.070	ug/l	
606-20-2	2,6-Dinitrotoluene	0.065 U	0.20	0.065	ug/l	
121-14-2	2,4-Dinitrotoluene	0.075 U	0.20	0.075	ug/l	
35572-78-2	2-amino-4,6-Dinitrotoluene	0.070 U	0.20	0.070	ug/l	
19406-51-0	4-amino-2,6-Dinitrotoluene	0.080 U	0.20	0.080	ug/l	
98-95-3	Nitrobenzene	0.060 U	0.20	0.060	ug/l	
88-72-2	o-Nitrotoluene	0.060 U	0.20	0.060	ug/l	
99-08-1	m-Nitrotoluene	0.075 U	0.20	0.075	ug/l	
99-99-0	p-Nitrotoluene	0.075 U	0.20	0.075	ug/l	
479-45-8	Tetryl	0.075 U	0.20	0.075	ug/l	
99-35-4	1,3,5-Trinitrobenzene	0.095 U	0.20	0.095	ug/l	
118-96-7	2,4,6-Trinitrotoluene	0.080 U	0.20	0.080	ug/l	

CAS No.	Surrogate Recoveries	Run# 1	Run# 2	Limits
610-39-9	3,4-Dinitrotoluene	109%		70-136%

(a) Analysis performed at Accutest Laboratories, Orlando, FL.

U = Not detected MDL - Method Detection Limit
RL = Reporting Limit
E = Indicates value exceeds calibration range
J = Indicates an estimated value
B = Indicates analyte found in associated method blank
N = Indicates presumptive evidence of a compound

Accutest LabLink@31214 11:24 08-May-2008

Report of Analysis

Client Sample ID:	17WW16-FEB2007		
Lab Sample ID:	T16445-7	**Date Sampled:**	02/22/07
Matrix:	AQ - Ground Water	**Date Received:**	02/24/07
		Percent Solids:	n/a
Project:	Longhorn Army Ammunition Plant		

General Chemistry

Analyte	Result	RL	MDL	Units	DF	Analyzed	By	Method
Perchlorate by IC								
Perchlorate [a]	4.0 U	10	4.0	ug/l	1	03/02/07 17:55	AFL	EPA 314
Alkalinity, Total as CaCO3	457	25	0.30	mg/l	5	03/08/07 12:50	EB	EPA 310.1
Carbon Dioxide	0.0 B	5.0		mg/l	1	03/12/07	RM	SM18 4500CO2D
Chloride	216	10	0.57	mg/l	10	03/05/07 12:15	EB	EPA 325.3
Nitrogen, Nitrate [b]	0.30	0.10	0.0050	mg/l	1	02/26/07 09:23	LN	SM18 4500NO3E/NO2B
Nitrogen, Nitrate + Nitrite	0.30	0.050	0.0050	mg/l	1	02/26/07 09:23	LN	EPA 353.2
Nitrogen, Nitrite	0.0030 U	0.050	0.0030	mg/l	1	02/24/07 14:28	LN	EPA 353.2
Specific Conductivity [a]	1700	0.50	0.50	umhos/cm	1	03/06/07	AFL	EPA 120.1
Sulfate	44.0	20	2.6	mg/l	2	03/06/07 18:00	EB	EPA 375.3
Sulfide	0.0 B	0.20		mg/l	1	03/01/07 12:10	LN	EPA 376.1
Total Organic Carbon	14.0	1.0	0.092	mg/l	1	02/27/07 15:10	LN	EPA 415.1/9060
pH	11.2			su	1	03/01/07 13:00	TW	EPA 150.1/9040

(a) Analysis performed at Accutest Laboratories, Orlando, FL.
(b) Calculated as: (Nitrogen, Nitrate + Nitrite) - (Nitrogen, Nitrite)

RL = Reporting Limit
MDL = Method Detection Limit
U = Indicates a result < MDL
B = Indicates a result > = MDL but < RL

Accutest LabLink@31214 11:24 08-May-2008

Report of Analysis

Client Sample ID:	17WW02-FEB2007		
Lab Sample ID:	T16445-8	**Date Sampled:**	02/22/07
Matrix:	AQ - Ground Water	**Date Received:**	02/24/07
Method:	SW846 8260B	**Percent Solids:**	n/a
Project:	Longhorn Army Ammunition Plant		

	File ID	DF	Analyzed	By	Prep Date	Prep Batch	Analytical Batch
Run #1	F0079196.D	1	03/07/07	LJ	n/a	n/a	VF2315
Run #2	F0079235.D	5	03/08/07	LJ	n/a	n/a	VF2318

	Purge Volume
Run #1	5.0 ml
Run #2	5.0 ml

VOA TCL List

CAS No.	Compound	Result	RL	MDL	Units	Q
67-64-1	Acetone	2.8 U	50	2.8	ug/l	
71-43-2	Benzene	0.23 U	2.0	0.23	ug/l	
75-27-4	Bromodichloromethane	0.33 U	2.0	0.33	ug/l	
75-25-2	Bromoform	0.65 U	2.0	0.65	ug/l	
108-90-7	Chlorobenzene	0.54 U	2.0	0.54	ug/l	
75-00-3	Chloroethane	0.46 U	2.0	0.46	ug/l	
67-66-3	Chloroform	0.66 U	2.0	0.66	ug/l	
75-15-0	Carbon disulfide	0.62 U	2.0	0.62	ug/l	
56-23-5	Carbon tetrachloride	0.52 U	2.0	0.52	ug/l	
75-34-3	1,1-Dichloroethane	0.52 U	2.0	0.52	ug/l	
75-35-4	1,1-Dichloroethylene	5.3	2.0	0.68	ug/l	
107-06-2	1,2-Dichloroethane	40.7	2.0	0.53	ug/l	
78-87-5	1,2-Dichloropropane	0.59 U	2.0	0.59	ug/l	
124-48-1	Dibromochloromethane	0.68 U	2.0	0.68	ug/l	
156-59-2	cis-1,2-Dichloroethylene	4.5	2.0	0.83	ug/l	
10061-01-5	cis-1,3-Dichloropropene	0.59 U	2.0	0.59	ug/l	
156-60-5	trans-1,2-Dichloroethylene	0.85	2.0	0.75	ug/l	J
10061-02-6	trans-1,3-Dichloropropene	0.61 U	2.0	0.61	ug/l	
100-41-4	Ethylbenzene	0.48 U	2.0	0.48	ug/l	
591-78-6	2-Hexanone	1.9 U	10	1.9	ug/l	
108-10-1	4-Methyl-2-pentanone	7.3 U	10	7.3	ug/l	
74-83-9	Methyl bromide	0.47 U	2.0	0.47	ug/l	
74-87-3	Methyl chloride	0.60 U	2.0	0.60	ug/l	
75-09-2	Methylene chloride	0.67 U	5.0	0.67	ug/l	
78-93-3	Methyl ethyl ketone	3.0 U	10	3.0	ug/l	
100-42-5	Styrene	0.50 U	2.0	0.50	ug/l	
71-55-6	1,1,1-Trichloroethane	0.37 U	2.0	0.37	ug/l	
79-34-5	1,1,2,2-Tetrachloroethane	0.46 U	2.0	0.46	ug/l	
79-00-5	1,1,2-Trichloroethane	0.66 U	2.0	0.66	ug/l	
127-18-4	Tetrachloroethylene	0.74 U	2.0	0.74	ug/l	
108-88-3	Toluene	0.54 U	2.0	0.54	ug/l	
79-01-6	Trichloroethylene	479 [a]	10	3.2	ug/l	

U = Not detected MDL - Method Detection Limit
RL = Reporting Limit
E = Indicates value exceeds calibration range
J = Indicates an estimated value
B = Indicates analyte found in associated method blank
N = Indicates presumptive evidence of a compound

Report of Analysis

Client Sample ID:	17WW02-FEB2007		
Lab Sample ID:	T16445-8	**Date Sampled:**	02/22/07
Matrix:	AQ - Ground Water	**Date Received:**	02/24/07
Method:	SW846 8260B	**Percent Solids:**	n/a
Project:	Longhorn Army Ammunition Plant		

VOA TCL List

CAS No.	Compound	Result	RL	MDL	Units	Q
75-01-4	Vinyl chloride	0.32 U	2.0	0.32	ug/l	
1330-20-7	Xylene (total)	1.1 U	6.0	1.1	ug/l	

CAS No.	Surrogate Recoveries	Run# 1	Run# 2	Limits
1868-53-7	Dibromofluoromethane	102%	105%	73-139%
17060-07-0	1,2-Dichloroethane-D4	100%	103%	66-139%
2037-26-5	Toluene-D8	106%	107%	77-148%
460-00-4	4-Bromofluorobenzene	113%	118%	84-150%

(a) Result is from Run# 2

U = Not detected MDL - Method Detection Limit
RL = Reporting Limit
E = Indicates value exceeds calibration range
J = Indicates an estimated value
B = Indicates analyte found in associated method blank
N = Indicates presumptive evidence of a compound

Accutest LabLink@31214 11:24 08-May-2008

Report of Analysis

Client Sample ID:	17WW02-FEB2007		
Lab Sample ID:	T16445-8	**Date Sampled:**	02/22/07
Matrix:	AQ - Ground Water	**Date Received:**	02/24/07
Method:	RSKSOP-147/175	**Percent Solids:**	n/a
Project:	Longhorn Army Ammunition Plant		

	File ID	DF	Analyzed	By	Prep Date	Prep Batch	Analytical Batch
Run #1 [a]	XY025264.D	1	03/01/07	AFL	n/a	n/a	F:GXY992
Run #2							

CAS No.	Compound	Result	RL	MDL	Units	Q
74-82-8	Methane	7.48	0.50	0.30	ug/l	
74-84-0	Ethane	0.60 U	1.0	0.60	ug/l	
74-85-1	Ethene	0.80 U	1.0	0.80	ug/l	

(a) Analysis performed at Accutest Laboratories, Orlando, FL.

U = Not detected MDL - Method Detection Limit
RL = Reporting Limit
E = Indicates value exceeds calibration range
J = Indicates an estimated value
B = Indicates analyte found in associated method blank
N = Indicates presumptive evidence of a compound

Accutest LabLink@31214 11:24 08-May-2008

Report of Analysis

Client Sample ID:	17WW02-FEB2007		
Lab Sample ID:	T16445-8	**Date Sampled:**	02/22/07
Matrix:	AQ - Ground Water	**Date Received:**	02/24/07
Method:	SW846 8330A SW846 3535A	**Percent Solids:**	n/a
Project:	Longhorn Army Ammunition Plant		

	File ID	DF	Analyzed	By	Prep Date	Prep Batch	Analytical Batch
Run #1 [a]	GG020216.D	1	03/02/07	AFL	03/01/07	F:OP19677	F:GGG906
Run #2							

	Initial Volume	Final Volume
Run #1	1000 ml	10.0 ml
Run #2		

CAS No.	Compound	Result	RL	MDL	Units	Q
2691-41-0	HMX	0.060 U	0.20	0.060	ug/l	
121-82-4	RDX	0.075 U	0.20	0.075	ug/l	
99-65-0	1,3-Dinitrobenzene	0.070 U	0.20	0.070	ug/l	
606-20-2	2,6-Dinitrotoluene	0.065 U	0.20	0.065	ug/l	
121-14-2	2,4-Dinitrotoluene	0.075 U	0.20	0.075	ug/l	
35572-78-2	2-amino-4,6-Dinitrotoluene	0.070 U	0.20	0.070	ug/l	
19406-51-0	4-amino-2,6-Dinitrotoluene	0.080 U	0.20	0.080	ug/l	
98-95-3	Nitrobenzene	0.060 U	0.20	0.060	ug/l	
88-72-2	o-Nitrotoluene	0.060 U	0.20	0.060	ug/l	
99-08-1	m-Nitrotoluene	0.075 U	0.20	0.075	ug/l	
99-99-0	p-Nitrotoluene	0.075 U	0.20	0.075	ug/l	
479-45-8	Tetryl	0.075 U	0.20	0.075	ug/l	
99-35-4	1,3,5-Trinitrobenzene	0.095 U	0.20	0.095	ug/l	
118-96-7	2,4,6-Trinitrotoluene	0.080 U	0.20	0.080	ug/l	

CAS No.	Surrogate Recoveries	Run# 1	Run# 2	Limits
610-39-9	3,4-Dinitrotoluene	107%		70-136%

(a) Analysis performed at Accutest Laboratories, Orlando, FL.

U = Not detected MDL - Method Detection Limit
RL = Reporting Limit
E = Indicates value exceeds calibration range
J = Indicates an estimated value
B = Indicates analyte found in associated method blank
N = Indicates presumptive evidence of a compound

Accutest LabLink@31214 11:24 08-May-2008

Report of Analysis

Client Sample ID:	17WW02-FEB2007		
Lab Sample ID:	T16445-8	**Date Sampled:**	02/22/07
Matrix:	AQ - Ground Water	**Date Received:**	02/24/07
		Percent Solids:	n/a
Project:	Longhorn Army Ammunition Plant		

General Chemistry

Analyte	Result	RL	MDL	Units	DF	Analyzed	By	Method
Perchlorate by IC								
Perchlorate [a]	4.0 U	10	4.0	ug/l	1	03/02/07 18:10	AFL	EPA 314
Alkalinity, Total as CaCO3	347	25	0.30	mg/l	5	03/08/07 12:50	EB	EPA 310.1
Carbon Dioxide	110	5.0		mg/l	1	03/12/07	RM	SM18 4500CO2D
Chloride	994	50	0.57	mg/l	50	03/05/07 12:15	EB	EPA 325.3
Nitrogen, Nitrate [b]	< 0.10	0.10	0.0050	mg/l	1	02/26/07 09:23	LN	SM18 4500NO3E/NO2B
Nitrogen, Nitrate + Nitrite	0.060	0.050	0.0050	mg/l	1	02/26/07 09:23	LN	EPA 353.2
Nitrogen, Nitrite	0.0030 U	0.050	0.0030	mg/l	1	02/24/07 14:28	LN	EPA 353.2
Specific Conductivity [a]	3450	0.50	0.50	umhos/cm	1	03/06/07	AFL	EPA 120.1
Sulfate	123	40	2.6	mg/l	4	03/06/07 18:00	EB	EPA 375.3
Sulfide	0.0 B	0.20		mg/l	1	03/01/07 12:10	LN	EPA 376.1
Total Organic Carbon	3.0	1.0	0.092	mg/l	1	02/28/07 09:08	LN	EPA 415.1/9060
pH	6.8			su	1	03/01/07 13:00	TW	EPA 150.1/9040

(a) Analysis performed at Accutest Laboratories, Orlando, FL.
(b) Calculated as: (Nitrogen, Nitrate + Nitrite) - (Nitrogen, Nitrite)

RL = Reporting Limit
MDL = Method Detection Limit

U = Indicates a result < MDL
B = Indicates a result > = MDL but < RL

Accutest LabLink@31214 11:24 08-May-2008

Report of Analysis

Client Sample ID:	17WW02-FEB2007 FD		
Lab Sample ID:	T16445-9	**Date Sampled:**	02/22/07
Matrix:	AQ - Ground Water	**Date Received:**	02/24/07
Method:	SW846 8260B	**Percent Solids:**	n/a
Project:	Longhorn Army Ammunition Plant		

	File ID	DF	Analyzed	By	Prep Date	Prep Batch	Analytical Batch
Run #1	F0079197.D	1	03/07/07	LJ	n/a	n/a	VF2315
Run #2	F0079236.D	5	03/08/07	LJ	n/a	n/a	VF2318

	Purge Volume
Run #1	5.0 ml
Run #2	5.0 ml

VOA TCL List

CAS No.	Compound	Result	RL	MDL	Units	Q
67-64-1	Acetone	2.8 U	50	2.8	ug/l	
71-43-2	Benzene	0.23 U	2.0	0.23	ug/l	
75-27-4	Bromodichloromethane	0.33 U	2.0	0.33	ug/l	
75-25-2	Bromoform	0.65 U	2.0	0.65	ug/l	
108-90-7	Chlorobenzene	0.54 U	2.0	0.54	ug/l	
75-00-3	Chloroethane	0.46 U	2.0	0.46	ug/l	
67-66-3	Chloroform	0.66 U	2.0	0.66	ug/l	
75-15-0	Carbon disulfide	0.62 U	2.0	0.62	ug/l	
56-23-5	Carbon tetrachloride	0.52 U	2.0	0.52	ug/l	
75-34-3	1,1-Dichloroethane	0.52 U	2.0	0.52	ug/l	
75-35-4	1,1-Dichloroethylene	5.2	2.0	0.68	ug/l	
107-06-2	1,2-Dichloroethane	42.1	2.0	0.53	ug/l	
78-87-5	1,2-Dichloropropane	0.59 U	2.0	0.59	ug/l	
124-48-1	Dibromochloromethane	0.68 U	2.0	0.68	ug/l	
156-59-2	cis-1,2-Dichloroethylene	4.2	2.0	0.83	ug/l	
10061-01-5	cis-1,3-Dichloropropene	0.59 U	2.0	0.59	ug/l	
156-60-5	trans-1,2-Dichloroethylene	0.88	2.0	0.75	ug/l	J
10061-02-6	trans-1,3-Dichloropropene	0.61 U	2.0	0.61	ug/l	
100-41-4	Ethylbenzene	0.48 U	2.0	0.48	ug/l	
591-78-6	2-Hexanone	1.9 U	10	1.9	ug/l	
108-10-1	4-Methyl-2-pentanone	7.3 U	10	7.3	ug/l	
74-83-9	Methyl bromide	0.47 U	2.0	0.47	ug/l	
74-87-3	Methyl chloride	0.60 U	2.0	0.60	ug/l	
75-09-2	Methylene chloride	0.67 U	5.0	0.67	ug/l	
78-93-3	Methyl ethyl ketone	3.0 U	10	3.0	ug/l	
100-42-5	Styrene	0.50 U	2.0	0.50	ug/l	
71-55-6	1,1,1-Trichloroethane	0.37 U	2.0	0.37	ug/l	
79-34-5	1,1,2,2-Tetrachloroethane	0.46 U	2.0	0.46	ug/l	
79-00-5	1,1,2-Trichloroethane	0.66 U	2.0	0.66	ug/l	
127-18-4	Tetrachloroethylene	0.74 U	2.0	0.74	ug/l	
108-88-3	Toluene	0.54 U	2.0	0.54	ug/l	
79-01-6	Trichloroethylene	468 [a]	10	3.2	ug/l	

U = Not detected MDL - Method Detection Limit
RL = Reporting Limit
E = Indicates value exceeds calibration range
J = Indicates an estimated value
B = Indicates analyte found in associated method blank
N = Indicates presumptive evidence of a compound

Report of Analysis

Client Sample ID:	17WW02-FEB2007 FD		
Lab Sample ID:	T16445-9	**Date Sampled:**	02/22/07
Matrix:	AQ - Ground Water	**Date Received:**	02/24/07
Method:	SW846 8260B	**Percent Solids:**	n/a
Project:	Longhorn Army Ammunition Plant		

VOA TCL List

CAS No.	Compound	Result	RL	MDL	Units	Q
75-01-4	Vinyl chloride	0.32 U	2.0	0.32	ug/l	
1330-20-7	Xylene (total)	1.1 U	6.0	1.1	ug/l	

CAS No.	Surrogate Recoveries	Run# 1	Run# 2	Limits
1868-53-7	Dibromofluoromethane	107%	105%	73-139%
17060-07-0	1,2-Dichloroethane-D4	104%	101%	66-139%
2037-26-5	Toluene-D8	109%	107%	77-148%
460-00-4	4-Bromofluorobenzene	117%	117%	84-150%

(a) Result is from Run# 2

U = Not detected MDL - Method Detection Limit
RL = Reporting Limit
E = Indicates value exceeds calibration range
J = Indicates an estimated value
B = Indicates analyte found in associated method blank
N = Indicates presumptive evidence of a compound

Accutest LabLink@31214 11:24 08-May-2008

Report of Analysis

Client Sample ID:	17WW02-FEB2007 FD		
Lab Sample ID:	T16445-9	**Date Sampled:**	02/22/07
Matrix:	AQ - Ground Water	**Date Received:**	02/24/07
Method:	RSKSOP-147/175	**Percent Solids:**	n/a
Project:	Longhorn Army Ammunition Plant		

	File ID	DF	Analyzed	By	Prep Date	Prep Batch	Analytical Batch
Run #1 [a]	XY025265.D	1	03/01/07	AFL	n/a	n/a	F:GXY992
Run #2							

CAS No.	Compound	Result	RL	MDL	Units	Q
74-82-8	Methane	5.95	0.50	0.30	ug/l	
74-84-0	Ethane	0.60 U	1.0	0.60	ug/l	
74-85-1	Ethene	0.80 U	1.0	0.80	ug/l	

(a) Analysis performed at Accutest Laboratories, Orlando, FL.

U = Not detected MDL - Method Detection Limit
RL = Reporting Limit
E = Indicates value exceeds calibration range
J = Indicates an estimated value
B = Indicates analyte found in associated method blank
N = Indicates presumptive evidence of a compound

Accutest LabLink@31214 11:24 08-May-2008

Report of Analysis

Client Sample ID:	17WW02-FEB2007 FD		
Lab Sample ID:	T16445-9	**Date Sampled:**	02/22/07
Matrix:	AQ - Ground Water	**Date Received:**	02/24/07
		Percent Solids:	n/a
Project:	Longhorn Army Ammunition Plant		

General Chemistry

Analyte	Result	RL	MDL	Units	DF	Analyzed	By	Method
Perchlorate by IC								
Perchlorate [a]	4.0 U	10	4.0	ug/l	1	03/02/07 18:24	AFL	EPA 314
Alkalinity, Total as CaCO3	336	25	0.30	mg/l	5	03/08/07 12:50	EB	EPA 310.1
Carbon Dioxide	110	5.0		mg/l	1	03/12/07	RM	SM18 4500CO2D
Chloride	969	50	0.57	mg/l	50	03/05/07 12:15	EB	EPA 325.3
Nitrogen, Nitrate [b]	< 0.10	0.10	0.0050	mg/l	1	02/26/07 09:23	LN	SM18 4500NO3E/NO2B
Nitrogen, Nitrate + Nitrite	0.050	0.050	0.0050	mg/l	1	02/26/07 09:23	LN	EPA 353.2
Nitrogen, Nitrite	0.0030 U	0.050	0.0030	mg/l	1	02/24/07 14:28	LN	EPA 353.2
Specific Conductivity [a]	3540	0.50	0.50	umhos/cm	1	03/06/07	AFL	EPA 120.1
Sulfate	130	40	2.6	mg/l	4	03/06/07 18:00	EB	EPA 375.3
Sulfide	0.0 B	0.20		mg/l	1	03/01/07 12:10	LN	EPA 376.1
Total Organic Carbon	3.0	1.0	0.092	mg/l	1	02/28/07 09:08	LN	EPA 415.1/9060
pH	6.8			su	1	03/01/07 13:00	TW	EPA 150.1/9040

(a) Analysis performed at Accutest Laboratories, Orlando, FL.
(b) Calculated as: (Nitrogen, Nitrate + Nitrite) - (Nitrogen, Nitrite)

RL = Reporting Limit
MDL = Method Detection Limit

U = Indicates a result < MDL
B = Indicates a result > = MDL but < RL

Report of Analysis

Client Sample ID:	29WW35-FEB2007		
Lab Sample ID:	T16445-10	**Date Sampled:**	02/22/07
Matrix:	AQ - Ground Water	**Date Received:**	02/24/07
Method:	SW846 8260B	**Percent Solids:**	n/a
Project:	Longhorn Army Ammunition Plant		

	File ID	DF	Analyzed	By	Prep Date	Prep Batch	Analytical Batch
Run #1	F0079198.D	1	03/07/07	LJ	n/a	n/a	VF2315
Run #2	F0079237.D	5	03/08/07	LJ	n/a	n/a	VF2318

	Purge Volume
Run #1	5.0 ml
Run #2	5.0 ml

VOA TCL List

CAS No.	Compound	Result	RL	MDL	Units	Q
67-64-1	Acetone	2.8 U	50	2.8	ug/l	
71-43-2	Benzene	0.23 U	2.0	0.23	ug/l	
75-27-4	Bromodichloromethane	0.33 U	2.0	0.33	ug/l	
75-25-2	Bromoform	0.65 U	2.0	0.65	ug/l	
108-90-7	Chlorobenzene	0.54 U	2.0	0.54	ug/l	
75-00-3	Chloroethane	0.46 U	2.0	0.46	ug/l	
67-66-3	Chloroform	0.66 U	2.0	0.66	ug/l	
75-15-0	Carbon disulfide	3.7	2.0	0.62	ug/l	
56-23-5	Carbon tetrachloride	0.52 U	2.0	0.52	ug/l	
75-34-3	1,1-Dichloroethane	0.52 U	2.0	0.52	ug/l	
75-35-4	1,1-Dichloroethylene	0.68 U	2.0	0.68	ug/l	
107-06-2	1,2-Dichloroethane	0.53 U	2.0	0.53	ug/l	
78-87-5	1,2-Dichloropropane	0.59 U	2.0	0.59	ug/l	
124-48-1	Dibromochloromethane	0.68 U	2.0	0.68	ug/l	
156-59-2	cis-1,2-Dichloroethylene	0.83 U	2.0	0.83	ug/l	
10061-01-5	cis-1,3-Dichloropropene	0.59 U	2.0	0.59	ug/l	
156-60-5	trans-1,2-Dichloroethylene	0.75 U	2.0	0.75	ug/l	
10061-02-6	trans-1,3-Dichloropropene	0.61 U	2.0	0.61	ug/l	
100-41-4	Ethylbenzene	0.48 U	2.0	0.48	ug/l	
591-78-6	2-Hexanone	1.9 U	10	1.9	ug/l	
108-10-1	4-Methyl-2-pentanone	7.3 U	10	7.3	ug/l	
74-83-9	Methyl bromide	0.47 U	2.0	0.47	ug/l	
74-87-3	Methyl chloride	0.60 U	2.0	0.60	ug/l	
75-09-2	Methylene chloride	237 [a]	25	3.4	ug/l	
78-93-3	Methyl ethyl ketone	3.0 U	10	3.0	ug/l	
100-42-5	Styrene	0.50 U	2.0	0.50	ug/l	
71-55-6	1,1,1-Trichloroethane	0.37 U	2.0	0.37	ug/l	
79-34-5	1,1,2,2-Tetrachloroethane	0.46 U	2.0	0.46	ug/l	
79-00-5	1,1,2-Trichloroethane	0.66 U	2.0	0.66	ug/l	
127-18-4	Tetrachloroethylene	0.74 U	2.0	0.74	ug/l	
108-88-3	Toluene	0.54 U	2.0	0.54	ug/l	
79-01-6	Trichloroethylene	25.6	2.0	0.63	ug/l	

U = Not detected MDL - Method Detection Limit
RL = Reporting Limit
E = Indicates value exceeds calibration range
J = Indicates an estimated value
B = Indicates analyte found in associated method blank
N = Indicates presumptive evidence of a compound

Report of Analysis

Client Sample ID:	29WW35-FEB2007		
Lab Sample ID:	T16445-10	**Date Sampled:**	02/22/07
Matrix:	AQ - Ground Water	**Date Received:**	02/24/07
Method:	SW846 8260B	**Percent Solids:**	n/a
Project:	Longhorn Army Ammunition Plant		

VOA TCL List

CAS No.	Compound	Result	RL	MDL	Units	Q
75-01-4	Vinyl chloride	0.32 U	2.0	0.32	ug/l	
1330-20-7	Xylene (total)	1.1 U	6.0	1.1	ug/l	

CAS No.	Surrogate Recoveries	Run# 1	Run# 2	Limits
1868-53-7	Dibromofluoromethane	109%	104%	73-139%
17060-07-0	1,2-Dichloroethane-D4	107%	100%	66-139%
2037-26-5	Toluene-D8	108%	104%	77-148%
460-00-4	4-Bromofluorobenzene	116%	115%	84-150%

(a) Result is from Run# 2

U = Not detected MDL - Method Detection Limit
RL = Reporting Limit
E = Indicates value exceeds calibration range
J = Indicates an estimated value
B = Indicates analyte found in associated method blank
N = Indicates presumptive evidence of a compound

Accutest LabLink@31214 11:24 08-May-2008

Report of Analysis

Client Sample ID:	29WW35-FEB2007		
Lab Sample ID:	T16445-10	**Date Sampled:**	02/22/07
Matrix:	AQ - Ground Water	**Date Received:**	02/24/07
Method:	RSKSOP-147/175	**Percent Solids:**	n/a
Project:	Longhorn Army Ammunition Plant		

	File ID	DF	Analyzed	By	Prep Date	Prep Batch	Analytical Batch
Run #1 [a]	XY025266.D	1	03/01/07	AFL	n/a	n/a	F:GXY992
Run #2							

CAS No.	Compound	Result	RL	MDL	Units	Q
74-82-8	Methane	5.08	0.50	0.30	ug/l	
74-84-0	Ethane	0.60 U	1.0	0.60	ug/l	
74-85-1	Ethene	0.80 U	1.0	0.80	ug/l	

(a) Analysis performed at Accutest Laboratories, Orlando, FL.

U = Not detected MDL - Method Detection Limit
RL = Reporting Limit
E = Indicates value exceeds calibration range
J = Indicates an estimated value
B = Indicates analyte found in associated method blank
N = Indicates presumptive evidence of a compound

Report of Analysis

Client Sample ID:	29WW35-FEB2007		
Lab Sample ID:	T16445-10	**Date Sampled:**	02/22/07
Matrix:	AQ - Ground Water	**Date Received:**	02/24/07
Method:	SW846 8330A SW846 3535A	**Percent Solids:**	n/a
Project:	Longhorn Army Ammunition Plant		

	File ID	DF	Analyzed	By	Prep Date	Prep Batch	Analytical Batch
Run #1 [a]	GG020217.D	1	03/02/07	AFL	03/01/07	F:OP19677	F:GGG906
Run #2							

	Initial Volume	Final Volume
Run #1	1050 ml	10.0 ml
Run #2		

CAS No.	Compound	Result	RL	MDL	Units	Q
2691-41-0	HMX	0.057 U	0.19	0.057	ug/l	
121-82-4	RDX	0.071 U	0.19	0.071	ug/l	
99-65-0	1,3-Dinitrobenzene	0.067 U	0.19	0.067	ug/l	
606-20-2	2,6-Dinitrotoluene	0.062 U	0.19	0.062	ug/l	
121-14-2	2,4-Dinitrotoluene	0.071 U	0.19	0.071	ug/l	
35572-78-2	2-amino-4,6-Dinitrotoluene	0.067 U	0.19	0.067	ug/l	
19406-51-0	4-amino-2,6-Dinitrotoluene	0.076 U	0.19	0.076	ug/l	
98-95-3	Nitrobenzene	0.057 U	0.19	0.057	ug/l	
88-72-2	o-Nitrotoluene	0.057 U	0.19	0.057	ug/l	
99-08-1	m-Nitrotoluene	0.071 U	0.19	0.071	ug/l	
99-99-0	p-Nitrotoluene	0.071 U	0.19	0.071	ug/l	
479-45-8	Tetryl	0.071 U	0.19	0.071	ug/l	
99-35-4	1,3,5-Trinitrobenzene	0.090 U	0.19	0.090	ug/l	
118-96-7	2,4,6-Trinitrotoluene	0.076 U	0.19	0.076	ug/l	

CAS No.	Surrogate Recoveries	Run# 1	Run# 2	Limits
610-39-9	3,4-Dinitrotoluene	98%		70-136%

(a) Analysis performed at Accutest Laboratories, Orlando, FL.

U = Not detected MDL - Method Detection Limit
RL = Reporting Limit
E = Indicates value exceeds calibration range
J = Indicates an estimated value
B = Indicates analyte found in associated method blank
N = Indicates presumptive evidence of a compound

Accutest LabLink@31214 11:24 08-May-2008

Report of Analysis

Client Sample ID:	29WW35-FEB2007		
Lab Sample ID:	T16445-10	**Date Sampled:**	02/22/07
Matrix:	AQ - Ground Water	**Date Received:**	02/24/07
		Percent Solids:	n/a
Project:	Longhorn Army Ammunition Plant		

General Chemistry

Analyte	Result	RL	MDL	Units	DF	Analyzed	By	Method
Perchlorate by IC								
Perchlorate [a]	21.5	10	4.0	ug/l	1	03/02/07 18:39	AFL	EPA 314
Alkalinity, Total as CaCO3	295	25	0.30	mg/l	5	03/08/07 12:50	EB	EPA 310.1
Carbon Dioxide	19.0	5.0		mg/l	1	03/12/07	RM	SM18 4500CO2D
Chloride [b]	77.0	2.0	0.57	mg/l	2	04/04/07 13:20	EB	EPA 325.3
Nitrogen, Nitrate [c]	< 0.10	0.10	0.0050	mg/l	1	02/26/07 09:23	LN	SM18 4500NO3E/NO2B
Nitrogen, Nitrate + Nitrite	0.0050 U	0.050	0.0050	mg/l	1	02/26/07 09:23	LN	EPA 353.2
Nitrogen, Nitrite	0.0030 U	0.050	0.0030	mg/l	1	02/24/07 14:28	LN	EPA 353.2
Specific Conductivity [a]	618	0.50	0.50	umhos/cm	1	03/06/07	AFL	EPA 120.1
Sulfate	49.0	20	2.6	mg/l	2	03/06/07 18:00	EB	EPA 375.3
Sulfide	0.0 B	0.20		mg/l	1	03/01/07 12:10	LN	EPA 376.1
Total Organic Carbon	0.70 B	1.0	0.092	mg/l	1	02/28/07 09:08	LN	EPA 415.1/9060
pH	7.5			su	1	03/01/07 13:00	TW	EPA 150.1/9040

(a) Analysis performed at Accutest Laboratories, Orlando, FL.
(b) Confirmation Sample. Analyzed outside of hold time.
(c) Calculated as: (Nitrogen, Nitrate + Nitrite) - (Nitrogen, Nitrite)

RL = Reporting Limit
MDL = Method Detection Limit
U = Indicates a result < MDL
B = Indicates a result > = MDL but < RL

Report of Analysis

Client Sample ID:	29WW35-FEB2007 FD		
Lab Sample ID:	T16445-11	**Date Sampled:**	02/22/07
Matrix:	AQ - Ground Water	**Date Received:**	02/24/07
Method:	SW846 8260B	**Percent Solids:**	n/a
Project:	Longhorn Army Ammunition Plant		

	File ID	DF	Analyzed	By	Prep Date	Prep Batch	Analytical Batch
Run #1	F0079199.D	1	03/07/07	LJ	n/a	n/a	VF2315
Run #2							

	Purge Volume
Run #1	5.0 ml
Run #2	

VOA TCL List

CAS No.	Compound	Result	RL	MDL	Units	Q
67-64-1	Acetone	2.8 U	50	2.8	ug/l	
71-43-2	Benzene	0.23 U	2.0	0.23	ug/l	
75-27-4	Bromodichloromethane	0.33 U	2.0	0.33	ug/l	
75-25-2	Bromoform	0.65 U	2.0	0.65	ug/l	
108-90-7	Chlorobenzene	0.54 U	2.0	0.54	ug/l	
75-00-3	Chloroethane	0.46 U	2.0	0.46	ug/l	
67-66-3	Chloroform	0.66 U	2.0	0.66	ug/l	
75-15-0	Carbon disulfide	2.8	2.0	0.62	ug/l	
56-23-5	Carbon tetrachloride	0.52 U	2.0	0.52	ug/l	
75-34-3	1,1-Dichloroethane	0.52 U	2.0	0.52	ug/l	
75-35-4	1,1-Dichloroethylene	0.68 U	2.0	0.68	ug/l	
107-06-2	1,2-Dichloroethane	0.53 U	2.0	0.53	ug/l	
78-87-5	1,2-Dichloropropane	0.59 U	2.0	0.59	ug/l	
124-48-1	Dibromochloromethane	0.68 U	2.0	0.68	ug/l	
156-59-2	cis-1,2-Dichloroethylene	0.83 U	2.0	0.83	ug/l	
10061-01-5	cis-1,3-Dichloropropene	0.59 U	2.0	0.59	ug/l	
156-60-5	trans-1,2-Dichloroethylene	0.75 U	2.0	0.75	ug/l	
10061-02-6	trans-1,3-Dichloropropene	0.61 U	2.0	0.61	ug/l	
100-41-4	Ethylbenzene	0.48 U	2.0	0.48	ug/l	
591-78-6	2-Hexanone	1.9 U	10	1.9	ug/l	
108-10-1	4-Methyl-2-pentanone	7.3 U	10	7.3	ug/l	
74-83-9	Methyl bromide	0.47 U	2.0	0.47	ug/l	
74-87-3	Methyl chloride	0.60 U	2.0	0.60	ug/l	
75-09-2	Methylene chloride	168	5.0	0.67	ug/l	
78-93-3	Methyl ethyl ketone	3.0 U	10	3.0	ug/l	
100-42-5	Styrene	0.50 U	2.0	0.50	ug/l	
71-55-6	1,1,1-Trichloroethane	0.37 U	2.0	0.37	ug/l	
79-34-5	1,1,2,2-Tetrachloroethane	0.46 U	2.0	0.46	ug/l	
79-00-5	1,1,2-Trichloroethane	0.66 U	2.0	0.66	ug/l	
127-18-4	Tetrachloroethylene	0.74 U	2.0	0.74	ug/l	
108-88-3	Toluene	0.54 U	2.0	0.54	ug/l	
79-01-6	Trichloroethylene	23.4	2.0	0.63	ug/l	

U = Not detected MDL - Method Detection Limit
RL = Reporting Limit
E = Indicates value exceeds calibration range
J = Indicates an estimated value
B = Indicates analyte found in associated method blank
N = Indicates presumptive evidence of a compound

Report of Analysis

Client Sample ID:	29WW35-FEB2007 FD		
Lab Sample ID:	T16445-11	**Date Sampled:**	02/22/07
Matrix:	AQ - Ground Water	**Date Received:**	02/24/07
Method:	SW846 8260B	**Percent Solids:**	n/a
Project:	Longhorn Army Ammunition Plant		

VOA TCL List

CAS No.	Compound	Result	RL	MDL	Units	Q
75-01-4	Vinyl chloride	0.32 U	2.0	0.32	ug/l	
1330-20-7	Xylene (total)	1.1 U	6.0	1.1	ug/l	

CAS No.	Surrogate Recoveries	Run# 1	Run# 2	Limits
1868-53-7	Dibromofluoromethane	105%		73-139%
17060-07-0	1,2-Dichloroethane-D4	99%		66-139%
2037-26-5	Toluene-D8	108%		77-148%
460-00-4	4-Bromofluorobenzene	118%		84-150%

U = Not detected MDL - Method Detection Limit
RL = Reporting Limit
E = Indicates value exceeds calibration range
J = Indicates an estimated value
B = Indicates analyte found in associated method blank
N = Indicates presumptive evidence of a compound

Accutest LabLink@31214 11:24 08-May-2008

Report of Analysis

Client Sample ID:	29WW35-FEB2007 FD		
Lab Sample ID:	T16445-11	**Date Sampled:**	02/22/07
Matrix:	AQ - Ground Water	**Date Received:**	02/24/07
Method:	RSKSOP-147/175	**Percent Solids:**	n/a
Project:	Longhorn Army Ammunition Plant		

	File ID	DF	Analyzed	By	Prep Date	Prep Batch	Analytical Batch
Run #1 [a]	XY025267.D	1	03/01/07	AFL	n/a	n/a	F:GXY992
Run #2							

CAS No.	Compound	Result	RL	MDL	Units	Q
74-82-8	Methane	5.70	0.50	0.30	ug/l	
74-84-0	Ethane	0.60 U	1.0	0.60	ug/l	
74-85-1	Ethene	0.80 U	1.0	0.80	ug/l	

(a) Analysis performed at Accutest Laboratories, Orlando, FL.

U = Not detected MDL - Method Detection Limit
RL = Reporting Limit
E = Indicates value exceeds calibration range
J = Indicates an estimated value
B = Indicates analyte found in associated method blank
N = Indicates presumptive evidence of a compound

Accutest LabLink@31214 11:24 08-May-2008

Report of Analysis

Client Sample ID: 29WW35-FEB2007 FD
Lab Sample ID: T16445-11
Matrix: AQ - Ground Water
Method: SW846 8330A SW846 3535A
Project: Longhorn Army Ammunition Plant

Date Sampled: 02/22/07
Date Received: 02/24/07
Percent Solids: n/a

	File ID	DF	Analyzed	By	Prep Date	Prep Batch	Analytical Batch
Run #1 [a]	GG020218.D	1	03/02/07	AFL	03/01/07	F:OP19677	F:GGG906
Run #2							

	Initial Volume	Final Volume
Run #1	1050 ml	10.0 ml
Run #2		

CAS No.	Compound	Result	RL	MDL	Units	Q
2691-41-0	HMX	0.057 U	0.19	0.057	ug/l	
121-82-4	RDX	0.071 U	0.19	0.071	ug/l	
99-65-0	1,3-Dinitrobenzene	0.067 U	0.19	0.067	ug/l	
606-20-2	2,6-Dinitrotoluene	0.062 U	0.19	0.062	ug/l	
121-14-2	2,4-Dinitrotoluene	0.071 U	0.19	0.071	ug/l	
35572-78-2	2-amino-4,6-Dinitrotoluene	0.067 U	0.19	0.067	ug/l	
19406-51-0	4-amino-2,6-Dinitrotoluene	0.076 U	0.19	0.076	ug/l	
98-95-3	Nitrobenzene	0.057 U	0.19	0.057	ug/l	
88-72-2	o-Nitrotoluene	0.057 U	0.19	0.057	ug/l	
99-08-1	m-Nitrotoluene	0.071 U	0.19	0.071	ug/l	
99-99-0	p-Nitrotoluene	0.071 U	0.19	0.071	ug/l	
479-45-8	Tetryl	0.071 U	0.19	0.071	ug/l	
99-35-4	1,3,5-Trinitrobenzene	0.090 U	0.19	0.090	ug/l	
118-96-7	2,4,6-Trinitrotoluene	0.076 U	0.19	0.076	ug/l	

CAS No.	Surrogate Recoveries	Run# 1	Run# 2	Limits
610-39-9	3,4-Dinitrotoluene	117%		70-136%

(a) Analysis performed at Accutest Laboratories, Orlando, FL.

U = Not detected MDL - Method Detection Limit
RL = Reporting Limit
E = Indicates value exceeds calibration range
J = Indicates an estimated value
B = Indicates analyte found in associated method blank
N = Indicates presumptive evidence of a compound

Accutest LabLink@31214 11:24 08-May-2008

Report of Analysis

Client Sample ID:	29WW35-FEB2007 FD		
Lab Sample ID:	T16445-11	**Date Sampled:**	02/22/07
Matrix:	AQ - Ground Water	**Date Received:**	02/24/07
		Percent Solids:	n/a
Project:	Longhorn Army Ammunition Plant		

General Chemistry

Analyte	Result	RL	MDL	Units	DF	Analyzed	By	Method
Perchlorate by IC								
Perchlorate [a]	5.1 B	10	4.0	ug/l	1	03/02/07 18:53	AFL	EPA 314
Alkalinity, Total as CaCO3	303	10	0.30	mg/l	2	03/08/07 12:50	EB	EPA 310.1
Carbon Dioxide	15.0	5.0		mg/l	1	03/12/07	RM	SM18 4500CO2D
Chloride [b]	77.0	2.0	0.57	mg/l	2	04/04/07 13:20	EB	EPA 325.3
Nitrogen, Nitrate [c]	< 0.10	0.10	0.0050	mg/l	1	02/26/07 09:23	LN	SM18 4500NO3E/NO2B
Nitrogen, Nitrate + Nitrite	0.0050 U	0.050	0.0050	mg/l	1	02/26/07 09:23	LN	EPA 353.2
Nitrogen, Nitrite	0.0030 U	0.050	0.0030	mg/l	1	02/24/07 14:28	LN	EPA 353.2
Specific Conductivity [a]	796	0.50	0.50	umhos/cm	1	03/06/07	AFL	EPA 120.1
Sulfate	36.0	20	2.6	mg/l	2	03/06/07 18:00	EB	EPA 375.3
Sulfide	0.0 B	0.20		mg/l	1	03/01/07 12:10	LN	EPA 376.1
Total Organic Carbon	0.90 B	1.0	0.092	mg/l	1	02/28/07 09:08	LN	EPA 415.1/9060
pH	7.6			su	1	03/01/07 13:00	TW	EPA 150.1/9040

(a) Analysis performed at Accutest Laboratories, Orlando, FL.
(b) Confirmation Sample. Analyzed outside of hold time.
(c) Calculated as: (Nitrogen, Nitrate + Nitrite) - (Nitrogen, Nitrite)

RL = Reporting Limit
MDL = Method Detection Limit

U = Indicates a result < MDL
B = Indicates a result > = MDL but < RL

Report of Analysis

Client Sample ID:	29WW06-FEB2007		
Lab Sample ID:	T16445-12	**Date Sampled:**	02/22/07
Matrix:	AQ - Ground Water	**Date Received:**	02/24/07
Method:	SW846 8260B	**Percent Solids:**	n/a
Project:	Longhorn Army Ammunition Plant		

	File ID	DF	Analyzed	By	Prep Date	Prep Batch	Analytical Batch
Run #1	F0079230.D	1	03/08/07	LJ	n/a	n/a	VF2318
Run #2							

	Purge Volume
Run #1	5.0 ml
Run #2	

VOA TCL List

CAS No.	Compound	Result	RL	MDL	Units	Q
67-64-1	Acetone	2.8 U	50	2.8	ug/l	
71-43-2	Benzene	0.23 U	2.0	0.23	ug/l	
75-27-4	Bromodichloromethane	0.33 U	2.0	0.33	ug/l	
75-25-2	Bromoform	0.65 U	2.0	0.65	ug/l	
108-90-7	Chlorobenzene	0.54 U	2.0	0.54	ug/l	
75-00-3	Chloroethane	0.46 U	2.0	0.46	ug/l	
67-66-3	Chloroform	0.66 U	2.0	0.66	ug/l	
75-15-0	Carbon disulfide	0.62 U	2.0	0.62	ug/l	
56-23-5	Carbon tetrachloride	0.52 U	2.0	0.52	ug/l	
75-34-3	1,1-Dichloroethane	0.52 U	2.0	0.52	ug/l	
75-35-4	1,1-Dichloroethylene	0.68 U	2.0	0.68	ug/l	
107-06-2	1,2-Dichloroethane	0.53 U	2.0	0.53	ug/l	
78-87-5	1,2-Dichloropropane	0.59 U	2.0	0.59	ug/l	
124-48-1	Dibromochloromethane	0.68 U	2.0	0.68	ug/l	
156-59-2	cis-1,2-Dichloroethylene	0.83 U	2.0	0.83	ug/l	
10061-01-5	cis-1,3-Dichloropropene	0.59 U	2.0	0.59	ug/l	
156-60-5	trans-1,2-Dichloroethylene	0.75 U	2.0	0.75	ug/l	
10061-02-6	trans-1,3-Dichloropropene	0.61 U	2.0	0.61	ug/l	
100-41-4	Ethylbenzene	0.48 U	2.0	0.48	ug/l	
591-78-6	2-Hexanone	1.9 U	10	1.9	ug/l	
108-10-1	4-Methyl-2-pentanone	7.3 U	10	7.3	ug/l	
74-83-9	Methyl bromide	0.47 U	2.0	0.47	ug/l	
74-87-3	Methyl chloride	0.60 U	2.0	0.60	ug/l	
75-09-2	Methylene chloride	0.67 U	5.0	0.67	ug/l	
78-93-3	Methyl ethyl ketone	3.0 U	10	3.0	ug/l	
100-42-5	Styrene	0.50 U	2.0	0.50	ug/l	
71-55-6	1,1,1-Trichloroethane	0.37 U	2.0	0.37	ug/l	
79-34-5	1,1,2,2-Tetrachloroethane	0.46 U	2.0	0.46	ug/l	
79-00-5	1,1,2-Trichloroethane	0.66 U	2.0	0.66	ug/l	
127-18-4	Tetrachloroethylene	0.74 U	2.0	0.74	ug/l	
108-88-3	Toluene	0.54 U	2.0	0.54	ug/l	
79-01-6	Trichloroethylene	0.63 U	2.0	0.63	ug/l	

U = Not detected MDL - Method Detection Limit
RL = Reporting Limit
E = Indicates value exceeds calibration range
J = Indicates an estimated value
B = Indicates analyte found in associated method blank
N = Indicates presumptive evidence of a compound

Report of Analysis

Client Sample ID:	29WW06-FEB2007		
Lab Sample ID:	T16445-12	**Date Sampled:**	02/22/07
Matrix:	AQ - Ground Water	**Date Received:**	02/24/07
Method:	SW846 8260B	**Percent Solids:**	n/a
Project:	Longhorn Army Ammunition Plant		

VOA TCL List

CAS No.	Compound	Result	RL	MDL	Units	Q
75-01-4	Vinyl chloride	0.32 U	2.0	0.32	ug/l	
1330-20-7	Xylene (total)	1.1 U	6.0	1.1	ug/l	

CAS No.	Surrogate Recoveries	Run# 1	Run# 2	Limits
1868-53-7	Dibromofluoromethane	105%		73-139%
17060-07-0	1,2-Dichloroethane-D4	98%		66-139%
2037-26-5	Toluene-D8	104%		77-148%
460-00-4	4-Bromofluorobenzene	105%		84-150%

U = Not detected MDL - Method Detection Limit
RL = Reporting Limit
E = Indicates value exceeds calibration range
J = Indicates an estimated value
B = Indicates analyte found in associated method blank
N = Indicates presumptive evidence of a compound

Accutest LabLink@31214 11:24 08-May-2008

Report of Analysis

Client Sample ID:	29WW06-FEB2007		
Lab Sample ID:	T16445-12	**Date Sampled:**	02/22/07
Matrix:	AQ - Ground Water	**Date Received:**	02/24/07
Method:	RSKSOP-147/175	**Percent Solids:**	n/a
Project:	Longhorn Army Ammunition Plant		

	File ID	DF	Analyzed	By	Prep Date	Prep Batch	Analytical Batch
Run #1 [a]	XY025268.D	1	03/01/07	AFL	n/a	n/a	F:GXY992
Run #2							

CAS No.	Compound	Result	RL	MDL	Units	Q
74-82-8	Methane	0.30 U	0.50	0.30	ug/l	
74-84-0	Ethane	0.60 U	1.0	0.60	ug/l	
74-85-1	Ethene	0.80 U	1.0	0.80	ug/l	

(a) Analysis performed at Accutest Laboratories, Orlando, FL.

U = Not detected MDL - Method Detection Limit
RL = Reporting Limit
E = Indicates value exceeds calibration range
J = Indicates an estimated value
B = Indicates analyte found in associated method blank
N = Indicates presumptive evidence of a compound

Report of Analysis

Client Sample ID:	29WW06-FEB2007		
Lab Sample ID:	T16445-12	**Date Sampled:**	02/22/07
Matrix:	AQ - Ground Water	**Date Received:**	02/24/07
Method:	SW846 8330A SW846 3535A	**Percent Solids:**	n/a
Project:	Longhorn Army Ammunition Plant		

	File ID	DF	Analyzed	By	Prep Date	Prep Batch	Analytical Batch
Run #1 [a]	GG020219.D	1	03/03/07	AFL	03/01/07	F:OP19677	F:GGG906
Run #2 [b]	GG020236.D	1	03/05/07	AFL	03/01/07	F:OP19677	F:GGG907

	Initial Volume	Final Volume
Run #1	1050 ml	10.0 ml
Run #2	1050 ml	10.0 ml

CAS No.	Compound	Result	RL	MDL	Units	Q
2691-41-0	HMX	0.057 U	0.19	0.057	ug/l	
121-82-4	RDX	0.071 U	0.19	0.071	ug/l	
99-65-0	1,3-Dinitrobenzene	0.067 U	0.19	0.067	ug/l	
606-20-2	2,6-Dinitrotoluene	0.062 U	0.19	0.062	ug/l	
121-14-2	2,4-Dinitrotoluene	0.16	0.19	0.071	ug/l	J
35572-78-2	2-amino-4,6-Dinitrotoluene	0.067 U	0.19	0.067	ug/l	
19406-51-0	4-amino-2,6-Dinitrotoluene	0.17	0.19	0.076	ug/l	J
98-95-3	Nitrobenzene	0.057 U	0.19	0.057	ug/l	
88-72-2	o-Nitrotoluene	0.057 U	0.19	0.057	ug/l	
99-08-1	m-Nitrotoluene	0.071 U	0.19	0.071	ug/l	
99-99-0	p-Nitrotoluene	0.071 U	0.19	0.071	ug/l	
479-45-8	Tetryl	0.071 U	0.19	0.071	ug/l	
99-35-4	1,3,5-Trinitrobenzene	0.090 U	0.19	0.090	ug/l	
118-96-7	2,4,6-Trinitrotoluene	0.076 U	0.19	0.076	ug/l	

CAS No.	Surrogate Recoveries	Run# 1	Run# 2	Limits
610-39-9	3,4-Dinitrotoluene	103%	90%	70-136%

(a) All hits confirmed by reanalysis on a dissimilar column. Analysis performed at Accutest Laboratories, Orlando, FL.
(b) Confirmation run. Analysis performed at Accutest Laboratories, Orlando, FL.

U = Not detected MDL - Method Detection Limit
RL = Reporting Limit
E = Indicates value exceeds calibration range
J = Indicates an estimated value
B = Indicates analyte found in associated method blank
N = Indicates presumptive evidence of a compound

Accutest LabLink@31214 11:24 08-May-2008

Report of Analysis

Client Sample ID:	29WW06-FEB2007		
Lab Sample ID:	T16445-12	**Date Sampled:**	02/22/07
Matrix:	AQ - Ground Water	**Date Received:**	02/24/07
		Percent Solids:	n/a
Project:	Longhorn Army Ammunition Plant		

General Chemistry

Analyte	Result	RL	MDL	Units	DF	Analyzed	By	Method
Perchlorate by IC								
Perchlorate [a]	20 U	50	20	ug/l	5	03/07/07 18:35	AFL	EPA 314
Alkalinity, Total as CaCO3	856	25	0.30	mg/l	5	03/08/07 12:50	EB	EPA 310.1
Carbon Dioxide	270	5.0		mg/l	1	03/12/07	RM	SM18 4500CO2D
Chloride	298	20	0.57	mg/l	20	03/05/07 12:15	EB	EPA 325.3
Nitrogen, Nitrate [b]	1.3	0.25	0.0050	mg/l	1	02/26/07 09:23	LN	SM18 4500NO3E/NO2B
Nitrogen, Nitrate + Nitrite	1.3	0.20	0.0050	mg/l	4	02/26/07 09:23	LN	EPA 353.2
Nitrogen, Nitrite	0.0030 U	0.050	0.0030	mg/l	1	02/24/07 14:28	LN	EPA 353.2
Specific Conductivity [c]	2640	0.50	0.50	umhos/cm	1	03/06/07	AFL	EPA 120.1
Sulfate	726	40	2.6	mg/l	4	03/06/07 18:00	EB	EPA 375.3
Sulfide	0.0 B	0.20		mg/l	1	03/01/07 12:10	LN	EPA 376.1
Total Organic Carbon	38.0	1.0	0.092	mg/l	1	02/28/07 09:08	LN	EPA 415.1/9060
pH	6.8			su	1	03/01/07 13:00	TW	EPA 150.1/9040

(a) Dilution required due to matrix interference. Analysis performed at Accutest Laboratories, Orlando, FL.
(b) Calculated as: (Nitrogen, Nitrate + Nitrite) - (Nitrogen, Nitrite)
(c) Analysis performed at Accutest Laboratories, Orlando, FL.

RL = Reporting Limit
MDL = Method Detection Limit
U = Indicates a result < MDL
B = Indicates a result > = MDL but < RL

Report of Analysis

Client Sample ID:	17WW05-FEB2007		
Lab Sample ID:	T16445-13	**Date Sampled:**	02/23/07
Matrix:	AQ - Ground Water	**Date Received:**	02/24/07
Method:	SW846 8260B	**Percent Solids:**	n/a
Project:	Longhorn Army Ammunition Plant		

	File ID	DF	Analyzed	By	Prep Date	Prep Batch	Analytical Batch
Run #1	F0079231.D	1	03/08/07	LJ	n/a	n/a	VF2318
Run #2							

	Purge Volume
Run #1	5.0 ml
Run #2	

VOA TCL List

CAS No.	Compound	Result	RL	MDL	Units	Q
67-64-1	Acetone	2.8 U	50	2.8	ug/l	
71-43-2	Benzene	0.23 U	2.0	0.23	ug/l	
75-27-4	Bromodichloromethane	0.33 U	2.0	0.33	ug/l	
75-25-2	Bromoform	0.65 U	2.0	0.65	ug/l	
108-90-7	Chlorobenzene	0.54 U	2.0	0.54	ug/l	
75-00-3	Chloroethane	0.46 U	2.0	0.46	ug/l	
67-66-3	Chloroform	0.66 U	2.0	0.66	ug/l	
75-15-0	Carbon disulfide	0.62 U	2.0	0.62	ug/l	
56-23-5	Carbon tetrachloride	0.52 U	2.0	0.52	ug/l	
75-34-3	1,1-Dichloroethane	0.52 U	2.0	0.52	ug/l	
75-35-4	1,1-Dichloroethylene	0.68 U	2.0	0.68	ug/l	
107-06-2	1,2-Dichloroethane	0.53 U	2.0	0.53	ug/l	
78-87-5	1,2-Dichloropropane	0.59 U	2.0	0.59	ug/l	
124-48-1	Dibromochloromethane	0.68 U	2.0	0.68	ug/l	
156-59-2	cis-1,2-Dichloroethylene	0.83 U	2.0	0.83	ug/l	
10061-01-5	cis-1,3-Dichloropropene	0.59 U	2.0	0.59	ug/l	
156-60-5	trans-1,2-Dichloroethylene	0.75 U	2.0	0.75	ug/l	
10061-02-6	trans-1,3-Dichloropropene	0.61 U	2.0	0.61	ug/l	
100-41-4	Ethylbenzene	0.48 U	2.0	0.48	ug/l	
591-78-6	2-Hexanone	1.9 U	10	1.9	ug/l	
108-10-1	4-Methyl-2-pentanone	7.3 U	10	7.3	ug/l	
74-83-9	Methyl bromide	0.47 U	2.0	0.47	ug/l	
74-87-3	Methyl chloride	0.60 U	2.0	0.60	ug/l	
75-09-2	Methylene chloride	0.67 U	5.0	0.67	ug/l	
78-93-3	Methyl ethyl ketone	3.0 U	10	3.0	ug/l	
100-42-5	Styrene	0.50 U	2.0	0.50	ug/l	
71-55-6	1,1,1-Trichloroethane	0.37 U	2.0	0.37	ug/l	
79-34-5	1,1,2,2-Tetrachloroethane	0.46 U	2.0	0.46	ug/l	
79-00-5	1,1,2-Trichloroethane	0.66 U	2.0	0.66	ug/l	
127-18-4	Tetrachloroethylene	0.74 U	2.0	0.74	ug/l	
108-88-3	Toluene	0.54 U	2.0	0.54	ug/l	
79-01-6	Trichloroethylene	0.63 U	2.0	0.63	ug/l	

U = Not detected MDL - Method Detection Limit
RL = Reporting Limit
E = Indicates value exceeds calibration range
J = Indicates an estimated value
B = Indicates analyte found in associated method blank
N = Indicates presumptive evidence of a compound

Report of Analysis

Client Sample ID:	17WW05-FEB2007		
Lab Sample ID:	T16445-13	**Date Sampled:**	02/23/07
Matrix:	AQ - Ground Water	**Date Received:**	02/24/07
Method:	SW846 8260B	**Percent Solids:**	n/a
Project:	Longhorn Army Ammunition Plant		

VOA TCL List

CAS No.	Compound	Result	RL	MDL	Units	Q
75-01-4	Vinyl chloride	0.32 U	2.0	0.32	ug/l	
1330-20-7	Xylene (total)	1.1 U	6.0	1.1	ug/l	

CAS No.	Surrogate Recoveries	Run# 1	Run# 2	Limits
1868-53-7	Dibromofluoromethane	105%		73-139%
17060-07-0	1,2-Dichloroethane-D4	100%		66-139%
2037-26-5	Toluene-D8	103%		77-148%
460-00-4	4-Bromofluorobenzene	109%		84-150%

U = Not detected MDL - Method Detection Limit
RL = Reporting Limit
E = Indicates value exceeds calibration range
J = Indicates an estimated value
B = Indicates analyte found in associated method blank
N = Indicates presumptive evidence of a compound

Accutest LabLink@31214 11:24 08-May-2008

Report of Analysis

Client Sample ID:	17WW05-FEB2007		
Lab Sample ID:	T16445-13	**Date Sampled:**	02/23/07
Matrix:	AQ - Ground Water	**Date Received:**	02/24/07
Method:	RSKSOP-147/175	**Percent Solids:**	n/a
Project:	Longhorn Army Ammunition Plant		

	File ID	DF	Analyzed	By	Prep Date	Prep Batch	Analytical Batch
Run #1 [a]	XY025269.D	1	03/01/07	AFL	n/a	n/a	F:GXY992
Run #2							

CAS No.	Compound	Result	RL	MDL	Units	Q
74-82-8	Methane	349	0.50	0.30	ug/l	
74-84-0	Ethane	0.60 U	1.0	0.60	ug/l	
74-85-1	Ethene	0.80 U	1.0	0.80	ug/l	

(a) Analysis performed at Accutest Laboratories, Orlando, FL.

U = Not detected MDL - Method Detection Limit
RL = Reporting Limit
E = Indicates value exceeds calibration range
J = Indicates an estimated value
B = Indicates analyte found in associated method blank
N = Indicates presumptive evidence of a compound

Report of Analysis

Client Sample ID:	17WW05-FEB2007		
Lab Sample ID:	T16445-13	**Date Sampled:**	02/23/07
Matrix:	AQ - Ground Water	**Date Received:**	02/24/07
Method:	SW846 8330A SW846 3535A	**Percent Solids:**	n/a
Project:	Longhorn Army Ammunition Plant		

	File ID	DF	Analyzed	By	Prep Date	Prep Batch	Analytical Batch
Run #1 [a]	GG020220.D	1	03/03/07	AFL	03/01/07	F:OP19677	F:GGG906
Run #2							

	Initial Volume	Final Volume
Run #1	1000 ml	10.0 ml
Run #2		

CAS No.	Compound	Result	RL	MDL	Units	Q
2691-41-0	HMX	0.060 U	0.20	0.060	ug/l	
121-82-4	RDX	0.075 U	0.20	0.075	ug/l	
99-65-0	1,3-Dinitrobenzene	0.070 U	0.20	0.070	ug/l	
606-20-2	2,6-Dinitrotoluene	0.065 U	0.20	0.065	ug/l	
121-14-2	2,4-Dinitrotoluene	0.075 U	0.20	0.075	ug/l	
35572-78-2	2-amino-4,6-Dinitrotoluene	0.070 U	0.20	0.070	ug/l	
19406-51-0	4-amino-2,6-Dinitrotoluene	0.080 U	0.20	0.080	ug/l	
98-95-3	Nitrobenzene	0.060 U	0.20	0.060	ug/l	
88-72-2	o-Nitrotoluene	0.060 U	0.20	0.060	ug/l	
99-08-1	m-Nitrotoluene	0.075 U	0.20	0.075	ug/l	
99-99-0	p-Nitrotoluene	0.075 U	0.20	0.075	ug/l	
479-45-8	Tetryl	0.075 U	0.20	0.075	ug/l	
99-35-4	1,3,5-Trinitrobenzene	0.095 U	0.20	0.095	ug/l	
118-96-7	2,4,6-Trinitrotoluene	0.080 U	0.20	0.080	ug/l	

CAS No.	Surrogate Recoveries	Run# 1	Run# 2	Limits
610-39-9	3,4-Dinitrotoluene	107%		70-136%

(a) Analysis performed at Accutest Laboratories, Orlando, FL.

U = Not detected MDL - Method Detection Limit
RL = Reporting Limit
E = Indicates value exceeds calibration range
J = Indicates an estimated value
B = Indicates analyte found in associated method blank
N = Indicates presumptive evidence of a compound

Report of Analysis

Client Sample ID:	17WW05-FEB2007		
Lab Sample ID:	T16445-13	**Date Sampled:**	02/23/07
Matrix:	AQ - Ground Water	**Date Received:**	02/24/07
		Percent Solids:	n/a
Project:	Longhorn Army Ammunition Plant		

General Chemistry

Analyte	Result	RL	MDL	Units	DF	Analyzed	By	Method
Perchlorate by IC								
Perchlorate [a]	4.0 U	10	4.0	ug/l	1	03/02/07 19:22	AFL	EPA 314
Alkalinity, Total as CaCO3	422	25	0.30	mg/l	5	03/08/07 12:50	EB	EPA 310.1
Carbon Dioxide	5.2	5.0		mg/l	1	03/12/07	RM	SM18 4500CO2D
Chloride	174	20	0.57	mg/l	20	03/05/07 12:15	EB	EPA 325.3
Nitrogen, Nitrate [b]	< 0.10	0.10	0.0050	mg/l	1	02/26/07 09:23	LN	SM18 4500NO3E/NO2B
Nitrogen, Nitrate + Nitrite	0.0050 U	0.050	0.0050	mg/l	1	02/26/07 09:23	LN	EPA 353.2
Nitrogen, Nitrite	0.0030 U	0.050	0.0030	mg/l	1	02/24/07 14:28	LN	EPA 353.2
Specific Conductivity [a]	1170	0.50	0.50	umhos/cm	1	03/06/07	AFL	EPA 120.1
Sulfate	34.0	20	2.6	mg/l	2	03/06/07 18:00	EB	EPA 375.3
Sulfide	0.0 B	0.20		mg/l	1	03/01/07 12:10	LN	EPA 376.1
Total Organic Carbon	3.0	1.0	0.092	mg/l	1	02/28/07 09:08	LN	EPA 415.1/9060
pH	8.2			su	1	03/01/07 13:00	TW	EPA 150.1/9040

(a) Analysis performed at Accutest Laboratories, Orlando, FL.
(b) Calculated as: (Nitrogen, Nitrate + Nitrite) - (Nitrogen, Nitrite)

RL = Reporting Limit
MDL = Method Detection Limit
U = Indicates a result < MDL
B = Indicates a result > = MDL but < RL

Report of Analysis

Client Sample ID:	7WW06-FEB2007		
Lab Sample ID:	T16445-14	**Date Sampled:**	02/23/07
Matrix:	AQ - Ground Water	**Date Received:**	02/24/07
Method:	SW846 8260B	**Percent Solids:**	n/a
Project:	Longhorn Army Ammunition Plant		

	File ID	DF	Analyzed	By	Prep Date	Prep Batch	Analytical Batch
Run #1	F0079202.D	1	03/07/07	LJ	n/a	n/a	VF2315
Run #2	F0079238.D	5	03/08/07	LJ	n/a	n/a	VF2318

	Purge Volume
Run #1	5.0 ml
Run #2	5.0 ml

VOA TCL List

CAS No.	Compound	Result	RL	MDL	Units	Q
67-64-1	Acetone	2.8 U	50	2.8	ug/l	
71-43-2	Benzene	0.23 U	2.0	0.23	ug/l	
75-27-4	Bromodichloromethane	0.33 U	2.0	0.33	ug/l	
75-25-2	Bromoform	0.65 U	2.0	0.65	ug/l	
108-90-7	Chlorobenzene	0.54 U	2.0	0.54	ug/l	
75-00-3	Chloroethane	0.46 U	2.0	0.46	ug/l	
67-66-3	Chloroform	0.66 U	2.0	0.66	ug/l	
75-15-0	Carbon disulfide	0.62 U	2.0	0.62	ug/l	
56-23-5	Carbon tetrachloride	0.52 U	2.0	0.52	ug/l	
75-34-3	1,1-Dichloroethane	1.5	2.0	0.52	ug/l	J
75-35-4	1,1-Dichloroethylene	6.9	2.0	0.68	ug/l	
107-06-2	1,2-Dichloroethane	8.0	2.0	0.53	ug/l	
78-87-5	1,2-Dichloropropane	0.59 U	2.0	0.59	ug/l	
124-48-1	Dibromochloromethane	0.68 U	2.0	0.68	ug/l	
156-59-2	cis-1,2-Dichloroethylene	9.5	2.0	0.83	ug/l	
10061-01-5	cis-1,3-Dichloropropene	0.59 U	2.0	0.59	ug/l	
156-60-5	trans-1,2-Dichloroethylene	2.6	2.0	0.75	ug/l	
10061-02-6	trans-1,3-Dichloropropene	0.61 U	2.0	0.61	ug/l	
100-41-4	Ethylbenzene	0.48 U	2.0	0.48	ug/l	
591-78-6	2-Hexanone	1.9 U	10	1.9	ug/l	
108-10-1	4-Methyl-2-pentanone	7.3 U	10	7.3	ug/l	
74-83-9	Methyl bromide	0.47 U	2.0	0.47	ug/l	
74-87-3	Methyl chloride	0.60 U	2.0	0.60	ug/l	
75-09-2	Methylene chloride	0.67 U	5.0	0.67	ug/l	
78-93-3	Methyl ethyl ketone	3.0 U	10	3.0	ug/l	
100-42-5	Styrene	0.50 U	2.0	0.50	ug/l	
71-55-6	1,1,1-Trichloroethane	0.37 U	2.0	0.37	ug/l	
79-34-5	1,1,2,2-Tetrachloroethane	0.46 U	2.0	0.46	ug/l	
79-00-5	1,1,2-Trichloroethane	0.66 U	2.0	0.66	ug/l	
127-18-4	Tetrachloroethylene	0.74 U	2.0	0.74	ug/l	
108-88-3	Toluene	0.54 U	2.0	0.54	ug/l	
79-01-6	Trichloroethylene	205 [a]	10	3.2	ug/l	

U = Not detected MDL - Method Detection Limit
RL = Reporting Limit
E = Indicates value exceeds calibration range
J = Indicates an estimated value
B = Indicates analyte found in associated method blank
N = Indicates presumptive evidence of a compound

Report of Analysis

Client Sample ID:	7WW06-FEB2007		
Lab Sample ID:	T16445-14	**Date Sampled:**	02/23/07
Matrix:	AQ - Ground Water	**Date Received:**	02/24/07
Method:	SW846 8260B	**Percent Solids:**	n/a
Project:	Longhorn Army Ammunition Plant		

VOA TCL List

CAS No.	Compound	Result	RL	MDL	Units	Q
75-01-4	Vinyl chloride	0.32 U	2.0	0.32	ug/l	
1330-20-7	Xylene (total)	1.1 U	6.0	1.1	ug/l	

CAS No.	Surrogate Recoveries	Run# 1	Run# 2	Limits
1868-53-7	Dibromofluoromethane	105%	104%	73-139%
17060-07-0	1,2-Dichloroethane-D4	105%	97%	66-139%
2037-26-5	Toluene-D8	106%	105%	77-148%
460-00-4	4-Bromofluorobenzene	117%	123%	84-150%

(a) Result is from Run# 2

U = Not detected MDL - Method Detection Limit
RL = Reporting Limit
E = Indicates value exceeds calibration range
J = Indicates an estimated value
B = Indicates analyte found in associated method blank
N = Indicates presumptive evidence of a compound

Accutest LabLink@31214 11:24 08-May-2008

Report of Analysis

Client Sample ID:	7WW06-FEB2007		
Lab Sample ID:	T16445-14	**Date Sampled:**	02/23/07
Matrix:	AQ - Ground Water	**Date Received:**	02/24/07
Method:	RSKSOP-147/175	**Percent Solids:**	n/a
Project:	Longhorn Army Ammunition Plant		

	File ID	DF	Analyzed	By	Prep Date	Prep Batch	Analytical Batch
Run #1 [a]	XY025270.D	1	03/01/07	AFL	n/a	n/a	F:GXY992
Run #2							

CAS No.	Compound	Result	RL	MDL	Units	Q
74-82-8	Methane	1.79	0.50	0.30	ug/l	
74-84-0	Ethane	0.60 U	1.0	0.60	ug/l	
74-85-1	Ethene	0.80 U	1.0	0.80	ug/l	

(a) Analysis performed at Accutest Laboratories, Orlando, FL.

U = Not detected MDL - Method Detection Limit
RL = Reporting Limit
E = Indicates value exceeds calibration range
J = Indicates an estimated value
B = Indicates analyte found in associated method blank
N = Indicates presumptive evidence of a compound

Report of Analysis

Client Sample ID: 7WW06-FEB2007
Lab Sample ID: T16445-14
Matrix: AQ - Ground Water
Method: SW846 8330A SW846 3535A
Project: Longhorn Army Ammunition Plant

Date Sampled: 02/23/07
Date Received: 02/24/07
Percent Solids: n/a

	File ID	DF	Analyzed	By	Prep Date	Prep Batch	Analytical Batch
Run #1 [a]	GG020221.D	1	03/03/07	AFL	03/01/07	F:OP19677	F:GGG906
Run #2							

	Initial Volume	Final Volume
Run #1	1000 ml	10.0 ml
Run #2		

CAS No.	Compound	Result	RL	MDL	Units	Q
2691-41-0	HMX	0.060 U	0.20	0.060	ug/l	
121-82-4	RDX	0.075 U	0.20	0.075	ug/l	
99-65-0	1,3-Dinitrobenzene	0.070 U	0.20	0.070	ug/l	
606-20-2	2,6-Dinitrotoluene	0.065 U	0.20	0.065	ug/l	
121-14-2	2,4-Dinitrotoluene	0.075 U	0.20	0.075	ug/l	
35572-78-2	2-amino-4,6-Dinitrotoluene	0.070 U	0.20	0.070	ug/l	
19406-51-0	4-amino-2,6-Dinitrotoluene	0.080 U	0.20	0.080	ug/l	
98-95-3	Nitrobenzene	0.060 U	0.20	0.060	ug/l	
88-72-2	o-Nitrotoluene	0.060 U	0.20	0.060	ug/l	
99-08-1	m-Nitrotoluene	0.075 U	0.20	0.075	ug/l	
99-99-0	p-Nitrotoluene	0.075 U	0.20	0.075	ug/l	
479-45-8	Tetryl	0.075 U	0.20	0.075	ug/l	
99-35-4	1,3,5-Trinitrobenzene	0.095 U	0.20	0.095	ug/l	
118-96-7	2,4,6-Trinitrotoluene	0.080 U	0.20	0.080	ug/l	

CAS No.	Surrogate Recoveries	Run# 1	Run# 2	Limits
610-39-9	3,4-Dinitrotoluene	102%		70-136%

(a) Analysis performed at Accutest Laboratories, Orlando, FL.

U = Not detected MDL - Method Detection Limit
RL = Reporting Limit
E = Indicates value exceeds calibration range
J = Indicates an estimated value
B = Indicates analyte found in associated method blank
N = Indicates presumptive evidence of a compound

Accutest LabLink@31214 11:24 08-May-2008

Report of Analysis

Client Sample ID:	7WW06-FEB2007		
Lab Sample ID:	T16445-14	**Date Sampled:**	02/23/07
Matrix:	AQ - Ground Water	**Date Received:**	02/24/07
		Percent Solids:	n/a
Project:	Longhorn Army Ammunition Plant		

General Chemistry

Analyte	Result	RL	MDL	Units	DF	Analyzed	By	Method
Perchlorate by IC								
Perchlorate [a]	4.0 U	10	4.0	ug/l	1	03/02/07 19:36	AFL	EPA 314
Alkalinity, Total as CaCO3	336	25	0.30	mg/l	5	03/08/07 12:50	EB	EPA 310.1
Carbon Dioxide	4.8 B	5.0		mg/l	1	03/12/07	RM	SM18 4500CO2D
Chloride	1110	50	0.57	mg/l	50	03/05/07 12:15	EB	EPA 325.3
Nitrogen, Nitrate [b]	< 0.10	0.10	0.0050	mg/l	1	02/26/07 09:23	LN	SM18 4500NO3E/NO2B
Nitrogen, Nitrate + Nitrite	0.0050 U	0.050	0.0050	mg/l	1	02/26/07 09:23	LN	EPA 353.2
Nitrogen, Nitrite	0.0030 U	0.050	0.0030	mg/l	1	02/24/07 14:28	LN	EPA 353.2
Specific Conductivity [a]	3240	0.50	0.50	umhos/cm	1	03/06/07	AFL	EPA 120.1
Sulfate	92.0	40	2.6	mg/l	4	03/06/07 18:00	EB	EPA 375.3
Sulfide	0.0 B	0.20		mg/l	1	03/01/07 12:10	LN	EPA 376.1
Total Organic Carbon	4.0	1.0	0.092	mg/l	1	02/28/07 09:08	LN	EPA 415.1/9060
pH	8.2			su	1	03/01/07 13:00	TW	EPA 150.1/9040

(a) Analysis performed at Accutest Laboratories, Orlando, FL.
(b) Calculated as: (Nitrogen, Nitrate + Nitrite) - (Nitrogen, Nitrite)

RL = Reporting Limit
MDL = Method Detection Limit
U = Indicates a result < MDL
B = Indicates a result > = MDL but < RL

Accutest LabLink@31214 11:24 08-May-2008

Report of Analysis

Client Sample ID:	TRIP BLANK		
Lab Sample ID:	T16445-15	**Date Sampled:**	02/22/07
Matrix:	AQ - Trip Blank Water	**Date Received:**	02/24/07
Method:	SW846 8260B	**Percent Solids:**	n/a
Project:	Longhorn Army Ammunition Plant		

	File ID	DF	Analyzed	By	Prep Date	Prep Batch	Analytical Batch
Run #1	F0079185.D	1	03/07/07	LJ	n/a	n/a	VF2315
Run #2							

	Purge Volume
Run #1	5.0 ml
Run #2	

VOA TCL List

CAS No.	Compound	Result	RL	MDL	Units	Q
67-64-1	Acetone	2.8 U	50	2.8	ug/l	
71-43-2	Benzene	0.23 U	2.0	0.23	ug/l	
75-27-4	Bromodichloromethane	0.33 U	2.0	0.33	ug/l	
75-25-2	Bromoform	0.65 U	2.0	0.65	ug/l	
108-90-7	Chlorobenzene	0.54 U	2.0	0.54	ug/l	
75-00-3	Chloroethane	0.46 U	2.0	0.46	ug/l	
67-66-3	Chloroform	0.66 U	2.0	0.66	ug/l	
75-15-0	Carbon disulfide	0.62 U	2.0	0.62	ug/l	
56-23-5	Carbon tetrachloride	0.52 U	2.0	0.52	ug/l	
75-34-3	1,1-Dichloroethane	0.52 U	2.0	0.52	ug/l	
75-35-4	1,1-Dichloroethylene	0.68 U	2.0	0.68	ug/l	
107-06-2	1,2-Dichloroethane	0.53 U	2.0	0.53	ug/l	
78-87-5	1,2-Dichloropropane	0.59 U	2.0	0.59	ug/l	
124-48-1	Dibromochloromethane	0.68 U	2.0	0.68	ug/l	
156-59-2	cis-1,2-Dichloroethylene	0.83 U	2.0	0.83	ug/l	
10061-01-5	cis-1,3-Dichloropropene	0.59 U	2.0	0.59	ug/l	
156-60-5	trans-1,2-Dichloroethylene	0.75 U	2.0	0.75	ug/l	
10061-02-6	trans-1,3-Dichloropropene	0.61 U	2.0	0.61	ug/l	
100-41-4	Ethylbenzene	0.48 U	2.0	0.48	ug/l	
591-78-6	2-Hexanone	1.9 U	10	1.9	ug/l	
108-10-1	4-Methyl-2-pentanone	7.3 U	10	7.3	ug/l	
74-83-9	Methyl bromide	0.47 U	2.0	0.47	ug/l	
74-87-3	Methyl chloride	0.60 U	2.0	0.60	ug/l	
75-09-2	Methylene chloride	0.67 U	5.0	0.67	ug/l	
78-93-3	Methyl ethyl ketone	3.0 U	10	3.0	ug/l	
100-42-5	Styrene	0.50 U	2.0	0.50	ug/l	
71-55-6	1,1,1-Trichloroethane	0.37 U	2.0	0.37	ug/l	
79-34-5	1,1,2,2-Tetrachloroethane	0.46 U	2.0	0.46	ug/l	
79-00-5	1,1,2-Trichloroethane	0.66 U	2.0	0.66	ug/l	
127-18-4	Tetrachloroethylene	0.74 U	2.0	0.74	ug/l	
108-88-3	Toluene	0.54 U	2.0	0.54	ug/l	
79-01-6	Trichloroethylene	0.63 U	2.0	0.63	ug/l	

U = Not detected MDL - Method Detection Limit
RL = Reporting Limit
E = Indicates value exceeds calibration range
J = Indicates an estimated value
B = Indicates analyte found in associated method blank
N = Indicates presumptive evidence of a compound

Report of Analysis

Client Sample ID:	TRIP BLANK		
Lab Sample ID:	T16445-15	**Date Sampled:**	02/22/07
Matrix:	AQ - Trip Blank Water	**Date Received:**	02/24/07
Method:	SW846 8260B	**Percent Solids:**	n/a
Project:	Longhorn Army Ammunition Plant		

VOA TCL List

CAS No.	Compound	Result	RL	MDL	Units	Q
75-01-4	Vinyl chloride	0.32 U	2.0	0.32	ug/l	
1330-20-7	Xylene (total)	1.1 U	6.0	1.1	ug/l	

CAS No.	Surrogate Recoveries	Run# 1	Run# 2	Limits
1868-53-7	Dibromofluoromethane	106%		73-139%
17060-07-0	1,2-Dichloroethane-D4	102%		66-139%
2037-26-5	Toluene-D8	112%		77-148%
460-00-4	4-Bromofluorobenzene	131%		84-150%

U = Not detected MDL - Method Detection Limit
RL = Reporting Limit
E = Indicates value exceeds calibration range
J = Indicates an estimated value
B = Indicates analyte found in associated method blank
N = Indicates presumptive evidence of a compound

Report of Analysis

Client Sample ID:	17WW130-FEB2007		
Lab Sample ID:	T16445-18	**Date Sampled:**	02/23/07
Matrix:	AQ - Ground Water	**Date Received:**	02/24/07
Method:	SW846 8260B	**Percent Solids:**	n/a
Project:	Longhorn Army Ammunition Plant		

	File ID	DF	Analyzed	By	Prep Date	Prep Batch	Analytical Batch
Run #1	F0079203.D	1	03/08/07	LJ	n/a	n/a	VF2315
Run #2							

	Purge Volume
Run #1	5.0 ml
Run #2	

VOA TCL List

CAS No.	Compound	Result	RL	MDL	Units	Q
67-64-1	Acetone	2.8 U	50	2.8	ug/l	
71-43-2	Benzene	0.23 U	2.0	0.23	ug/l	
75-27-4	Bromodichloromethane	0.33 U	2.0	0.33	ug/l	
75-25-2	Bromoform	0.65 U	2.0	0.65	ug/l	
108-90-7	Chlorobenzene	0.54 U	2.0	0.54	ug/l	
75-00-3	Chloroethane	0.46 U	2.0	0.46	ug/l	
67-66-3	Chloroform	0.66 U	2.0	0.66	ug/l	
75-15-0	Carbon disulfide	0.62 U	2.0	0.62	ug/l	
56-23-5	Carbon tetrachloride	0.52 U	2.0	0.52	ug/l	
75-34-3	1,1-Dichloroethane	0.52 U	2.0	0.52	ug/l	
75-35-4	1,1-Dichloroethylene	0.68 U	2.0	0.68	ug/l	
107-06-2	1,2-Dichloroethane	4.9	2.0	0.53	ug/l	
78-87-5	1,2-Dichloropropane	0.59 U	2.0	0.59	ug/l	
124-48-1	Dibromochloromethane	0.68 U	2.0	0.68	ug/l	
156-59-2	cis-1,2-Dichloroethylene	0.83	2.0	0.83	ug/l	J
10061-01-5	cis-1,3-Dichloropropene	0.59 U	2.0	0.59	ug/l	
156-60-5	trans-1,2-Dichloroethylene	0.75 U	2.0	0.75	ug/l	
10061-02-6	trans-1,3-Dichloropropene	0.61 U	2.0	0.61	ug/l	
100-41-4	Ethylbenzene	0.48 U	2.0	0.48	ug/l	
591-78-6	2-Hexanone	1.9 U	10	1.9	ug/l	
108-10-1	4-Methyl-2-pentanone	7.3 U	10	7.3	ug/l	
74-83-9	Methyl bromide	0.47 U	2.0	0.47	ug/l	
74-87-3	Methyl chloride	0.60 U	2.0	0.60	ug/l	
75-09-2	Methylene chloride	0.67 U	5.0	0.67	ug/l	
78-93-3	Methyl ethyl ketone	3.0 U	10	3.0	ug/l	
100-42-5	Styrene	0.50 U	2.0	0.50	ug/l	
71-55-6	1,1,1-Trichloroethane	0.37 U	2.0	0.37	ug/l	
79-34-5	1,1,2,2-Tetrachloroethane	0.46 U	2.0	0.46	ug/l	
79-00-5	1,1,2-Trichloroethane	0.66 U	2.0	0.66	ug/l	
127-18-4	Tetrachloroethylene	0.74 U	2.0	0.74	ug/l	
108-88-3	Toluene	0.54 U	2.0	0.54	ug/l	
79-01-6	Trichloroethylene	25.1	2.0	0.63	ug/l	

U = Not detected MDL - Method Detection Limit
RL = Reporting Limit
E = Indicates value exceeds calibration range
J = Indicates an estimated value
B = Indicates analyte found in associated method blank
N = Indicates presumptive evidence of a compound

Report of Analysis

Client Sample ID:	17WW130-FEB2007		
Lab Sample ID:	T16445-18	**Date Sampled:**	02/23/07
Matrix:	AQ - Ground Water	**Date Received:**	02/24/07
Method:	SW846 8260B	**Percent Solids:**	n/a
Project:	Longhorn Army Ammunition Plant		

VOA TCL List

CAS No.	Compound	Result	RL	MDL	Units	Q
75-01-4	Vinyl chloride	0.32 U	2.0	0.32	ug/l	
1330-20-7	Xylene (total)	1.1 U	6.0	1.1	ug/l	

CAS No.	Surrogate Recoveries	Run# 1	Run# 2	Limits
1868-53-7	Dibromofluoromethane	105%		73-139%
17060-07-0	1,2-Dichloroethane-D4	102%		66-139%
2037-26-5	Toluene-D8	106%		77-148%
460-00-4	4-Bromofluorobenzene	116%		84-150%

U = Not detected MDL - Method Detection Limit
RL = Reporting Limit
E = Indicates value exceeds calibration range
J = Indicates an estimated value
B = Indicates analyte found in associated method blank
N = Indicates presumptive evidence of a compound

Accutest LabLink@31214 11:24 08-May-2008

Report of Analysis

Client Sample ID:	17WW130-FEB2007		
Lab Sample ID:	T16445-18	**Date Sampled:**	02/23/07
Matrix:	AQ - Ground Water	**Date Received:**	02/24/07
Method:	RSKSOP-147/175	**Percent Solids:**	n/a
Project:	Longhorn Army Ammunition Plant		

	File ID	DF	Analyzed	By	Prep Date	Prep Batch	Analytical Batch
Run #1 [a]	XY025271.D	1	03/01/07	AFL	n/a	n/a	F:GXY992
Run #2							

CAS No.	Compound	Result	RL	MDL	Units	Q
74-82-8	Methane	0.51	0.50	0.30	ug/l	
74-84-0	Ethane	0.60 U	1.0	0.60	ug/l	
74-85-1	Ethene	0.80 U	1.0	0.80	ug/l	

(a) Analysis performed at Accutest Laboratories, Orlando, FL.

U = Not detected MDL - Method Detection Limit
RL = Reporting Limit
E = Indicates value exceeds calibration range
J = Indicates an estimated value
B = Indicates analyte found in associated method blank
N = Indicates presumptive evidence of a compound

Accutest LabLink@31214 11:24 08-May-2008

Report of Analysis

Client Sample ID: 17WW130-FEB2007
Lab Sample ID: T16445-18
Matrix: AQ - Ground Water
Method: SW846 8330A SW846 3535A
Project: Longhorn Army Ammunition Plant

Date Sampled: 02/23/07
Date Received: 02/24/07
Percent Solids: n/a

	File ID	DF	Analyzed	By	Prep Date	Prep Batch	Analytical Batch
Run #1 [a]	GG020222.D	1	03/03/07	AFL	03/01/07	F:OP19677	F:GGG906
Run #2							

	Initial Volume	Final Volume
Run #1	1030 ml	10.0 ml
Run #2		

CAS No.	Compound	Result	RL	MDL	Units	Q
2691-41-0	HMX	0.058 U	0.19	0.058	ug/l	
121-82-4	RDX	0.073 U	0.19	0.073	ug/l	
99-65-0	1,3-Dinitrobenzene	0.068 U	0.19	0.068	ug/l	
606-20-2	2,6-Dinitrotoluene	0.063 U	0.19	0.063	ug/l	
121-14-2	2,4-Dinitrotoluene	0.073 U	0.19	0.073	ug/l	
35572-78-2	2-amino-4,6-Dinitrotoluene	0.068 U	0.19	0.068	ug/l	
19406-51-0	4-amino-2,6-Dinitrotoluene	0.078 U	0.19	0.078	ug/l	
98-95-3	Nitrobenzene	0.058 U	0.19	0.058	ug/l	
88-72-2	o-Nitrotoluene	0.058 U	0.19	0.058	ug/l	
99-08-1	m-Nitrotoluene	0.073 U	0.19	0.073	ug/l	
99-99-0	p-Nitrotoluene	0.073 U	0.19	0.073	ug/l	
479-45-8	Tetryl	0.073 U	0.19	0.073	ug/l	
99-35-4	1,3,5-Trinitrobenzene	0.092 U	0.19	0.092	ug/l	
118-96-7	2,4,6-Trinitrotoluene	0.078 U	0.19	0.078	ug/l	

CAS No.	Surrogate Recoveries	Run# 1	Run# 2	Limits
610-39-9	3,4-Dinitrotoluene	106%		70-136%

(a) Analysis performed at Accutest Laboratories, Orlando, FL.

U = Not detected MDL - Method Detection Limit
RL = Reporting Limit
E = Indicates value exceeds calibration range
J = Indicates an estimated value
B = Indicates analyte found in associated method blank
N = Indicates presumptive evidence of a compound

Accutest LabLink@31214 11:24 08-May-2008

Report of Analysis

Client Sample ID:	17WW130-FEB2007		
Lab Sample ID:	T16445-18	**Date Sampled:**	02/23/07
Matrix:	AQ - Ground Water	**Date Received:**	02/24/07
		Percent Solids:	n/a
Project:	Longhorn Army Ammunition Plant		

General Chemistry

Analyte	Result	RL	MDL	Units	DF	Analyzed	By	Method
Perchlorate by IC								
Perchlorate [a]	4.0 U	10	4.0	ug/l	1	03/02/07 19:51	AFL	EPA 314
Alkalinity, Total as CaCO3	567	25	0.30	mg/l	5	03/08/07 12:50	EB	EPA 310.1
Carbon Dioxide	228	5.0		mg/l	1	03/12/07	RM	SM18 4500CO2D
Chloride	1030	50	0.57	mg/l	50	03/05/07 12:15	EB	EPA 325.3
Nitrogen, Nitrate [b]	2.7	0.55	0.0050	mg/l	1	02/26/07 14:00	LN	SM18 4500NO3E/NO2B
Nitrogen, Nitrate + Nitrite	2.7	0.50	0.0050	mg/l	10	02/26/07 13:03	LN	EPA 353.2
Nitrogen, Nitrite	0.0030 U	0.050	0.0030	mg/l	1	02/26/07 14:00	LN	EPA 353.2
Specific Conductivity [a]	4140	0.50	0.50	umhos/cm	1	03/06/07	AFL	EPA 120.1
Sulfate	173	40	2.6	mg/l	4	03/06/07 18:00	EB	EPA 375.3
Sulfide	0.0 B	0.20		mg/l	1	03/01/07 12:10	LN	EPA 376.1
Total Organic Carbon	6.0	1.0	0.092	mg/l	1	02/27/07 09:10	LN	EPA 415.1/9060
pH	6.7			su	1	03/01/07 13:00	TW	EPA 150.1/9040

(a) Analysis performed at Accutest Laboratories, Orlando, FL.
(b) Calculated as: (Nitrogen, Nitrate + Nitrite) - (Nitrogen, Nitrite)

RL = Reporting Limit
MDL = Method Detection Limit
U = Indicates a result < MDL
B = Indicates a result > = MDL but < RL

Misc. Forms

Custody Documents and Other Forms

Includes the following where applicable:

- Chain of Custody
- LRC Form

T16445

00096350

Shaw® Shaw Environmental, Inc.

3010 Briarpark Drive, Suite 4N
Houston, TX 77042 (713) 996-4400

CHAIN-OF-CUSTODY

No. 10494

Laboratory Name: Accutest Address: 10165 HARWIN DR. #150 HOUSTON, TX 77036 Contact: AGNES 713-271-4700

Project Name: LONGHORN ARMY AMMUNITION PLANT Project Location: KARNACK, TX

Project No.: 117591 Project Contact: KAY EVERETTE Project Telephone No.: 713-996-4421

Point of contact: DIANE MEYER Telephone No.: 713-996-4408

Project Manager/Supervisor: PRAVEEN SRIVASTAV

Analysis and Method Desired (Indicate separate containers)

Item No.	Sample Number	Date	Time	Comp	Grab	Matrix	Sample Description, Location	Number of Containers	8260B VOC	SM4500S2F 300 ANIONS	376.2 Sulfides	314.0 Perchlorate SOP175	CO2 GASES	310.1 ALKALINITY	415.1 TOC	Explosives	Remarks
1	29WW38-Feb2007	2-22 07	0930		✓	W	Site 29, GW	3	✓								
2	29WW38-Feb2007	2-22 07	0930		✓	W	Site 29, GW	3					✓				
3	29WW38-Feb2007	2-22 07	0930		✓	W	Site 29, GW	3							✓		
4	29WW38-Feb2007	2-22 07	0930		✓	W	Site 29, GW	1		✓							
5	29WW38-Feb2007	2-22 07	0930		✓	W	Site 29, GW	1			✓						
6	29WW38-Feb2007	2-22 07	0930		✓	W	Site 29, GW	1				✓					
7	29WW38-Feb2007	2-22 07	0930		✓	W	Site 29, GW	1						✓			
8	29WW38-Feb2007	2-22 07	0930		✓	W	Site 29, GW	2								✓	
9																	
10																	

Transfers Relinquished By (Signature)	Date/Time	Transfers Accepted By (Signature)	Date/Time	Special Instructions
Sherry McAdoo	2-22-07 1900	Scott Beesinger	2/22/07 17:00	WB
Scott Beesinger	2/23/07 08:30			FedEx Airbill No.:
		Laboratory: A. Rodriguez	2/24/07 11:15	Sampler's Signature: Sherry McAdoo

TAT: ____ Standard ____ Rush Due: ____ Seals Intact? ✓ Y ____ N Received Good Condition ____ Y ____ N ____ Cold

White - Lab Copy Canary - Field Copy Pink - File Copy

T16445: Chain of Custody
Page 1 of 10

T16445

00096351

Shaw® Shaw Environmental, Inc.

3010 Briarpark Drive, Suite 4N
Houston, TX 77042 (713) 996-4400

CHAIN-OF-CUSTODY

No. 10928

Laboratory Name: ACCUTEST Address: 10165 Harwin DR #150 HOUSTON, TX. 77036 Contact: AGNES: 713-271-4700

Project Name: LONGHORN ARMY AMMUNITION PLANT Project Location: KARNACK, TX

Project No.: 117591 Project Contact: KAY EVERETTE Project Telephone No.: 713-996-4421

Point of contact: DIANE Meyer Telephone No.: 713-996-4408

Project Manager/Supervisor: PRAVEEN SRIVASTAV

Item No.	Sample Number	Date	Time	Comp	Grab	Matrix	Sample Description, Location	Number of Containers	VOCs 8260	Anions 300 Anions	Sulfides 376.2	Perchlorate 314	Gases 175	Alkalinity 310.1	TOC 415.1	Remarks
1	47WW30-FEB2007	2/22/07	0941		X	GW	47WW30	13	X	X	X	X	X	X	X	
2	LHS MW43-FEB2007	2/22/07	1100		X	GW	LHS MW43	13	X	X	X	X	X	X	X	
3	SDWW06-FEB2007	2/22/07	1530		X	GW	SDWW06	13	X	X	X	X	X	X	X	
4																
5																
6																
7																
8																
9																
10																

Transfers Relinquished By (Signature)	Date/Time	Transfers Accepted By (Signature)	Date/Time	Special Instructions
J. Rutherford	2/22/07 @1800	Scott Beesinger	2/23/07 18:00	UPS
Scott Beesinger	2/23/07 08:30			FedEx Airbill No.:
		Laboratory A. Rodriguez	2/24/07 11:15	Sampler's Signature J. Rutherford

TAT: ____ Standard ____ Rush Due: ___ Seals Intact? ____Y ____N Received Good Condition ____ Y ____N ____ Cold

White - Lab Copy Canary - Field Copy Pink - File Copy

T16445

00096352

Shaw® Shaw Environmental, Inc.

3010 Briarpark Drive, Suite 4N
Houston, TX 77042 (713) 996-4400

CHAIN-OF-CUSTODY

No. 10918

Laboratory Name: Accu Test Address: 10165 Harwin dr. #150 Houston, TX. 77036 Contact: Agnes - 713-271-4700

Project Name: Longhorn Army Ammunition Plant Project Location: Karnack, TX

Project No.: 117591 Project Contact: Ray Burnette Project Telephone No.: 713-996-4421

Point of contact: Diane Meyer Telephone No.: 713-996-4408

Project Manager/Supervisor: Praveen Srivastav

Analysis and Method Desired (Indicate separate containers)

Item No.	Sample Number	Date	Time	Comp	Grab	Matrix	Sample Description, Location	Number of Containers	Voc's 8260	Anions 300	Sulfides 376.2	Perchlorate 314	Gases 175	Alkalinity 310.1	TOC 415.1	Remarks
5 1	SDWW05-FEB2007	2/23/07	1046		X	GW	SDWW05	13	X	X	X	X	X	X	X	ms/msd Included
6 2	SDWW02-FEB2007	2/23/07	1453		X	GW	SDWW02	13	X	X	X	X	X	X	X	
3																
4																
5																
6																
7																
8																
9																
10																

Transfers Relinquished By (Signature)	Date/Time	Transfers Accepted By (Signature)	Date/Time	Special Instructions
J. Bell	2/23/07 @ 1800	Scott Beesinger	2/23/07 18:00	UPS
Scott Beesinger	2/23/07 1800			FedEx Airbill No.:
		Laboratory A. Rodriguez	2/24/07 11:15	Sampler's Signature: J. Bell

TAT: ____ Standard ____ Rush Due: ___ Seals Intact? ___ Y ____ N Received Good Condition ____ Y ____ N ____ Cold

White - Lab Copy Canary - Field Copy Pink - File Copy

4.1 4

T16445: Chain of Custody
Page 3 of 10

T16445

00096353

Shaw® Shaw Environmental, Inc.

3010 Briarpark Drive, Suite 4N
Houston, TX 77042 (713) 996-4400

CHAIN-OF-CUSTODY

No. 10930

Laboratory Name: Accutest
Address: 10165 Harwin #150 Houston TX 77036
Contact: Agnes (713) 271 4700

Project Name: LHAAP
Project Location: Karnack, TX
Project No.: 117591
Project Contact: K. Everette
Project Telephone No.: (713) 996 ~~4422~~ 4421
Point of contact: D. Meyers
Telephone No.: (713) 996-4408
Project Manager/Supervisor: P. Srivastav

Analysis and Method Desired (Indicate separate containers)

Item No.	Sample Number	Date	Time	Comp	Grab	Matrix	Sample Description, Location	Number of Containers	VOC 8260	Anions 300	Sulfides 376.2	Perchlorate 314	Gases 175	Alkalinity 310.1	TOC 415.1	Explosives 8330	Remarks
7 1	17WW16-Feb2007	2-22 07	1030		✓	W	GW, Site 17	15	3	1	1	1	3	1	3	2	
8 2	17WW02-Feb2007	2-22 07	1418 ~~1030~~	Stm:	✓	W	GW, Site 17	15	3	1	1	1	3	1	3	2	
9 3	17WW02-Feb2007	2-22 07	1418		✓	W	GW, Site 17	15	3	1	1	1	3	1	3	2	FD
4																	
5																	
6																	
7																	
8																	
9																	
10																	

Transfers Relinquished By (Signature)	Date/Time	Transfers Accepted By (Signature)	Date/Time
[signature]	2/23/07 8:22	Scott Beesinger	2/23/07 08:22
Scott Beesinger	2/23/07 8:30		
		Laboratory A. Rodney	2/24/07 11:15

Special Instructions: UPS
FedEx Airbill No.:
Sampler's Signature: [signature]

TAT: X Standard ____ Rush Due: ____
Seals Intact? ✓ Y ____ N
Received Good Condition ____ Y ____ N ____ Cold

White - Lab Copy Canary - Field Copy Pink - File Copy

4.1

4

T16445: Chain of Custody
Page 4 of 10

T16445

00096354

Shaw® Shaw Environmental, Inc.

3010 Briarpark Drive, Suite 4N
Houston, TX 77042 (713) 996-4400

CHAIN-OF-CUSTODY

No. 10957

Laboratory Name: Accutest
Address: 10165 HARWIN DR #150 Houston, TX 77036
Contact: Agnes 713-271-4700

Project Name: Longhorn Army Ammunition Plant
Project Location: KARNACK TX
Project No.: 117591
Project Contact: Kay Everette
Project Telephone No.: 713-996-4421
Point of contact: Diane Meyer
Telephone No.: 713-996-4408
Project Manager/Supervisor: Praveen Srivastav

Analysis and Method Desired (Indicate separate containers)

Item No.	Sample Number	Date	Time	Comp	Grab	Matrix	Sample Description, Location	Number of Containers: VOC 8260B	SOP175 Gases-CO2	415.1 TOC	300.0 Anions	376.2 Sulfides	314.0 Perchlorate	310.1 Alkalinity	Explosives	Remarks
10	29WW35-Feb2007	2-22-07	1245		✓	W	Site 29, GW (15)	3	3	3	1	1	1	1	2	15 containers
11	29WW35-Feb2007-FD	2-22-07	1245		✓	W	Site 29, GW (15)	3	3	3	1	1	1	1	2	FDs
12	29WW06-Feb2007	2-22-07	1500		✓	W	Site 29, GW (15)	3	3	3	1	1	1	1	2	15 containers
4																
5																
6																
7																
8																
9																
10																

Transfers Relinquished By (Signature)	Date/Time	Transfers Accepted By (Signature)	Date/Time
Sherry McAdoo	2-22-07 1700	Scott Beesinger	2/22/07 17:00
Scott Beesinger	2/23/07 08:30		
		Laboratory A. Rodney	2/24/07 11:15

Special Instructions: WB
FedEx Airbill No.:
Sampler's Signature: Sherry McAdoo

TAT: ____ Standard ____ Rush Due: ____ Seals Intact? ✓ Y ____ N Received Good Condition ✓ Y ____ N ✓ Cold

White - Lab Copy Canary - Field Copy Pink - File Copy

4.1

4

T16445: Chain of Custody
Page 5 of 10

T16445

00096355

Shaw® Shaw Environmental, Inc.

3010 Briarpark Drive, Suite 4N
Houston, TX 77042 (713) 996-4400

CHAIN-OF-CUSTODY

No. 10956

Laboratory Name: Accutest Address: 10165 HARWIN DR. #150 HOUSTON, TX 77036 Contact: AGNES 713-271-4700

Project Name: LONGHORN ARMY AMMUNITION PLANT Project Location: HARNACK, TX

Project No.: 117591 Project Contact: KAY EVERETTE Project Telephone No.: 713-996-4421

Point of contact: DIANE MEYER Telephone No.: 713-996-4408

Project Manager/Supervisor: PRAVEEN SRIVASTAV

Item No.	Sample Number	Date	Time	Comp	Grab	Matrix	Sample Description, Location	Number of Containers	8260B VOC	SOP175 GASES-CO2	TOC 415.1	300.0 ANIONS	376.2 Sulfides	314.0 Perchlorate	Explosives	ALKALINITY
13	17WW05-FEB2007	2/23/07	1533		✓	W	GW 17WW05	15	3	3	3	1	1	1	2	1
14	17WW06-FEB2007	2/23/07	16:36		✓	W	GW 17WW06	14	3	3	3	1	1	1	1	1
15	3	TB-AR-2-2407														
16	4	"	"													
17	5	"	"													
	6															
	7															
18	17WW130-FEB2007	2/23	10:47			AR	2-26-07									
	9															
	10															

Transfers Relinquished By (Signature)	Date/Time	Transfers Accepted By (Signature)	Date/Time
M. Hall	2/23/07 17:00	Scott Beesley	2/23/07 17:00
Scott Beesley	2/23/07 1715		
		Laboratory A. Rodriguez	2/24/07 11:15

Special Instructions: UR

FedEx Airbill No.:

Sampler's Signature: M. Hall

TAT: ____ Standard ____ Rush Due: ____ Seals Intact? ____ Y ____ N Received Good Condition ____ Y ____ N Cold

White - Lab Copy Canary - Field Copy Pink - File Copy

4.1 4

00096356

ACCUTEST

VARIANCE MEMO
SAMPLE LOG-IN

SAMPLE(S) various DATE 2/24/07
PROJECT LHAAP
FILED BY AR LAB NO. T16445

VARIANCE - Check applicable items(s):

_____ Insufficient sample sent for proper analysis; received approx. _____
_____ Sample bottle received broken and/or cap not intact.
_____ Samples received without paperwork; paperwork received without samples.
X Samples received without proper refrigeration, when it has been deemed necessary. Temperature at receipt: 11.0 & 1 cooler
_____ Illegible sample number or label missing from bottle.
_____ Numbers on sample not the same as numbers on paper work.
_____ Incomplete instructions received with sample(s) ie.,no request for analysis, no chain of custody, incomplete billing instructions, no due date, etc. Temperature at reciept: _____
_____ Samples received in improper container or lacking proper preservation.
_____ Physical characteristics different than those on sampling sheets; Describe: _____
_____ Rush samples on hold because of incomplete paperwork.
_____ Other (specify) #11 - rec'd. w/ one Explosive container not two. #9. Had NO Explosive containers. #18-17 WW130 FEB 2007 was an extra sample rec'd. & not on the COC. See attached list of samples received out of temp.

CORRECTIVE ACTION TAKEN

DIANE M. Person Contacted _____ By phone.
_____ Client informed verbally. _____ Samples processed for information only and noted on report.
_____ Client informed by ~~memo/letter~~. EMAIL
_____ Samples processed as is. _____ Samples processed with higher detection limits accepted.
_____ Samples preserved by lab.
_____ Client will resample and resubmit. _____ Samples rejected.

Notes: ANALYZE ALL SAMPLES OUT OF TEMP. -11) OK, -9) OK
18) ANALYZE ALL SHORT HOLDS. PLACE ON HOLD.
ANALYZE 5x18 PER DIANE 2/26/A AVS

ROUTING

TITLE	DATE	INITIALS	CORRECTED?
Sample Manager:			
Login:			
Project Manager:	2/26/A	AVS	
Comments:			

Form: SM006

T16445: Chain of Custody
Page 7 of 10

00096357

Samples out of temp.: 11.0°

#2- 47WW30- FEB 2007 - 2/22/07 @ 09:41
2 - Plastic 1000 ml's unpreserved.

#7 - 17WW16 -FEB 2007 - 2/22/07 @ 10:30.
1- Plastic 1000 ml unpreserved

#8- 17WW02 - FEB 2007 2/22/07 @ 14:18.
2. Plastic 1000 ml's unpreserved
1- Plastic 500 ml w/ NaOH & Zinc Acetate

#9- 17 WW02 - FEB 2007 2/22/07@14:18- FD
2 - Plastic 1000 ml unpreserved.

#10- 29 WW35 - FEB 2007 2/22/07 @ 12:45.
2- Plastic 1000 ml's unpreserved.
1- Plastic 500 ml unpreserved.

#11 29WW35 - FEB 2007 - FD 2/22/07 @ 12:45.
2- Plastic 1000 ml's unpreserved.
1- Plastic 500 ml w/ NaOH & Zinc Acetate

#12- 29 WW06 - FEB 2007 2/22/07 @ 15:00.
2- Plastic 1000 ml's unpreserved.
1- Plastic 500 ml. w/ NaOH & Zinc Acetate.

4.1 4

T16445: Chain of Custody
Page 8 of 10

90 of 189
ACCUTEST. Laboratories
T16445

00096358

ACCUTEST.

SAMPLE RECEIPT LOG

JOB #: T16445 DATE/TIME RECEIVED: 2/24/07 / 11:15

CLIENT: Shaw INITIALS: AR

Condition/Variance (Circle "Y" for yes and "N" for no or NA. If "N" is circled, see variance for explanation):

1. (Y) N Sample received in undamaged condition.
2. (Y) (N) Samples received within temp. range.
3. (Y) N Sample received with proper pH.
4. (Y) N Sample received in proper containers.
5. (Y) N Sample volume sufficient for analysis.
6. (Y) N Sample received with chain of custody.
7. (Y) N Chain of Custody matches **sample IDs and analysis** on containers.
8. (Y) N Samples Headspace acceptable
9. (Y) N NA Custody seal received intact and tamper not evident on cooler.
10. Y N (NA) Custody seal received intact and tamper not evident on bottles.

SAMPLE or FIELD ID	BOTTLE #	DATE SAMPLED	MATRIX	VOLUME	LOCATION	PRESERV.	PH
1,2,3,4,7,8,9,10,11,14,15,16,18	1-3	2/22	AQ	40ml.	VREF	1,2,3,4,5,6	U, <2, >12, NA
1	4-6	"	"	"	SUB	1,2,3,4,5,6	U, <2, >12, NA
1	7-9	"	"	"	2K, 2L	1,2,3,4,5,6	U, <2, >12, NA
1	10-12	"	"	P1000	"	(1),2,3,4,5,6	(U), <2, >12, NA
1,2,3,4,7,8,18	13	"	"	P500	"	1,2,3,4,(5),6	U, (<2), >12, NA
1,8,18	14-15	"	"	P1000	SUB	(1),2,3,4,5,6	(U), <2, >12, NA
5	1-9	2/23	"	40ml.	VREF	1,2,3,4,5,6	U, <2, >12, NA
"	10-18	"	"	"	SUB	1,2,3,4,5,6	U, <2, >12, NA
"	19-27	"	"	"	2K, 2L	1,2,3,4,5,6	U, <2, >12, NA
"	28-32	"	"	P1000	"	(1),2,3,4,5,6	(U), <2, >12, NA
"	33-35	"	"	P500	"	(1),2,3,4,5,6	(U), <2, >12, NA
"	36-38	"	"	"	"	1,2,3,4,(5),6	U, (<2), >12, NA
4	1-3	"	"	40ml.	VREF	1,2,3,4,5,6	U, <2, >12, NA
"	4-6	"	"	"	SUB	1,2,3,4,5,6	U, <2, >12, NA
"	7-9	"	"	"	2K, 2L	1,2,3,4,5,6	U, <2, >12, NA
"	10-11	"	"	P1000	"	(1),2,3,4,5,6	(U), <2, >12, NA

LOCATION: WI: Walk-in VR: Volatile Refrig. SUB: Subcontract EF: Encore Freezer

PRESERVATIVES: 1: None 2: HCL 3: HNO3 4: H2SO4 5: NAOH 6: Other

~~pH of waters checked excluding volatiles~~

pH of soils N/A

Comments:

Delivery method: Courier: FE

COOLER TEMP: 11.0 COOLER TEMP: 3.6

COOLER TEMP: 3.0 COOLER TEMP: 2.0

Form: SM012, Rev.07/28/06, QAO

4.1 4

T16445: Chain of Custody

Page 9 of 10

91 of 189

ACCUTEST. Laboratories

T16445

00096359

ACCUTEST.

SAMPLE RECEIPT LOG

JOB #: T16445 DATE/TIME RECEIVED: 2/24/07 / 11:15

CLIENT: Shaw INITIALS: AR

Condition/Variance (Circle "Y" for yes and "N" for no or NA. If "N" is circled, see variance for explanation):

1. (Y) N Sample received in undamaged condition.
2. (Y) N Samples received within temp. range.
3. (Y) N Sample received with proper pH.
4. (Y) N Sample received in proper containers.
5. (Y) N Sample volume sufficient for analysis.
6. (Y) N Sample received with chain of custody.
7. (Y) N Chain of Custody matches **sample IDs and analysis** on containers.
8. (Y) N Samples Headspace acceptable
9. (Y) N NA Custody seal received intact and tamper not evident on cooler.
10. Y N (NA) Custody seal received intact and tamper not evident on bottles.

SAMPLE or FIELD ID	BOTTLE #	DATE SAMPLED	MATRIX	VOLUME	LOCATION	PRESERV.	PH
6	12	2/23	AQ	P500	2K, 2L	(1),2,3,4,5,6	(U), <2, >12, NA
6	13	"		"	"	1,2,3,4,(5),6	U, (2), >12, NA
7	10	2/22		P1000	2K, 2L	(1),2,3,4,5,6	(U), <2, >12, NA
7	11			P500		(1),2,3,4,5,6	(U), <2, >12, NA
7	12			"	"	1,2,3,4,(5),6	U, (2), >12, NA
7	13-15			A1000	SUB	(1),2,3,4,5,6	(U), <2, >12, NA
10	10-12			P1000	2K, 2L	(1),2,3,4,5,6	(U), <2, >12, NA
10	13			P500	"	(1),2,3,4,5,6	(U), <2, >12, NA
10	14-15			A1000	SUB	(1),2,3,4,5,6	U, <2, >12, NA
11	14			"	"	(1),2,3,4,5,6	(U), <2, >12, NA
13	10			P1000	2K, 2L	(1),2,3,4,5,6	(U), <2, >12, NA
"	11-12			P500		(1),2,3,4,5,6	(U), <2, >12, NA
	13			"	"	1,2,3,4,(5),6	U, (2), >12, NA
"	14-15			A1000	SUB	(1),2,3,4,5,6	(U), <2, >12, NA
14	14	"	"	A1000	SUB	(1),2,3,4,5,6	(U), <2, >12, NA
15-17	1-2	NA	AQ	40ml	VBEF	1,(2),3,4,5,6	U, <2, >12, NA

LOCATION: WI: Walk-In VR: Volatile Refrig. SUB: Subcontract EF: Encore Freezer

PRESERVATIVES: 1: None 2: HCL 3: HNO3 4: H2SO4 5: NAOH 6: Other

Comments:

~~pH of waters checked excluding volatiles~~
pH of soils N/A

Delivery method: Courier: FE

COOLER TEMP: 2.4 COOLER TEMP: 2.1

COOLER TEMP: COOLER TEMP:

Form: SM012, Rev.07/28/06, QAO

4.1 4

T16445: Chain of Custody
Page 10 of 10

92 of 189

ACCUTEST. Laboratories T16445

Appendix A Laboratory Data Package Cover Page

This data package consists of:

- ☐ This signature page, the laboratory review checklist, and the following reportable data:
- ☐ R1 Field chain-of-custody documentation;
- ☐ R2 Sample identification cross-reference;
- ☐ R3 Test reports (analytical data sheets) for each environmental sample that includes:
  - a) Items consistent with NELAC 5.13 or ISO/IEC 17025 Section 5.10
  - b) dilution factors,
  - c) preparation methods,
  - d) cleanup methods, and
  - e) if required for the project, tentatively identified compounds (TICs).
- ☐ R4 Surrogate recovery data including:
  - a) Calculated recovery (%R), and
  - b) The laboratory's surrogate QC limits.
- ☐ R5 Test reports/summary forms for blank samples;
- ☐ R6 Test reports/summary forms for laboratory control samples (LCSs) including:
  - a) LCS spiking amounts,
  - b) Calculated %R for each analyte, and
  - c) The laboratory's LCS QC limits.
- ☐ R7 Test reports for project matrix spike/matrix spike duplicates (MS/MSDs) including:
  - a) Samples associated with the MS/MSD clearly identified,
  - b) MS/MSD spiking amounts,
  - c) Concentration of each MS/MSD analyte measured in the parent and spiked samples,
  - d) Calculated %Rs and relative percent differences (RPDs), and
  - e) The laboratory's MS/MSD QC limits
- ☐ R8 Laboratory analytical duplicate (if applicable) recovery and precision:
  - a) the amount of analyte measured in the duplicate,
  - b) the calculated RPD, and
  - c) the laboratory's QC limits for analytical duplicates.
- ☐ R9 List of method quantitation limits (MQLs) for each analyte for each method and matrix;
- ☐ R10 Other problems or anomalies.
- ☐ The Exception Report for every "No" or "Not Reviewed (NR)" item in laboratory review checklist.

Release Statement: I am responsible for the release of this laboratory data package. This data package has been reviewed by the laboratory and is complete and technically compliant with the requirements of the methods used, except where noted by the laboratory in the attached exception reports. By me signature below, I affirm to the best of my knowledge, all problems/anomalies, observed by the laboratory as having the potential to affect the quality of the data, have been identified by the laboratory in the Laboratory Review Checklist, and no information or data have been knowingly withheld that would affect the quality of the data.

Check, if applicable: [ ] This laboratory is an in-house laboratory controlled by the person responding to rule. The official signing the cover page of the rule-required report (for example, the APAR) in which these data are used is responsible for releasing this data package and is by signature affirming the above release statement is true.

Ron Martino		Lab Director	3/19/2007
Name (Printed)	Signature	Official Title (printed)	Date

1. Items identified by the letter "R" must be included in the laboratory data package submitted in the TRRP-required report(s). Items identified by the letter "S" should be retained and made available upon request for the appropriate retention period.

Appendix A (cont'd): Laboratory Review Checklist: Reportable Data

Laboratory Name: Accutest Laboratories Gulf Coast	LRC Date: 3/19/2007
Project Name: Longhorn	Laboratory Job Number: T16445
Reviewer Name: Ron Martino	Prep Batch Number(s):

#[1]	A[2]	Description	Yes	No	NA[3]	NR[4]	ER#[5]
		Chain-of-custody (C-O-C)					
R1	OI	Did samples meet the laboratory's standard conditions of sample acceptability upon receipt?	X				
		Were all departures from standard conditions described in an exception report?	X				
R2	OI	**Sample and quality control (QC) identification**					
		Are all field sample ID numbers cross-referenced to the laboratory ID numbers?	X				
		Are all laboratory ID numbers cross-referenced to the corresponding QC data?	X				
R3	OI	**Test reports**					
		Were all samples prepared and analyzed within holding times?	X				
		Other than those results < MQL, were all other raw values bracketed by calibration standards?	X				
		Were calculations checked by a peer or supervisor?	X				
		Were all analyte identifications checked by a peer or supervisor?	X				
		Were sample quantitation limits reported for all analytes not detected?	X				
		Were all results for soil and sediment samples reported on a dry weight basis?			X		
		Were % moisture (or solids) reported for all soil and sediment samples?			X		
		If required for the project, TICs reported?			X		
R4	O	**Surrogate recovery data**					
		Were surrogates added prior to extraction?	X				
		Were surrogate percent recoveries in all samples within the laboratory QC limits?	X				
R5	OI	**Test reports/summary forms for blank samples**					
		Were appropriate type(s) of blanks analyzed?	X				
		Were blanks analyzed at the appropriate frequency?	X				
		Were method blanks taken through the entire analytical process, including preparation and, if applicable, cleanup procedures?	X				
		Were blank concentrations < MQL?	X				
R6	OI	**Laboratory control samples (LCS):**					
		Were all COCs included in the LCS?	X				
		Was each LCS taken through the entire analytical procedure, including prep and cleanup steps?	X				
		Were LCSs analyzed at the required frequency?	X				
		Were LCS (and LCSD, if applicable) %Rs within the laboratory QC limits?	X				
		Does the detectability data document the laboratory's capability to detect the COCs at the MDL used to calculate the SQLs?	X				
		Was the LCSD RPD within QC limits?			X		
R7	OI	**Matrix spike (MS) and matrix spike duplicate (MSD) data**					
		Were the project/method specified analytes included in the MS and MSD?	X				
		Were MS/MSD analyzed at the appropriate frequency?	X				
		Were MS (and MSD, if applicable) %Rs within the laboratory QC limits?		X			2
		Were MS/MSD RPDs within laboratory QC limits?	X				
R8	OI	**Analytical duplicate data**					
		Were appropriate analytical duplicates analyzed for each matrix?	X				
		Were analytical duplicates analyzed at the appropriate frequency?	X				
		Were RPDs or relative standard deviations within the laboratory QC limits?	X				
R9	OI	**Method quantitation limits (MQLs):**					
		Are the MQLs for each method analyte included in the laboratory data package?	**X**				
		Do the MQLs correspond to the concentration of the lowest non-zero calibration standard?	**X**				
		Are unadjusted MQLs included in the laboratory data package?	X				
R10	OI	**Other problems/anomalies**					
		Are all known problems/anomalies/special conditions noted in this LRC and ER?	**X**				
		Were all necessary corrective actions performed for the reported data?	**X**				

2. = organic analyses; I = inorganic analyses (and general chemistry, when applicable);
3. NA = Not applicable;
4. NR = Not reviewed;
5. ER# = Exception Report identification number (an Exception Report should be completed for an item if "NR" or "No" is checked).

Appendix A (cont'd): Laboratory Review Checklist: Reportable Data

Laboratory Name: Accutest Laboratories Gulf Coast	LRC Date: 3/19/2007
Project Name: Longhorn	Laboratory Job Number: T16445
Reviewer Name: Ron Martino	Prep Batch Number(s):

#[1]	A[2]	Description	Yes	No	NA[3]	NR[4]	ER#[5]
S1	OI	**Initial calibration (ICAL)**					
		Were response factors and/or relative response factors for each analyte within QC limits?	X				
		Were percent RSDs or correlation coefficient criteria met?	X				
		Was the number of standards recommended in the method used for all analytes?	X				
		Were all points generated between the lowest and highest standard used to calculate the curve?	X				
		Are ICAL data available for all instruments used?	X				
		Has the initial calibration curve been verified using an appropriate second source standard?	X				
S2	OI	**Initial and continuing calibration verification (ICCV and CCV) and continuing calibration**					
		Was the CCV analyzed at the method-required frequency?	X				
		Were percent differences for each analyte within the method-required QC limits?	X				
		Was the ICAL curve verified for each analyte?	X				
		Was the absolute value of the analyte concentration in the inorganic CCB < MDL?	X				
S3	O	**Mass spectral tuning:**					
		Was the appropriate compound for the method used for tuning?	X				
		Were ion abundance data within the method-required QC limits?	X				
S4	O	**Internal standards (IS):**					
		Were IS area counts and retention times within the method-required QC limits?	X				
S5	OI	**Raw data (NELAC section 1 appendix A glossary, and section 5.12 or ISO/IEC 17025 section**					
		Were the raw data (for example, chromatograms, spectral data) reviewed by an analyst?	X				
		Were data associated with manual integrations flagged on the raw data?	X				
S6	O	**Dual column confirmation**					
		Did dual column confirmation results meet the method-required QC?			X		
S7	O	**Tentatively identified compounds (TICs):**					
		If TICs were requested, were the mass spectra and TIC data subject to appropriate checks?			X		
S8	I	**Interference Check Sample (ICS) results:**					
		Were percent recoveries within method QC limits?			X		
	I	**Serial dilutions, post digestion spikes, and method of standard additions**					
		Were percent differences, recoveries, and the linearity within the QC limits specified in the method?			X		
S10	OI	**Method detection limit (MDL) studies**					
		Was a MDL study performed for each reported analyte?	X				
		Is the MDL either adjusted or supported by the analysis of DCSs?	X				
S11	OI	**Proficiency test reports:**					
		Was the laboratory's performance acceptable on the applicable proficiency tests or evaluation studies?	X				
S12	OI	**Standards documentation**					
		Are all standards used in the analyses NIST-traceable or obtained from other appropriate sources?	X				
S13	OI	**Compound/analyte identification procedures**					
		Are the procedures for compound/analyte identification documented?	X				
S14	OI	**Demonstration of analyst competency (DOC)**					
		Was DOC conducted consistent with NELAC Chapter 5C or ISO/IEC 4?	X				
		Is documentation of the analyst's competency up-to-date and on file?	X				
S15	OI	**Verification/validation documentation for methods** (NELAC Chap 5 or ISO/IEC 17025 Section 5)					
		Are all the methods used to generate the data documented, verified, and validated, where applicable?	X				
S16	OI	**Laboratory standard operating procedures (SOPs):**					
		Are laboratory SOPs current and on file for each method performed?	X				

1 Items identified by the letter "R" should be included in the laboratory data package submitted to the TCEQ in the TRRP-required report(s). Items identified by the letter "S" should be retained and made available upon request for the appropriate retention period.
2 O = organic analyses; I = inorganic analyses (and general chemistry, when applicable).
3 NA = Not applicable.
4 NR = Not Reviewed.
5 ER# = Exception Report identification number (an Exception Report should be completed for an item if "NR" or "No" is checked).

Appendix A (cont'd): Laboratory Review Checklist: Exception Reports	
Laboratory Name: Accutest Laboratories Gulf Coast	LRC Date: 3/19/2007
Project Name: Longhorn	Laboratory Job Number: T16445
Reviewer Name: Ron Martino	Prep Batch Number(s):

ER #[1]	DESCRIPTION
1	For reporting purposes, the MQL is defined in the report as the RL. The unadjusted MQL/RL is reported in the method blank. The SQL/MDL is defined in the report as the MDL.
2	All anomalies are discussed in the case narrative.

ER# = Exception Report identification number (an Exception Report should be completed for an item if "NR" or "No" is checked on the LRC)

GC/MS Volatiles

QC Data Summaries

Includes the following where applicable:

- Method Blank Summaries
- Blank Spike Summaries
- Matrix Spike and Duplicate Summaries
- Instrument Performance Checks (BFB)
- Internal Standard Area Summaries
- Surrogate Recovery Summaries
- Initial and Continuing Calibration Summaries

Method Blank Summary

Job Number: T16445
Account: ITTXHO Shaw E & I, Inc.
Project: Longhorn Army Ammunition Plant

Sample	File ID	DF	Analyzed	By	Prep Date	Prep Batch	Analytical Batch
VF2314-MB	F0079164.D	1	03/07/07	LJ	n/a	n/a	VF2314

The QC reported here applies to the following samples: **Method:** SW846 8260B

T16445-1, T16445-2, T16445-5

CAS No.	Compound	Result	RL	MDL	Units	Q
67-64-1	Acetone	ND	50	2.8	ug/l	
71-43-2	Benzene	ND	2.0	0.23	ug/l	
75-27-4	Bromodichloromethane	ND	2.0	0.33	ug/l	
75-25-2	Bromoform	ND	2.0	0.65	ug/l	
108-90-7	Chlorobenzene	ND	2.0	0.54	ug/l	
75-00-3	Chloroethane	ND	2.0	0.46	ug/l	
67-66-3	Chloroform	ND	2.0	0.66	ug/l	
75-15-0	Carbon disulfide	ND	2.0	0.62	ug/l	
56-23-5	Carbon tetrachloride	ND	2.0	0.52	ug/l	
75-34-3	1,1-Dichloroethane	ND	2.0	0.52	ug/l	
75-35-4	1,1-Dichloroethylene	ND	2.0	0.68	ug/l	
107-06-2	1,2-Dichloroethane	ND	2.0	0.53	ug/l	
78-87-5	1,2-Dichloropropane	ND	2.0	0.59	ug/l	
124-48-1	Dibromochloromethane	ND	2.0	0.68	ug/l	
156-59-2	cis-1,2-Dichloroethylene	ND	2.0	0.83	ug/l	
10061-01-5	cis-1,3-Dichloropropene	ND	2.0	0.59	ug/l	
156-60-5	trans-1,2-Dichloroethylene	ND	2.0	0.75	ug/l	
10061-02-6	trans-1,3-Dichloropropene	ND	2.0	0.61	ug/l	
100-41-4	Ethylbenzene	ND	2.0	0.48	ug/l	
591-78-6	2-Hexanone	ND	10	1.9	ug/l	
108-10-1	4-Methyl-2-pentanone	ND	10	7.3	ug/l	
74-83-9	Methyl bromide	ND	2.0	0.47	ug/l	
74-87-3	Methyl chloride	ND	2.0	0.60	ug/l	
75-09-2	Methylene chloride	ND	5.0	0.67	ug/l	
78-93-3	Methyl ethyl ketone	ND	10	3.0	ug/l	
100-42-5	Styrene	ND	2.0	0.50	ug/l	
71-55-6	1,1,1-Trichloroethane	ND	2.0	0.37	ug/l	
79-34-5	1,1,2,2-Tetrachloroethane	ND	2.0	0.46	ug/l	
79-00-5	1,1,2-Trichloroethane	ND	2.0	0.66	ug/l	
127-18-4	Tetrachloroethylene	ND	2.0	0.74	ug/l	
108-88-3	Toluene	ND	2.0	0.54	ug/l	
79-01-6	Trichloroethylene	ND	2.0	0.63	ug/l	
75-01-4	Vinyl chloride	ND	2.0	0.32	ug/l	
1330-20-7	Xylene (total)	ND	6.0	1.1	ug/l	

Method Blank Summary

Job Number: T16445
Account: ITTXHO Shaw E & I, Inc.
Project: Longhorn Army Ammunition Plant

Sample	File ID	DF	Analyzed	By	Prep Date	Prep Batch	Analytical Batch
VF2314-MB	F0079164.D	1	03/07/07	LJ	n/a	n/a	VF2314

The QC reported here applies to the following samples: **Method:** SW846 8260B

T16445-1, T16445-2, T16445-5

CAS No.	Surrogate Recoveries		Limits
1868-53-7	Dibromofluoromethane	104%	73-139%
17060-07-0	1,2-Dichloroethane-D4	100%	66-139%
2037-26-5	Toluene-D8	106%	77-148%
460-00-4	4-Bromofluorobenzene	113%	84-150%

Method Blank Summary

Job Number: T16445
Account: ITTXHO Shaw E & I, Inc.
Project: Longhorn Army Ammunition Plant

Sample	File ID	DF	Analyzed	By	Prep Date	Prep Batch	Analytical Batch
VF2315-MB	F0079184.D	1	03/07/07	LJ	n/a	n/a	VF2315

The QC reported here applies to the following samples: **Method:** SW846 8260B

T16445-3, T16445-6, T16445-8, T16445-9, T16445-10, T16445-11, T16445-14, T16445-15, T16445-18

CAS No.	Compound	Result	RL	MDL	Units	Q
67-64-1	Acetone	ND	50	2.8	ug/l	
71-43-2	Benzene	ND	2.0	0.23	ug/l	
75-27-4	Bromodichloromethane	ND	2.0	0.33	ug/l	
75-25-2	Bromoform	ND	2.0	0.65	ug/l	
108-90-7	Chlorobenzene	ND	2.0	0.54	ug/l	
75-00-3	Chloroethane	ND	2.0	0.46	ug/l	
67-66-3	Chloroform	ND	2.0	0.66	ug/l	
75-15-0	Carbon disulfide	ND	2.0	0.62	ug/l	
56-23-5	Carbon tetrachloride	ND	2.0	0.52	ug/l	
75-34-3	1,1-Dichloroethane	ND	2.0	0.52	ug/l	
75-35-4	1,1-Dichloroethylene	ND	2.0	0.68	ug/l	
107-06-2	1,2-Dichloroethane	ND	2.0	0.53	ug/l	
78-87-5	1,2-Dichloropropane	ND	2.0	0.59	ug/l	
124-48-1	Dibromochloromethane	ND	2.0	0.68	ug/l	
156-59-2	cis-1,2-Dichloroethylene	ND	2.0	0.83	ug/l	
10061-01-5	cis-1,3-Dichloropropene	ND	2.0	0.59	ug/l	
156-60-5	trans-1,2-Dichloroethylene	ND	2.0	0.75	ug/l	
10061-02-6	trans-1,3-Dichloropropene	ND	2.0	0.61	ug/l	
100-41-4	Ethylbenzene	ND	2.0	0.48	ug/l	
591-78-6	2-Hexanone	ND	10	1.9	ug/l	
108-10-1	4-Methyl-2-pentanone	ND	10	7.3	ug/l	
74-83-9	Methyl bromide	ND	2.0	0.47	ug/l	
74-87-3	Methyl chloride	ND	2.0	0.60	ug/l	
75-09-2	Methylene chloride	ND	5.0	0.67	ug/l	
78-93-3	Methyl ethyl ketone	ND	10	3.0	ug/l	
100-42-5	Styrene	ND	2.0	0.50	ug/l	
71-55-6	1,1,1-Trichloroethane	ND	2.0	0.37	ug/l	
79-34-5	1,1,2,2-Tetrachloroethane	ND	2.0	0.46	ug/l	
79-00-5	1,1,2-Trichloroethane	ND	2.0	0.66	ug/l	
127-18-4	Tetrachloroethylene	ND	2.0	0.74	ug/l	
108-88-3	Toluene	ND	2.0	0.54	ug/l	
79-01-6	Trichloroethylene	ND	2.0	0.63	ug/l	
75-01-4	Vinyl chloride	ND	2.0	0.32	ug/l	
1330-20-7	Xylene (total)	ND	6.0	1.1	ug/l	

Method Blank Summary

Job Number: T16445
Account: ITTXHO Shaw E & I, Inc.
Project: Longhorn Army Ammunition Plant

Sample	File ID	DF	Analyzed	By	Prep Date	Prep Batch	Analytical Batch
VF2315-MB	F0079184.D	1	03/07/07	LJ	n/a	n/a	VF2315

The QC reported here applies to the following samples: **Method:** SW846 8260B

T16445-3, T16445-6, T16445-8, T16445-9, T16445-10, T16445-11, T16445-14, T16445-15, T16445-18

CAS No.	Surrogate Recoveries		Limits
1868-53-7	Dibromofluoromethane	103%	73-139%
17060-07-0	1,2-Dichloroethane-D4	98%	66-139%
2037-26-5	Toluene-D8	109%	77-148%
460-00-4	4-Bromofluorobenzene	129%	84-150%

Method Blank Summary

Job Number: T16445
Account: ITTXHO Shaw E & I, Inc.
Project: Longhorn Army Ammunition Plant

Sample	File ID	DF	Analyzed	By	Prep Date	Prep Batch	Analytical Batch
VF2318-MB	F0079225.D	1	03/08/07	LJ	n/a	n/a	VF2318

The QC reported here applies to the following samples: **Method:** SW846 8260B

T16445-3, T16445-4, T16445-6, T16445-7, T16445-8, T16445-9, T16445-10, T16445-12, T16445-13, T16445-14

CAS No.	Compound	Result	RL	MDL	Units	Q
67-64-1	Acetone	ND	50	2.8	ug/l	
71-43-2	Benzene	ND	2.0	0.23	ug/l	
75-27-4	Bromodichloromethane	ND	2.0	0.33	ug/l	
75-25-2	Bromoform	ND	2.0	0.65	ug/l	
108-90-7	Chlorobenzene	ND	2.0	0.54	ug/l	
75-00-3	Chloroethane	ND	2.0	0.46	ug/l	
67-66-3	Chloroform	ND	2.0	0.66	ug/l	
75-15-0	Carbon disulfide	ND	2.0	0.62	ug/l	
56-23-5	Carbon tetrachloride	ND	2.0	0.52	ug/l	
75-34-3	1,1-Dichloroethane	ND	2.0	0.52	ug/l	
75-35-4	1,1-Dichloroethylene	ND	2.0	0.68	ug/l	
107-06-2	1,2-Dichloroethane	ND	2.0	0.53	ug/l	
78-87-5	1,2-Dichloropropane	ND	2.0	0.59	ug/l	
124-48-1	Dibromochloromethane	ND	2.0	0.68	ug/l	
156-59-2	cis-1,2-Dichloroethylene	ND	2.0	0.83	ug/l	
10061-01-5	cis-1,3-Dichloropropene	ND	2.0	0.59	ug/l	
156-60-5	trans-1,2-Dichloroethylene	ND	2.0	0.75	ug/l	
10061-02-6	trans-1,3-Dichloropropene	ND	2.0	0.61	ug/l	
100-41-4	Ethylbenzene	ND	2.0	0.48	ug/l	
591-78-6	2-Hexanone	ND	10	1.9	ug/l	
108-10-1	4-Methyl-2-pentanone	ND	10	7.3	ug/l	
74-83-9	Methyl bromide	ND	2.0	0.47	ug/l	
74-87-3	Methyl chloride	ND	2.0	0.60	ug/l	
75-09-2	Methylene chloride	ND	5.0	0.67	ug/l	
78-93-3	Methyl ethyl ketone	ND	10	3.0	ug/l	
100-42-5	Styrene	ND	2.0	0.50	ug/l	
71-55-6	1,1,1-Trichloroethane	ND	2.0	0.37	ug/l	
79-34-5	1,1,2,2-Tetrachloroethane	ND	2.0	0.46	ug/l	
79-00-5	1,1,2-Trichloroethane	ND	2.0	0.66	ug/l	
127-18-4	Tetrachloroethylene	ND	2.0	0.74	ug/l	
108-88-3	Toluene	ND	2.0	0.54	ug/l	
79-01-6	Trichloroethylene	ND	2.0	0.63	ug/l	
75-01-4	Vinyl chloride	ND	2.0	0.32	ug/l	
1330-20-7	Xylene (total)	ND	6.0	1.1	ug/l	

Method Blank Summary

Job Number: T16445
Account: ITTXHO Shaw E & I, Inc.
Project: Longhorn Army Ammunition Plant

Sample	File ID	DF	Analyzed	By	Prep Date	Prep Batch	Analytical Batch
VF2318-MB	F0079225.D	1	03/08/07	LJ	n/a	n/a	VF2318

The QC reported here applies to the following samples: **Method:** SW846 8260B

T16445-3, T16445-4, T16445-6, T16445-7, T16445-8, T16445-9, T16445-10, T16445-12, T16445-13, T16445-14

CAS No.	Surrogate Recoveries		Limits
1868-53-7	Dibromofluoromethane	103%	73-139%
17060-07-0	1,2-Dichloroethane-D4	97%	66-139%
2037-26-5	Toluene-D8	108%	77-148%
460-00-4	4-Bromofluorobenzene	121%	84-150%

Blank Spike Summary

Job Number: T16445
Account: ITTXHO Shaw E & I, Inc.
Project: Longhorn Army Ammunition Plant

Sample	File ID	DF	Analyzed	By	Prep Date	Prep Batch	Analytical Batch
VF2314-BS	F0079163.D	1	03/07/07	LJ	n/a	n/a	VF2314

The QC reported here applies to the following samples: **Method:** SW846 8260B

T16445-1, T16445-2, T16445-5

CAS No.	Compound	Spike ug/l	BSP ug/l	BSP %	Limits
67-64-1	Acetone	125	109	87	31-158
71-43-2	Benzene	25	22.8	91	67-118
75-27-4	Bromodichloromethane	25	21.5	86	66-115
75-25-2	Bromoform	25	22.4	90	57-119
108-90-7	Chlorobenzene	25	22.3	89	72-116
75-00-3	Chloroethane	25	24.7	99	61-135
67-66-3	Chloroform	25	23.2	93	66-117
75-15-0	Carbon disulfide	25	19.0	76	39-136
56-23-5	Carbon tetrachloride	25	25.0	100	67-131
75-34-3	1,1-Dichloroethane	25	23.1	92	63-125
75-35-4	1,1-Dichloroethylene	25	22.3	89	52-143
107-06-2	1,2-Dichloroethane	25	23.6	94	61-120
78-87-5	1,2-Dichloropropane	25	22.6	90	64-118
124-48-1	Dibromochloromethane	25	21.7	87	67-117
156-59-2	cis-1,2-Dichloroethylene	25	21.9	88	65-116
10061-01-5	cis-1,3-Dichloropropene	25	21.9	88	67-118
156-60-5	trans-1,2-Dichloroethylene	25	22.2	89	66-128
10061-02-6	trans-1,3-Dichloropropene	25	22.9	92	73-126
100-41-4	Ethylbenzene	25	22.1	88	71-119
591-78-6	2-Hexanone	125	115	92	45-132
108-10-1	4-Methyl-2-pentanone	125	121	97	46-127
74-83-9	Methyl bromide	25	21.3	85	51-126
74-87-3	Methyl chloride	25	20.7	83	47-130
75-09-2	Methylene chloride	25	20.5	82	53-130
78-93-3	Methyl ethyl ketone	125	115	92	47-128
100-42-5	Styrene	25	18.5	74	69-115
71-55-6	1,1,1-Trichloroethane	25	24.1	96	67-128
79-34-5	1,1,2,2-Tetrachloroethane	25	21.7	87	57-121
79-00-5	1,1,2-Trichloroethane	25	22.9	92	62-117
127-18-4	Tetrachloroethylene	25	23.7	95	72-128
108-88-3	Toluene	25	22.4	90	70-121
79-01-6	Trichloroethylene	25	23.1	92	69-120
75-01-4	Vinyl chloride	25	23.0	92	59-145
1330-20-7	Xylene (total)	75	67.8	90	72-120

Blank Spike Summary

Job Number: T16445
Account: ITTXHO Shaw E & I, Inc.
Project: Longhorn Army Ammunition Plant

Sample	File ID	DF	Analyzed	By	Prep Date	Prep Batch	Analytical Batch
VF2314-BS	F0079163.D	1	03/07/07	LJ	n/a	n/a	VF2314

The QC reported here applies to the following samples: **Method:** SW846 8260B

T16445-1, T16445-2, T16445-5

CAS No.	Surrogate Recoveries	BSP	Limits
1868-53-7	Dibromofluoromethane	105%	73-139%
17060-07-0	1,2-Dichloroethane-D4	102%	66-139%
2037-26-5	Toluene-D8	103%	77-148%
460-00-4	4-Bromofluorobenzene	98%	84-150%

Blank Spike Summary

Job Number: T16445
Account: ITTXHO Shaw E & I, Inc.
Project: Longhorn Army Ammunition Plant

Sample	File ID	DF	Analyzed	By	Prep Date	Prep Batch	Analytical Batch
VF2315-BS	F0079183.D	1	03/07/07	LJ	n/a	n/a	VF2315

The QC reported here applies to the following samples: **Method:** SW846 8260B

T16445-3, T16445-6, T16445-8, T16445-9, T16445-10, T16445-11, T16445-14, T16445-15, T16445-18

CAS No.	Compound	Spike ug/l	BSP ug/l	BSP %	Limits
67-64-1	Acetone	125	103	82	31-158
71-43-2	Benzene	25	25.1	100	67-118
75-27-4	Bromodichloromethane	25	23.8	95	66-115
75-25-2	Bromoform	25	22.2	89	57-119
108-90-7	Chlorobenzene	25	24.3	97	72-116
75-00-3	Chloroethane	25	26.6	106	61-135
67-66-3	Chloroform	25	25.7	103	66-117
75-15-0	Carbon disulfide	25	21.7	87	39-136
56-23-5	Carbon tetrachloride	25	27.6	110	67-131
75-34-3	1,1-Dichloroethane	25	26.2	105	63-125
75-35-4	1,1-Dichloroethylene	25	25.4	102	52-143
107-06-2	1,2-Dichloroethane	25	24.1	96	61-120
78-87-5	1,2-Dichloropropane	25	25.2	101	64-118
124-48-1	Dibromochloromethane	25	22.4	90	67-117
156-59-2	cis-1,2-Dichloroethylene	25	24.3	97	65-116
10061-01-5	cis-1,3-Dichloropropene	25	25.0	100	67-118
156-60-5	trans-1,2-Dichloroethylene	25	25.2	101	66-128
10061-02-6	trans-1,3-Dichloropropene	25	24.7	99	73-126
100-41-4	Ethylbenzene	25	23.9	96	71-119
591-78-6	2-Hexanone	125	101	81	45-132
108-10-1	4-Methyl-2-pentanone	125	111	89	46-127
74-83-9	Methyl bromide	25	23.0	92	51-126
74-87-3	Methyl chloride	25	23.0	92	47-130
75-09-2	Methylene chloride	25	23.5	94	53-130
78-93-3	Methyl ethyl ketone	125	107	86	47-128
100-42-5	Styrene	25	20.0	80	69-115
71-55-6	1,1,1-Trichloroethane	25	26.2	105	67-128
79-34-5	1,1,2,2-Tetrachloroethane	25	21.4	86	57-121
79-00-5	1,1,2-Trichloroethane	25	22.9	92	62-117
127-18-4	Tetrachloroethylene	25	26.4	106	72-128
108-88-3	Toluene	25	24.3	97	70-121
79-01-6	Trichloroethylene	25	26.1	104	69-120
75-01-4	Vinyl chloride	25	25.2	101	59-145
1330-20-7	Xylene (total)	75	74.2	99	72-120

Blank Spike Summary

Job Number: T16445
Account: ITTXHO Shaw E & I, Inc.
Project: Longhorn Army Ammunition Plant

Sample	File ID	DF	Analyzed	By	Prep Date	Prep Batch	Analytical Batch
VF2315-BS	F0079183.D	1	03/07/07	LJ	n/a	n/a	VF2315

The QC reported here applies to the following samples: **Method:** SW846 8260B

T16445-3, T16445-6, T16445-8, T16445-9, T16445-10, T16445-11, T16445-14, T16445-15, T16445-18

CAS No.	Surrogate Recoveries	BSP	Limits
1868-53-7	Dibromofluoromethane	104%	73-139%
17060-07-0	1,2-Dichloroethane-D4	101%	66-139%
2037-26-5	Toluene-D8	102%	77-148%
460-00-4	4-Bromofluorobenzene	99%	84-150%

Blank Spike Summary

Job Number: T16445
Account: ITTXHO Shaw E & I, Inc.
Project: Longhorn Army Ammunition Plant

Sample	File ID	DF	Analyzed	By	Prep Date	Prep Batch	Analytical Batch
VF2318-BS	F0079224.D	1	03/08/07	LJ	n/a	n/a	VF2318

The QC reported here applies to the following samples: **Method:** SW846 8260B

T16445-3, T16445-4, T16445-6, T16445-7, T16445-8, T16445-9, T16445-10, T16445-12, T16445-13, T16445-14

CAS No.	Compound	Spike ug/l	BSP ug/l	BSP %	Limits
67-64-1	Acetone	125	87.0	70	31-158
71-43-2	Benzene	25	24.3	97	67-118
75-27-4	Bromodichloromethane	25	22.4	90	66-115
75-25-2	Bromoform	25	20.6	82	57-119
108-90-7	Chlorobenzene	25	24.0	96	72-116
75-00-3	Chloroethane	25	24.1	96	61-135
67-66-3	Chloroform	25	24.6	98	66-117
75-15-0	Carbon disulfide	25	20.1	80	39-136
56-23-5	Carbon tetrachloride	25	27.0	108	67-131
75-34-3	1,1-Dichloroethane	25	24.3	97	63-125
75-35-4	1,1-Dichloroethylene	25	23.0	92	52-143
107-06-2	1,2-Dichloroethane	25	22.7	91	61-120
78-87-5	1,2-Dichloropropane	25	24.3	97	64-118
124-48-1	Dibromochloromethane	25	21.1	84	67-117
156-59-2	cis-1,2-Dichloroethylene	25	23.4	94	65-116
10061-01-5	cis-1,3-Dichloropropene	25	23.6	94	67-118
156-60-5	trans-1,2-Dichloroethylene	25	23.3	93	66-128
10061-02-6	trans-1,3-Dichloropropene	25	22.2	89	73-126
100-41-4	Ethylbenzene	25	23.9	96	71-119
591-78-6	2-Hexanone	125	87.1	70	45-132
108-10-1	4-Methyl-2-pentanone	125	95.6	76	46-127
74-83-9	Methyl bromide	25	21.3	85	51-126
74-87-3	Methyl chloride	25	22.5	90	47-130
75-09-2	Methylene chloride	25	21.8	87	53-130
78-93-3	Methyl ethyl ketone	125	87.5	70	47-128
100-42-5	Styrene	25	19.3	77	69-115
71-55-6	1,1,1-Trichloroethane	25	26.5	106	67-128
79-34-5	1,1,2,2-Tetrachloroethane	25	19.4	78	57-121
79-00-5	1,1,2-Trichloroethane	25	20.9	84	62-117
127-18-4	Tetrachloroethylene	25	26.1	104	72-128
108-88-3	Toluene	25	23.9	96	70-121
79-01-6	Trichloroethylene	25	25.5	102	69-120
75-01-4	Vinyl chloride	25	22.5	90	59-145
1330-20-7	Xylene (total)	75	72.3	96	72-120

Blank Spike Summary

Job Number: T16445
Account: ITTXHO Shaw E & I, Inc.
Project: Longhorn Army Ammunition Plant

Sample	File ID	DF	Analyzed	By	Prep Date	Prep Batch	Analytical Batch
VF2318-BS	F0079224.D	1	03/08/07	LJ	n/a	n/a	VF2318

The QC reported here applies to the following samples: **Method:** SW846 8260B

T16445-3, T16445-4, T16445-6, T16445-7, T16445-8, T16445-9, T16445-10, T16445-12, T16445-13, T16445-14

CAS No.	Surrogate Recoveries	BSP	Limits
1868-53-7	Dibromofluoromethane	106%	73-139%
17060-07-0	1,2-Dichloroethane-D4	97%	66-139%
2037-26-5	Toluene-D8	103%	77-148%
460-00-4	4-Bromofluorobenzene	101%	84-150%

Matrix Spike/Matrix Spike Duplicate Summary

Job Number: T16445
Account: ITTXHO Shaw E & I, Inc.
Project: Longhorn Army Ammunition Plant

Sample	File ID	DF	Analyzed	By	Prep Date	Prep Batch	Analytical Batch
T16445-5MS	F0079170.D	1	03/07/07	LJ	n/a	n/a	VF2314
T16445-5MSD	F0079171.D	1	03/07/07	LJ	n/a	n/a	VF2314
T16445-5	F0079169.D	1	03/07/07	LJ	n/a	n/a	VF2314
T16445-5	F0079180.D	20	03/07/07	LJ	n/a	n/a	VF2314

The QC reported here applies to the following samples: **Method:** SW846 8260B

T16445-1, T16445-2, T16445-5

CAS No.	Compound	T16445-5 ug/l	Q	Spike ug/l	MS ug/l	MS %	MSD ug/l	MSD %	RPD	Limits Rec/RPD
67-64-1	Acetone	50 U		125	121	97	121	97	0	39-130/26
71-43-2	Benzene	2.0 U		25	23.6	94	22.9	92	3	65-122/15
75-27-4	Bromodichloromethane	2.0 U		25	22.6	90	21.7	87	4	64-119/22
75-25-2	Bromoform	2.0 U		25	23.7	95	22.9	92	3	50-123/28
108-90-7	Chlorobenzene	2.0 U		25	22.8	91	22.4	90	2	72-118/20
75-00-3	Chloroethane	2.0 U		25	26.5	106	25.7	103	3	60-136/25
67-66-3	Chloroform	2.0 U		25	24.0	96	23.6	94	2	65-120/20
75-15-0	Carbon disulfide	2.0 U		25	19.4	78	19.7	79	2	37-140/24
56-23-5	Carbon tetrachloride	2.0 U		25	25.3	101	25.0	100	1	64-135/23
75-34-3	1,1-Dichloroethane	1.3	J	25	25.7	98	25.0	95	3	65-126/21
75-35-4	1,1-Dichloroethylene	12.9		25	35.8	92	36.0	92	1	55-140/25
107-06-2	1,2-Dichloroethane	13.5		25	39.1	102	38.0	98	3	57-125/25
78-87-5	1,2-Dichloropropane	2.0 U		25	23.8	95	23.2	93	3	63-121/22
124-48-1	Dibromochloromethane	2.0 U		25	21.9	88	22.0	88	0	60-123/23
156-59-2	cis-1,2-Dichloroethylene	48.2		25	72.1	96	72.9	99	1	62-120/24
10061-01-5	cis-1,3-Dichloropropene	2.0 U		25	22.2	89	22.2	89	0	61-119/23
156-60-5	trans-1,2-Dichloroethylene	2.0 U		25	24.0	96	23.5	94	2	64-130/22
10061-02-6	trans-1,3-Dichloropropene	2.0 U		25	22.6	90	22.5	90	0	65-129/23
100-41-4	Ethylbenzene	2.0 U		25	22.4	90	22.2	89	1	70-123/18
591-78-6	2-Hexanone	10 U		125	126	101	124	99	2	41-137/27
108-10-1	4-Methyl-2-pentanone	10 U		125	133	106	132	106	1	41-133/22
74-83-9	Methyl bromide	2.0 U		25	23.2	93	22.1	88	5	47-129/27
74-87-3	Methyl chloride	2.0 U		25	23.7	95	22.5	90	5	45-133/24
75-09-2	Methylene chloride	5.0 U		25	22.3	89	21.5	86	4	49-128/21
78-93-3	Methyl ethyl ketone	10 U		125	126	101	125	100	1	43-125/29
100-42-5	Styrene	2.0 U		25	18.7	75	18.4	74	2	65-120/21
71-55-6	1,1,1-Trichloroethane	2.0 U		25	24.8	99	24.5	98	1	68-131/21
79-34-5	1,1,2,2-Tetrachloroethane	2.0 U		25	22.1	88	22.7	91	3	50-128/22
79-00-5	1,1,2-Trichloroethane	2.0 U		25	22.9	92	23.0	92	0	58-120/22
127-18-4	Tetrachloroethylene	5.1		25	28.7	94	29.1	96	1	69-132/21
108-88-3	Toluene	2.0 U		25	22.7	91	22.3	89	2	70-123/18
79-01-6	Trichloroethylene	1460 [b]		25	1680	200* [a]	1680	200* [a]	0	70-120/19
75-01-4	Vinyl chloride	2.5		25	28.3	103	27.3	99	4	51-147/24
1330-20-7	Xylene (total)	6.0 U		75	68.6	91	67.6	90	1	71-122/16

Matrix Spike/Matrix Spike Duplicate Summary

Job Number: T16445
Account: ITTXHO Shaw E & I, Inc.
Project: Longhorn Army Ammunition Plant

Sample	File ID	DF	Analyzed	By	Prep Date	Prep Batch	Analytical Batch
T16445-5MS	F0079170.D	1	03/07/07	LJ	n/a	n/a	VF2314
T16445-5MSD	F0079171.D	1	03/07/07	LJ	n/a	n/a	VF2314
T16445-5	F0079169.D	1	03/07/07	LJ	n/a	n/a	VF2314
T16445-5	F0079180.D	20	03/07/07	LJ	n/a	n/a	VF2314

The QC reported here applies to the following samples: **Method:** SW846 8260B

T16445-1, T16445-2, T16445-5

CAS No.	Surrogate Recoveries	MS	MSD	T16445-5	T16445-5	Limits
1868-53-7	Dibromofluoromethane	110%	112%	107%	105%	73-139%
17060-07-0	1,2-Dichloroethane-D4	109%	108%	105%	104%	66-139%
2037-26-5	Toluene-D8	107%	107%	105%	108%	77-148%
460-00-4	4-Bromofluorobenzene	102%	103%	114%	129%	84-150%

(a) Outside control limits due to high level in sample relative to spike amount.
(b) Result is from Run #2.

Matrix Spike/Matrix Spike Duplicate Summary

Job Number: T16445
Account: ITTXHO Shaw E & I, Inc.
Project: Longhorn Army Ammunition Plant

Sample	File ID	DF	Analyzed	By	Prep Date	Prep Batch	Analytical Batch
T16445-3MS	F0079191.D	1	03/07/07	LJ	n/a	n/a	VF2315
T16445-3MSD	F0079192.D	1	03/07/07	LJ	n/a	n/a	VF2315
T16445-3 [a]	F0079190.D	1	03/07/07	LJ	n/a	n/a	VF2315

The QC reported here applies to the following samples: **Method:** SW846 8260B

T16445-3, T16445-6, T16445-8, T16445-9, T16445-10, T16445-11, T16445-14, T16445-15, T16445-18

CAS No.	Compound	T16445-3 ug/l	Q	Spike ug/l	MS ug/l	MS %	MSD ug/l	MSD %	RPD	Limits Rec/RPD
67-64-1	Acetone	50 U		125	103	82	98.2	79	5	39-130/26
71-43-2	Benzene	2.0 U		25	23.6	94	24.0	96	2	65-122/15
75-27-4	Bromodichloromethane	2.0 U		25	22.5	90	22.3	89	1	64-119/22
75-25-2	Bromoform	2.0 U		25	20.5	82	20.7	83	1	50-123/28
108-90-7	Chlorobenzene	2.0 U		25	22.8	91	23.3	93	2	72-118/20
75-00-3	Chloroethane	2.0 U		25	24.6	98	23.8	95	3	60-136/25
67-66-3	Chloroform	2.0 U		25	24.9	100	25.4	102	2	65-120/20
75-15-0	Carbon disulfide	2.0 U		25	20.2	81	19.9	80	1	37-140/24
56-23-5	Carbon tetrachloride	2.0 U		25	25.6	102	25.8	103	1	64-135/23
75-34-3	1,1-Dichloroethane	2.0		25	27.3	101	26.7	99	2	65-126/21
75-35-4	1,1-Dichloroethylene	10.9		25	34.9	96	33.5	90	4	55-140/25
107-06-2	1,2-Dichloroethane	2.0		25	24.5	90	24.1	88	2	57-125/25
78-87-5	1,2-Dichloropropane	2.0 U		25	23.2	93	24.2	97	4	63-121/22
124-48-1	Dibromochloromethane	2.0 U		25	21.4	86	22.0	88	3	60-123/23
156-59-2	cis-1,2-Dichloroethylene	699	E	25	685	-56* [b]	690	-36* [b]	1	62-120/24
10061-01-5	cis-1,3-Dichloropropene	2.0 U		25	23.5	94	23.8	95	1	61-119/23
156-60-5	trans-1,2-Dichloroethylene	2.1		25	26.1	96	26.0	96	0	64-130/22
10061-02-6	trans-1,3-Dichloropropene	2.0 U		25	24.4	98	24.1	96	1	65-129/23
100-41-4	Ethylbenzene	2.0 U		25	22.8	91	23.5	94	3	70-123/18
591-78-6	2-Hexanone	10 U		125	105	84	101	81	4	41-137/27
108-10-1	4-Methyl-2-pentanone	10 U		125	114	91	110	88	4	41-133/22
74-83-9	Methyl bromide	2.0 U		25	21.6	86	20.8	83	4	47-129/27
74-87-3	Methyl chloride	2.0 U		25	23.2	93	22.1	88	5	45-133/24
75-09-2	Methylene chloride	5.0 U		25	22.8	91	22.5	90	1	49-128/21
78-93-3	Methyl ethyl ketone	10 U		125	108	86	105	84	3	43-125/29
100-42-5	Styrene	2.0 U		25	18.9	76	19.0	76	1	65-120/21
71-55-6	1,1,1-Trichloroethane	2.0 U		25	25.2	101	24.8	99	2	68-131/21
79-34-5	1,1,2,2-Tetrachloroethane	2.0 U		25	20.8	83	21.4	86	3	50-128/22
79-00-5	1,1,2-Trichloroethane	1.7	J	25	23.7	88	24.0	89	1	58-120/22
127-18-4	Tetrachloroethylene	83.1		25	107	96	106	92	1	69-132/21
108-88-3	Toluene	2.0 U		25	22.8	91	23.4	94	3	70-123/18
79-01-6	Trichloroethylene	6520	E	25	6200	-1280* [b]	6140	-1520* [b]	1	70-120/19
75-01-4	Vinyl chloride	3.8		25	28.3	98	27.1	93	4	51-147/24
1330-20-7	Xylene (total)	6.0 U		75	69.8	93	70.7	94	1	71-122/16

Matrix Spike/Matrix Spike Duplicate Summary

Job Number: T16445
Account: ITTXHO Shaw E & I, Inc.
Project: Longhorn Army Ammunition Plant

Sample	File ID	DF	Analyzed	By	Prep Date	Prep Batch	Analytical Batch
T16445-3MS	F0079191.D	1	03/07/07	LJ	n/a	n/a	VF2315
T16445-3MSD	F0079192.D	1	03/07/07	LJ	n/a	n/a	VF2315
T16445-3 [a]	F0079190.D	1	03/07/07	LJ	n/a	n/a	VF2315

The QC reported here applies to the following samples: **Method:** SW846 8260B

T16445-3, T16445-6, T16445-8, T16445-9, T16445-10, T16445-11, T16445-14, T16445-15, T16445-18

CAS No.	Surrogate Recoveries	MS	MSD	T16445-3	Limits
1868-53-7	Dibromofluoromethane	106%	107%	106%	73-139%
17060-07-0	1,2-Dichloroethane-D4	106%	107%	106%	66-139%
2037-26-5	Toluene-D8	101%	104%	102%	77-148%
460-00-4	4-Bromofluorobenzene	99%	103%	123%	84-150%

(a) For QC only.
(b) Outside control limits due to high level in sample relative to spike amount.

Matrix Spike/Matrix Spike Duplicate Summary

Job Number: T16445
Account: ITTXHO Shaw E & I, Inc.
Project: Longhorn Army Ammunition Plant

Sample	File ID	DF	Analyzed	By	Prep Date	Prep Batch	Analytical Batch
T16445-4MS	F0079227.D	1	03/08/07	LJ	n/a	n/a	VF2318
T16445-4MSD	F0079228.D	1	03/08/07	LJ	n/a	n/a	VF2318
T16445-4	F0079226.D	1	03/08/07	LJ	n/a	n/a	VF2318

The QC reported here applies to the following samples: **Method:** SW846 8260B

T16445-3, T16445-4, T16445-6, T16445-7, T16445-8, T16445-9, T16445-10, T16445-12, T16445-13, T16445-14

CAS No.	Compound	T16445-4 ug/l	Q	Spike ug/l	MS ug/l	MS %	MSD ug/l	MSD %	RPD	Limits Rec/RPD
67-64-1	Acetone	50	U	125	98.5	79	107	86	8	39-130/26
71-43-2	Benzene	2.0	U	25	23.2	93	23.1	92	0	65-122/15
75-27-4	Bromodichloromethane	2.0	U	25	22.0	88	22.2	89	1	64-119/22
75-25-2	Bromoform	2.0	U	25	21.7	87	22.1	88	2	50-123/28
108-90-7	Chlorobenzene	2.0	U	25	23.0	92	22.8	91	1	72-118/20
75-00-3	Chloroethane	2.0	U	25	26.1	104	24.8	99	5	60-136/25
67-66-3	Chloroform	2.0	U	25	24.0	96	23.5	94	2	65-120/20
75-15-0	Carbon disulfide	2.0	U	25	19.5	78	18.9	76	3	37-140/24
56-23-5	Carbon tetrachloride	2.0	U	25	25.6	102	25.4	102	1	64-135/23
75-34-3	1,1-Dichloroethane	2.0	U	25	24.3	97	23.5	94	3	65-126/21
75-35-4	1,1-Dichloroethylene	2.0	U	25	23.0	92	22.0	88	4	55-140/25
107-06-2	1,2-Dichloroethane	2.0	U	25	23.0	92	22.6	90	2	57-125/25
78-87-5	1,2-Dichloropropane	2.0	U	25	23.4	94	23.3	93	0	63-121/22
124-48-1	Dibromochloromethane	2.0	U	25	21.2	85	22.2	89	5	60-123/23
156-59-2	cis-1,2-Dichloroethylene	2.0	U	25	22.3	89	22.2	89	0	62-120/24
10061-01-5	cis-1,3-Dichloropropene	2.0	U	25	23.2	93	23.0	92	1	61-119/23
156-60-5	trans-1,2-Dichloroethylene	2.0	U	25	23.1	92	22.1	88	4	64-130/22
10061-02-6	trans-1,3-Dichloropropene	2.0	U	25	22.6	90	23.5	94	4	65-129/23
100-41-4	Ethylbenzene	2.0	U	25	22.8	91	22.7	91	0	70-123/18
591-78-6	2-Hexanone	10	U	125	101	81	112	90	10	41-137/27
108-10-1	4-Methyl-2-pentanone	10	U	125	112	90	118	94	5	41-133/22
74-83-9	Methyl bromide	2.0	U	25	23.1	92	22.6	90	2	47-129/27
74-87-3	Methyl chloride	2.0	U	25	24.9	100	23.5	94	6	45-133/24
75-09-2	Methylene chloride	5.0	U	25	21.8	87	21.4	86	2	49-128/21
78-93-3	Methyl ethyl ketone	10	U	125	104	83	112	90	7	43-125/29
100-42-5	Styrene	2.0	U	25	19.1	76	19.1	76	0	65-120/21
71-55-6	1,1,1-Trichloroethane	2.0	U	25	25.0	100	24.2	97	3	68-131/21
79-34-5	1,1,2,2-Tetrachloroethane	2.0	U	25	20.8	83	21.6	86	4	50-128/22
79-00-5	1,1,2-Trichloroethane	2.0	U	25	22.0	88	22.4	90	2	58-120/22
127-18-4	Tetrachloroethylene	2.0	U	25	25.0	100	24.9	100	0	69-132/21
108-88-3	Toluene	2.0	U	25	23.0	92	23.1	92	0	70-123/18
79-01-6	Trichloroethylene	2.0		25	26.3	97	25.9	96	2	70-120/19
75-01-4	Vinyl chloride	2.0	U	25	25.9	104	23.5	94	10	51-147/24
1330-20-7	Xylene (total)	6.0	U	75	70.3	94	69.8	93	1	71-122/16

Matrix Spike/Matrix Spike Duplicate Summary

Job Number: T16445
Account: ITTXHO Shaw E & I, Inc.
Project: Longhorn Army Ammunition Plant

Sample	File ID	DF	Analyzed	By	Prep Date	Prep Batch	Analytical Batch
T16445-4MS	F0079227.D	1	03/08/07	LJ	n/a	n/a	VF2318
T16445-4MSD	F0079228.D	1	03/08/07	LJ	n/a	n/a	VF2318
T16445-4	F0079226.D	1	03/08/07	LJ	n/a	n/a	VF2318

The QC reported here applies to the following samples: **Method:** SW846 8260B

T16445-3, T16445-4, T16445-6, T16445-7, T16445-8, T16445-9, T16445-10, T16445-12, T16445-13, T16445-14

CAS No.	Surrogate Recoveries	MS	MSD	T16445-4	Limits
1868-53-7	Dibromofluoromethane	106%	105%	102%	73-139%
17060-07-0	1,2-Dichloroethane-D4	104%	102%	98%	66-139%
2037-26-5	Toluene-D8	103%	105%	106%	77-148%
460-00-4	4-Bromofluorobenzene	99%	99%	119%	84-150%

Instrument Performance Check (BFB)

Job Number: T16445
Account: ITTXHO Shaw E & I, Inc.
Project: Longhorn Army Ammunition Plant

Sample: VF2305-BFB
Lab File ID: F0078963.D
Instrument ID: GCMSF
Injection Date: 02/28/07
Injection Time: 14:36

m/e	Ion Abundance Criteria	Raw Abundance	% Relative Abundance		Pass/Fail
50	15.0 - 40.0% of mass 95	7281	16.0		Pass
75	30.0 - 60.0% of mass 95	18364	40.3		Pass
95	Base peak, 100% relative abundance	45541	100.0		Pass
96	5.0 - 9.0% of mass 95	2793	6.1		Pass
173	Less than 2.0% of mass 174	107	0.23	(0.27) [a]	Pass
174	50.0 - 100.0% of mass 95	39123	85.9		Pass
175	5.0 - 9.0% of mass 174	3023	6.6	(7.7) [a]	Pass
176	95.0 - 101.0% of mass 174	37355	82.0	(95.5) [a]	Pass
177	5.0 - 9.0% of mass 176	2802	6.2	(7.5) [b]	Pass

(a) Value is % of mass 174
(b) Value is % of mass 176

This check applies to the following Samples, MS, MSD, Blanks, and Standards:

Lab Sample ID	Lab File ID	Date Analyzed	Time Analyzed	Hours Lapsed	Client Sample ID
VF2305-IC2305	F0078964.D	02/28/07	15:10	00:34	Initial cal 2
VF2305-IC2305	F0078965.D	02/28/07	15:41	01:05	Initial cal 5
VF2305-IC2305	F0078966.D	02/28/07	16:12	01:36	Initial cal 20
VF2305-ICC2305	F0078967.D	02/28/07	16:44	02:08	Initial cal 40
VF2305-IC2305	F0078968.D	02/28/07	17:16	02:40	Initial cal 70
VF2305-IC2305	F0078969.D	02/28/07	17:46	03:10	Initial cal 100
VF2305-IC2305	F0078970.D	02/28/07	18:18	03:42	Initial cal 200
VF2305-BS	F0078972.D	02/28/07	19:21	04:45	Blank Spike
VF2305-MB	F0078974.D	02/28/07	20:24	05:48	Method Blank
ZZZZZZ	F0078975.D	02/28/07	20:55	06:19	(unrelated sample)
ZZZZZZ	F0078976.D	02/28/07	21:26	06:50	(unrelated sample)
ZZZZZZ	F0078977.D	02/28/07	21:58	07:22	(unrelated sample)
T16395-2	F0078978.D	02/28/07	22:30	07:54	(used for QC only; not part of job T16445)
T16395-2MS	F0078979.D	02/28/07	23:00	08:24	Matrix Spike
T16395-2MSD	F0078980.D	02/28/07	23:32	08:56	Matrix Spike Duplicate
ZZZZZZ	F0078981.D	03/01/07	00:03	09:27	(unrelated sample)
ZZZZZZ	F0078982.D	03/01/07	00:35	09:59	(unrelated sample)
ZZZZZZ	F0078983.D	03/01/07	01:06	10:30	(unrelated sample)
ZZZZZZ	F0078984.D	03/01/07	01:38	11:02	(unrelated sample)
ZZZZZZ	F0078989.D	03/01/07	04:15	13:39	(unrelated sample)
ZZZZZZ	F0078990.D	03/01/07	04:47	14:11	(unrelated sample)
ZZZZZZ	F0078991.D	03/01/07	05:19	14:43	(unrelated sample)
ZZZZZZ	F0078992.D	03/01/07	05:50	15:14	(unrelated sample)

Instrument Performance Check (BFB)

Job Number: T16445
Account: ITTXHO Shaw E & I, Inc.
Project: Longhorn Army Ammunition Plant

Sample: VF2314-BFB
Lab File ID: F0079161.D
Instrument ID: GCMSF
Injection Date: 03/07/07
Injection Time: 02:16

m/e	Ion Abundance Criteria	Raw Abundance	% Relative Abundance		Pass/Fail
50	15.0 - 40.0% of mass 95	7377	17.5		Pass
75	30.0 - 60.0% of mass 95	17646	41.8		Pass
95	Base peak, 100% relative abundance	42171	100.0		Pass
96	5.0 - 9.0% of mass 95	2522	6.0		Pass
173	Less than 2.0% of mass 174	89	0.21	(0.25) [a]	Pass
174	50.0 - 100.0% of mass 95	36285	86.0		Pass
175	5.0 - 9.0% of mass 174	2662	6.3	(7.3) [a]	Pass
176	95.0 - 101.0% of mass 174	34632	82.1	(95.4) [a]	Pass
177	5.0 - 9.0% of mass 176	2164	5.1	(6.2) [b]	Pass

(a) Value is % of mass 174
(b) Value is % of mass 176

This check applies to the following Samples, MS, MSD, Blanks, and Standards:

Lab Sample ID	Lab File ID	Date Analyzed	Time Analyzed	Hours Lapsed	Client Sample ID
VF2314-CC2305	F0079162.D	03/07/07	02:47	00:31	Continuing cal 40
VF2314-BS	F0079163.D	03/07/07	03:18	01:02	Blank Spike
VF2314-MB	F0079164.D	03/07/07	03:50	01:34	Method Blank
ZZZZZZ	F0079165.D	03/07/07	04:21	02:05	(unrelated sample)
ZZZZZZ	F0079166.D	03/07/07	04:53	02:37	(unrelated sample)
ZZZZZZ	F0079167.D	03/07/07	05:24	03:08	(unrelated sample)
T16445-5	F0079169.D	03/07/07	06:26	04:10	50WW05-FEB2007
T16445-5MS	F0079170.D	03/07/07	06:58	04:42	Matrix Spike
T16445-5MSD	F0079171.D	03/07/07	07:29	05:13	Matrix Spike Duplicate
T16445-2	F0079173.D	03/07/07	08:32	06:16	47WW30-FEB2007
ZZZZZZ	F0079174.D	03/07/07	09:03	06:47	(unrelated sample)
ZZZZZZ	F0079175.D	03/07/07	09:35	07:19	(unrelated sample)
ZZZZZZ	F0079176.D	03/07/07	10:06	07:50	(unrelated sample)
ZZZZZZ	F0079177.D	03/07/07	10:37	08:21	(unrelated sample)
T16445-1	F0079178.D	03/07/07	11:10	08:54	29WW38-FEB2007
T16445-2	F0079179.D	03/07/07	11:41	09:25	47WW30-FEB2007
T16445-5	F0079180.D	03/07/07	12:12	09:56	50WW05-FEB2007

Instrument Performance Check (BFB)

Job Number: T16445
Account: ITTXHO Shaw E & I, Inc.
Project: Longhorn Army Ammunition Plant

Sample: VF2315-BFB
Lab File ID: F0079181.D
Instrument ID: GCMSF
Injection Date: 03/07/07
Injection Time: 12:44

m/e	Ion Abundance Criteria	Raw Abundance	% Relative Abundance		Pass/Fail
50	15.0 - 40.0% of mass 95	7668	19.2		Pass
75	30.0 - 60.0% of mass 95	16756	42.0		Pass
95	Base peak, 100% relative abundance	39853	100.0		Pass
96	5.0 - 9.0% of mass 95	2768	6.9		Pass
173	Less than 2.0% of mass 174	96	0.24	(0.28) [a]	Pass
174	50.0 - 100.0% of mass 95	34109	85.6		Pass
175	5.0 - 9.0% of mass 174	2473	6.2	(7.3) [a]	Pass
176	95.0 - 101.0% of mass 174	33421	83.9	(98.0) [a]	Pass
177	5.0 - 9.0% of mass 176	2339	5.9	(7.0) [b]	Pass

(a) Value is % of mass 174
(b) Value is % of mass 176

This check applies to the following Samples, MS, MSD, Blanks, and Standards:

Lab Sample ID	Lab File ID	Date Analyzed	Time Analyzed	Hours Lapsed	Client Sample ID
VF2315-CC2305	F0079182.D	03/07/07	13:19	00:35	Continuing cal 40
VF2315-BS	F0079183.D	03/07/07	13:54	01:10	Blank Spike
VF2315-MB	F0079184.D	03/07/07	14:26	01:42	Method Blank
T16445-15	F0079185.D	03/07/07	14:58	02:14	TRIP BLANK
ZZZZZZ	F0079186.D	03/07/07	15:28	02:44	(unrelated sample)
ZZZZZZ	F0079187.D	03/07/07	15:59	03:15	(unrelated sample)
ZZZZZZ	F0079188.D	03/07/07	16:30	03:46	(unrelated sample)
ZZZZZZ	F0079189.D	03/07/07	17:01	04:17	(unrelated sample)
T16445-3	F0079190.D	03/07/07	17:32	04:48	LHSMW43-FEB2007
T16445-3MS	F0079191.D	03/07/07	18:04	05:20	Matrix Spike
T16445-3MSD	F0079192.D	03/07/07	18:35	05:51	Matrix Spike Duplicate
T16445-6	F0079194.D	03/07/07	19:38	06:54	50WW02-FEB2007
T16445-8	F0079196.D	03/07/07	20:41	07:57	17WW02-FEB2007
T16445-9	F0079197.D	03/07/07	21:12	08:28	17WW02-FEB2007 FD
T16445-10	F0079198.D	03/07/07	21:44	09:00	29WW35-FEB2007
T16445-11	F0079199.D	03/07/07	22:15	09:31	29WW35-FEB2007 FD
T16445-14	F0079202.D	03/07/07	23:49	11:05	7WW06-FEB2007
T16445-18	F0079203.D	03/08/07	00:20	11:36	17WW130-FEB2007

Instrument Performance Check (BFB)

Job Number: T16445
Account: ITTXHO Shaw E & I, Inc.
Project: Longhorn Army Ammunition Plant

Sample: VF2318-BFB
Lab File ID: F0079222.D
Instrument ID: GCMSF
Injection Date: 03/08/07
Injection Time: 10:25

m/e	Ion Abundance Criteria	Raw Abundance	% Relative Abundance		Pass/Fail
50	15.0 - 40.0% of mass 95	6198	16.4		Pass
75	30.0 - 60.0% of mass 95	15579	41.3		Pass
95	Base peak, 100% relative abundance	37709	100.0		Pass
96	5.0 - 9.0% of mass 95	2320	6.2		Pass
173	Less than 2.0% of mass 174	83	0.22	(0.26) [a]	Pass
174	50.0 - 100.0% of mass 95	32211	85.4		Pass
175	5.0 - 9.0% of mass 174	2369	6.3	(7.4) [a]	Pass
176	95.0 - 101.0% of mass 174	31824	84.4	(98.8) [a]	Pass
177	5.0 - 9.0% of mass 176	2216	5.9	(7.0) [b]	Pass

(a) Value is % of mass 174
(b) Value is % of mass 176

This check applies to the following Samples, MS, MSD, Blanks, and Standards:

Lab Sample ID	Lab File ID	Date Analyzed	Time Analyzed	Hours Lapsed	Client Sample ID
VF2318-CC2305	F0079223.D	03/08/07	10:59	00:34	Continuing cal 40
VF2318-BS	F0079224.D	03/08/07	11:33	01:08	Blank Spike
VF2318-MB	F0079225.D	03/08/07	12:05	01:40	Method Blank
T16445-4	F0079226.D	03/08/07	12:37	02:12	50WW06-FEB2007
T16445-4MS	F0079227.D	03/08/07	13:09	02:44	Matrix Spike
T16445-4MSD	F0079228.D	03/08/07	14:05	03:40	Matrix Spike Duplicate
T16445-7	F0079229.D	03/08/07	14:36	04:11	17WW16-FEB2007
T16445-12	F0079230.D	03/08/07	15:08	04:43	29WW06-FEB2007
T16445-13	F0079231.D	03/08/07	15:39	05:14	17WW05-FEB2007
T16445-3	F0079232.D	03/08/07	16:11	05:46	LHSMW43-FEB2007
T16445-3	F0079233.D	03/08/07	16:42	06:17	LHSMW43-FEB2007
T16445-6	F0079234.D	03/08/07	17:14	06:49	50WW02-FEB2007
T16445-8	F0079235.D	03/08/07	17:45	07:20	17WW02-FEB2007
T16445-9	F0079236.D	03/08/07	18:17	07:52	17WW02-FEB2007 FD
T16445-10	F0079237.D	03/08/07	18:49	08:24	29WW35-FEB2007
T16445-14	F0079238.D	03/08/07	19:21	08:56	7WW06-FEB2007
ZZZZZZ	F0079239.D	03/08/07	19:53	09:28	(unrelated sample)
ZZZZZZ	F0079240.D	03/08/07	20:24	09:59	(unrelated sample)
ZZZZZZ	F0079241.D	03/08/07	20:56	10:31	(unrelated sample)
ZZZZZZ	F0079242.D	03/08/07	21:28	11:03	(unrelated sample)
ZZZZZZ	F0079243.D	03/08/07	22:00	11:35	(unrelated sample)

Volatile Internal Standard Area Summary

Job Number: T16445
Account: ITTXHO Shaw E & I, Inc.
Project: Longhorn Army Ammunition Plant

Check Std: VF2314-CC2305 **Injection Date:** 03/07/07
Lab File ID: F0079162.D **Injection Time:** 02:47
Instrument ID: GCMSF **Method:** SW846 8260B

	IS 1 AREA	RT	IS 2 AREA	RT	IS 3 AREA	RT
Check Std	671218	11.87	539776	15.94	225030	19.21
Upper Limit [a]	1342436	12.37	1079552	16.44	450060	19.71
Lower Limit [b]	335609	11.37	269888	15.44	112515	18.71

Lab Sample ID	IS 1 AREA	RT	IS 2 AREA	RT	IS 3 AREA	RT
VF2314-BS	763258	11.87	585053	15.95	230789	19.20
VF2314-MB	761236	11.87	554989	15.95	171804	19.22
ZZZZZZ	715869	11.87	528018	15.95	164528	19.21
ZZZZZZ	713777	11.87	527108	15.95	157669	19.22
ZZZZZZ	714014	11.87	515957	15.94	155677	19.21
T16445-5	696275	11.87	518491	15.94	157926	19.21
T16445-5MS	690323	11.87	531735	15.95	212449	19.21
T16445-5MSD	718441	11.88	554101	15.95	216829	19.21
T16445-2	673074	11.86	503844	15.94	144956	19.20
ZZZZZZ	676854	11.85	489839	15.93	140401	19.20
ZZZZZZ	668299	11.86	481794	15.94	136958	19.20
ZZZZZZ	668450	11.86	482234	15.94	127852	19.20
ZZZZZZ	650403	11.86	471126	15.94	137112	19.20
T16445-1	665672	11.86	484146	15.93	130143	19.20
T16445-2	676833	11.87	486651	15.94	127880	19.21
T16445-5	675974	11.87	487525	15.95	126817	19.21

IS 1 = Fluorobenzene
IS 2 = Chlorobenzene-D5
IS 3 = 1,4-Dichlorobenzene-d4

(a) Upper Limit = + 100% of check standard area; Retention time + 0.5 minutes.
(b) Lower Limit = -50% of check standard area; Retention time -0.5 minutes.

Volatile Internal Standard Area Summary

Job Number: T16445
Account: ITTXHO Shaw E & I, Inc.
Project: Longhorn Army Ammunition Plant

Check Std:	VF2315-CC2305	**Injection Date:**	03/07/07
Lab File ID:	F0079182.D	**Injection Time:**	13:19
Instrument ID:	GCMSF	**Method:**	SW846 8260B

	IS 1 AREA	RT	IS 2 AREA	RT	IS 3 AREA	RT
Check Std	698014	11.87	549946	15.95	231402	19.21
Upper Limit [a]	1396028	12.37	1099892	16.45	462804	19.71
Lower Limit [b]	349007	11.37	274973	15.45	115701	18.71

Lab Sample ID	IS 1 AREA	RT	IS 2 AREA	RT	IS 3 AREA	RT
VF2315-BS	751267	11.87	582464	15.95	220558	19.22
VF2315-MB	739731	11.88	521309	15.96	135288	19.23
T16445-15	709635	11.88	498169	15.96	130636	19.23
ZZZZZZ	713511	11.89	505249	15.96	133789	19.22
ZZZZZZ	670598	11.89	482656	15.97	127882	19.23
ZZZZZZ	692002	11.89	498481	15.96	134149	19.23
ZZZZZZ	694603	11.89	509623	15.97	139087	19.23
T16445-3 [c]	692901	11.89	523917	15.96	140544	19.22
T16445-3MS	703380	11.89	542581	15.97	203275	19.23
T16445-3MSD	721789	11.88	551007	15.96	199926	19.23
T16445-6	701179	11.88	509297	15.96	124874	19.22
T16445-8	672132	11.88	483654	15.95	147428	19.22
T16445-9	655210	11.87	474247	15.95	142235	19.21
T16445-10	658250	11.88	479882	15.95	141112	19.22
T16445-11	645297	11.88	465709	15.95	134763	19.22
T16445-14	633357	11.87	461754	15.95	129759	19.21
T16445-18	630021	11.88	455820	15.95	129210	19.21

IS 1 = Fluorobenzene
IS 2 = Chlorobenzene-D5
IS 3 = 1,4-Dichlorobenzene-d4

(a) Upper Limit = + 100% of check standard area; Retention time + 0.5 minutes.
(b) Lower Limit = -50% of check standard area; Retention time -0.5 minutes.
(c) For QC only.

Volatile Internal Standard Area Summary

Job Number: T16445
Account: ITTXHO Shaw E & I, Inc.
Project: Longhorn Army Ammunition Plant

Check Std: VF2318-CC2305
Lab File ID: F0079223.D
Instrument ID: GCMSF
Injection Date: 03/08/07
Injection Time: 10:59
Method: SW846 8260B

	IS 1 AREA	RT	IS 2 AREA	RT	IS 3 AREA	RT
Check Std	698975	11.87	551152	15.94	223338	19.21
Upper Limit [a]	1397950	12.37	1102304	16.44	446676	19.71
Lower Limit [b]	349488	11.37	275576	15.44	111669	18.71

Lab Sample ID	IS 1 AREA	RT	IS 2 AREA	RT	IS 3 AREA	RT
VF2318-BS	746410	11.87	580582	15.94	210100	19.21
VF2318-MB	745444	11.88	531800	15.96	140552	19.22
T16445-4	739935	11.88	531107	15.96	143733	19.22
T16445-4MS	707673	11.88	540763	15.95	204404	19.22
T16445-4MSD	763469	11.88	578582	15.95	218177	19.22
T16445-7	721619	11.89	534862	15.97	175880	19.23
T16445-12	648782	11.89	490210	15.97	162557	19.23
T16445-13	701074	11.89	520078	15.96	161875	19.23
T16445-3	671762	11.90	510964	15.97	157114	19.24
T16445-3	661266	11.89	484654	15.96	144861	19.24
T16445-6	650121	11.89	473895	15.97	134032	19.23
T16445-8	642529	11.89	461686	15.97	128039	19.23
T16445-9	627515	11.89	448085	15.96	125224	19.23
T16445-10	623811	11.88	456759	15.96	122979	19.22
T16445-14	620723	11.89	447599	15.96	114685	19.22
ZZZZZZ	612552	11.89	445736	15.96	121452	19.23
ZZZZZZ	570298	11.88	412673	15.95	110551*	19.22
ZZZZZZ	579619	11.87	421291	15.95	109077*	19.22
ZZZZZZ	599201	11.87	424322	15.95	107464*	19.21
ZZZZZZ	591981	11.87	425080	15.95	108784*	19.21

IS 1 = Fluorobenzene
IS 2 = Chlorobenzene-D5
IS 3 = 1,4-Dichlorobenzene-d4

(a) Upper Limit = + 100% of check standard area; Retention time + 0.5 minutes.
(b) Lower Limit = -50% of check standard area; Retention time -0.5 minutes.

Volatile Surrogate Recovery Summary

Job Number: T16445
Account: ITTXHO Shaw E & I, Inc.
Project: Longhorn Army Ammunition Plant

Method: SW846 8260B **Matrix:** AQ

Samples and QC shown here apply to the above method

Lab Sample ID	Lab File ID	S1	S2	S3	S4
T16445-1	F0079178.D	109.0	103.0	109.0	129.0
T16445-2	F0079179.D	104.0	101.0	107.0	128.0
T16445-2	F0079173.D	107.0	104.0	106.0	118.0
T16445-3	F0079232.D	107.0	102.0	100.0	112.0
T16445-3	F0079233.D	102.0	94.0	104.0	111.0
T16445-3	F0079190.D	106.0	106.0	102.0	123.0
T16445-4	F0079226.D	102.0	98.0	106.0	119.0
T16445-5	F0079180.D	105.0	104.0	108.0	129.0
T16445-5	F0079169.D	107.0	105.0	105.0	114.0
T16445-6	F0079234.D	103.0	98.0	105.0	115.0
T16445-6	F0079194.D	108.0	109.0	109.0	133.0
T16445-7	F0079229.D	104.0	94.0	104.0	106.0
T16445-8	F0079235.D	105.0	103.0	107.0	118.0
T16445-8	F0079196.D	102.0	100.0	106.0	113.0
T16445-9	F0079236.D	105.0	101.0	107.0	117.0
T16445-9	F0079197.D	107.0	104.0	109.0	117.0
T16445-10	F0079237.D	104.0	100.0	104.0	115.0
T16445-10	F0079198.D	109.0	107.0	108.0	116.0
T16445-11	F0079199.D	105.0	99.0	108.0	118.0
T16445-12	F0079230.D	105.0	98.0	104.0	105.0
T16445-13	F0079231.D	105.0	100.0	103.0	109.0
T16445-14	F0079238.D	104.0	97.0	105.0	123.0
T16445-14	F0079202.D	105.0	105.0	106.0	117.0
T16445-15	F0079185.D	106.0	102.0	112.0	131.0
T16445-18	F0079203.D	105.0	102.0	106.0	116.0
T16445-3MS	F0079191.D	106.0	106.0	101.0	99.0
T16445-3MSD	F0079192.D	107.0	107.0	104.0	103.0
T16445-4MS	F0079227.D	106.0	104.0	103.0	99.0
T16445-4MSD	F0079228.D	105.0	102.0	105.0	99.0
T16445-5MS	F0079170.D	110.0	109.0	107.0	102.0
T16445-5MSD	F0079171.D	112.0	108.0	107.0	103.0
VF2314-BS	F0079163.D	105.0	102.0	103.0	98.0
VF2314-MB	F0079164.D	104.0	100.0	106.0	113.0
VF2315-BS	F0079183.D	104.0	101.0	102.0	99.0
VF2315-MB	F0079184.D	103.0	98.0	109.0	129.0
VF2318-BS	F0079224.D	106.0	97.0	103.0	101.0
VF2318-MB	F0079225.D	103.0	97.0	108.0	121.0

Volatile Surrogate Recovery Summary

Job Number: T16445
Account: ITTXHO Shaw E & I, Inc.
Project: Longhorn Army Ammunition Plant

Method: SW846 8260B **Matrix:** AQ

Samples and QC shown here apply to the above method

Surrogate Compounds	Recovery Limits
S1 = Dibromofluoromethane	73-139%
S2 = 1,2-Dichloroethane-D4	66-139%
S3 = Toluene-D8	77-148%
S4 = 4-Bromofluorobenzene	84-150%

Initial Calibration Summary

Job Number: T16445
Account: ITTXHO Shaw E & I, Inc.
Project: Longhorn Army Ammunition Plant

Sample: VF2305-ICC2305
Lab FileID: F0078967.D

Response Factor Report GC/MS F

Method : C:\HPCHEM\1\METHODS\VF2305C.M (RTE Integrator)
Title : SW846 8260B and EPA 624
Last Update : Thu Mar 01 07:31:12 2007
Response via : Initial Calibration

Calibration Files
1 =F0078964.D 2 =F0078965.D 3 =F0078966.D
4 =F0078967.D 5 =F0078968.D 6 =F0078969.D 7 =F0078970.D

	Compound	1	2	3	4	5	6	7	Avg	%RSD
1) I	Fluorobenzene	ISTD								
2)	Dichlorodifluorom	0.157	0.162	0.153	0.171	0.181	0.178	0.196	0.171	8.89
3)P	Chloromethane	0.353	0.368	0.326	0.309	0.319	0.297	0.331	0.329	7.50
4)C	Vinyl Chloride	0.279	0.316	0.268	0.280	0.287	0.269	0.300	0.286	6.01
5)	Bromomethane	0.275	0.253	0.223	0.215	0.216	0.204	0.190	0.225	12.95
6)	Chloroethane	0.203	0.232	0.219	0.222	0.222	0.210	0.211	0.217	4.37
7)	Trichlorofluorome	0.137	0.154	0.142	0.159	0.166	0.162	0.164	0.155	7.23
8)	Acrolein	0.030	0.030	0.031	0.036	0.036	0.033	0.033	0.033	8.00
9)C	1,1-Dichloroethen	0.287	0.299	0.298	0.320	0.322	0.306	0.312	0.306	4.04
10)	Freon 113	0.174	0.190	0.191	0.225	0.225	0.213	0.216	0.205	9.65
11)	Acetone	0.065	0.062	0.057	0.052	0.053	0.053	0.052	0.056	9.61
12)	Iodomethane	0.405	0.432	0.438	0.436	0.447	0.434	0.445	0.434	3.22
13)	Methyl acetate	0.199	0.203	0.197	0.179	0.188	0.186	0.185	0.191	4.56
14)	Carbon Disulfide	0.833	0.878	0.869	0.908	0.930	0.885	0.918	0.889	3.74
15)	Methylene Chlorid	0.410	0.424	0.407	0.404	0.396	0.378	0.376	0.399	4.34
16)	Tert Butyl Alcoho	0.015	0.018	0.018	0.015	0.017	0.018	0.018	0.017	8.14
17)	trans-1,2-Dichlor	0.328	0.340	0.340	0.344	0.351	0.337	0.344	0.341	2.11
18)	Acrylonitrile	0.086	0.099	0.097	0.091	0.097	0.098	0.097	0.095	4.82
19)	Methyl Tert Butyl	0.577	0.603	0.572	0.555	0.578	0.587	0.594	0.581	2.70
20)	Hexane	0.300	0.281	0.283	0.341	0.346	0.320	0.315	0.312	8.32
21)P	1,1-Dichloroethan	0.428	0.457	0.436	0.445	0.450	0.430	0.435	0.440	2.44
22)	Vinyl acetate	0.513	0.554	0.582	0.564	0.569	0.552	0.517	0.550	4.74
23)	Di-isopropyl ethe	0.944	1.012	0.992	0.981	0.988	0.943	0.934	0.971	3.09
24)	Ethyl tert-butyl	0.721	0.735	0.733	0.737	0.753	0.739	0.749	0.738	1.43
25)	2,2-Dichloropropa	0.208	0.200	0.197	0.210	0.209	0.202	0.195	0.203	2.91
26)	cis-1,2-Dichloroe	0.282	0.305	0.302	0.308	0.307	0.302	0.307	0.302	3.03
27)	2-Butanone	0.113	0.118	0.120	0.105	0.111	0.112	0.109	0.113	4.48
28)	Bromochloromethan	0.124	0.142	0.145	0.146	0.147	0.149	0.150	0.143	6.13
29)C	Chloroform	0.343	0.363	0.358	0.362	0.364	0.353	0.362	0.358	2.09
30)	Tetrahydrofuran	0.048	0.035	0.033	0.030	0.031	0.031	0.029	0.034	19.44

----- Linear regression ----- Coefficient = 0.9988
Response Ratio = 0.00148 + 0.02898 *A

31)	1,1,1-Trichloroet	0.196	0.201	0.204	0.213	0.218	0.210	0.215	0.208	3.79
32)S	Dibromofluorometh	0.211	0.221	0.210	0.217	0.221	0.221	0.226	0.218	2.61
33)	Cyclohexane	0.390	0.405	0.413	0.479	0.485	0.453	0.447	0.439	8.43
34)	1,1-Dichloroprope	0.283	0.279	0.292	0.313	0.321	0.312	0.316	0.302	5.61
35)	Carbon Tetrachlor	0.142	0.161	0.164	0.176	0.181	0.177	0.183	0.169	8.57
36)S	1,2-Dichloroethan	0.159	0.173	0.166	0.161	0.165	0.162	0.166	0.165	2.76
37)	Benzene	1.089	1.108	1.092	1.113	1.134	1.098	1.119	1.108	1.43
38)	1,2-Dichloroethan	0.181	0.193	0.200	0.205	0.200	0.204	0.201	0.198	4.13
39)	tert-amyl methyl	0.712	0.774	0.759	0.736	0.767	0.769	0.782	0.757	3.26
40)	Trichloroethene	0.212	0.223	0.218	0.229	0.233	0.229	0.236	0.226	3.78
41)	Methylcyclohexane	0.318	0.332	0.335	0.391	0.401	0.384	0.388	0.364	9.38
42)C	1,2-Dichloropropa	0.320	0.304	0.310	0.316	0.320	0.310	0.318	0.314	1.90
43)	Dibromomethane	0.129	0.147	0.169	0.160	0.166	0.165	0.170	0.158	9.61

Initial Calibration Summary

Job Number: T16445
Account: ITTXHO Shaw E & I, Inc.
Project: Longhorn Army Ammunition Plant

Sample: VF2305-ICC2305
Lab FileID: F0078967.D


```
44)  1,4-Dioxane       0.002 0.002 0.002 0.002 0.003 0.003 0.003 0.002  17.15
            ----- Linear regression -----  Coefficient =  0.9989
              Response Ratio = -0.00341 + 0.00271 *A

45)  Bromodichlorometh 0.287 0.300 0.298 0.307 0.311 0.306 0.317 0.304   3.19
46)  2-Nitropropane    0.046 0.042 0.041 0.037 0.038 0.039 0.038 0.040   7.95
47)  2-Chloroethyl vin 0.094 0.104 0.122 0.125 0.136 0.143 0.152 0.125  16.72
            ----- Linear regression -----  Coefficient =  0.9983
              Response Ratio = -0.06248 + 0.15260 *A

48)  4-Methyl-2-pentan 0.229 0.239 0.249 0.234 0.246 0.246 0.237 0.240   3.06
49)  cis-1,3-Dichlorop 0.369 0.397 0.420 0.427 0.443 0.439 0.454 0.421   6.95

50) I   Chlorobenzene-d5      ----------------ISTD--------------------
51)S Toluene-d8        1.147 1.122 1.060 1.073 1.083 1.079 1.120 1.098   2.89
52)C Toluene           1.382 1.408 1.358 1.387 1.384 1.367 1.417 1.386   1.51
53)  trans-1,3-Dichlor 0.340 0.364 0.391 0.402 0.406 0.409 0.428 0.391   7.65
54)  1,1,2-Trichloroet 0.263 0.295 0.289 0.279 0.283 0.284 0.289 0.283   3.62
55)  Tetrachloroethene 0.272 0.280 0.293 0.302 0.309 0.299 0.307 0.294   4.70
56)  2-hexanone        0.170 0.180 0.203 0.194 0.206 0.211 0.208 0.196   8.04
57)  1,3-Dichloropropa 0.605 0.605 0.602 0.593 0.592 0.591 0.602 0.599   1.05
58)  Dibromochlorometh 0.254 0.312 0.303 0.296 0.299 0.304 0.315 0.298   6.92
59)  1,2-Dibromoethane 0.283 0.310 0.305 0.302 0.314 0.320 0.331 0.309   4.87
60)  1-Chlorohexane    0.464 0.467 0.465 0.505 0.517 0.509 0.535 0.495   5.83
61)P Chlorobenzene     0.877 0.857 0.851 0.870 0.877 0.867 0.897 0.871   1.73
62)  1,1,1,2-Tetrachlo 0.264 0.284 0.283 0.282 0.281 0.279 0.288 0.280   2.74
63)C Ethylbenzene      1.475 1.458 1.433 1.493 1.499 1.470 1.518 1.478   1.90
64)  m,p-Xylene        0.970 0.990 1.008 1.040 1.057 1.039 1.067 1.025   3.51
65)  o-Xylene          1.021 1.033 1.058 1.084 1.107 1.077 1.111 1.070   3.23
66)  Styrene           0.796 0.855 0.910 0.960 0.983 0.978 1.013 0.928   8.44
67)P Bromoform         0.142 0.077 0.184 0.179 0.195 0.199 0.205 0.169  26.85
            ----- Linear regression -----  Coefficient =  0.9995
              Response Ratio = -0.01246 + 0.20679 *A


68) I   1,4-Dichlorobenzene-d ----------------ISTD--------------------
69)  Isopropylbenzene  3.394 3.422 2.803 2.838 2.780 2.731 2.618 2.941  11.11
70)  Cyclohexanone     0.023 0.030 0.027 0.025 0.026 0.029 0.027 0.027   8.23
71)S 4-Bromofluorobenz 1.169 1.004 0.864 0.853 0.853 0.860 0.845 0.921  13.32
72)  Bromobenzene      0.997 0.963 0.842 0.837 0.823 0.822 0.788 0.867   9.15
73)P 1,1,2,2-Tetrachlo 1.339 1.320 1.146 1.011 1.011 1.030 0.983 1.120  13.59
74)  Trans-1,4-Dichlor 0.143 0.182 0.177 0.182 0.188 0.192 0.192 0.179   9.42
75)  1,2,3-Trichloropr 0.257 0.296 0.253 0.232 0.230 0.236 0.225 0.247  10.10
76)  n-Propylbenzene   4.567 4.426 4.010 4.105 4.023 3.954 3.865 4.136   6.29
77)  2-Chlorotoluene   3.164 2.888 2.531 2.500 2.416 2.351 2.285 2.591  12.31
78)  4-Chlorotoluene   2.569 2.376 2.183 2.187 2.133 2.116 2.076 2.234   7.90
79)  1,3,5-Trimethylbe 2.668 2.535 2.320 2.351 2.287 2.250 2.168 2.368   7.33
80)  sec-Butylbenzene  3.329 3.252 3.038 3.232 3.150 3.042 2.937 3.140   4.47
81)  1,3-Dichlorobenze 1.316 1.426 1.364 1.413 1.441 1.419 1.422 1.400   3.16
82)  4-Isopropyltoluen 2.408 2.304 2.224 2.403 2.346 2.277 2.220 2.312   3.37
83)  1,4-Dichlorobenze 1.528 1.430 1.389 1.429 1.420 1.423 1.424 1.435   3.04
84)  tert-Butylbenzene 0.533 0.438 0.430 0.445 0.436 0.429 0.410 0.446   8.90
85)  n-Butylbenzene    1.465 1.572 1.892 2.173 2.149 2.132 2.214 1.942  15.91
            ----- Linear regression -----  Coefficient =  0.9997
              Response Ratio = -0.08322 + 2.22219 *A

86)  1,2-Dichlorobenze 1.206 1.332 1.314 1.336 1.345 1.359 1.369 1.323   4.14
87)  1,2,4-Trimethylbe 2.566 2.449 2.311 2.410 2.354 2.310 2.242 2.377   4.53
88)  1,2-Dibromo-3-Chl 0.068 0.106 0.082 0.072 0.077 0.089 0.088 0.083  15.22
            ----- Linear regression -----  Coefficient =  0.9968
```

Initial Calibration Summary

Job Number: T16445
Account: ITTXHO Shaw E & I, Inc.
Project: Longhorn Army Ammunition Plant

Sample: VF2305-ICC2305
Lab FileID: F0078967.D

```
              Response Ratio = -0.00467 + 0.08863 *A

89)  1,2,4-Trichlorobe 0.166 0.135 0.302 0.403 0.468 0.530 0.585 0.370  47.33
            ----- Linear regression -----  Coefficient =  0.9944
              Response Ratio = -0.09820 + 0.59565 *A

90)  Hexachlorobutadie 0.058 0.088 0.170 0.207 0.204 0.208 0.202 0.162  38.83
            ----- Linear regression -----  Coefficient =  0.9993
              Response Ratio = -0.00579 + 0.20548 *A

91)  Naphthalene       0.526 0.280 0.475 0.606 0.781 0.975 1.125 0.681  43.48
          ----- Quadratic regression -----  Coefficient =  0.9974
              Response Ratio = -0.07686 + 0.74236 *A + 0.10172 *A^2

92)  1,2,3-Trichlorobe 0.167 0.113 0.217 0.276 0.334 0.389 0.421 0.274  41.95
            ----- Linear regression -----  Coefficient =  0.9938
              Response Ratio = -0.07169 + 0.43007 *A

--------------------------------------------------------------------------------
(#) = Out of Range

          VF2305C.M         Thu Mar 01 07:44:03 2007
```

Continuing Calibration Summary

Job Number: T16445
Account: ITTXHO Shaw E & I, Inc.
Project: Longhorn Army Ammunition Plant

Sample: VF2314-CC2305
Lab FileID: F0079162.D

Evaluate Continuing Calibration Report

Data File : C:\HPCHEM\1\DATA\VF2313\F0079162.D Vial: 2
Acq On : 7 Mar 2007 2:47 am Operator: lydiaj
Sample : cc2305-40 Inst : GC/MS F
Misc : ms3885,vf2314,,,,5,1,water Multiplr: 1.00
MS Integration Params: RTEINT.P

Method : C:\HPCHEM\1\METHODS\VF2305C.M (RTE Integrator)
Title : SW846 8260B and EPA 624
Last Update : Thu Mar 01 07:31:12 2007
Response via : Multiple Level Calibration

Min. RRF : 0.001 Min. Rel. Area : 50% Max. R.T. Dev 0.50min
Max. RRF Dev : 20% Max. Rel. Area : 200%

		Compound	AvgRF	CCRF	%Dev	Area%	Dev(min)
1	I	Fluorobenzene	1.000	1.000	0.0	82	-0.08
2		Dichlorodifluoromethane	0.171	0.149	12.9	72	-0.05
3	P	Chloromethane	0.329	0.336	-2.1	90	-0.06
4	C	Vinyl Chloride	0.286	0.303	-5.9	89	-0.06
5		Bromomethane	0.225	0.230	-2.2	88	-0.07
6		Chloroethane	0.217	0.235	-8.3	87	-0.07
7		Trichlorofluoromethane	0.155	0.171	-10.3	89	-0.06
8		Acrolein	0.033	0.030	9.1	69	-0.08
9	C	1,1-Dichloroethene	0.306	0.310	-1.3	80	-0.07
10		Freon 113	0.205	0.205	0.0	75	-0.07
11		Acetone	0.056	0.058	-3.6	93	-0.07
12		Iodomethane	0.434	0.433	0.2	82	-0.07
13		Methyl acetate	0.191	0.220	-15.2	101	-0.07
14		Carbon Disulfide	0.889	0.861	3.1	78	-0.07
15		Methylene Chloride	0.399	0.417	-4.5	85	-0.07
16		Tert Butyl Alcohol	0.017	0.020	-17.6	106	-0.08
17		trans-1,2-Dichloroethene	0.341	0.353	-3.5	85	-0.07
18		Acrylonitrile	0.095	0.108	-13.7	97	-0.07
19		Methyl Tert Butyl Ether	0.581	0.615	-5.9	91	-0.08
20		Hexane	0.312	0.282	9.6	68	-0.08
21	P	1,1-Dichloroethane	0.440	0.464	-5.5	86	-0.08
22		Vinyl acetate	0.550	0.626	-13.8	92	-0.08
23		Di-isopropyl ether	0.971	1.067	-9.9	90	-0.07
24		Ethyl tert-butyl ether	0.738	0.798	-8.1	89	-0.07
25		2,2-Dichloropropane	0.203	0.181	10.8	71	-0.07
26		cis-1,2-Dichloroethene	0.302	0.321	-6.3	86	-0.08
27		2-Butanone	0.113	0.129	-14.2	101	-0.08
28		Bromochloromethane	0.143	0.153	-7.0	87	-0.08
29	C	Chloroform	0.358	0.376	-5.0	86	-0.08
30		Tetrahydrofuran	0.034	0.036	-5.9	99	-0.08
31		1,1,1-Trichloroethane	0.208	0.219	-5.3	85	-0.08
32	S	Dibromofluoromethane	0.218	0.250	-14.7	95	-0.07
33		Cyclohexane	0.439	0.461	-5.0	79	-0.08
34		1,1-Dichloropropene	0.302	0.319	-5.6	84	-0.08
35		Carbon Tetrachloride	0.169	0.180	-6.5	84	-0.08
36	S	1,2-Dichloroethane-d4	0.165	0.192	-16.4	98	-0.08
37		Benzene	1.108	1.171	-5.7	87	-0.08
38		1,2-Dichloroethane	0.198	0.218	-10.1	88	-0.08
39		tert-amyl methyl ether	0.757	0.810	-7.0	91	-0.08
40		Trichloroethene	0.226	0.238	-5.3	85	-0.08
41		Methylcyclohexane	0.364	0.363	0.3	76	-0.08
42	C	1,2-Dichloropropane	0.314	0.342	-8.9	89	-0.08

Continuing Calibration Summary

Job Number: T16445
Account: ITTXHO Shaw E & I, Inc.
Project: Longhorn Army Ammunition Plant

Sample: VF2314-CC2305
Lab FileID: F0079162.D

43		Dibromomethane	0.158	0.173	-9.5	89	-0.09
44		1,4-Dioxane	0.002	0.003	-50.0#	100	-0.08
45		Bromodichloromethane	0.304	0.328	-7.9	88	-0.08
46		2-Nitropropane	0.040	0.045	-12.5	99	-0.09
47		2-Chloroethyl vinyl ether	0.125	0.133	-6.4	88	-0.08
48		4-Methyl-2-pentanone	0.240	0.290	-20.8#	102	-0.09
49		cis-1,3-Dichloropropene	0.421	0.442	-5.0	85	-0.08
50	I	Chlorobenzene-d5	1.000	1.000	0.0	89	-0.08
51	S	Toluene-d8	1.098	1.140	-3.8	94	-0.08
52	C	Toluene	1.386	1.356	2.2	87	-0.08
53		trans-1,3-Dichloropropene	0.391	0.395	-1.0	87	-0.08
54		1,1,2-Trichloroethane	0.283	0.288	-1.8	91	-0.08
55		Tetrachloroethene	0.294	0.293	0.3	86	-0.09
56		2-hexanone	0.196	0.223	-13.8	102	-0.08
57		1,3-Dichloropropane	0.599	0.605	-1.0	90	-0.08
58		Dibromochloromethane	0.298	0.306	-2.7	92	-0.08
59		1,2-Dibromoethane	0.309	0.320	-3.6	94	-0.09
60		1-Chlorohexane	0.495	0.458	7.5	80	-0.09
61	P	Chlorobenzene	0.871	0.866	0.6	88	-0.09
62		1,1,1,2-Tetrachloroethane	0.280	0.283	-1.1	89	-0.09
63	C	Ethylbenzene	1.478	1.455	1.6	86	-0.09
64		m,p-Xylene	1.025	1.024	0.1	87	-0.09
65		o-Xylene	1.070	1.091	-2.0	89	-0.09
66		Styrene	0.928	0.947	-2.0	87	-0.08
67	P	Bromoform	0.169	0.201	-18.9	100	-0.09
68	I	1,4-Dichlorobenzene-d4	1.000	1.000	0.0	90	-0.09
69		Isopropylbenzene	2.941	2.700	8.2	86	-0.08
70		Cyclohexanone	0.027	0.042	-55.6#	149	-0.10
71	S	4-Bromofluorobenzene	0.921	0.903	2.0	96	-0.09
72		Bromobenzene	0.867	0.837	3.5	90	-0.10
73	P	1,1,2,2-Tetrachloroethane	1.120	1.088	2.9	97	-0.09
74		Trans-1,4-Dichloro-2-Butene	0.179	0.171	4.5	85	-0.09
75		1,2,3-Trichloropropane	0.247	0.252	-2.0	99	-0.10
76		n-Propylbenzene	4.136	3.884	6.1	86	-0.09
77		2-Chlorotoluene	2.591	2.414	6.8	87	-0.09
78		4-Chlorotoluene	2.234	2.100	6.0	87	-0.10
79		1,3,5-Trimethylbenzene	2.368	2.226	6.0	86	-0.09
80		sec-Butylbenzene	3.140	3.014	4.0	84	-0.09
81		1,3-Dichlorobenzene	1.400	1.412	-0.9	90	-0.10
82		4-Isopropyltoluene	2.312	2.210	4.4	83	-0.09
83		1,4-Dichlorobenzene	1.435	1.389	3.2	88	-0.09
84		tert-Butylbenzene	0.446	0.422	5.4	86	-0.10
85		n-Butylbenzene	1.942	1.915	1.4	80	-0.10
86		1,2-Dichlorobenzene	1.323	1.344	-1.6	91	-0.09
87		1,2,4-Trimethylbenzene	2.377	2.293	3.5	86	-0.09
88		1,2-Dibromo-3-Chloropropane	0.083	0.075	9.6	94	-0.09
89		1,2,4-Trichlorobenzene	0.370	0.387	-4.6	87	-0.10
90		Hexachlorobutadiene	0.162	0.189	-16.7	83	-0.11
91		Naphthalene	0.681	0.633	7.0	94	-0.11
92		1,2,3-Trichlorobenzene	0.274	0.283	-3.3	93	-0.12

Average % D = 7.3

(#) = Out of Range SPCC's out = 0 CCC's out = 0
F0078967.D VF2305C.M Wed Mar 07 10:06:33 2007

Continuing Calibration Summary

Job Number: T16445
Account: ITTXHO Shaw E & I, Inc.
Project: Longhorn Army Ammunition Plant

Sample: VF2315-CC2305
Lab FileID: F0079182.D

Evaluate Continuing Calibration Report

Data File : C:\HPCHEM\1\DATA\VF2315~1\F0079182.D Vial: 2
Acq On : 7 Mar 2007 1:19 pm Operator: lydiaj
Sample : cc2305-40 Inst : GC/MS F
Misc : ms3885,vf2315,,,,5,1,water Multiplr: 1.00
MS Integration Params: RTEINT.P

Method : C:\HPCHEM\1\METHODS\VF2305C.M (RTE Integrator)
Title : SW846 8260B and EPA 624
Last Update : Thu Mar 01 07:31:12 2007
Response via : Multiple Level Calibration

Min. RRF : 0.001 Min. Rel. Area : 50% Max. R.T. Dev 0.50min
Max. RRF Dev : 20% Max. Rel. Area : 200%

		Compound	AvgRF	CCRF	%Dev	Area%	Dev(min)
1	I	Fluorobenzene	1.000	1.000	0.0	86	-0.08
2		Dichlorodifluoromethane	0.171	0.148	13.5	74	-0.04
3	P	Chloromethane	0.329	0.330	-0.3	92	-0.05
4	C	Vinyl Chloride	0.286	0.292	-2.1	90	-0.06
5		Bromomethane	0.225	0.223	0.9	89	-0.07
6		Chloroethane	0.217	0.226	-4.1	88	-0.06
7		Trichlorofluoromethane	0.155	0.162	-4.5	87	-0.06
8		Acrolein	0.033	0.034	-3.0	81	-0.08
9	C	1,1-Dichloroethene	0.306	0.297	2.9	80	-0.07
10		Freon 113	0.205	0.193	5.9	73	-0.07
11		Acetone	0.056	0.051	8.9	84	-0.07
12		Iodomethane	0.434	0.399	8.1	78	-0.07
13		Methyl acetate	0.191	0.208	-8.9	100	-0.07
14		Carbon Disulfide	0.889	0.797	10.3	75	-0.07
15		Methylene Chloride	0.399	0.419	-5.0	89	-0.07
16		Tert Butyl Alcohol	0.017	0.019	-11.8	103	-0.08
17		trans-1,2-Dichloroethene	0.341	0.339	0.6	84	-0.07
18		Acrylonitrile	0.095	0.092	3.2	86	-0.07
19		Methyl Tert Butyl Ether	0.581	0.574	1.2	89	-0.07
20		Hexane	0.312	0.316	-1.3	79	-0.08
21	P	1,1-Dichloroethane	0.440	0.453	-3.0	87	-0.08
22		Vinyl acetate	0.550	0.609	-10.7	93	-0.08
23		Di-isopropyl ether	0.971	1.066	-9.8	93	-0.07
24		Ethyl tert-butyl ether	0.738	0.773	-4.7	90	-0.07
25		2,2-Dichloropropane	0.203	0.210	-3.4	86	-0.07
26		cis-1,2-Dichloroethene	0.302	0.307	-1.7	86	-0.08
27		2-Butanone	0.113	0.108	4.4	88	-0.08
28		Bromochloromethane	0.143	0.147	-2.8	86	-0.08
29	C	Chloroform	0.358	0.370	-3.4	88	-0.08
30		Tetrahydrofuran	0.034	0.032	5.9	91	-0.08
31		1,1,1-Trichloroethane	0.208	0.210	-1.0	84	-0.08
32	S	Dibromofluoromethane	0.218	0.227	-4.1	90	-0.08
33		Cyclohexane	0.439	0.451	-2.7	81	-0.08
34		1,1-Dichloropropene	0.302	0.317	-5.0	87	-0.08
35		Carbon Tetrachloride	0.169	0.174	-3.0	85	-0.08
36	S	1,2-Dichloroethane-d4	0.165	0.176	-6.7	94	-0.08
37		Benzene	1.108	1.127	-1.7	87	-0.08
38		1,2-Dichloroethane	0.198	0.213	-7.6	89	-0.08
39		tert-amyl methyl ether	0.757	0.777	-2.6	91	-0.08
40		Trichloroethene	0.226	0.232	-2.7	87	-0.08
41		Methylcyclohexane	0.364	0.371	-1.9	81	-0.08
42	C	1,2-Dichloropropane	0.314	0.336	-7.0	91	-0.09

Continuing Calibration Summary

Job Number: T16445
Account: ITTXHO Shaw E & I, Inc.
Project: Longhorn Army Ammunition Plant

Sample: VF2315-CC2305
Lab FileID: F0079182.D

43		Dibromomethane	0.158	0.169	-7.0	91	-0.09
44		1,4-Dioxane	0.002	0.003	-50.0#	106	-0.09
45		Bromodichloromethane	0.304	0.321	-5.6	90	-0.08
46		2-Nitropropane	0.040	0.042	-5.0	98	-0.08
47		2-Chloroethyl vinyl ether	0.125	0.124	0.8	85	-0.08
48		4-Methyl-2-pentanone	0.240	0.236	1.7	87	-0.09
49		cis-1,3-Dichloropropene	0.421	0.461	-9.5	93	-0.08
50	I	Chlorobenzene-d5	1.000	1.000	0.0	90	-0.08
51	S	Toluene-d8	1.098	1.096	0.2	92	-0.08
52	C	Toluene	1.386	1.363	1.7	89	-0.08
53		trans-1,3-Dichloropropene	0.391	0.405	-3.6	91	-0.07
54		1,1,2-Trichloroethane	0.283	0.289	-2.1	93	-0.08
55		Tetrachloroethene	0.294	0.299	-1.7	89	-0.09
56		2-hexanone	0.196	0.182	7.1	85	-0.08
57		1,3-Dichloropropane	0.599	0.606	-1.2	92	-0.08
58		Dibromochloromethane	0.298	0.306	-2.7	94	-0.08
59		1,2-Dibromoethane	0.309	0.310	-0.3	93	-0.08
60		1-Chlorohexane	0.495	0.501	-1.2	90	-0.09
61	P	Chlorobenzene	0.871	0.876	-0.6	91	-0.09
62		1,1,1,2-Tetrachloroethane	0.280	0.286	-2.1	92	-0.08
63	C	Ethylbenzene	1.478	1.474	0.3	89	-0.09
64		m,p-Xylene	1.025	1.039	-1.4	90	-0.08
65		o-Xylene	1.070	1.102	-3.0	92	-0.09
66		Styrene	0.928	0.964	-3.9	91	-0.08
67	P	Bromoform	0.169	0.198	-17.2	100	-0.09
68	I	1,4-Dichlorobenzene-d4	1.000	1.000	0.0	93	-0.09
69		Isopropylbenzene	2.941	2.758	6.2	90	-0.08
70		Cyclohexanone	0.027	0.039	-44.4#	142	-0.10
71	S	4-Bromofluorobenzene	0.921	0.840	8.8	92	-0.09
72		Bromobenzene	0.867	0.840	3.1	93	-0.09
73	P	1,1,2,2-Tetrachloroethane	1.120	1.065	4.9	98	-0.09
74		Trans-1,4-Dichloro-2-Butene	0.179	0.176	1.7	90	-0.09
75		1,2,3-Trichloropropane	0.247	0.240	2.8	96	-0.09
76		n-Propylbenzene	4.136	4.041	2.3	92	-0.09
77		2-Chlorotoluene	2.591	2.463	4.9	92	-0.09
78		4-Chlorotoluene	2.234	2.117	5.2	90	-0.10
79		1,3,5-Trimethylbenzene	2.368	2.281	3.7	90	-0.09
80		sec-Butylbenzene	3.140	3.101	1.2	89	-0.09
81		1,3-Dichlorobenzene	1.400	1.439	-2.8	95	-0.09
82		4-Isopropyltoluene	2.312	2.294	0.8	89	-0.09
83		1,4-Dichlorobenzene	1.435	1.431	0.3	93	-0.09
84		tert-Butylbenzene	0.446	0.438	1.8	91	-0.10
85		n-Butylbenzene	1.942	2.030	-4.5	87	-0.10
86		1,2-Dichlorobenzene	1.323	1.352	-2.2	94	-0.09
87		1,2,4-Trimethylbenzene	2.377	2.379	-0.1	92	-0.09
88		1,2-Dibromo-3-Chloropropane	0.083	0.071	14.5	92	-0.10
89		1,2,4-Trichlorobenzene	0.370	0.343	7.3	79	-0.09
90		Hexachlorobutadiene	0.162	0.192	-18.5	86	-0.11
91		Naphthalene	0.681	0.550	19.2	84	-0.12
92		1,2,3-Trichlorobenzene	0.274	0.247	9.9	83	-0.12

Average % D = 5.5

(#) = Out of Range SPCC's out = 0 CCC's out = 0
F0078967.D VF2305C.M Thu Mar 08 11:48:42 2007

Continuing Calibration Summary

Job Number: T16445
Account: ITTXHO Shaw E & I, Inc.
Project: Longhorn Army Ammunition Plant

Sample: VF2318-CC2305
Lab FileID: F0079223.D

Evaluate Continuing Calibration Report

Data File : C:\HPCHEM\1\DATA\VF2318~1\F0079223.D Vial: 2
Acq On : 8 Mar 2007 10:59 am Operator: lydiaj
Sample : cc2305-40 Inst : GC/MS F
Misc : ms3889,vf2318,,,,5,1,water Multiplr: 1.00
MS Integration Params: RTEINT.P

Method : C:\HPCHEM\1\METHODS\VF2305C.M (RTE Integrator)
Title : SW846 8260B and EPA 624
Last Update : Thu Mar 01 07:31:12 2007
Response via : Multiple Level Calibration

Min. RRF : 0.001 Min. Rel. Area : 50% Max. R.T. Dev 0.50min
Max. RRF Dev : 20% Max. Rel. Area : 200%

		Compound	AvgRF	CCRF	%Dev	Area%	Dev(min)
1	I	Fluorobenzene	1.000	1.000	0.0	86	-0.08
2		Dichlorodifluoromethane	0.171	0.134	21.6#	68	-0.04
3	P	Chloromethane	0.329	0.313	4.9	87	-0.05
4	C	Vinyl Chloride	0.286	0.273	4.5	84	-0.06
5		Bromomethane	0.225	0.222	1.3	89	-0.07
6		Chloroethane	0.217	0.229	-5.5	89	-0.06
7		Trichlorofluoromethane	0.155	0.168	-8.4	91	-0.07
8		Acrolein	0.033	0.033	0.0	81	-0.07
9	C	1,1-Dichloroethene	0.306	0.303	1.0	81	-0.07
10		Freon 113	0.205	0.207	-1.0	79	-0.07
11		Acetone	0.056	0.042	25.0#	70	-0.07
12		Iodomethane	0.434	0.423	2.5	83	-0.07
13		Methyl acetate	0.191	0.176	7.9	84	-0.07
14		Carbon Disulfide	0.889	0.841	5.4	80	-0.08
15		Methylene Chloride	0.399	0.413	-3.5	88	-0.07
16		Tert Butyl Alcohol	0.017	0.017	0.0	92	-0.07
17		trans-1,2-Dichloroethene	0.341	0.350	-2.6	87	-0.07
18		Acrylonitrile	0.095	0.078	17.9	73	-0.07
19		Methyl Tert Butyl Ether	0.581	0.562	3.3	87	-0.07
20		Hexane	0.312	0.315	-1.0	79	-0.08
21	P	1,1-Dichloroethane	0.440	0.464	-5.5	89	-0.07
22		Vinyl acetate	0.550	0.547	0.5	83	-0.07
23		Di-isopropyl ether	0.971	1.060	-9.2	93	-0.07
24		Ethyl tert-butyl ether	0.738	0.774	-4.9	90	-0.07
25		2,2-Dichloropropane	0.203	0.232	-14.3	95	-0.07
26		cis-1,2-Dichloroethene	0.302	0.324	-7.3	90	-0.08
27		2-Butanone	0.113	0.090	20.4#	74	-0.08
28		Bromochloromethane	0.143	0.149	-4.2	88	-0.08
29	C	Chloroform	0.358	0.387	-8.1	92	-0.08
30		Tetrahydrofuran	0.034	0.028	17.6	80	-0.08
31		1,1,1-Trichloroethane	0.208	0.224	-7.7	90	-0.08
32	S	Dibromofluoromethane	0.218	0.236	-8.3	93	-0.07
33		Cyclohexane	0.439	0.472	-7.5	85	-0.08
34		1,1-Dichloropropene	0.302	0.328	-8.6	90	-0.08
35		Carbon Tetrachloride	0.169	0.187	-10.7	91	-0.07
36	S	1,2-Dichloroethane-d4	0.165	0.169	-2.4	90	-0.08
37		Benzene	1.108	1.177	-6.2	91	-0.07
38		1,2-Dichloroethane	0.198	0.206	-4.0	86	-0.08
39		tert-amyl methyl ether	0.757	0.767	-1.3	90	-0.08
40		Trichloroethene	0.226	0.248	-9.7	93	-0.08
41		Methylcyclohexane	0.364	0.394	-8.2	87	-0.08
42	C	1,2-Dichloropropane	0.314	0.345	-9.9	94	-0.08

Continuing Calibration Summary

Job Number: T16445
Account: ITTXHO Shaw E & I, Inc.
Project: Longhorn Army Ammunition Plant

Sample: VF2318-CC2305
Lab FileID: F0079223.D

43		Dibromomethane	0.158	0.163	-3.2	88	-0.08
44		1,4-Dioxane	0.002	0.002	0.0	89	-0.08
45		Bromodichloromethane	0.304	0.332	-9.2	93	-0.08
46		2-Nitropropane	0.040	0.036	10.0	84	-0.08
47		2-Chloroethyl vinyl ether	0.125	0.110	12.0	76	-0.08
48		4-Methyl-2-pentanone	0.240	0.206	14.2	76	-0.08
49		cis-1,3-Dichloropropene	0.421	0.471	-11.9	95	-0.08
50	I	Chlorobenzene-d5	1.000	1.000	0.0	90	-0.08
51	S	Toluene-d8	1.098	1.138	-3.6	96	-0.08
52	C	Toluene	1.386	1.437	-3.7	94	-0.08
53		trans-1,3-Dichloropropene	0.391	0.405	-3.6	91	-0.07
54		1,1,2-Trichloroethane	0.283	0.284	-0.4	92	-0.08
55		Tetrachloroethene	0.294	0.324	-10.2	97	-0.09
56		2-hexanone	0.196	0.157	19.9	73	-0.08
57		1,3-Dichloropropane	0.599	0.582	2.8	89	-0.08
58		Dibromochloromethane	0.298	0.305	-2.3	93	-0.08
59		1,2-Dibromoethane	0.309	0.301	2.6	90	-0.08
60		1-Chlorohexane	0.495	0.527	-6.5	94	-0.08
61	P	Chlorobenzene	0.871	0.923	-6.0	96	-0.09
62		1,1,1,2-Tetrachloroethane	0.280	0.299	-6.8	96	-0.09
63	C	Ethylbenzene	1.478	1.578	-6.8	96	-0.09
64		m,p-Xylene	1.025	1.080	-5.4	94	-0.08
65		o-Xylene	1.070	1.152	-7.7	96	-0.08
66		Styrene	0.928	0.989	-6.6	93	-0.08
67	P	Bromoform	0.169	0.180	-6.5	91	-0.09
68	I	1,4-Dichlorobenzene-d4	1.000	1.000	0.0	90	-0.09
69		Isopropylbenzene	2.941	3.019	-2.7	95	-0.08
70		Cyclohexanone	0.027	0.046	-70.4#	163	-0.10
71	S	4-Bromofluorobenzene	0.921	0.912	1.0	96	-0.09
72		Bromobenzene	0.867	0.917	-5.8	98	-0.09
73	P	1,1,2,2-Tetrachloroethane	1.120	1.007	10.1	89	-0.09
74		Trans-1,4-Dichloro-2-Butene	0.179	0.160	10.6	79	-0.10
75		1,2,3-Trichloropropane	0.247	0.233	5.7	90	-0.09
76		n-Propylbenzene	4.136	4.335	-4.8	95	-0.09
77		2-Chlorotoluene	2.591	2.658	-2.6	95	-0.09
78		4-Chlorotoluene	2.234	2.314	-3.6	95	-0.10
79		1,3,5-Trimethylbenzene	2.368	2.500	-5.6	95	-0.08
80		sec-Butylbenzene	3.140	3.327	-6.0	92	-0.09
81		1,3-Dichlorobenzene	1.400	1.523	-8.8	97	-0.09
82		4-Isopropyltoluene	2.312	2.458	-6.3	92	-0.09
83		1,4-Dichlorobenzene	1.435	1.494	-4.1	94	-0.09
84		tert-Butylbenzene	0.446	0.456	-2.2	92	-0.10
85		n-Butylbenzene	1.942	2.065	-6.3	85	-0.10
86		1,2-Dichlorobenzene	1.323	1.387	-4.8	93	-0.09
87		1,2,4-Trimethylbenzene	2.377	2.512	-5.7	94	-0.09
88		1,2-Dibromo-3-Chloropropane	0.083	0.069	16.9	85	-0.09
89		1,2,4-Trichlorobenzene	0.370	0.322	13.0	72	-0.09
90		Hexachlorobutadiene	0.162	0.201	-24.1#	87	-0.10
91		Naphthalene	0.681	0.464	31.9#	69	-0.11
92		1,2,3-Trichlorobenzene	0.274	0.216	21.2#	70	-0.11

Average % D = 8.2

(#) = Out of Range SPCC's out = 0 CCC's out = 0

F0078967.D VF2305C.M Fri Mar 09 16:10:50 2007

General Chemistry

QC Data Summaries

Includes the following where applicable:

- Method Blank and Blank Spike Summaries
- Duplicate Summaries
- Matrix Spike Summaries
- Instrument Runlogs/QC

METHOD BLANK AND SPIKE RESULTS SUMMARY
GENERAL CHEMISTRY

Login Number: T16445
Account: ITTXHO - Shaw E & I, Inc.
Project: Longhorn Army Ammunition Plant

Analyte	Batch ID	RL	MB Result	Units	Spike Amount	BSP Result	BSP %Recov	QC Limits
Alkalinity, Total as CaCO3	GN11375	5.0	<5.0	mg/l	2500	2500	100.0	80-120%
Chloride	GN11343	1.0	<1.0	mg/l	xxxxxxxx	1020	102.0	92-107%
Nitrogen, Nitrate + Nitrite	GN11291	0.050	<0.050	mg/l	0.500	0.51	102.0	89-112%
Nitrogen, Nitrate + Nitrite	GN11301	0.050	<0.050	mg/l	0.500	0.51	102.0	89-112%
Nitrogen, Nitrite	GN11290	0.050	<0.050	mg/l	0.500	0.49	98.0	89-117%
Nitrogen, Nitrite	GN11300	0.050	<0.050	mg/l	0.500	0.49	98.0	89-117%
Sulfate	GN11356	10	<10	mg/l	100	95.0	95.0	80-120%
Sulfate	GN11356			mg/l	xxxxxxxx		*	80-120%
Sulfide	GN11313	0.20	<0.20	mg/l	1600	1380	85.0	80-120%
Total Organic Carbon	GN11304	1.0	<1.0	mg/l	25.0	26.0	104.0	83-110%
Total Organic Carbon	GN11311	1.0	<1.0	mg/l	25.0	25.0	100.0	83-110%
Total Organic Carbon	GN11317	1.0	<1.0	mg/l	25.0	25.0	100.0	83-110%

Associated Samples:
Batch GN11290: T16445-1, T16445-10, T16445-11, T16445-12, T16445-13, T16445-14, T16445-2, T16445-3, T16445-4, T16445-5, T16445-6, T16445-7, T16445-8, T16445-9
Batch GN11291: T16445-1, T16445-10, T16445-11, T16445-12, T16445-13, T16445-14, T16445-2, T16445-3, T16445-4, T16445-5, T16445-6, T16445-7, T16445-8, T16445-9
Batch GN11300: T16445-18
Batch GN11301: T16445-18
Batch GN11304: T16445-18
Batch GN11311: T16445-1, T16445-2, T16445-3, T16445-4, T16445-5, T16445-6, T16445-7
Batch GN11313: T16445-1, T16445-10, T16445-11, T16445-12, T16445-13, T16445-14, T16445-18, T16445-2, T16445-3, T16445-4, T16445-5, T16445-6, T16445-7, T16445-8, T16445-9
Batch GN11317: T16445-10, T16445-11, T16445-12, T16445-13, T16445-14, T16445-8, T16445-9
Batch GN11343: T16445-1, T16445-10, T16445-11, T16445-12, T16445-13, T16445-14, T16445-18, T16445-2, T16445-3, T16445-4, T16445-5, T16445-6, T16445-7, T16445-8, T16445-9
Batch GN11356: T16445-1, T16445-10, T16445-11, T16445-12, T16445-13, T16445-14, T16445-18, T16445-2, T16445-3, T16445-4, T16445-5, T16445-6, T16445-7, T16445-8, T16445-9
Batch GN11375: T16445-1, T16445-10, T16445-11, T16445-12, T16445-13, T16445-14, T16445-18, T16445-2, T16445-3, T16445-4, T16445-5, T16445-6, T16445-7, T16445-8, T16445-9
(*) Outside of QC limits

DUPLICATE RESULTS SUMMARY
GENERAL CHEMISTRY

Login Number: T16445
Account: ITTXHO - Shaw E & I, Inc.
Project: Longhorn Army Ammunition Plant

Analyte	Batch ID	QC Sample	Units	Original Result	DUP Result	RPD	QC Limits
Alkalinity, Total as CaCO3	GN11375	T16445-5	mg/l	457	457	0.0	0-10%
Chloride	GN11343	T16445-5	mg/l	253	258	2.0	0-5%
Nitrogen, Nitrate + Nitrite	GN11291	T16445-5	mg/l	0.0050 U	<0.050	0.0	0-10%
Nitrogen, Nitrate + Nitrite	GN11301	T16445-18	mg/l	2.7	2.7	0.0	0-10%
Nitrogen, Nitrite	GN11290	T16445-5	mg/l	0.0030 U	<0.050	0.0	0-10%
Nitrogen, Nitrite	GN11300	T16445-18	mg/l	0.0030 U	<0.050	0.0	0-10%
Sulfate	GN11356	T16445-5	mg/l	286	291	1.7	0-20%
Sulfide	GN11313	T16445-5	mg/l	0.0 B	<0.20	0.0	0-20%
Total Organic Carbon	GN11304	T16445-18	mg/l	6.0	6.0	0.0	0-11%
Total Organic Carbon	GN11311	T16445-5	mg/l	2.0	2.0	0.0	0-11%
Total Organic Carbon	GN11317	T16445-8	mg/l	3.0	3.0	0.0	0-11%
pH	GN11323	T16445-5	su	7.1	7.1	0.0	0-6.8%
pH	GN11323	T16445-7	su	11.2	11.1	1.8	0-6.8%
pH	GN11323	T16445-18	su	6.7	7.0	3.5	0-6.8%

Associated Samples:
Batch GN11290: T16445-1, T16445-10, T16445-11, T16445-12, T16445-13, T16445-14, T16445-2, T16445-3, T16445-4, T16445-5, T16445-6, T16445-7, T16445-8, T16445-9
Batch GN11291: T16445-1, T16445-10, T16445-11, T16445-12, T16445-13, T16445-14, T16445-2, T16445-3, T16445-4, T16445-5, T16445-6, T16445-7, T16445-8, T16445-9
Batch GN11300: T16445-18
Batch GN11301: T16445-18
Batch GN11304: T16445-18
Batch GN11311: T16445-1, T16445-2, T16445-3, T16445-4, T16445-5, T16445-6, T16445-7
Batch GN11313: T16445-1, T16445-10, T16445-11, T16445-12, T16445-13, T16445-14, T16445-18, T16445-2, T16445-3, T16445-4, T16445-5, T16445-6, T16445-7, T16445-8, T16445-9
Batch GN11317: T16445-10, T16445-11, T16445-12, T16445-13, T16445-14, T16445-8, T16445-9
Batch GN11323: T16445-1, T16445-10, T16445-11, T16445-12, T16445-13, T16445-14, T16445-18, T16445-2, T16445-3, T16445-4, T16445-5, T16445-6, T16445-7, T16445-8, T16445-9
Batch GN11343: T16445-1, T16445-10, T16445-11, T16445-12, T16445-13, T16445-14, T16445-18, T16445-2, T16445-3, T16445-4, T16445-5, T16445-6, T16445-7, T16445-8, T16445-9
Batch GN11356: T16445-1, T16445-10, T16445-11, T16445-12, T16445-13, T16445-14, T16445-18, T16445-2, T16445-3, T16445-4, T16445-5, T16445-6, T16445-7, T16445-8, T16445-9
Batch GN11375: T16445-1, T16445-10, T16445-11, T16445-12, T16445-13, T16445-14, T16445-18, T16445-2, T16445-3, T16445-4, T16445-5, T16445-6, T16445-7, T16445-8, T16445-9
(*) Outside of QC limits

MATRIX SPIKE RESULTS SUMMARY
GENERAL CHEMISTRY

Login Number: T16445
Account: ITTXHO - Shaw E & I, Inc.
Project: Longhorn Army Ammunition Plant

Analyte	Batch ID	QC Sample	Units	Original Result	Spike Amount	MS Result	%Rec	QC Limits
Alkalinity, Total as CaCO3	GN11375	T16445-5	mg/l	457	125	590	106.0	79-122%
Chloride	GN11343	T16445-5	mg/l	253	xxxxxxxx	462	104.0	81-119%
Nitrogen, Nitrate + Nitrite	GN11291	T16445-5	mg/l	0.0050 U	0.100	0.097	97.0	80-119%
Nitrogen, Nitrate + Nitrite	GN11291	T16445-5	mg/l	0.0050 U	0.100	0.10	100.0	80-119%
Nitrogen, Nitrate + Nitrite	GN11301	T16445-18	mg/l	2.7	1.00	3.7	100.0	80-119%
Nitrogen, Nitrite	GN11290	T16445-5	mg/l	0.0030 U	0.100	0.096	96.0	75-134%
Nitrogen, Nitrite	GN11290	T16445-5	mg/l	0.0030 U	0.100	0.096	96.0	75-134%
Nitrogen, Nitrite	GN11300	T16445-18	mg/l	0.0030 U	0.100	0.094	94.0	75-134%
Sulfate	GN11356	T16445-5	mg/l	286	100	296	100.0	75-125%
Sulfate	GN11356	T16445-5	mg/l	286	xxxxxxxx		*	75-125%
Total Organic Carbon	GN11304	T16445-18	mg/l	6.0	10.0	16.0	100.0	74-121%
Total Organic Carbon	GN11311	T16445-5	mg/l	2.0	10.0	13.0	110.0	74-121%
Total Organic Carbon	GN11311	T16445-5	mg/l	2.0	10.0	12.0	100.0	74-121%
Total Organic Carbon	GN11317	T16445-8	mg/l	3.0	10.0	14.0	110.0	74-121%

Associated Samples:
Batch GN11290: T16445-1, T16445-10, T16445-11, T16445-12, T16445-13, T16445-14, T16445-2, T16445-3, T16445-4, T16445-5, T16445-6, T16445-7, T16445-8, T16445-9
Batch GN11291: T16445-1, T16445-10, T16445-11, T16445-12, T16445-13, T16445-14, T16445-2, T16445-3, T16445-4, T16445-5, T16445-6, T16445-7, T16445-8, T16445-9
Batch GN11300: T16445-18
Batch GN11301: T16445-18
Batch GN11304: T16445-18
Batch GN11311: T16445-1, T16445-2, T16445-3, T16445-4, T16445-5, T16445-6, T16445-7
Batch GN11317: T16445-10, T16445-11, T16445-12, T16445-13, T16445-14, T16445-8, T16445-9
Batch GN11343: T16445-1, T16445-10, T16445-11, T16445-12, T16445-13, T16445-14, T16445-18, T16445-2, T16445-3, T16445-4, T16445-5, T16445-6, T16445-7, T16445-8, T16445-9
Batch GN11356: T16445-1, T16445-10, T16445-11, T16445-12, T16445-13, T16445-14, T16445-18, T16445-2, T16445-3, T16445-4, T16445-5, T16445-6, T16445-7, T16445-8, T16445-9
Batch GN11375: T16445-1, T16445-10, T16445-11, T16445-12, T16445-13, T16445-14, T16445-18, T16445-2, T16445-3, T16445-4, T16445-5, T16445-6, T16445-7, T16445-8, T16445-9
(*) Outside of QC limits
(N) Matrix Spike Rec. outside of QC limits

Misc. Forms

Custody Documents and Other Forms

(Accutest Laboratories Southeast, Inc.)

Includes the following where applicable:

- Chain of Custody

ACCUTEST Laboratories T16445

CHAIN OF CUSTODY

00096406

Page 1 of 2

10165 Harwin, Suite 150 - Houston, TX 77036 - 713-271-4700 fax: 713-271-4770

FED-EX Tracking #	Bottle Order Control #
Accutest Quote #	Accutest Job # T16445

Subcontract Information	Project Information
Company Name: ALSE-ORLANDO	Send Report to: Agnesv@accutest.com
Project Contact	Bill to: Accutest Laboratories
Address	Address: 10165 Harwin Drive, Suite 150
City: ORLANDO State Zip	City: Houston, TX 77036 State Zip
Phone No. Fax No.	Phone No.: 713-271-4700 / 713-271-4770 Fax No.
	Accutest Purchase Order #

Requested Analyses

Matrix Codes: DW - Drinking Water; GW - Ground Water; WW - Wastewater; SO - Soil; SL - Sludge; OI - Oil; LIQ - Other Liquid; SOL - Other Solid

Accutest Sample ID	Collection Date	Collection Time	Matrix	# of bottles	HCl	HCl+Hexane	HNO3	H2SO4	ENCORE	NaHSO4	MEOH	NONE	Methane, Ethane, Ethene (RSK147)	Perchlorates	8330 Explosives	LAB USE ONLY
T16445-1	2/22/2007	930	GW	5	2							3	X	X	X	
T16445-2	2/22/2007	941	GW	3	2							1	X	X		
T16445-3	2/22/2007	1536	GW	3	2							1	X	X		
T16445-5 + MS/MSD	2/23/2007	1046	GW	9	6							3	X	X		
T16445-6	2/23/2007	1453	GW	3	2							1	X	X		
T16445-7	2/22/2007	1030	GW	5	2							3	X	X	X	
T16445-8	2/22/2007	1418	GW	5	2							3	X	X	X	
T16445-9	2/22/2007	1418	GW	3	2							1	X	X		
T16445-10	2/22/2007	1245	GW	5	2							3	X	X	X	
T16445-11	2/22/2007	1245	GW	5	2							3	X	X	X	FD. Only 1 -1L Amber

Turnaround Time (Business days)

- [XX] 10 Day *STANDARD*
- [ ] 5 Day *RUSH*
- [ ] 4 Day *RUSH*
- [ ] 3 Day *EMERGENCY*
- [ ] 2 Day *EMERGENCY*
- [ ] 1 Day *EMERGENCY*
- [ ] Other

Approved By:/ Date:

Data Deliverable Information

- [ ] Commercial "A"
- [ ] Commercial "B"
- [XX] TRRP 13
- [XX] Reduced Tier1
- [ ] State Forms
- [ ] EDD Format
- [ ] Other

Commercial "A" = Results Only

Commercial "B" = Results & Standard QC

Comments / Remarks

SAMPLE CUSTODY MUST BE DOCUMENTED BELOW EACH TIME SAMPLES CHANGE POSSESSION, INCLUDING COURIER DELIVERY

Relinquished by Sampler:	Date Time:	Received By:	Relinquished By:	Date Time:	Received By:
1		1	2 [signature]		2
Relinquished by: 3	Date Time:	Received By: 3	Relinquished By: 4 [signature]	Date Time: 2/27/07 17:02	Received By: 4 FX
Relinquished by: 5 FX	Date Time: 09:30 02-28-07	Received By: 5 Wifred Vyas	Custody Seal #	Preserved where applicable ☐	On Ice ☐ Cooler Temp.

2.0 2.1 1.8 3.0

7.1

7

T16445: Chain of Custody

Page 1 of 3

Accutest Laboratories Southeast, Inc.

ACCUTEST Laboratories

CHAIN OF CUSTODY

00096407

T16445

Page 2 of 2

10165 Harwin, Suite 150 - Houston, TX 77036 - 713-271-4700 fax: 713-271-4770

FED-EX Tracking #	Bottle Order Control #
Accutest Quote #	Accutest Job # T16445

Subcontract Information

Company Name: ALSE-ORLANDO
Project Contact:
Address:
City: ORLANDO State: Zip:
Phone No.: Fax No.:

Project Information

Send Report to: Agnesv@accutest.com
Bill to: Accutest Laboratories
Address: 10165 Harwin Drive, Suite 150
City: Houston, TX 77036 State: Zip:
Phone No.: 713-271-4700 / 713-271-4770 Fax No.:
Accutest Purchase Order #:

Requested Analyses

Matrix Codes: DW - Drinking Water; GW - Ground Water; WW - Wastewater; SO - Soil; SL - Sludge; OI - Oil; LIQ - Other Liquid; SOL - Other Solid

Accutest Sample ID	Collection Date	Collection Time	Matrix	# of bottles	HCl	HNO3	H2SO4	ENCORE	NaHSO4	MEOH	NONE	Methane, Ethane, Ethene (RSK147)	Perchlorates	8330 Explosives	LAB USE ONLY
T16445-12	2/22/2007	1500	GW	5	2						3	X	X	X	
T16445-13	2/23/2007	1533	GW	5	2						3	X	X	X	
T16445-14	2/23/2007	1630	GW	5	2						2	X	X	X	Only 1-1L Amber
T16445-18	2/23/2007	1047	GW	5	2						3	X	X	X	
T16445-4	2/22/2007	1536	GW	3	2						1	X	X		

Turnaround Time (Business days)

- [XX] 10 Day STANDARD
- [ ] 5 Day RUSH
- [ ] 4 Day RUSH
- [ ] 3 Day EMERGENCY
- [ ] 2 Day EMERGENCY
- [ ] 1 Day EMERGENCY
- [ ] Other

Approved By:/ Date:

Data Deliverable Information

- [ ] Commercial "A"
- [ ] Commercial "B"
- [XX] TRRP 13
- [XX] Reduced Tier1
- [ ] State Forms
- [ ] EDD Format
- [ ] Other

Commercial "A" = Results Only
Commercial "B" = Results & Standard QC

Comments / Remarks

SAMPLE CUSTODY MUST BE DOCUMENTED BELOW EACH TIME SAMPLES CHANGE POSSESSION, INCLUDING COURIER DELIVERY

Relinquished by Sampler:	Date Time:	Received By:	Relinquished By:	Date Time:	Received By:
1		1	2		2
Relinquished by: 3	Date Time:	Received By: 3	Relinquished By: 4	Date Time: 2/27/07 17:00	Received By: 4 FX
Relinquished by: 5 FX	Date Time: 02-28-07 24:30	Received By: 5	Custody Seal #	Preserved where applicable ☐	On Ice ☐ Cooler Temp.

2.0.2.4.1.8 2.0

7.1

7

T16445: Chain of Custody
Page 2 of 3

00096408

ACCUTEST LABORATORIES SAMPLE RECEIPT CONFIRMATION

ACCUTEST'S JOB NUMBER: T16445 CLIENT: ALBC PROJECT: T16445

DATE/TIME RECEIVED: 02-28-07 09:30 # OF COOLERS RECEIVED: 4 COOLER TEMPS: 2.0, 2.4, 1.8, 3.0

METHOD OF DELIVERY: (FEDEX) UPS ACCUTEST COURIER GREYHOUND DELIVERY OTHER

AIRBILL NUMBERS: 7986 1726 3879

COOLER INFORMATION

- [ ] CUSTODY SEAL NOT PRESENT OR NOT INTACT
- [ ] CHAIN OF CUSTODY NOT RECEIVED (COC)
- [ ] ANALYSIS REQUESTED IS UNCLEAR OR MISSING
- [ ] SAMPLE DATES OR TIMES UNCLEAR OR MISSING
- [ ] TEMPERATURE CRITERIA NOT MET

TRIP BLANK INFORMATION

- [ ] TRIP BLANK PROVIDED
- [X] TRIP BLANK NOT PROVIDED
- [X] TRIP BLANK NOT ON COC
- [ ] TRIP BLANK INTACT
- [ ] TRIP BLANK NOT INTACT
- [ ] RECEIVED WATER TRIP BLANK
- [ ] RECEIVED SOIL TRIP BLANK

SAMPLE INFORMATION

- [ ] SAMPLE LABELS NOT PRESENT ON ALL BOTTLES
- [ ] CORRECT NUMBER OF CONTAINERS USED
- [ ] SAMPLE RECEIVED IMPROPERLY PRESERVED
- [ ] INSUFFICIENT VOLUME FOR ANALYSIS
- [ ] TIMES ON COC DOES NOT MATCH LABEL(S)
- [ ] ID'S ON COC DOES NOT MATCH LABEL(S)
- [ ] VOC VIALS HAVE HEADSPACE (MACRO BUBBLES)
- [ ] BOTTLES RECEIVED BUT ANALYSIS NOT REQUESTED
- [ ] NO BOTTLES RECEIVED FOR ANALYSIS REQUESTED
- [ ] UNCLEAR FILTERING INSTRUCTIONS
- [ ] UNCLEAR COMPOSITING INSTRUCTIONS
- [ ] SAMPLE CONTAINER(S) RECEIVED BROKEN
- [ ] % SOLIDS JAR NOT RECEIVED
- [ ] 5035 FIELD KIT NOT FROZEN WITHIN 48 HOUR'S
- [ ] RESIDUAL CHLORINE PRESENT

(APPLICABLE TO EPA 600 SERIES OR NORTH CAROLINA ORGANICS)

MISC. INFORMATION

NUMBER OF ENCORES ? Ø

NUMBER OF 5035 FIELD KITS ? Ø

NUMBER OR LAB FILTERED METALS ? Ø

SUMMARY OF COMMENTS:

TECHNICIAN SIGNATURE/DATE: 02-28-07 TECHNICIAN SIGNATURE/DATE: 2-28-07 ASBD 10/03/06

7.1

7

T16445: Chain of Custody

Page 3 of 3

GC Volatiles

QC Data Summaries

(Accutest Laboratories Southeast, Inc.)

Includes the following where applicable:

- Method Blank Summaries
- Blank Spike Summaries
- Matrix Spike and Duplicate Summaries
- Surrogate Recovery Summaries
- GC Surrogate Retention Time Summaries
- Initial and Continuing Calibration Summaries

Method Blank Summary

Job Number: T16445
Account: ALGC Accutest Laboratories Gulf Coast, Inc.
Project: ITTXHO: Longhorn Army Ammunition Plant

Sample	File ID	DF	Analyzed	By	Prep Date	Prep Batch	Analytical Batch
GXY992-MB	XY025253.D	1	03/01/07	TD	n/a	n/a	GXY992

The QC reported here applies to the following samples: **Method:** RSKSOP-147/175

T16445-1, T16445-2, T16445-3, T16445-4, T16445-5, T16445-6, T16445-7, T16445-8, T16445-9, T16445-10, T16445-11, T16445-12, T16445-13, T16445-14, T16445-18

CAS No.	Compound	Result	RL	MDL	Units	Q
74-82-8	Methane	ND	0.50	0.30	ug/l	
74-84-0	Ethane	ND	1.0	0.60	ug/l	
74-85-1	Ethene	ND	1.0	0.80	ug/l	

Blank Spike Summary

Job Number: T16445
Account: ALGC Accutest Laboratories Gulf Coast, Inc.
Project: ITTXHO: Longhorn Army Ammunition Plant

Sample	File ID	DF	Analyzed	By	Prep Date	Prep Batch	Analytical Batch
GXY992-BS	XY025254.D	1	03/01/07	TD	n/a	n/a	GXY992

The QC reported here applies to the following samples: **Method:** RSKSOP-147/175

T16445-1, T16445-2, T16445-3, T16445-4, T16445-5, T16445-6, T16445-7, T16445-8, T16445-9, T16445-10, T16445-11, T16445-12, T16445-13, T16445-14, T16445-18

CAS No.	Compound	Spike ug/l	BSP ug/l	BSP %	Limits
74-82-8	Methane	108	123	114	54-149
74-84-0	Ethane	219	245	112	57-143
74-85-1	Ethene	290	319	110	57-143

Matrix Spike Summary

Job Number: T16445
Account: ALGC Accutest Laboratories Gulf Coast, Inc.
Project: ITTXHO: Longhorn Army Ammunition Plant

Sample	File ID	DF	Analyzed	By	Prep Date	Prep Batch	Analytical Batch
T16445-5MS	XY025273.D	1	03/01/07	TD	n/a	n/a	GXY992
T16445-5	XY025259.D	1	03/01/07	TD	n/a	n/a	GXY992

The QC reported here applies to the following samples: **Method:** RSKSOP-147/175

T16445-1, T16445-2, T16445-3, T16445-4, T16445-5, T16445-6, T16445-7, T16445-8, T16445-9, T16445-10, T16445-11, T16445-12, T16445-13, T16445-14, T16445-18

CAS No.	Compound	T16445-5 ug/l	Q	Spike ug/l	MS ug/l	MS %	Limits
74-82-8	Methane	2.93		108	144	131	54-149
74-84-0	Ethane	1.0 U		219	286	131	57-143
74-85-1	Ethene	1.0 U		290	371	128	57-143

Duplicate Summary

Job Number: T16445
Account: ALGC Accutest Laboratories Gulf Coast, Inc.
Project: ITTXHO: Longhorn Army Ammunition Plant

Sample	File ID	DF	Analyzed	By	Prep Date	Prep Batch	Analytical Batch
T16445-5DUP	XY025272.D	1	03/01/07	TD	n/a	n/a	GXY992
T16445-5	XY025259.D	1	03/01/07	TD	n/a	n/a	GXY992

The QC reported here applies to the following samples: **Method:** RSKSOP-147/175

T16445-1, T16445-2, T16445-3, T16445-4, T16445-5, T16445-6, T16445-7, T16445-8, T16445-9, T16445-10, T16445-11, T16445-12, T16445-13, T16445-14, T16445-18

CAS No.	Compound	T16445-5 ug/l	Q	DUP ug/l	Q	RPD	Limits
74-82-8	Methane	2.93		3.38		14	24
74-84-0	Ethane	1.0 U		ND		nc	23
74-85-1	Ethene	1.0 U		ND		nc	10

Initial Calibration Summary

Job Number: T16445
Account: ALGC Accutest Laboratories Gulf Coast, Inc.
Project: ITTXHO: Longhorn Army Ammunition Plant

Sample: GXY989-ICC989
Lab FileID: XY025202.D

Response Factor Report VOA5

Method : C:\HPCHEM\2\METHODS\RSK147XY.M (Chemstation Integrator)
Title : Dissolved Gases in Water
Last Update : Thu Feb 22 15:36:18 2007
Response via : Initial Calibration

Calibration Files
1 =XY025194.D 2 =XY025195.D 3 =XY025201.D 4 =XY025197.D
5 =XY025202.D 6 =XY025199.D 7 =XY025200.D

Compound	1	2	3	4	5	6	7	Avg	%RSD
1)c Methane	1.442	0.904	1.128	1.220	0.672	0.793	0.957	1.017 E4	26.02
2)c Ethylene	2.415	1.896	1.964	2.128	1.306	1.522	1.817	1.864 E4	19.76
3)c Ethane	2.311	1.873	1.880	2.068	1.280	1.499	1.798	1.816 E4	18.87

(#) = Out of Range

RSK147XY.M Thu Feb 22 15:38:10 2007

Initial Calibration Verification

Job Number: T16445
Account: ALGC Accutest Laboratories Gulf Coast, Inc.
Project: ITTXHO: Longhorn Army Ammunition Plant

Sample: GXY989-ICV989
Lab FileID: XY025203.D

Evaluate Continuing Calibration Report

Data File : C:\HPCHEM\2\DATA\022207\XY025203.D Vial: 100
Acq On : 22 Feb 2007 1:27 pm Operator: Trangd
Sample : ICV989-1000 Inst : VOA5
Misc : gc7062,gxy989,,,,, Multiplr: 1.00
IntFile : EVENTS.E

Method : C:\HPCHEM\2\METHODS\RSK147XY.M (Chemstation Integrator)
Title : Dissolved Gases in Water
Last Update : Thu Feb 22 15:36:18 2007
Response via : Multiple Level Calibration

Min. RRF : 0.000 Min. Rel. Area : 50% Max. R.T. Dev 0.50min
Max. RRF Dev : 30% Max. Rel. Area : 150%

	Compound	Amount	Calc.	%Drift	Area%	Dev(min)	RT Window
1 c	Methane	1000.000	1154.410	-15.4	175	0.20	0.88- 1.48
2 c	Ethylene	1000.000	1202.152	-20.2	172	0.31	2.54- 3.34
3 c	Ethane	1000.000	1245.774	-24.6	177	0.32	3.14- 3.94

(#) = Out of Range SPCC's out = 0 CCC's out = 0
XY025202.D RSK147XY.M Thu Feb 22 15:37:53 2007

Continuing Calibration Summary

Job Number: T16445
Account: ALGC Accutest Laboratories Gulf Coast, Inc.
Project: ITTXHO: Longhorn Army Ammunition Plant

Sample: GXY992-CC989
Lab FileID: XY025251.D

Evaluate Continuing Calibration Report

Data File : C:\HPCHEM\2\DATA\030107\XY025251.D Vial: 100
Acq On : 1 Mar 2007 9:53 am Operator: Trangd
Sample : CC989-1000 Inst : VOA5
Misc : gc7109,gxy992,,,,, Multiplr: 1.00
IntFile : EVENTS.E

Method : C:\HPCHEM\2\METHODS\RSK147XY.M (Chemstation Integrator)
Title : Dissolved Gases in Water
Last Update : Fri Mar 02 09:28:32 2007
Response via : Multiple Level Calibration

Min. RRF : 0.000 Min. Rel. Area : 50% Max. R.T. Dev 0.50min
Max. RRF Dev : 30% Max. Rel. Area : 150%

	Compound	Amount	Calc.	%Drift	Area%	Dev(min)	RT Window
1 c	Methane	1000.000	1006.127	-0.6	152	-0.11	1.16- 1.76
2 c	Ethylene	1000.000	1069.950	-7.0	153	-0.09	2.96- 3.76
3 c	Ethane	1000.000	1082.186	-8.2	153	-0.08	3.58- 4.38

(#) = Out of Range SPCC's out = 0 CCC's out = 0
XY025202.D RSK147XY.M Fri Mar 02 10:53:27 2007

8.5

Continuing Calibration Summary

Job Number: T16445
Account: ALGC Accutest Laboratories Gulf Coast, Inc.
Project: ITTXHO: Longhorn Army Ammunition Plant

Sample: GXY992-CC989
Lab FileID: XY025262.D

Evaluate Continuing Calibration Report

Data File : C:\HPCHEM\2\DATA\030107\XY025262.D Vial: 100
Acq On : 1 Mar 2007 1:50 pm Operator: Trangd
Sample : CC989-500 Inst : VOA5
Misc : gc7128,gxy992,,,,, Multiplr: 1.00
IntFile : EVENTS.E

Method : C:\HPCHEM\2\METHODS\RSK147XY.M (Chemstation Integrator)
Title : Dissolved Gases in Water
Last Update : Fri Mar 02 09:28:32 2007
Response via : Multiple Level Calibration

Min. RRF : 0.000 Min. Rel. Area : 50% Max. R.T. Dev 0.50min
Max. RRF Dev : 30% Max. Rel. Area : 150%

	Compound	Amount	Calc.	%Drift	Area%	Dev(min)	RT Window
1 c	Methane	500.000	411.874	17.6	69	0.09	1.16- 1.76
2 c	Ethylene	500.000	450.472	9.9	79	0.14	2.96- 3.76
3 c	Ethane	500.000	453.565	9.3	80	0.15	3.58- 4.38

(#) = Out of Range SPCC's out = 0 CCC's out = 0
XY025197.D RSK147XY.M Fri Mar 02 09:55:28 2007

8.5
8

Continuing Calibration Summary

Job Number: T16445
Account: ALGC Accutest Laboratories Gulf Coast, Inc.
Project: ITTXHO: Longhorn Army Ammunition Plant

Sample: GXY992-ECC989
Lab FileID: XY025274.D

Evaluate Continuing Calibration Report

Data File : C:\HPCHEM\2\DATA\030107\XY025274.D Vial: 100
Acq On : 1 Mar 2007 4:48 pm Operator: Trangd
Sample : ECC989-1000 Inst : VOA5
Misc : gc7128,gxy992,,,,, Multiplr: 1.00
IntFile : EVENTS.E

Method : C:\HPCHEM\2\METHODS\RSK147XY.M (Chemstation Integrator)
Title : Dissolved Gases in Water
Last Update : Fri Mar 02 09:28:32 2007
Response via : Multiple Level Calibration

Min. RRF : 0.000 Min. Rel. Area : 50% Max. R.T. Dev 0.50min
Max. RRF Dev : 30% Max. Rel. Area : 150%

	Compound	Amount	Calc.	%Drift	Area%	Dev(min)	RT Window
1 c	Methane	1000.000	1171.434	-17.1	177	0.00	1.16- 1.76
2 c	Ethylene	1000.000	1277.743	-27.8	182	0.00	2.96- 3.76
3 c	Ethane	1000.000	1297.361	-29.7	184	0.00	3.58- 4.38

(#) = Out of Range SPCC's out = 0 CCC's out = 0
XY025202.D RSK147XY.M Fri Mar 02 09:55:08 2007

8.5

GC Semi-volatiles

QC Data Summaries

(Accutest Laboratories Southeast, Inc.)

Includes the following where applicable:

- Method Blank Summaries
- Blank Spike Summaries
- Matrix Spike and Duplicate Summaries
- Surrogate Recovery Summaries
- GC Surrogate Retention Time Summaries
- Initial and Continuing Calibration Summaries

Method Blank Summary

Job Number: T16445
Account: ALGC Accutest Laboratories Gulf Coast, Inc.
Project: ITTXHO: Longhorn Army Ammunition Plant

Sample	File ID	DF	Analyzed	By	Prep Date	Prep Batch	Analytical Batch
OP19677-MB	GG020203.D	1	03/02/07	MRE	03/01/07	OP19677	GGG906

The QC reported here applies to the following samples: **Method:** SW846 8330A

T16445-1, T16445-7, T16445-8, T16445-10, T16445-11, T16445-12, T16445-13, T16445-14, T16445-18

CAS No.	Compound	Result	RL	MDL	Units	Q
2691-41-0	HMX	ND	0.20	0.060	ug/l	
121-82-4	RDX	ND	0.20	0.075	ug/l	
99-65-0	1,3-Dinitrobenzene	ND	0.20	0.070	ug/l	
606-20-2	2,6-Dinitrotoluene	ND	0.20	0.065	ug/l	
121-14-2	2,4-Dinitrotoluene	ND	0.20	0.075	ug/l	
35572-78-2	2-amino-4,6-Dinitrotoluene	ND	0.20	0.070	ug/l	
19406-51-0	4-amino-2,6-Dinitrotoluene	ND	0.20	0.080	ug/l	
98-95-3	Nitrobenzene	ND	0.20	0.060	ug/l	
88-72-2	o-Nitrotoluene	ND	0.20	0.060	ug/l	
99-08-1	m-Nitrotoluene	ND	0.20	0.075	ug/l	
99-99-0	p-Nitrotoluene	ND	0.20	0.075	ug/l	
479-45-8	Tetryl	ND	0.20	0.075	ug/l	
99-35-4	1,3,5-Trinitrobenzene	ND	0.20	0.095	ug/l	
118-96-7	2,4,6-Trinitrotoluene	ND	0.20	0.080	ug/l	

CAS No.	Surrogate Recoveries		Limits
610-39-9	3,4-Dinitrotoluene	102%	70-136%

Method Blank Summary

Job Number: T16445
Account: ALGC Accutest Laboratories Gulf Coast, Inc.
Project: ITTXHO: Longhorn Army Ammunition Plant

Sample	File ID	DF	Analyzed	By	Prep Date	Prep Batch	Analytical Batch
OP19677-MB	GG020233.D	1	03/05/07	MRE	03/01/07	OP19677	GGG907

The QC reported here applies to the following samples: **Method:** SW846 8330A

T16445-1, T16445-7, T16445-8, T16445-10, T16445-11, T16445-12, T16445-13, T16445-14, T16445-18

CAS No.	Compound	Result	RL	MDL	Units	Q
2691-41-0	HMX	ND	0.20	0.060	ug/l	
121-82-4	RDX	ND	0.20	0.075	ug/l	
99-65-0	1,3-Dinitrobenzene	ND	0.20	0.070	ug/l	
606-20-2	2,6-Dinitrotoluene	ND	0.20	0.065	ug/l	
121-14-2	2,4-Dinitrotoluene	ND	0.20	0.075	ug/l	
35572-78-2	2-amino-4,6-Dinitrotoluene	ND	0.20	0.070	ug/l	
19406-51-0	4-amino-2,6-Dinitrotoluene	ND	0.20	0.080	ug/l	
98-95-3	Nitrobenzene	ND	0.20	0.060	ug/l	
88-72-2	o-Nitrotoluene	ND	0.20	0.060	ug/l	
99-08-1	m-Nitrotoluene	ND	0.20	0.075	ug/l	
99-99-0	p-Nitrotoluene	ND	0.20	0.075	ug/l	
479-45-8	Tetryl	ND	0.20	0.075	ug/l	
99-35-4	1,3,5-Trinitrobenzene	ND	0.20	0.095	ug/l	
118-96-7	2,4,6-Trinitrotoluene	ND	0.20	0.080	ug/l	

CAS No.	Surrogate Recoveries		Limits
610-39-9	3,4-Dinitrotoluene	80%	70-136%

Blank Spike Summary

Job Number: T16445
Account: ALGC Accutest Laboratories Gulf Coast, Inc.
Project: ITTXHO: Longhorn Army Ammunition Plant

Sample	File ID	DF	Analyzed	By	Prep Date	Prep Batch	Analytical Batch
OP19677-BS	GG020202.D	1	03/02/07	MRE	03/01/07	OP19677	GGG906

The QC reported here applies to the following samples: **Method:** SW846 8330A

T16445-1, T16445-7, T16445-8, T16445-10, T16445-11, T16445-12, T16445-13, T16445-14, T16445-18

CAS No.	Compound	Spike ug/l	BSP ug/l	BSP %	Limits
2691-41-0	HMX	5	5.3	106	74-152
121-82-4	RDX	5	5.4	108	80-124
99-65-0	1,3-Dinitrobenzene	5	5.3	106	84-123
606-20-2	2,6-Dinitrotoluene	5	5.3	106	84-133
121-14-2	2,4-Dinitrotoluene	5	5.1	102	77-116
35572-78-2	2-amino-4,6-Dinitrotoluene	5	5.2	104	78-117
19406-51-0	4-amino-2,6-Dinitrotoluene	5	5.1	102	84-123
98-95-3	Nitrobenzene	5	5.5	110	76-128
88-72-2	o-Nitrotoluene	5	5.0	100	76-120
99-08-1	m-Nitrotoluene	5	5.2	104	74-124
99-99-0	p-Nitrotoluene	5	5.3	106	81-125
479-45-8	Tetryl	5	4.6	92	62-117
99-35-4	1,3,5-Trinitrobenzene	5	5.3	106	85-127
118-96-7	2,4,6-Trinitrotoluene	5	5.3	106	71-128

CAS No.	Surrogate Recoveries	BSP	Limits
610-39-9	3,4-Dinitrotoluene	124%	70-136%

Blank Spike Summary

Job Number: T16445
Account: ALGC Accutest Laboratories Gulf Coast, Inc.
Project: ITTXHO: Longhorn Army Ammunition Plant

Sample	File ID	DF	Analyzed	By	Prep Date	Prep Batch	Analytical Batch
OP19677-BS	GG020232.D	1	03/05/07	MRE	03/01/07	OP19677	GGG907

The QC reported here applies to the following samples: **Method:** SW846 8330A

T16445-1, T16445-7, T16445-8, T16445-10, T16445-11, T16445-12, T16445-13, T16445-14, T16445-18

CAS No.	Compound	Spike ug/l	BSP ug/l	BSP %	Limits
2691-41-0	HMX	5	5.9	118	74-152
121-82-4	RDX	5	5.5	110	80-124
99-65-0	1,3-Dinitrobenzene	5	5.3	106	84-123
606-20-2	2,6-Dinitrotoluene	5	5.1	102	84-133
121-14-2	2,4-Dinitrotoluene	5	5.1	102	77-116
35572-78-2	2-amino-4,6-Dinitrotoluene	5	5.2	104	78-117
19406-51-0	4-amino-2,6-Dinitrotoluene	5	5.1	102	84-123
98-95-3	Nitrobenzene	5	6.4	128	76-128
88-72-2	o-Nitrotoluene	5	5.0	100	76-120
99-08-1	m-Nitrotoluene	5	5.3	106	74-124
99-99-0	p-Nitrotoluene	5	5.3	106	81-125
479-45-8	Tetryl	5	4.6	92	62-117
99-35-4	1,3,5-Trinitrobenzene	5	5.5	110	85-127
118-96-7	2,4,6-Trinitrotoluene	5	5.7	114	71-128

CAS No.	Surrogate Recoveries	BSP	Limits
610-39-9	3,4-Dinitrotoluene	100%	70-136%

Matrix Spike/Matrix Spike Duplicate Summary

Job Number: T16445
Account: ALGC Accutest Laboratories Gulf Coast, Inc.
Project: ITTXHO: Longhorn Army Ammunition Plant

Sample	File ID	DF	Analyzed	By	Prep Date	Prep Batch	Analytical Batch
OP19677-MS	GG020207.D	1	03/02/07	MRE	03/01/07	OP19677	GGG906
OP19677-MSD	GG020208.D	1	03/02/07	MRE	03/01/07	OP19677	GGG906
F47539-3	GG020206.D	1	03/02/07	MRE	03/01/07	OP19677	GGG906

The QC reported here applies to the following samples: **Method:** SW846 8330A

T16445-1, T16445-7, T16445-8, T16445-10, T16445-11, T16445-12, T16445-13, T16445-14, T16445-18

CAS No.	Compound	F47539-3 ug/l	Q	Spike ug/l	MS ug/l	MS %	MSD ug/l	MSD %	RPD	Limits Rec/RPD
2691-41-0	HMX	ND		10	11.0	110	11.8	118	7	74-152/21
121-82-4	RDX	ND		10	10.3	103	10.7	107	4	80-124/20
99-65-0	1,3-Dinitrobenzene	ND		10	10.3	103	10.9	109	6	84-123/23
606-20-2	2,6-Dinitrotoluene	ND		10	9.9	99	10.6	106	7	84-133/23
121-14-2	2,4-Dinitrotoluene	ND		10	9.7	97	10.3	103	6	77-116/26
35572-78-2	2-amino-4,6-Dinitrotoluene	ND		10	9.4	94	10.5	105	11	78-117/28
19406-51-0	4-amino-2,6-Dinitrotoluene	ND		10	9.1	91	10.2	102	11	84-123/27
98-95-3	Nitrobenzene	ND		10	10.5	105	11.1	111	6	76-128/28
88-72-2	o-Nitrotoluene	ND		10	9.3	93	10.2	102	9	76-120/30
99-08-1	m-Nitrotoluene	ND		10	9.5	95	10.6	106	11	74-124/32
99-99-0	p-Nitrotoluene	ND		10	9.7	97	10.7	107	10	81-125/34
479-45-8	Tetryl	ND		10	7.4	74	7.9	79	7	62-117/28
99-35-4	1,3,5-Trinitrobenzene	ND		10	9.8	98	10.4	104	6	85-127/21
118-96-7	2,4,6-Trinitrotoluene	ND		10	9.8	98	10.4	104	6	71-128/21

CAS No.	Surrogate Recoveries	MS	MSD	F47539-3	Limits
610-39-9	3,4-Dinitrotoluene	94%	98%	102%	70-136%

Semivolatile Surrogate Recovery Summary

Job Number: T16445
Account: ALGC Accutest Laboratories Gulf Coast, Inc.
Project: ITTXHO: Longhorn Army Ammunition Plant

Method: SW846 8330A **Matrix:** AQ

Samples and QC shown here apply to the above method

Lab Sample ID	Lab File ID	S1 [a]
T16445-1	GG020214.D	82.0
T16445-7	GG020215.D	109.0
T16445-8	GG020216.D	107.0
T16445-10	GG020217.D	98.0
T16445-11	GG020218.D	117.0
T16445-12	GG020236.D	90.0
T16445-12	GG020219.D	103.0
T16445-13	GG020220.D	107.0
T16445-14	GG020221.D	102.0
T16445-18	GG020222.D	106.0
OP19677-BS	GG020202.D	124.0
OP19677-BS	GG020232.D	100.0
OP19677-MB	GG020203.D	102.0
OP19677-MB	GG020233.D	80.0
OP19677-MS	GG020207.D	94.0
OP19677-MSD	GG020208.D	98.0

Surrogate Compounds	Recovery Limits
S1 = 3,4-Dinitrotoluene	70-136%

(a) Recovery from GC signal #1

GC Surrogate Retention Time Summary

Job Number: T16445
Account: ALGC Accutest Laboratories Gulf Coast, Inc.
Project: ITTXHO: Longhorn Army Ammunition Plant

Check Std:	GGG906-CC825	**Injection Date:**	03/02/07
Lab File ID:	GG020201.D	**Injection Time:**	16:17
Instrument ID:	GCGG	**Method:**	SW846 8330A

	S1 [a] **RT**
Check Std	13.50

Lab Sample ID	**Lab File ID**	**Date Analyzed**	**Time Analyzed**	**S1** [a] **RT**
OP19677-BS	GG020202.D	03/02/07	16:45	13.49
OP19677-MB	GG020203.D	03/02/07	17:12	13.50
ZZZZZZ	GG020204.D	03/02/07	17:27	13.50
ZZZZZZ	GG020205.D	03/02/07	17:54	13.50
F47539-3	GG020206.D	03/02/07	18:22	13.49
OP19677-MS	GG020207.D	03/02/07	18:50	13.47
OP19677-MSD	GG020208.D	03/02/07	19:17	13.46
ZZZZZZ	GG020209.D	03/02/07	19:45	13.47
ZZZZZZ	GG020210.D	03/02/07	20:12	13.44
ZZZZZZ	GG020211.D	03/02/07	20:40	13.43

Surrogate Compounds

S1 = 3,4-Dinitrotoluene

(a) Retention time from GC signal #1

GC Surrogate Retention Time Summary

Job Number: T16445
Account: ALGC Accutest Laboratories Gulf Coast, Inc.
Project: ITTXHO: Longhorn Army Ammunition Plant

Check Std:	GGG906-CC825	**Injection Date:**	03/02/07
Lab File ID:	GG020212.D	**Injection Time:**	21:07
Instrument ID:	GCGG	**Method:**	SW846 8330A

	S1 [a] **RT**
Check Std	13.45

Lab Sample ID	**Lab File ID**	**Date Analyzed**	**Time Analyzed**	**S1** [a] **RT**
T16445-1	GG020214.D	03/02/07	22:03	13.44
T16445-7	GG020215.D	03/02/07	22:30	13.42
T16445-8	GG020216.D	03/02/07	22:58	13.43
T16445-10	GG020217.D	03/02/07	23:25	13.43
T16445-11	GG020218.D	03/02/07	23:53	13.43
T16445-12	GG020219.D	03/03/07	00:20	13.40
T16445-13	GG020220.D	03/03/07	00:48	13.42
T16445-14	GG020221.D	03/03/07	01:16	13.43
T16445-18	GG020222.D	03/03/07	01:43	13.41
ZZZZZZ	GG020223.D	03/03/07	02:11	13.42

Surrogate Compounds

S1 = 3,4-Dinitrotoluene

(a) Retention time from GC signal #1

GC Surrogate Retention Time Summary

Job Number: T16445
Account: ALGC Accutest Laboratories Gulf Coast, Inc.
Project: ITTXHO: Longhorn Army Ammunition Plant

Check Std:	GGG907-CC827	**Injection Date:**	03/05/07
Lab File ID:	GG020231.D	**Injection Time:**	13:23
Instrument ID:	GCGG	**Method:**	SW846 8330A

	S1 [a] RT	S1 [b] RT
Check Std	10.72	10.72

Lab Sample ID	Lab File ID	Date Analyzed	Time Analyzed	S1 [a] RT	S1 [b] RT
OP19677-BS	GG020232.D	03/05/07	13:43	10.72	
OP19677-MB	GG020233.D	03/05/07	14:02	10.72	
ZZZZZZ	GG020234.D	03/05/07	14:22	10.72	
T16445-12	GG020236.D	03/05/07	15:01	10.71	
GGG907-ECC827	GG020238.D	03/05/07	15:40	10.72	10.72

Surrogate Compounds

S1 = 3,4-Dinitrotoluene

(a) Retention time from GC signal #1
(b) Retention time from GC signal #2

Initial Calibration Summary

Job Number: T16445
Account: ALGC Accutest Laboratories Gulf Coast, Inc.
Project: ITTXHO: Longhorn Army Ammunition Plant

Sample: GGG825-ICC825
Lab FileID: GG018282.D

Response Factor Report G1315B

Method : C:\HPCHEM\1\METHODS\8330_EX.M (Chemstation Integrator)
Title : Explosives by 8330
Last Update : Thu Oct 19 11:32:41 2006
Response via : Initial Calibration

Calibration Files
20 =GG018279.D 100 =GG018280.D 250 =GG018281.D 500 =GG018282.D
750 =GG018283.D 1000=GG018284.D 2000=GG018285.D ICV =GG018286.D

Compound	20	100	250	500	750	1000	2000	ICV	Avg	%RSD
1) HMX	2.870	2.789	2.757	2.694	2.719	2.735	2.786		2.764 E3	2.09
2) TNX	5.916	6.424	6.486	6.331	6.453	6.468	6.587		6.381 E3	3.43
3) DNX	4.900	5.156	5.125	4.986	5.037	5.057	5.155		5.059 E3	1.88
4) MNX	4.909	4.991	4.972	4.807	4.886	4.901	4.995		4.923 E3	1.38
5) RDX	3.185	3.565	3.625	3.500	3.554	3.547	3.609		3.512 E3	4.27
6) 1,3,5-Trinit	7.763	7.813	7.689	7.436	7.595	7.612	7.763		7.667 E3	1.70
7) 1,3-Dinitrob	1.069	1.070	1.060	1.029	1.047	1.051	1.071		1.057 E4	1.49
8) Tetryl	6.130	6.168	6.180	6.004	6.091	6.096	6.221		6.127 E3	1.17
9) Nitrobenzene	7.057	7.032	7.019	6.708	6.915	6.920	7.082		6.962 E3	1.85
10) 3,4-Dinitrot	4.667	4.752	4.687	4.537	4.621	4.631	4.731		4.661 E3	1.56
11) 2,4,6-Trinit	7.275	7.409	7.373	7.143	7.282	7.301	7.456		7.320 E3	1.42
12) 4-Amino-2,6-	5.266	5.304	5.264	5.117	5.194	5.220	5.330		5.242 E3	1.37
13) 2-Amino-4,6-	7.249	7.203	7.187	7.006	7.130	7.155	7.311		7.177 E3	1.35
14) 2,6-Dinitrot	5.524	5.133	5.010	4.844	4.942	4.954	5.071		5.068 E3	4.37
15) 2,4-Dinitrot	1.149	1.009	0.992	0.958	0.976	0.978	0.999		1.009 E4	6.36
16) o-Nitrotolue	5.044	4.558	4.542	4.244	4.403	4.414	4.516		4.532 E3	5.53
17) p-Nitrotolue	4.102	3.815	3.790	3.596	3.734	3.734	3.831		3.800 E3	4.06
18) m-Nitrotolue	4.959	4.808	4.856	4.629	4.803	4.812	4.942		4.830 E3	2.26

Signal #2

1) HMX	8.151	8.148	8.190	8.012	8.090	8.092	8.238		8.132 E3	0.91
2) TNX	0.956	0.980	0.995	0.969	0.984	0.985	1.001		0.981 E4	1.55
3) DNX	7.525	8.044	8.332	7.974	7.996	7.991	8.136		8.000 E3	3.05
4) MNX	7.756	7.781	7.940	7.696	7.742	7.746	7.895		7.794 E3	1.14
5) RDX	4.720	5.727	5.947	5.855	5.997	5.944	6.042		5.748 E3	8.08
6) 1,3,5-Trinit	1.479	1.619	1.553	1.513	1.538	1.540	1.572		1.545 E4	2.85
7) 1,3-Dinitrob	1.225	1.286	1.279	1.246	1.265	1.272	1.295		1.267 E4	1.91
8) Tetryl	1.037	1.106	1.123	1.092	1.106	1.105	1.129		1.100 E4	2.76
9) Nitrobenzene	3.263	3.394	3.343	3.176	3.205	3.190	3.274		3.264 E3	2.50
10) 3,4-Dinitrot	6.324	6.522	6.468	6.218	6.242	6.243	6.394		6.344 E3	1.89
11) 2,4,6-Trinit	1.070	1.106	1.085	1.048	1.060	1.064	1.089		1.075 E4	1.85
12) 4-Amino-2,6-	1.430	1.457	1.434	1.391	1.407	1.413	1.444		1.425 E4	1.62
13) 2-Amino-4,6-	1.240	1.240	1.201	1.171	1.189	1.194	1.223		1.208 E4	2.20
14) 2,6-Dinitrot	8.005	7.244	6.878	6.645	6.758	6.778	6.958		7.038 E3	6.64
15) 2,4-Dinitrot	1.102	0.930	0.906	0.880	0.888	0.892	0.911		0.930 E4	8.36
16) o-Nitrotolue	5.194	4.804	4.848	4.493	4.691	4.697	4.799		4.789 E3	4.46
17) p-Nitrotolue	7.934	7.544	7.631	7.143	7.472	7.477	7.640		7.549 E3	3.15
18) m-Nitrotolue	6.835	7.097	7.192	6.782	7.103	7.117	7.290		7.060 E3	2.62

(#) = Out of Range ### Number of calibration levels exceeded format ###

8330_EX.M Fri Oct 20 16:25:52 2006

Initial Calibration Verification

Job Number: T16445
Account: ALGC Accutest Laboratories Gulf Coast, Inc.
Project: ITTXHO: Longhorn Army Ammunition Plant

Sample: GGG825-ICV825
Lab FileID: GG018286.D

Evaluate Continuing Calibration Report

Signal #1 : G:\HPCHEM\1\DATA\1018ODS\GG018286.D\dad1B.ch Vial: 10
Signal #2 : G:\HPCHEM\1\DATA\1018ODS\GG018286.D\dad1A.ch
Acq On : 18-Oct-2006, 17:39:03 Operator: MIKEE
Sample : ICV825-500 Inst : G1315B
Misc : OP18202,ggg825,1000,,,10,,water Multiplr: 1.00
IntFile Signal #1: EVENTS.E IntFile Signal #2: EVENTS2.E

Method : C:\HPCHEM\1\METHODS\8330_EX.M (Chemstation Integrator)
Title : Explosives by 8330
Last Update : Thu Oct 19 11:32:41 2006
Response via : Multiple Level Calibration

Min. RRF : 0.000 Min. Rel. Area : 50% Max. R.T. Dev 0.50min
Max. RRF Dev : 15% Max. Rel. Area : 200%

	Compound	Amount	Calc.	%Drift	Area%	Dev(min)	RT Window
1	HMX	500.000	531.119	-6.2	0	0.00	3.83- 4.83
2	TNX		----------NA----------				
3	DNX		----------NA----------				
4	MNX		----------NA----------				
5	RDX	500.000	507.091	-1.4	0	0.00	6.10- 7.10
6	1,3,5-Trinitrobenzene	500.000	533.853	-6.8	0	0.00	8.41- 9.41
7	1,3-Dinitrobenzene	500.000	523.924	-4.8	0	0.00	10.38-11.38
8	Tetryl	500.000	484.365	3.1	0	0.00	11.18-12.18
9	Nitrobenzene	500.000	531.046	-6.2	0	0.00	11.86-12.86
10 S	3,4-Dinitrotoluene		----------NA----------				
11	2,4,6-Trinitrotoluene	500.000	507.486	-1.5	0	0.00	13.56-14.56
12	4-Amino-2,6-Dinitrotol	500.000	515.885	-3.2	0	0.00	14.25-15.25
13	2-Amino-4,6-Dinitrotol	500.000	480.846	3.8	0	0.00	15.03-16.03
14	2,6-Dinitrotoluene	500.000	496.634	0.7	0	0.00	16.01-17.01
15	2,4-Dinitrotoluene	500.000	502.401	-0.5	0	0.00	16.52-17.52
16	o-Nitrotoluene	500.000	501.204	-0.2	0	0.00	19.59-20.59
17	p-Nitrotoluene	500.000	520.375	-4.1	0	0.00	20.92-21.92
18	m-Nitrotoluene	500.000	509.118	-1.8	0	0.00	22.61-23.61

***** Signal #2 *****

1	HMX	500.000	537.899	-7.6	0	0.00	3.83- 4.83
2	TNX		----------NA----------				
3	DNX		----------NA----------				
4	MNX		----------NA----------				
5	RDX	500.000	525.299	-5.1	0	0.00	6.10- 7.10
6	1,3,5-Trinitrobenzene	500.000	533.889	-6.8	0	0.00	8.41- 9.41
7	1,3-Dinitrobenzene	500.000	529.524	-5.9	0	0.00	10.38-11.38
8	Tetryl	500.000	489.295	2.1	0	0.00	11.18-12.18
9	Nitrobenzene	500.000	531.782	-6.4	0	0.00	11.86-12.86
10 S	3,4-Dinitrotoluene		----------NA----------				
11	2,4,6-Trinitrotoluene	500.000	505.844	-1.2	0	0.00	13.56-14.56
12	4-Amino-2,6-Dinitrotol	500.000	516.203	-3.2	0	0.00	14.25-15.25
13	2-Amino-4,6-Dinitrotol	500.000	480.458	3.9	0	0.00	15.03-16.03
14	2,6-Dinitrotoluene	500.000	493.423	1.3	0	0.00	16.01-17.01
15	2,4-Dinitrotoluene	500.000	499.987	0.0	0	0.00	16.52-17.52
16	o-Nitrotoluene	500.000	503.639	-0.7	0	0.00	19.59-20.59
17	p-Nitrotoluene	500.000	523.730	-4.7	0	0.00	20.92-21.92
18	m-Nitrotoluene	500.000	512.492	-2.5	0	0.00	22.61-23.61

Initial Calibration Verification

Job Number: T16445
Account: ALGC Accutest Laboratories Gulf Coast, Inc.
Project: ITTXHO: Longhorn Army Ammunition Plant

Sample: GGG825-ICV825
Lab FileID: GG018286.D

```
(#) = Out of Range                SPCC's out = 0  CCC's out = 0
 GG018286.D 8330_EX.M        Fri Oct 20 16:26:22 2006
```

Initial Calibration Verification

Job Number: T16445
Account: ALGC Accutest Laboratories Gulf Coast, Inc.
Project: ITTXHO: Longhorn Army Ammunition Plant

Sample: GGG826-ICV825
Lab FileID: GG018300.D

Evaluate Continuing Calibration Report

Signal #1 : G:\HPCHEM\1\DATA\1019ODS\GG018300.D\dad1B.ch Vial: 4
Signal #2 : G:\HPCHEM\1\DATA\1019ODS\GG018300.D\dad1A.ch
Acq On : 19-Oct-2006, 13:44:13 Operator: MIKEE
Sample : ICV825-500 Inst : G1315B
Misc : OP18222,ggg826,1000,,,10,,water Multiplr: 1.00
IntFile Signal #1: EVENTS.E IntFile Signal #2: EVENTS2.E

Method : C:\HPCHEM\1\METHODS\8330_EX.M (Chemstation Integrator)
Title : Explosives by 8330
Last Update : Thu Oct 19 11:32:41 2006
Response via : Multiple Level Calibration

Min. RRF : 0.000 Min. Rel. Area : 50% Max. R.T. Dev 0.50min
Max. RRF Dev : 15% Max. Rel. Area : 200%

		Compound	Amount	Calc.	%Drift	Area%	Dev(min)	RT Window
1		HMX		----------NA----------				
2		TNX	500.000	514.364	-2.9	0	0.00	4.15- 5.15
3		DNX	500.000	511.166	-2.2	0	0.00	4.58- 5.58
4		MNX	500.000	518.059	-3.6	0	-0.01	5.34- 6.34
5		RDX		----------NA----------				
6		1,3,5-Trinitrobenzene		----------NA----------				
7		1,3-Dinitrobenzene		----------NA----------				
8		Tetryl		----------NA----------				
9		Nitrobenzene		----------NA----------				
10	S	3,4-Dinitrotoluene		----------NA----------				
11		2,4,6-Trinitrotoluene		----------NA----------				
12		4-Amino-2,6-Dinitrotoluen		----------NA----------				
13		2-Amino-4,6-Dinitrotoluen		----------NA----------				
14		2,6-Dinitrotoluene		----------NA----------				
15		2,4-Dinitrotoluene		----------NA----------				
16		o-Nitrotoluene		----------NA----------				
17		p-Nitrotoluene		----------NA----------				
18		m-Nitrotoluene		----------NA----------				

***** Signal #2 *****

1		HMX		----------NA----------				
2		TNX	500.000	509.991	-2.0	0	0.00	4.15- 5.15
3		DNX	500.000	523.209	-4.6	0	0.00	4.58- 5.58
4		MNX	500.000	527.451	-5.5	0	-0.01	5.34- 6.34
5		RDX		----------NA----------				
6		1,3,5-Trinitrobenzene		----------NA----------				
7		1,3-Dinitrobenzene		----------NA----------				
8		Tetryl		----------NA----------				
9		Nitrobenzene		----------NA----------				
10	S	3,4-Dinitrotoluene		----------NA----------				
11		2,4,6-Trinitrotoluene		----------NA----------				
12		4-Amino-2,6-Dinitrotoluen		----------NA----------				
13		2-Amino-4,6-Dinitrotoluen		----------NA----------				
14		2,6-Dinitrotoluene		----------NA----------				
15		2,4-Dinitrotoluene		----------NA----------				
16		o-Nitrotoluene		----------NA----------				
17		p-Nitrotoluene		----------NA----------				
18		m-Nitrotoluene		----------NA----------				

Initial Calibration Verification

Job Number: T16445
Account: ALGC Accutest Laboratories Gulf Coast, Inc.
Project: ITTXHO: Longhorn Army Ammunition Plant

Sample: GGG826-ICV825
Lab FileID: GG018300.D

```
(#) = Out of Range                SPCC's out = 0  CCC's out = 0
 GG018286.D 8330_EX.M        Fri Oct 20 16:54:56 2006
```

Initial Calibration Summary

Job Number: T16445
Account: ALGC Accutest Laboratories Gulf Coast, Inc.
Project: ITTXHO: Longhorn Army Ammunition Plant

Sample: GGG827-ICC827
Lab FileID: GG018316.D

Response Factor Report G1315B

Method : C:\HPCHEM\1\METHODS\8330_RP.M (Chemstation Integrator)
Title : Explosives by 8330
Last Update : Fri Oct 20 14:03:32 2006
Response via : Initial Calibration

Calibration Files
20 =GG018313.D 100 =GG018314.D 250 =GG018315.D 500 =GG018316.D
750 =GG018317.D 1000=GG018318.D 2000=GG018319.D

	Compound	20	100	250	500	750	1000	2000	Avg	%RSD
1)	TNX	6.022	6.861	7.022	6.686	6.915	6.925	7.121	6.793 E3	5.38
2)	HMX	2.976	2.856	2.642	2.478	2.489	2.481	2.586	2.644 E3	7.51
3)	DNX	5.820	5.904	5.816	5.437	5.628	5.545	5.823	5.710 E3	3.05
4)	MNX	4.717	4.981	5.224	5.007	5.063	4.976	5.294	5.037 E3	3.73
5)	1,3,5-Trinitroben	7.302	7.899	8.123	7.797	7.946	7.847	8.236	7.879 E3	3.78
6)	RDX	3.327	3.935	3.881	3.729	3.710	3.686	3.841	3.730 E3	5.39
7)	1,3-Dinitrobenzen	1.122	1.117	1.144	1.096	1.117	1.113	1.146	1.122 E4	1.56
8)	Nitrobenzene	6.720	7.206	7.440	7.104	7.286	7.290	7.513	7.223 E3	3.61
9)	2,4,6-Trinitrotol	7.126	7.674	7.812	7.517	7.651	7.587	7.941	7.615 E3	3.39
10)	Tetryl	5.119	5.755	6.124	6.105	6.006	5.862	6.470	5.920 E3	7.10
11)S	3,4-Dinitrotoluen	4.973	4.941	4.969	4.829	4.912	4.883	5.055	4.938 E3	1.46
12)	2,6-Dinitrotoluen	6.023	5.649	5.657	5.415	5.544	5.538	5.672	5.643 E3	3.38
13)	2,4-Dinitrotoluen	1.200	1.036	1.034	0.995	1.012	1.007	1.038	1.046 E4	6.68
14)	o-Nitrotoluene	5.021	4.648	4.729	4.526	4.679	4.666	4.837	4.729 E3	3.36
15)	p-Nitrotoluene	4.036	3.890	3.967	3.762	3.919	3.914	4.051	3.934 E3	2.49
16)	4-Amino-2,6-Dinit	5.109	5.368	5.518	5.300	5.406	5.380	5.621	5.386 E3	3.01
17)	m-Nitrotoluene	4.743	4.946	5.173	4.937	5.131	5.119	5.324	5.053 E3	3.79
18)	2-Amino-4,6-Dinit	7.249	7.503	7.692	7.547	7.548	7.525	7.845	7.558 E3	2.42

Signal #2

1)	TNX	0.828	1.032	1.066	1.024	1.037	1.032	1.073	1.013 E4	8.25
2)	HMX	8.967	9.716	9.270	8.345	8.192	8.095	8.326	8.702 E3	7.15
3)	DNX	0.786	1.108	1.019	0.937	0.919	0.897	0.935	0.943 E4	10.65
4)	MNX	7.457	8.346	8.580	8.147	8.087	7.895	8.399	8.130 E3	4.58
5)	1,3,5-Trinitroben	1.449	1.617	1.667	1.594	1.616	1.593	1.673	1.601 E4	4.64
6)	RDX	6.077	6.386	6.563	6.283	6.229	6.181	6.460	6.311 E3	2.67
7)	1,3-Dinitrobenzen	1.294	1.326	1.427	1.333	1.365	1.364	1.397	1.358 E4	3.31
8)	Nitrobenzene	3.190	3.096	3.823	3.281	3.391	3.385	3.476	3.378 E3	6.96
9)	2,4,6-Trinitrotol	1.098	1.109	1.152	1.104	1.122	1.113	1.169	1.124 E4	2.37
10)	Tetryl	0.953	1.028	1.114	1.113	1.085	1.059	1.177	1.075 E4	6.67
11)S	3,4-Dinitrotoluen	6.832	6.775	6.813	6.648	6.692	6.629	6.906	6.756 E3	1.53
12)	2,6-Dinitrotoluen	8.344	7.760	7.758	7.423	7.578	7.556	7.765	7.740 E3	3.83
13)	2,4-Dinitrotoluen	1.104	0.941	0.942	0.911	0.927	0.919	0.952	0.957 E4	6.94
14)	o-Nitrotoluene	3.189	2.755	2.867	2.791	2.895	2.880	3.025	2.915 E3	5.09
15)	p-Nitrotoluene	2.114	1.879	1.907	1.825	1.916	1.926	1.998	1.938 E3	4.82
16)	4-Amino-2,6-Dinit	1.431	1.486	1.522	1.459	1.490	1.484	1.552	1.489 E4	2.66
17)	m-Nitrotoluene	2.353	2.391	2.516	2.444	2.546	2.567	2.681	2.500 E3	4.52
18)	2-Amino-4,6-Dinit	1.233	1.258	1.276	1.258	1.253	1.255	1.311	1.263 E4	1.92

(#) = Out of Range

8330_RP.M Mon Oct 23 13:34:29 2006

Initial Calibration Verification

Job Number: T16445
Account: ALGC Accutest Laboratories Gulf Coast, Inc.
Project: ITTXHO: Longhorn Army Ammunition Plant

Sample: GGG827-ICV827
Lab FileID: GG018320.D

Evaluate Continuing Calibration Report

Signal #1 : G:\HPCHEM\1\DATA\1020RP\GG018320.D\dad1B.ch Vial: 10
Signal #2 : G:\HPCHEM\1\DATA\1020RP\GG018320.D\dad1A.ch
Acq On : 20-Oct-2006, 14:03:23 Operator: MIKEE
Sample : ICV827-250 Inst : G1315B
Misc : OP18202,ggg827,1000,,,10,,water Multiplr: 1.00
IntFile Signal #1: EVENTS.E IntFile Signal #2: events2.e

Method : C:\HPCHEM\1\METHODS\8330_RP.M (Chemstation Integrator)
Title : Explosives by 8330
Last Update : Fri Oct 20 14:03:32 2006
Response via : Multiple Level Calibration

Min. RRF : 0.000 Min. Rel. Area : 50% Max. R.T. Dev 0.50min
Max. RRF Dev : 15% Max. Rel. Area : 200%

	Compound	Amount	Calc.	%Drift	Area%	Dev(min)	RT Window
1	TNX	250.000	258.384	-3.4	100	0.00	4.21- 5.21
2	HMX	250.000	260.989	-4.4	104	0.00	4.69- 5.69
3	DNX	250.000	254.013	-1.6	100	0.00	4.83- 5.83
4	MNX	250.000	255.142	-2.1	98	0.00	5.66- 6.66
5	1,3,5-Trinitrobenzene	250.000	264.789	-5.9	103	0.00	6.12- 7.12
6	RDX	250.000	252.023	-0.8	97	0.00	6.51- 7.51
7	1,3-Dinitrobenzene	250.000	257.308	-2.9	101	0.00	7.70- 8.70
8	Nitrobenzene	250.000	266.121	-6.4	103	0.00	8.24- 9.24
9	2,4,6-Trinitrotoluene	250.000	268.228	-7.3	105	0.00	8.71- 9.71
10	Tetryl	250.000	205.504	17.8#	79	0.00	9.41-10.41
11 S	3,4-Dinitrotoluene		----------NA----------				
12	2,6-Dinitrotoluene	250.000	254.196	-1.7	101	0.00	10.49-11.49
13	2,4-Dinitrotoluene	250.000	244.946	2.0	99	0.00	10.95-11.95
14	o-Nitrotoluene	250.000	248.278	0.7	99	0.00	11.79-12.79
15	p-Nitrotoluene	250.000	258.872	-3.5	103	0.00	12.45-13.45
16	4-Amino-2,6-Dinitrotol	250.000	255.921	-2.4	100	0.00	12.83-13.83
17	m-Nitrotoluene	250.000	252.478	-1.0	99	0.00	13.29-14.29
18	2-Amino-4,6-Dinitrotol	250.000	236.039	5.6	93	0.00	14.31-15.31

***** Signal #2 *****

1	TNX	250.000	262.147	-4.9	100	0.00	4.22- 5.22
2	HMX	250.000	276.033	-10.4	104	0.00	4.69- 5.69
3	DNX	250.000	263.149	-5.3	97	0.00	4.83- 5.83
4	MNX	250.000	255.967	-2.4	97	0.00	5.66- 6.66
5	1,3,5-Trinitrobenzene	250.000	265.613	-6.2	102	0.00	6.12- 7.12
6	RDX	250.000	248.723	0.5	96	0.00	6.51- 7.51
7	1,3-Dinitrobenzene	250.000	276.649	-10.7	105	0.00	7.70- 8.70
8	Nitrobenzene	250.000	301.148	-20.5#	106	0.00	8.24- 9.24
9	2,4,6-Trinitrotoluene	250.000	269.121	-7.6	105	0.00	8.71- 9.71
10	Tetryl	250.000	203.173	18.7#	78	0.00	9.41-10.41
11 S	3,4-Dinitrotoluene		----------NA----------				
12	2,6-Dinitrotoluene	250.000	252.008	-0.8	101	0.00	10.49-11.49
13	2,4-Dinitrotoluene	250.000	241.694	3.3	98	0.00	10.95-11.95
14	o-Nitrotoluene	250.000	241.466	3.4	98	0.00	11.79-12.79
15	p-Nitrotoluene	250.000	250.555	-0.2	102	0.00	12.46-13.46
16	4-Amino-2,6-Dinitrotol	250.000	255.253	-2.1	100	0.00	12.83-13.83
17	m-Nitrotoluene	250.000	250.572	-0.2	100	0.00	13.28-14.28
18	2-Amino-4,6-Dinitrotol	250.000	234.881	6.0	93	0.00	14.31-15.31

Initial Calibration Verification

Job Number: T16445
Account: ALGC Accutest Laboratories Gulf Coast, Inc.
Project: ITTXHO: Longhorn Army Ammunition Plant

Sample: GGG827-ICV827
Lab FileID: GG018320.D

```
(#) = Out of Range                SPCC's out = 0  CCC's out = 0
 GG018315.D 8330_RP.M         Mon Oct 23 13:35:35 2006
```

Initial Calibration Verification

Job Number: T16445
Account: ALGC Accutest Laboratories Gulf Coast, Inc.
Project: ITTXHO: Longhorn Army Ammunition Plant

Sample: GGG827-ICV827
Lab FileID: GG018321.D

Evaluate Continuing Calibration Report

Signal #1 : G:\HPCHEM\1\DATA\1020RP\GG018321.D\dad1B.ch Vial: 100
Signal #2 : G:\HPCHEM\1\DATA\1020RP\GG018321.D\dad1A.ch
Acq On : 20-Oct-2006, 15:10:45 Operator: MIKEE
Sample : ICV827-500 Inst : G1315B
Misc : OP18202,ggg827,1000,,,10,,water Multiplr: 1.00
IntFile Signal #1: EVENTS.E IntFile Signal #2: events2.e

Method : C:\HPCHEM\1\METHODS\8330_RP.M (Chemstation Integrator)
Title : Explosives by 8330
Last Update : Fri Oct 20 14:03:32 2006
Response via : Multiple Level Calibration

Min. RRF : 0.000 Min. Rel. Area : 50% Max. R.T. Dev 0.50min
Max. RRF Dev : 15% Max. Rel. Area : 200%

	Compound	Amount	Calc.	%Drift	Area%	Dev(min)	RT Window
1	TNX	500.000	565.302	-13.1	115	0.00	4.21- 5.21
2	HMX	500.000	543.872	-8.8	116	0.00	4.69- 5.69
3	DNX	500.000	551.643	-10.3	116	-0.01	4.83- 5.83
4	MNX	500.000	572.618	-14.5	115	0.00	5.66- 6.66
5	1,3,5-Trinitrobenzene	500.000	538.163	-7.6	109	0.00	6.12- 7.12
6	RDX	500.000	498.936	0.2	100	0.00	6.51- 7.51
7	1,3-Dinitrobenzene	500.000	510.060	-2.0	104	0.00	7.70- 8.70
8	Nitrobenzene	500.000	533.993	-6.8	109	0.00	8.24- 9.24
9	2,4,6-Trinitrotoluene	500.000	549.178	-9.8	111	0.00	8.71- 9.71
10	Tetryl	500.000	475.586	4.9	92	0.00	9.41-10.41
11 S	3,4-Dinitrotoluene	----------NA----------					
12	2,6-Dinitrotoluene	500.000	498.834	0.2	104	0.00	10.49-11.49
13	2,4-Dinitrotoluene	500.000	493.011	1.4	104	0.00	10.95-11.95
14	o-Nitrotoluene	500.000	510.083	-2.0	107	0.00	11.79-12.79
15	p-Nitrotoluene	500.000	530.499	-6.1	111	0.00	12.45-13.45
16	4-Amino-2,6-Dinitrotol	500.000	518.182	-3.6	105	-0.01	12.83-13.83
17	m-Nitrotoluene	500.000	521.475	-4.3	107	0.00	13.29-14.29
18	2-Amino-4,6-Dinitrotol	500.000	479.808	4.0	96	-0.01	14.31-15.31

***** Signal #2 *****

1	TNX	500.000	637.256	-27.5#	126	-0.01	4.22- 5.22
2	HMX	500.000	581.600	-16.3#	121	0.00	4.69- 5.69
3	DNX	500.000	552.258	-10.5	111	-0.01	4.83- 5.83
4	MNX	500.000	573.858	-14.8	115	0.00	5.66- 6.66
5	1,3,5-Trinitrobenzene	500.000	539.558	-7.9	108	0.00	6.12- 7.12
6	RDX	500.000	495.496	0.9	100	0.00	6.51- 7.51
7	1,3-Dinitrobenzene	500.000	512.019	-2.4	104	0.00	7.70- 8.70
8	Nitrobenzene	500.000	545.924	-9.2	112	0.00	8.24- 9.24
9	2,4,6-Trinitrotoluene	500.000	549.800	-10.0	112	0.00	8.71- 9.71
10	Tetryl	500.000	472.605	5.5	91	0.00	9.41-10.41
11 S	3,4-Dinitrotoluene	----------NA----------					
12	2,6-Dinitrotoluene	500.000	496.402	0.7	104	0.00	10.49-11.49
13	2,4-Dinitrotoluene	500.000	494.458	1.1	104	0.00	10.95-11.95
14	o-Nitrotoluene	500.000	518.803	-3.8	108	0.00	11.79-12.79
15	p-Nitrotoluene	500.000	534.408	-6.9	114	0.00	12.46-13.46
16	4-Amino-2,6-Dinitrotol	500.000	519.292	-3.9	106	-0.01	12.83-13.83
17	m-Nitrotoluene	500.000	532.272	-6.5	109	0.00	13.28-14.28
18	2-Amino-4,6-Dinitrotol	500.000	479.037	4.2	96	-0.01	14.31-15.31

Initial Calibration Verification

Job Number: T16445
Account: ALGC Accutest Laboratories Gulf Coast, Inc.
Project: ITTXHO: Longhorn Army Ammunition Plant

Sample: GGG827-ICV827
Lab FileID: GG018321.D

```
(#) = Out of Range                SPCC's out = 0  CCC's out = 0
 GG018316.D 8330_RP.M         Mon Oct 23 13:35:18 2006
```

Continuing Calibration Summary

Job Number: T16445
Account: ALGC Accutest Laboratories Gulf Coast, Inc.
Project: ITTXHO: Longhorn Army Ammunition Plant

Sample: GGG906-CC825
Lab FileID: GG020201.D

Evaluate Continuing Calibration Report

Signal #1 : G:\DATA\0302ODS\GG020201.D\dad1B.ch Vial: 2
Signal #2 : G:\DATA\0302ODS\GG020201.D\dad1A.ch
Acq On : 02-Mar-2007, 16:17:48 Operator: MIKEE
Sample : CC825-500 Inst : G1315B
Misc : OP19677,ggg906,1000,,,10,,water Multiplr: 1.00
IntFile Signal #1: EVENTS.E IntFile Signal #2: EVENTS2.E

Method : C:\HPCHEM\1\METHODS\8330_EX.M (Chemstation Integrator)
Title : Explosives by 8330
Last Update : Thu Mar 01 11:02:09 2007
Response via : Multiple Level Calibration

Min. RRF : 0.000 Min. Rel. Area : 50% Max. R.T. Dev 0.50min
Max. RRF Dev : 15% Max. Rel. Area : 200%

		Compound	Amount	Calc.	%Drift	Area%	Dev(min)	RT Window
1		HMX	500.000	490.559	1.9	101	0.00	3.86- 4.86
2		TNX	500.000	512.293	-2.5	103	-0.01	4.20- 5.20
3		DNX	500.000	511.151	-2.2	104	0.00	4.60- 5.60
4		MNX	500.000	508.598	-1.7	104	0.01	5.37- 6.37
5		RDX	500.000	518.998	-3.8	104	0.00	6.15- 7.15
6		1,3,5-Trinitrobenzene	500.000	498.455	0.3	103	0.02	8.43- 9.43
7		1,3-Dinitrobenzene	500.000	498.190	0.4	102	0.02	10.43-11.43
8		Tetryl	500.000	498.475	0.3	102	0.03	11.21-12.21
9		Nitrobenzene	500.000	503.313	-0.7	104	0.03	11.93-12.93
10	S	3,4-Dinitrotoluene	500.000	496.619	0.7	102	0.04	12.95-13.95
11		2,4,6-Trinitrotoluene	500.000	503.597	-0.7	103	0.04	13.60-14.60
12		4-Amino-2,6-Dinitrotol	500.000	496.441	0.7	102	0.05	14.37-15.37
13		2-Amino-4,6-Dinitrotol	500.000	500.727	-0.1	103	0.05	15.14-16.14
14		2,6-Dinitrotoluene	500.000	510.258	-2.1	107	0.05	16.10-17.10
15		2,4-Dinitrotoluene	500.000	480.817	3.8	101	0.05	16.60-17.60
16		o-Nitrotoluene	500.000	497.302	0.5	106	0.06	19.73-20.73
17		p-Nitrotoluene	500.000	500.449	-0.1	106	0.06	21.06-22.06
18		m-Nitrotoluene	500.000	506.087	-1.2	106	0.07	22.76-23.76

***** Signal #2 *****

1		HMX	500.000	500.092	-0.0	102	0.00	3.86- 4.86
2		TNX	500.000	509.529	-1.9	103	0.00	4.18- 5.18
3		DNX	500.000	520.538	-4.1	104	0.00	4.60- 5.60
4		MNX	500.000	521.239	-4.2	106	0.01	5.37- 6.37
5		RDX	500.000	566.452	-13.3	111	0.00	6.15- 7.15
6		1,3,5-Trinitrobenzene	500.000	505.722	-1.1	103	0.02	8.43- 9.43
7		1,3-Dinitrobenzene	500.000	502.475	-0.5	102	0.02	10.43-11.43
8		Tetryl	500.000	507.037	-1.4	102	0.03	11.21-12.21
9		Nitrobenzene	500.000	499.803	0.0	103	0.03	11.93-12.93
10	S	3,4-Dinitrotoluene	500.000	495.718	0.9	101	0.04	12.95-13.95
11		2,4,6-Trinitrotoluene	500.000	500.992	-0.2	103	0.04	13.60-14.60
12		4-Amino-2,6-Dinitrotol	500.000	497.188	0.6	102	0.05	14.37-15.37
13		2-Amino-4,6-Dinitrotol	500.000	499.032	0.2	103	0.05	15.14-16.14
14		2,6-Dinitrotoluene	500.000	496.978	0.6	105	0.05	16.10-17.10
15		2,4-Dinitrotoluene	500.000	472.110	5.6	100	0.05	16.60-17.60
16		o-Nitrotoluene	500.000	489.795	2.0	104	0.05	19.73-20.73
17		p-Nitrotoluene	500.000	496.698	0.7	105	0.06	21.06-22.06
18		m-Nitrotoluene	500.000	503.963	-0.8	105	0.07	22.77-23.77

Continuing Calibration Summary

Job Number: T16445
Account: ALGC Accutest Laboratories Gulf Coast, Inc.
Project: ITTXHO: Longhorn Army Ammunition Plant

Sample: GGG906-CC825
Lab FileID: GG020201.D

```
(#) = Out of Range                SPCC's out = 0  CCC's out = 0
 GG018282.D 8330_EX.M        Mon Mar 05 11:42:29 2007
```

Continuing Calibration Summary

Job Number: T16445
Account: ALGC Accutest Laboratories Gulf Coast, Inc.
Project: ITTXHO: Longhorn Army Ammunition Plant

Sample: GGG906-CC825
Lab FileID: GG020212.D

Evaluate Continuing Calibration Report

Signal #1 : G:\DATA\0302ODS\GG020212.D\dad1B.ch Vial: 3
Signal #2 : G:\DATA\0302ODS\GG020212.D\dad1A.ch
Acq On : 02-Mar-2007, 21:07:57 Operator: MIKEE
Sample : CC825-1000 Inst : G1315B
Misc : OP19677,ggg906,1000,,,10,,water Multiplr: 1.00
IntFile Signal #1: EVENTS.E IntFile Signal #2: EVENTS2.E

Method : C:\HPCHEM\1\METHODS\8330_EX.M (Chemstation Integrator)
Title : Explosives by 8330
Last Update : Thu Mar 01 11:02:09 2007
Response via : Multiple Level Calibration

Min. RRF : 0.000 Min. Rel. Area : 50% Max. R.T. Dev 0.50min
Max. RRF Dev : 15% Max. Rel. Area : 200%

		Compound	Amount	Calc.	%Drift	Area%	Dev(min)	RT Window
1		HMX	1000.000	969.184	3.1	98	0.00	3.86- 4.86
2		TNX	1000.000	1012.847	-1.3	100	-0.02	4.20- 5.20
3		DNX	1000.000	1011.041	-1.1	101	0.00	4.60- 5.60
4		MNX	1000.000	1001.768	-0.2	101	0.00	5.37- 6.37
5		RDX	1000.000	1012.522	-1.3	100	-0.01	6.15- 7.15
6		1,3,5-Trinitrobenzene	1000.000	982.133	1.8	99	0.00	8.43- 9.43
7		1,3-Dinitrobenzene	1000.000	981.873	1.8	99	0.00	10.43-11.43
8		Tetryl	1000.000	979.286	2.1	98	0.00	11.21-12.21
9		Nitrobenzene	1000.000	995.199	0.5	100	0.00	11.93-12.93
10	S	3,4-Dinitrotoluene	1000.000	971.158	2.9	98	0.00	12.95-13.95
11		2,4,6-Trinitrotoluene	1000.000	991.752	0.8	99	0.00	13.60-14.60
12		4-Amino-2,6-Dinitrotol	1000.000	975.490	2.5	98	0.00	14.37-15.37
13		2-Amino-4,6-Dinitrotol	1000.000	987.191	1.3	99	0.00	15.14-16.14
14		2,6-Dinitrotoluene	1000.000	995.657	0.4	102	0.00	16.10-17.10
15		2,4-Dinitrotoluene	1000.000	946.550	5.3	98	0.00	16.60-17.60
16		o-Nitrotoluene	1000.000	961.637	3.8	99	-0.01	19.73-20.73
17		p-Nitrotoluene	1000.000	975.200	2.5	99	-0.01	21.06-22.06
18		m-Nitrotoluene	1000.000	997.451	0.3	100	0.00	22.76-23.76

***** Signal #2 *****

1		HMX	1000.000	984.283	1.6	99	0.00	3.86- 4.86
2		TNX	1000.000	1002.891	-0.3	100	0.00	4.18- 5.18
3		DNX	1000.000	1012.877	-1.3	101	0.00	4.60- 5.60
4		MNX	1000.000	1004.320	-0.4	101	0.00	5.37- 6.37
5		RDX	1000.000	1044.793	-4.5	101	-0.02	6.15- 7.15
6		1,3,5-Trinitrobenzene	1000.000	984.579	1.5	99	0.00	8.43- 9.43
7		1,3-Dinitrobenzene	1000.000	989.010	1.1	99	0.00	10.43-11.43
8		Tetryl	1000.000	997.573	0.2	99	0.00	11.21-12.21
9		Nitrobenzene	1000.000	992.439	0.8	102	0.00	11.93-12.93
10	S	3,4-Dinitrotoluene	1000.000	962.803	3.7	98	0.00	12.95-13.95
11		2,4,6-Trinitrotoluene	1000.000	983.229	1.7	99	0.00	13.60-14.60
12		4-Amino-2,6-Dinitrotol	1000.000	974.885	2.5	98	0.00	14.37-15.37
13		2-Amino-4,6-Dinitrotol	1000.000	978.179	2.2	99	0.00	15.14-16.14
14		2,6-Dinitrotoluene	1000.000	974.861	2.5	101	0.00	16.10-17.10
15		2,4-Dinitrotoluene	1000.000	935.023	6.5	97	0.00	16.60-17.60
16		o-Nitrotoluene	1000.000	961.820	3.8	98	-0.01	19.73-20.73
17		p-Nitrotoluene	1000.000	982.213	1.8	99	0.00	21.06-22.06
18		m-Nitrotoluene	1000.000	1002.440	-0.2	99	-0.01	22.77-23.77

Continuing Calibration Summary

Job Number: T16445
Account: ALGC Accutest Laboratories Gulf Coast, Inc.
Project: ITTXHO: Longhorn Army Ammunition Plant

Sample: GGG906-CC825
Lab FileID: GG020212.D

```
(#) = Out of Range                SPCC's out = 0  CCC's out = 0
 GG018284.D 8330_EX.M        Mon Mar 05 11:42:13 2007
```

Continuing Calibration Summary

Job Number: T16445
Account: ALGC Accutest Laboratories Gulf Coast, Inc.
Project: ITTXHO: Longhorn Army Ammunition Plant

Sample: GGG906-CC825
Lab FileID: GG020224.D

Evaluate Continuing Calibration Report

Signal #1 : G:\DATA\0302ODS\GG020224.D\dad1B.ch Vial: 3
Signal #2 : G:\DATA\0302ODS\GG020224.D\dad1A.ch
Acq On : 03-Mar-2007, 02:38:33 Operator: MIKEE
Sample : CC825-1000 Inst : G1315B
Misc : OP19677,ggg906,1000,,,10,,water Multiplr: 1.00
IntFile Signal #1: EVENTS.E IntFile Signal #2: EVENTS2.E

Method : C:\HPCHEM\1\METHODS\8330_EX.M (Chemstation Integrator)
Title : Explosives by 8330
Last Update : Thu Mar 01 11:02:09 2007
Response via : Multiple Level Calibration

Min. RRF : 0.000 Min. Rel. Area : 50% Max. R.T. Dev 0.50min
Max. RRF Dev : 15% Max. Rel. Area : 200%

		Compound	Amount	Calc.	%Drift	Area%	Dev(min)	RT Window
1		HMX	1000.000	963.991	3.6	97	0.00	3.86- 4.86
2		TNX	1000.000	1010.267	-1.0	100	-0.02	4.20- 5.20
3		DNX	1000.000	1005.452	-0.5	101	0.00	4.60- 5.60
4		MNX	1000.000	1000.098	-0.0	100	0.00	5.37- 6.37
5		RDX	1000.000	1025.240	-2.5	102	-0.02	6.15- 7.15
6		1,3,5-Trinitrobenzene	1000.000	993.055	0.7	100	0.00	8.43- 9.43
7		1,3-Dinitrobenzene	1000.000	980.619	1.9	99	-0.01	10.43-11.43
8		Tetryl	1000.000	974.910	2.5	98	-0.02	11.21-12.21
9		Nitrobenzene	1000.000	982.824	1.7	99	-0.01	11.93-12.93
10	S	3,4-Dinitrotoluene	1000.000	957.890	4.2	96	-0.01	12.95-13.95
11		2,4,6-Trinitrotoluene	1000.000	980.868	1.9	98	-0.01	13.60-14.60
12		4-Amino-2,6-Dinitrotol	1000.000	962.421	3.8	97	0.00	14.37-15.37
13		2-Amino-4,6-Dinitrotol	1000.000	1009.138	-0.9	101	0.00	15.14-16.14
14		2,6-Dinitrotoluene	1000.000	1335.440	-33.5#	137	0.00	16.10-17.10
15		2,4-Dinitrotoluene	1000.000	1096.840	-9.7	113	-0.01	16.60-17.60
16		o-Nitrotoluene	1000.000	979.988	2.0	101	-0.02	19.73-20.73
17		p-Nitrotoluene	1000.000	1001.774	-0.2	102	-0.02	21.06-22.06
18		m-Nitrotoluene	1000.000	1009.574	-1.0	101	-0.02	22.76-23.76

***** Signal #2 *****

1		HMX	1000.000	940.821	5.9	95	0.00	3.86- 4.86
2		TNX	1000.000	949.976	5.0	95	0.00	4.18- 5.18
3		DNX	1000.000	962.122	3.8	96	0.00	4.60- 5.60
4		MNX	1000.000	1000.037	-0.0	101	0.00	5.37- 6.37
5		RDX	1000.000	1048.505	-4.9	101	-0.02	6.15- 7.15
6		1,3,5-Trinitrobenzene	1000.000	992.257	0.8	100	0.00	8.43- 9.43
7		1,3-Dinitrobenzene	1000.000	989.715	1.0	99	-0.01	10.43-11.43
8		Tetryl	1000.000	995.610	0.4	99	-0.02	11.21-12.21
9		Nitrobenzene	1000.000	966.310	3.4	99	-0.01	11.93-12.93
10	S	3,4-Dinitrotoluene	1000.000	952.955	4.7	97	-0.01	12.95-13.95
11		2,4,6-Trinitrotoluene	1000.000	974.813	2.5	98	-0.01	13.60-14.60
12		4-Amino-2,6-Dinitrotol	1000.000	968.590	3.1	98	0.00	14.37-15.37
13		2-Amino-4,6-Dinitrotol	1000.000	981.214	1.9	99	0.00	15.14-16.14
14		2,6-Dinitrotoluene	1000.000	1062.649	-6.3	110	0.00	16.10-17.10
15		2,4-Dinitrotoluene	1000.000	991.035	0.9	103	-0.01	16.60-17.60
16		o-Nitrotoluene	1000.000	973.475	2.7	99	-0.02	19.73-20.73
17		p-Nitrotoluene	1000.000	993.006	0.7	100	-0.02	21.06-22.06
18		m-Nitrotoluene	1000.000	1007.492	-0.7	100	-0.03	22.77-23.77

Continuing Calibration Summary

Job Number: T16445
Account: ALGC Accutest Laboratories Gulf Coast, Inc.
Project: ITTXHO: Longhorn Army Ammunition Plant

Sample: GGG906-CC825
Lab FileID: GG020224.D

```
(#) = Out of Range                SPCC's out = 0  CCC's out = 0
 GG018284.D 8330_EX.M        Mon Mar 05 11:42:13 2007
```

Continuing Calibration Summary

Job Number: T16445
Account: ALGC Accutest Laboratories Gulf Coast, Inc.
Project: ITTXHO: Longhorn Army Ammunition Plant

Sample: GGG907-CC827
Lab FileID: GG020231.D

Evaluate Continuing Calibration Report

Signal #1 : G:\DATA\0305RP\GG020231.D\dad1B.ch Vial: 2
Signal #2 : G:\DATA\0305RP\GG020231.D\dad1A.ch
Acq On : 05-Mar-2007, 13:23:34 Operator: MIKEE
Sample : CC827-500 Inst : G1315B
Misc : OP19677,ggg907,1000,,,10,,water Multiplr: 1.00
IntFile Signal #1: EVENTS.E IntFile Signal #2: events2.e

Method : C:\HPCHEM\1\METHODS\8330_RP.M (Chemstation Integrator)
Title : Explosives by 8330
Last Update : Fri Jan 26 08:35:20 2007
Response via : Multiple Level Calibration

Min. RRF : 0.000 Min. Rel. Area : 50% Max. R.T. Dev 0.50min
Max. RRF Dev : 15% Max. Rel. Area : 200%

	Compound	Amount	Calc.	%Drift	Area%	Dev(min)	RT Window
1	TNX	500.000	551.245	-10.2	112	0.02	4.24- 5.24
2	HMX	500.000	527.482	-5.5	113	0.00	4.75- 5.75
3	DNX	500.000	526.884	-5.4	111	0.01	4.87- 5.87
4	MNX	500.000	525.950	-5.2	106	0.00	5.72- 6.72
5	1,3,5-Trinitrobenzene	500.000	507.541	-1.5	103	0.00	6.17- 7.17
6	RDX	500.000	498.345	0.3	100	0.02	6.56- 7.56
7	1,3-Dinitrobenzene	500.000	495.147	1.0	101	0.00	7.78- 8.78
8	Nitrobenzene	500.000	509.807	-2.0	104	0.00	8.29- 9.29
9	2,4,6-Trinitrotoluene	500.000	506.824	-1.4	103	-0.01	8.80- 9.80
10	Tetryl	500.000	535.862	-7.2	104	0.00	9.52-10.52
11 S	3,4-Dinitrotoluene	500.000	492.695	1.5	101	0.00	10.21-11.21
12	2,6-Dinitrotoluene	500.000	489.618	2.1	102	-0.02	10.59-11.59
13	2,4-Dinitrotoluene	500.000	483.678	3.3	102	-0.02	11.06-12.06
14	o-Nitrotoluene	500.000	502.970	-0.6	105	-0.01	11.86-12.86
15	p-Nitrotoluene	500.000	503.359	-0.7	105	-0.01	12.53-13.53
16	4-Amino-2,6-Dinitrotol	500.000	502.155	-0.4	102	-0.03	12.95-13.95
17	m-Nitrotoluene	500.000	523.547	-4.7	107	-0.02	13.38-14.38
18	2-Amino-4,6-Dinitrotol	500.000	503.929	-0.8	101	-0.03	14.45-15.45

***** Signal #2 *****

1	TNX	500.000	539.038	-7.8	107	0.02	4.24- 5.24
2	HMX	500.000	501.388	-0.3	105	0.00	4.75- 5.75
3	DNX	500.000	520.169	-4.0	105	0.01	4.87- 5.87
4	MNX	500.000	520.287	-4.1	104	0.00	5.72- 6.72
5	1,3,5-Trinitrobenzene	500.000	508.259	-1.7	102	0.00	6.17- 7.17
6	RDX	500.000	496.557	0.7	100	0.02	6.56- 7.56
7	1,3-Dinitrobenzene	500.000	499.335	0.1	102	0.00	7.78- 8.78
8	Nitrobenzene	500.000	521.041	-4.2	107	0.00	8.29- 9.29
9	2,4,6-Trinitrotoluene	500.000	510.092	-2.0	104	-0.01	8.80- 9.80
10	Tetryl	500.000	533.664	-6.7	103	0.00	9.52-10.52
11 S	3,4-Dinitrotoluene	500.000	488.383	2.3	99	0.00	10.21-11.21
12	2,6-Dinitrotoluene	500.000	487.517	2.5	102	-0.02	10.59-11.59
13	2,4-Dinitrotoluene	500.000	483.800	3.2	102	-0.02	11.06-12.06
14	o-Nitrotoluene	500.000	519.246	-3.8	108	-0.01	11.86-12.86
15	p-Nitrotoluene	500.000	515.868	-3.2	110	0.00	12.54-13.54
16	4-Amino-2,6-Dinitrotol	500.000	499.988	0.0	102	-0.03	12.95-13.95
17	m-Nitrotoluene	500.000	538.963	-7.8	110	-0.02	13.37-14.37
18	2-Amino-4,6-Dinitrotol	500.000	499.905	0.0	100	-0.03	14.45-15.45

Continuing Calibration Summary

Job Number: T16445
Account: ALGC Accutest Laboratories Gulf Coast, Inc.
Project: ITTXHO: Longhorn Army Ammunition Plant

Sample: GGG907-CC827
Lab FileID: GG020231.D

```
(#) = Out of Range                SPCC's out = 0  CCC's out = 0
 GG018316.D 8330_RP.M         Tue Mar 06 10:57:51 2007
```

Continuing Calibration Summary

Job Number: T16445
Account: ALGC Accutest Laboratories Gulf Coast, Inc.
Project: ITTXHO: Longhorn Army Ammunition Plant

Sample: GGG907-ECC827
Lab FileID: GG020238.D

Evaluate Continuing Calibration Report

Signal #1 : G:\DATA\0305RP\GG020238.D\dad1B.ch Vial: 3
Signal #2 : G:\DATA\0305RP\GG020238.D\dad1A.ch
Acq On : 05-Mar-2007, 15:40:35 Operator: MIKEE
Sample : ECC827-1000 Inst : G1315B
Misc : OP19677,ggg907,1000,,,10,,water Multiplr: 1.00
IntFile Signal #1: EVENTS.E IntFile Signal #2: events2.e

Method : C:\HPCHEM\1\METHODS\8330_RP.M (Chemstation Integrator)
Title : Explosives by 8330
Last Update : Fri Jan 26 08:35:20 2007
Response via : Multiple Level Calibration

Min. RRF : 0.000 Min. Rel. Area : 50% Max. R.T. Dev 0.50min
Max. RRF Dev : 15% Max. Rel. Area : 200%

	Compound	Amount	Calc.	%Drift	Area%	Dev(min)	RT Window
1	TNX	1000.000	1064.078	-6.4	104	0.02	4.24- 5.24
2	HMX	1000.000	1064.872	-6.5	113	0.00	4.75- 5.75
3	DNX	1000.000	1029.858	-3.0	106	0.00	4.87- 5.87
4	MNX	1000.000	1052.110	-5.2	107	0.00	5.72- 6.72
5	1,3,5-Trinitrobenzene	1000.000	1020.840	-2.1	102	0.00	6.17- 7.17
6	RDX	1000.000	1020.894	-2.1	103	0.02	6.56- 7.56
7	1,3-Dinitrobenzene	1000.000	1005.302	-0.5	101	0.00	7.78- 8.78
8	Nitrobenzene	1000.000	1031.078	-3.1	102	0.00	8.29- 9.29
9	2,4,6-Trinitrotoluene	1000.000	1033.117	-3.3	104	-0.01	8.80- 9.80
10	Tetryl	1000.000	1104.790	-10.5	112	0.00	9.52-10.52
11 S	3,4-Dinitrotoluene	1000.000	1016.218	-1.6	103	0.00	10.21-11.21
12	2,6-Dinitrotoluene	1000.000	998.411	0.2	102	-0.02	10.59-11.59
13	2,4-Dinitrotoluene	1000.000	987.663	1.2	103	-0.02	11.06-12.06
14	o-Nitrotoluene	1000.000	1040.619	-4.1	105	-0.01	11.86-12.86
15	p-Nitrotoluene	1000.000	1034.751	-3.5	104	-0.01	12.53-13.53
16	4-Amino-2,6-Dinitrotol	1000.000	1018.262	-1.8	102	-0.02	12.95-13.95
17	m-Nitrotoluene	1000.000	1063.626	-6.4	105	-0.02	13.38-14.38
18	2-Amino-4,6-Dinitrotol	1000.000	1018.025	-1.8	102	-0.02	14.45-15.45

***** Signal #2 *****

1	TNX	1000.000	1065.753	-6.6	105	0.02	4.24- 5.24
2	HMX	1000.000	959.987	4.0	103	0.00	4.75- 5.75
3	DNX	1000.000	1023.085	-2.3	108	0.01	4.87- 5.87
4	MNX	1000.000	1036.881	-3.7	107	0.00	5.72- 6.72
5	1,3,5-Trinitrobenzene	1000.000	1018.352	-1.8	102	0.00	6.17- 7.17
6	RDX	1000.000	995.036	0.5	102	0.02	6.56- 7.56
7	1,3-Dinitrobenzene	1000.000	1003.575	-0.4	100	0.00	7.78- 8.78
8	Nitrobenzene	1000.000	1035.575	-3.6	103	0.00	8.29- 9.29
9	2,4,6-Trinitrotoluene	1000.000	1043.825	-4.4	105	-0.01	8.80- 9.80
10	Tetryl	1000.000	1097.433	-9.7	111	0.00	9.52-10.52
11 S	3,4-Dinitrotoluene	1000.000	1002.293	-0.2	102	0.00	10.21-11.21
12	2,6-Dinitrotoluene	1000.000	991.509	0.8	102	-0.02	10.59-11.59
13	2,4-Dinitrotoluene	1000.000	990.702	0.9	103	-0.02	11.06-12.06
14	o-Nitrotoluene	1000.000	1071.751	-7.2	108	-0.01	11.86-12.86
15	p-Nitrotoluene	1000.000	1073.626	-7.4	108	0.00	12.54-13.54
16	4-Amino-2,6-Dinitrotol	1000.000	1006.760	-0.7	101	-0.02	12.95-13.95
17	m-Nitrotoluene	1000.000	1093.803	-9.4	107	-0.02	13.37-14.37
18	2-Amino-4,6-Dinitrotol	1000.000	1006.963	-0.7	101	-0.02	14.45-15.45

Continuing Calibration Summary

Job Number: T16445
Account: ALGC Accutest Laboratories Gulf Coast, Inc.
Project: ITTXHO: Longhorn Army Ammunition Plant

Sample: GGG907-ECC827
Lab FileID: GG020238.D

(#) = Out of Range SPCC's out = 0 CCC's out = 0
GG018318.D 8330_RP.M Tue Mar 06 10:58:20 2007

General Chemistry

QC Data Summaries

(Accutest Laboratories Southeast, Inc.)

Includes the following where applicable:

- Method Blank and Blank Spike Summaries
- Duplicate Summaries
- Matrix Spike Summaries
- Instrument Runlogs/QC

METHOD BLANK AND SPIKE RESULTS SUMMARY
GENERAL CHEMISTRY

Login Number: T16445
Account: ALGC - Accutest Laboratories Gulf Coast, Inc.
Project: ITTXHO: Longhorn Army Ammunition Plant

Analyte	Batch ID	RL	MB Result	Units	Spike Amount	BSP Result	BSP %Recov	QC Limits
Perchlorate	GP9044/GN24408	10	<10	ug/l	50	50.1	100.2	85-115%

Associated Samples:
Batch GP9044: T16445-1, T16445-10, T16445-11, T16445-12, T16445-13, T16445-14, T16445-18, T16445-2, T16445-3, T16445-4, T16445-5, T16445-6, T16445-7, T16445-8, T16445-9
(*) Outside of QC limits

DUPLICATE RESULTS SUMMARY
GENERAL CHEMISTRY

Login Number: T16445
Account: ALGC - Accutest Laboratories Gulf Coast, Inc.
Project: ITTXHO: Longhorn Army Ammunition Plant

Analyte	Batch ID	QC Sample	Units	Original Result	DUP Result	RPD	QC Limits
Perchlorate	GP9044/GN24408	T16445-5	ug/l	27.8	29.4	5.6	0-15%
Perchlorate	GP9044/GN24408	T16445-6	ug/l	532	550	3.3	0-15%

Associated Samples:
Batch GP9044: T16445-1, T16445-10, T16445-11, T16445-12, T16445-13, T16445-14, T16445-18, T16445-2, T16445-3, T16445-4, T16445-5, T16445-6, T16445-7, T16445-8, T16445-9
(*) Outside of QC limits

MATRIX SPIKE RESULTS SUMMARY
GENERAL CHEMISTRY

Login Number: T16445
Account: ALGC - Accutest Laboratories Gulf Coast, Inc.
Project: ITTXHO: Longhorn Army Ammunition Plant

Analyte	Batch ID	QC Sample	Units	Original Result	Spike Amount	MS Result	%Rec	QC Limits
Perchlorate	GP9044/GN24408	T16445-5	ug/l	27.8	50	79.8	104.0	80-120%
Perchlorate	GP9044/GN24408	T16445-6	ug/l	532	50	583	102.0	80-120%

Associated Samples:
Batch GP9044: T16445-1, T16445-10, T16445-11, T16445-12, T16445-13, T16445-14, T16445-18, T16445-2, T16445-3, T16445-4, T16445-5, T16445-6, T16445-7, T16445-8, T16445-9
(*) Outside of QC limits
(N) Matrix Spike Rec. outside of QC limits

Accutest Laboratories Instrument Runlog
Inorganics Analyses

Login Number: T16445
Account: ALGC - Accutest Laboratories Gulf Coast, Inc.
Project: ITTXHO: Longhorn Army Ammunition Plant

File ID: 207030201.TXT Date Analyzed: 03/02/07 Methods: EPA 314
Analyst: MP Run ID: GN24408
Parameters: Perchlorate

Time	Sample Description	Dilution Factor	PS Recov	Comments
14:05	GN24408-CCV1	1		
14:20	GN24408-CCB1	1		
14:34	GP9044-MB1	1		
14:49	GP9044-B1	1		
15:31	GN24408-CRI1	1		
15:46	GN24408-IPC1	1		
16:00	T16445-1	1		
16:15	T16445-2	1		
16:29	T16445-3	1		
16:43	T16445-4	1		
16:58	T16445-5	1		
17:12	T16445-6	1		
17:27	GN24408-CCV2	1		
17:41	GN24408-CCB2	1		
17:55	T16445-7	1		
18:10	T16445-8	1		
18:24	T16445-9	1		
18:39	T16445-10	1		
18:53	T16445-11	1		
19:22	T16445-13	1		
19:36	T16445-14	1		
19:51	T16445-18	1		
20:05	ZZZZZZ	1		
20:19	GN24408-CCV3	1		
20:34	GN24408-CCB3	1		
20:48	GP9044-D1	1		
21:03	GP9044-S1	1		
21:17	GP9044-D2	1		
21:32	GP9044-S2	1		
21:46	GN24408-CCV4	1		
22:00	GN24408-CCB4	1		

Refer to raw data for calibration curve and standards.

Instrument QC Summary
Inorganics Analyses

Login Number: T16445
Account: ALGC - Accutest Laboratories Gulf Coast, Inc.
Project: ITTXHO: Longhorn Army Ammunition Plant

File ID: 207030201.TXT Date Analyzed: 03/02/07 Methods: EPA 314
Run ID: GN24408 Units: ug/l

Sample Number	Parameter	Result	RL	IDL/MDL	True Value	% Recov.	QC Limits
GN24408-CCV1	Perchlorate	52.1	10	4.0	50	104.2	85-115
GN24408-CCB1	Perchlorate	4.0 U	10	4.0			
GN24408-CRI1	Perchlorate	4.0 U	10	4.0	3	86.6	75-125
GN24408-IPC1	Perchlorate	23.2	10	4.0	25	92.8	80-120
GN24408-CCV2	Perchlorate	50.4	10	4.0	50	100.8	85-115
GN24408-CCB2	Perchlorate	4.0 U	10	4.0			
GN24408-CCV3	Perchlorate	52.6	10	4.0	50	105.2	85-115
GN24408-CCB3	Perchlorate	4.0 U	10	4.0			
GN24408-CCV4	Perchlorate	53.4	10	4.0	50	106.8	85-115
GN24408-CCB4	Perchlorate	4.0 U	10	4.0			

(!) Outside of QC limits

Accutest Laboratories Instrument Runlog
Inorganics Analyses

Login Number: T16445
Account: ALGC - Accutest Laboratories Gulf Coast, Inc.
Project: ITTXHO: Longhorn Army Ammunition Plant

File ID: 207030701.TXT Date Analyzed: 03/07/07 Methods: EPA 314
Analyst: MP Run ID: GN24437
Parameters: Perchlorate

Time	Sample Description	Dilution Factor	PS Recov	Comments
17:09	GN24437-CCV1	1		
17:23	GN24437-CCB1	1		
18:35	T16445-12	5		
18:50	GN24437-CCV2	1		
19:04	GN24437-CCB2	1		

Refer to raw data for calibration curve and standards.

Instrument QC Summary
Inorganics Analyses

Login Number: T16445
Account: ALGC - Accutest Laboratories Gulf Coast, Inc.
Project: ITTXHO: Longhorn Army Ammunition Plant

File ID: 207030701.TXT Date Analyzed: 03/07/07 Methods: EPA 314
Run ID: GN24437 Units: ug/l

Sample Number	Parameter	Result	RL	IDL/MDL	True Value	% Recov.	QC Limits
GN24437-CCV1	Perchlorate	52.5	10	4.0	50	105.0	85-115
GN24437-CCB1	Perchlorate	4.0 U	10	4.0			
GN24437-CCV2	Perchlorate	46.7	10	4.0	50	93.4	85-115
GN24437-CCB2	Perchlorate	4.0 U	10	4.0			

(!) Outside of QC limits

e-Hardcopy 2.0
Automated Report

00096457

Gulf Coast ACCUTEST Laboratories

IT'S ALL IN THE CHEMISTRY

05/08/08

Technical Report for

Shaw E & I, Inc.

Longhorn Army Ammunition Plant

PROJECT #117591

Accutest Job Number: T16448

Sampling Date: 02/24/07

Report to:

Shaw E & I, Inc.

jennifer.hoang@shawgrp.com

ATTN: Jennifer Hoang

Total number of pages in report: **126**

ACCUTEST LABORATORIES 50 YEARS 1956-2006

ACCREDITED IN ACCORDANCE WITH nelac

Test results contained within this data package meet the requirements of the National Environmental Laboratory Accreditation Conference and/or state specific certification programs as applicable.

Paul K Canevaro

Paul Canevaro
Laboratory Director

Client Service contact: Agnes Vicknair 713-271-4700

This report shall not be reproduced, except in its entirety, without the written approval of Accutest Laboratories. Test results relate only to samples analyzed.

Table of Contents

Section 1: Sample Summary **4**
Section 2: Case Narrative/Conformance Summary **5**
Section 3: Sample Results **9**
3.1: T16448-1: 50WW03 10
3.2: T16448-2: 29WW15 14
3.3: T16448-3: 12WW24 19
Section 4: Misc. Forms **20**
4.1: Chain of Custody 21
4.2: LRC Form 24
Section 5: GC/MS Volatiles - QC Data Summaries **28**
5.1: Method Blank Summary 29
5.2: Blank Spike Summary 32
5.3: Matrix Spike/Matrix Spike Duplicate Summary 35
5.4: Instrument Performance Checks (BFB) 38
5.5: Internal Standard Area Summaries 41
5.6: Surrogate Recovery Summaries 43
5.7: Initial and Continuing Calibration Summaries 44
Section 6: Metals Analysis - QC Data Summaries **51**
6.1: Inst QC MA2815: Cr 52
6.2: Prep QC MP5804: Cr 68
Section 7: General Chemistry - QC Data Summaries **73**
7.1: Method Blank and Spike Results Summary 74
7.2: Duplicate Results Summary 75
7.3: Matrix Spike Results Summary 76
Section 8: Misc. Forms (Accutest Laboratories Southeast, Inc.) **77**
8.1: Chain of Custody 78
Section 9: GC Volatiles - QC Data (Accutest Laboratories Southeast, Inc.) **80**
9.1: Method Blank Summary 81
9.2: Blank Spike Summary 82
9.3: Matrix Spike Summary 83
9.4: Duplicate Summary 84
9.5: Initial and Continuing Calibration Summaries 85
Section 10: GC Semi-volatiles - QC Data (Accutest Laboratories Southeast, Inc.) **91**
10.1: Method Blank Summary 92
10.2: Blank Spike Summary 94
10.3: Matrix Spike/Matrix Spike Duplicate Summary 96
10.4: Surrogate Recovery Summaries 97
10.5: GC Surrogate Retention Time Summaries 98
10.6: Initial and Continuing Calibration Summaries 101
Section 11: General Chemistry - QC Data (Accutest Laboratories Southeast, Inc.) **121**
11.1: Method Blank and Spike Results Summary 122
11.2: Duplicate Results Summary 123

Table of Contents

11.3: Matrix Spike Results Summary 124
11.4: Inst QC GN24408: Perchlorate 125

Accutest LabLink@31214 11:30 08-May-2008

Sample Summary

Shaw E & I, Inc.

Job No: T16448

Longhorn Army Ammunition Plant
Project No: PROJECT #117591

Sample Number	Collected Date	Time	By	Received	Matrix Code	Type	Client Sample ID
T16448-1	02/24/07	10:46		02/26/07	AQ	Ground Water	50WW03
T16448-2	02/24/07	10:38		02/26/07	AQ	Ground Water	29WW15
T16448-3	02/24/07	10:00		02/26/07	AQ	Ground Water	12WW24

SAMPLE DELIVERY GROUP CASE NARRATIVE

Client: Shaw E & I, Inc. **Job No** T16448

Site: Longhorn Army Ammunition Plant **Report Date** 3/13/2007 5:05:01 PM

3 Samples were collected on 02/24/2007 and were received at Accutest on 02/26/2007 properly preserved, at 2.3 Deg. C and intact. These Samples received an Accutest job number of T16448. A listing of the Laboratory Sample ID, Client Sample ID and dates of collection are presented in the Results Summary Section of this report.

Except as noted below, all method specified calibrations and quality control performance criteria were met for this job. For more information, please refer to QC summary pages.

Volatiles by GCMS By Method SW846 8260B

Matrix AQ **Batch ID:** VF2315

- All samples were analyzed within the recommended method holding time.
- All method blanks for this batch meet method specific criteria.
- Sample(s) T16445-3MS, T16445-3MSD were used as the QC samples indicated.
- Matrix Spike Recovery(s) for cis-1,2-Dichloroethylene, Trichloroethylene are outside control limits. Outside control limits due to high level in sample relative to spike amount.

Matrix AQ **Batch ID:** VF2318

- All samples were analyzed within the recommended method holding time.
- All method blanks for this batch meet method specific criteria.
- Sample(s) T16445-4MS, T16445-4MSD were used as the QC samples indicated.

Volatiles by GC By Method RSKSOP-147/175

Matrix AQ **Batch ID:** F:GXY996

- Analysis performed at Accutest Laboratories, Orlando, FL.

Metals By Method SW846 6010B

Matrix AQ **Batch ID:** MP5804

- All samples were digested within the recommended method holding time.
- All samples were analyzed within the recommended method holding time.
- All method blanks for this batch meet method specific criteria.
- Sample(s) T16414-1DUP, T16414-1MS, T16414-1MSD, T16414-1SDL were used as the QC samples for metals.

Wet Chemistry By Method EPA 120.1

Matrix AQ **Batch ID:** F:R17947

- T16448-1 for Specific Conductivity: Analysis performed at Accutest Laboratories, Orlando, FL.

Matrix AQ **Batch ID:** GN11355

- All samples were analyzed within the recommended method holding time.
- All method blanks for this batch meet method specific criteria.
- Sample(s) T16445-5DUP were used as the QC samples for Specific Conductivity.

Wet Chemistry By Method EPA 150.1/9040

Matrix	AQ	Batch ID:	GN11334

- Sample(s) T16448-1DUP were used as the QC samples for pH.
- The following samples were run outside of holding time for method EPA 150.1/9040: T16448-1

Wet Chemistry By Method EPA 310.1

Matrix	AQ	Batch ID:	GN11375

- All samples were analyzed within the recommended method holding time.
- All method blanks for this batch meet method specific criteria.
- Sample(s) T16445-5DUP, T16445-5MS were used as the QC samples for Alkalinity, Total as CaCO3.

Wet Chemistry By Method EPA 314

Matrix	AQ	Batch ID:	F:GP9044

- Perchlorate Analysis performed at Accutest Laboratories, Orlando, FL.

Wet Chemistry By Method EPA 325.3

Matrix	AQ	Batch ID:	GN11343

- All samples were analyzed within the recommended method holding time.
- All method blanks for this batch meet method specific criteria.
- Sample(s) T16445-5DUP, T16445-5MS were used as the QC samples for Chloride.

Wet Chemistry By Method EPA 353.2

Matrix	AQ	Batch ID:	GN11300

- All method blanks for this batch meet method specific criteria.
- Sample(s) T16445-18DUP, T16445-18MS were used as the QC samples for Nitrogen, Nitrite.

Matrix	AQ	Batch ID:	GN11301

- All method blanks for this batch meet method specific criteria.
- Sample(s) T16445-18DUP, T16445-18MS were used as the QC samples for Nitrogen, Nitrate + Nitrite.

Wet Chemistry By Method EPA 375.3

Matrix	AQ	Batch ID:	GN11356

- All samples were analyzed within the recommended method holding time.
- All method blanks for this batch meet method specific criteria.
- Sample(s) T16448-1DUP, T16448-1MS were used as the QC samples for Sulfate.

Wet Chemistry By Method EPA 376.1

Matrix	AQ	Batch ID:	GN11313

- All samples were analyzed within the recommended method holding time.
- All method blanks for this batch meet method specific criteria.
- Sample(s) T16445-5DUP were used as the QC samples for Sulfide.

Wet Chemistry By Method EPA 415.1/9060

Matrix	AQ	Batch ID:	GN11304

- All samples were analyzed within the recommended method holding time.
- All method blanks for this batch meet method specific criteria.
- Sample(s) T16445-18DUP, T16445-18MS were used as the QC samples for Total Organic Carbon.

Wet Chemistry By Method SM18 4500NO3E/NO2B

Matrix	AQ	Batch ID:	R15469

- Nitrogen, Nitrate: Calculated as: (Nitrogen, Nitrate + Nitrite) - (Nitrogen, Nitrite)

Accutest Laboratories Gulf Coast (ALGC) certifies that this report meets the project requirements for analytical data produced for the samples as received at ALGC and as stated on the COC. ALGC certifies that the data meets the Data QualityObjectives for precision, accuracy and completeness as specified in the ALGC Quality Manual except as noted above. This report is to be used in its entirety. ALGC is not responsible for any assumptions of data quality if partial data packages are used

SAMPLE DELIVERY GROUP CASE NARRATIVE

Client: Accutest Laboratories Gulf Coast, Inc. **Job No:** T16448

Site: ITTXHO: Longhorn Army Ammunition Plant **Report Date:** 3/13/2007 11:35:47

2 Samples were collected on 02/24/2007 and were received at Accutest SE on 02/28/2007 properly preserved, at 1.8 Deg. C and intact. These Samples had an Accutest job number of T16448. A listing of the Laboratory Sample ID, Client Sample ID and dates of collection are presented in the Results Summary Section of this report.

Except as noted below, all method specified calibrations and quality control performance criteria were met for this job. For more information, please refer to QC summary pages.

Volatiles by GC by Method RSKSOP-147/175

Matrix: AQ **Batch ID:** GXY996

All samples were analyzed within the recommended method holding time.

All method blanks for this batch meet method specific criteria.

Samples F47731-7MS, F47769-9DUP were used as the QC samples indicated.

Matrix Spike Recoverys for Ethane, Ethene are outside control limits. Probable cause: due to matrix interference.

Extractables by GC by Method SW846 8330A

Matrix: AQ **Batch ID:** OP19677

All samples were extracted within the recommended method holding time.

All samples were analyzed within the recommended method holding time.

All method blanks for this batch meet method specific criteria.

Samples F47539-3MS, F47539-3MSD were used as the QC samples indicated.

Wet Chemistry by Method EPA 314

Matrix: AQ **Batch ID:** GP9044

All samples were prepped within the recommended method holding time.

All samples were analyzed within the recommended method holding time.

All method blanks for this batch meet method specific criteria.

Samples T16445-5DUP, T16445-5MS were used as the QC samples for Perchlorate.

Accutest Laboratories Southeast (ALSE) certifies that this report meets the project requirements for analytical data produced for the samples as received at ALSE and as stated on the COC. ALSE certifies that the data meets the Data Quality Objectives for precision, accuracy and completeness as specified in the ALSE Quality Manual except as noted above. This report is to be used in its entirety. ALSE is not responsible for any assumptions of data quality if partial data packages are used.

Narrative prepared by:

_____

Ellen Pampel, Inorganic QA (signature on file)

Date: March 13, 2007

Tuesday, March 13, 2007

Sample Results

Report of Analysis

Accutest LabLink@31214 11:30 08-May-2008

Report of Analysis

Client Sample ID:	50WW03		
Lab Sample ID:	T16448-1	**Date Sampled:**	02/24/07
Matrix:	AQ - Ground Water	**Date Received:**	02/26/07
Method:	SW846 8260B	**Percent Solids:**	n/a
Project:	Longhorn Army Ammunition Plant		

	File ID	DF	Analyzed	By	Prep Date	Prep Batch	Analytical Batch
Run #1	F0079188.D	1	03/07/07	LJ	n/a	n/a	VF2315
Run #2							

	Purge Volume
Run #1	5.0 ml
Run #2	

VOA TCL List

CAS No.	Compound	Result	RL	MDL	Units	Q
67-64-1	Acetone	2.8 U	50	2.8	ug/l	
71-43-2	Benzene	0.23 U	2.0	0.23	ug/l	
75-27-4	Bromodichloromethane	0.33 U	2.0	0.33	ug/l	
75-25-2	Bromoform	0.65 U	2.0	0.65	ug/l	
108-90-7	Chlorobenzene	0.54 U	2.0	0.54	ug/l	
75-00-3	Chloroethane	0.46 U	2.0	0.46	ug/l	
67-66-3	Chloroform	0.66 U	2.0	0.66	ug/l	
75-15-0	Carbon disulfide	0.62 U	2.0	0.62	ug/l	
56-23-5	Carbon tetrachloride	0.52 U	2.0	0.52	ug/l	
75-34-3	1,1-Dichloroethane	0.52 U	2.0	0.52	ug/l	
75-35-4	1,1-Dichloroethylene	0.68 U	2.0	0.68	ug/l	
107-06-2	1,2-Dichloroethane	0.53 U	2.0	0.53	ug/l	
78-87-5	1,2-Dichloropropane	0.59 U	2.0	0.59	ug/l	
124-48-1	Dibromochloromethane	0.68 U	2.0	0.68	ug/l	
156-59-2	cis-1,2-Dichloroethylene	0.83 U	2.0	0.83	ug/l	
10061-01-5	cis-1,3-Dichloropropene	0.59 U	2.0	0.59	ug/l	
156-60-5	trans-1,2-Dichloroethylene	0.75 U	2.0	0.75	ug/l	
10061-02-6	trans-1,3-Dichloropropene	0.61 U	2.0	0.61	ug/l	
100-41-4	Ethylbenzene	0.48 U	2.0	0.48	ug/l	
591-78-6	2-Hexanone	1.9 U	10	1.9	ug/l	
108-10-1	4-Methyl-2-pentanone	7.3 U	10	7.3	ug/l	
74-83-9	Methyl bromide	0.47 U	2.0	0.47	ug/l	
74-87-3	Methyl chloride	0.60 U	2.0	0.60	ug/l	
75-09-2	Methylene chloride	0.67 U	5.0	0.67	ug/l	
78-93-3	Methyl ethyl ketone	3.0 U	10	3.0	ug/l	
100-42-5	Styrene	0.50 U	2.0	0.50	ug/l	
71-55-6	1,1,1-Trichloroethane	0.37 U	2.0	0.37	ug/l	
79-34-5	1,1,2,2-Tetrachloroethane	0.46 U	2.0	0.46	ug/l	
79-00-5	1,1,2-Trichloroethane	0.66 U	2.0	0.66	ug/l	
127-18-4	Tetrachloroethylene	0.74 U	2.0	0.74	ug/l	
108-88-3	Toluene	0.54 U	2.0	0.54	ug/l	
79-01-6	Trichloroethylene	0.63 U	2.0	0.63	ug/l	

U = Not detected MDL - Method Detection Limit
RL = Reporting Limit
E = Indicates value exceeds calibration range
J = Indicates an estimated value
B = Indicates analyte found in associated method blank
N = Indicates presumptive evidence of a compound

Accutest LabLink@31214 11:30 08-May-2008

Report of Analysis

Client Sample ID:	50WW03		
Lab Sample ID:	T16448-1	**Date Sampled:**	02/24/07
Matrix:	AQ - Ground Water	**Date Received:**	02/26/07
Method:	SW846 8260B	**Percent Solids:**	n/a
Project:	Longhorn Army Ammunition Plant		

VOA TCL List

CAS No.	Compound	Result	RL	MDL	Units	Q
75-01-4	Vinyl chloride	0.32 U	2.0	0.32	ug/l	
1330-20-7	Xylene (total)	1.1 U	6.0	1.1	ug/l	

CAS No.	Surrogate Recoveries	Run# 1	Run# 2	Limits
1868-53-7	Dibromofluoromethane	106%		73-139%
17060-07-0	1,2-Dichloroethane-D4	102%		66-139%
2037-26-5	Toluene-D8	106%		77-148%
460-00-4	4-Bromofluorobenzene	121%		84-150%

U = Not detected MDL - Method Detection Limit
RL = Reporting Limit
E = Indicates value exceeds calibration range
J = Indicates an estimated value
B = Indicates analyte found in associated method blank
N = Indicates presumptive evidence of a compound

Accutest LabLink@31214 11:30 08-May-2008

Report of Analysis

Client Sample ID:	50WW03		
Lab Sample ID:	T16448-1	**Date Sampled:**	02/24/07
Matrix:	AQ - Ground Water	**Date Received:**	02/26/07
Method:	RSKSOP-147/175	**Percent Solids:**	n/a
Project:	Longhorn Army Ammunition Plant		

	File ID	DF	Analyzed	By	Prep Date	Prep Batch	Analytical Batch
Run #1 [a]	XY025336.D	1	03/08/07	AFL	n/a	n/a	F:GXY996
Run #2							

CAS No.	Compound	Result	RL	MDL	Units	Q
74-82-8	Methane	0.56	0.50	0.30	ug/l	
74-84-0	Ethane	0.60 U	1.0	0.60	ug/l	
74-85-1	Ethene	0.80 U	1.0	0.80	ug/l	

(a) Analysis performed at Accutest Laboratories, Orlando, FL.

U = Not detected MDL - Method Detection Limit
RL = Reporting Limit
E = Indicates value exceeds calibration range
J = Indicates an estimated value
B = Indicates analyte found in associated method blank
N = Indicates presumptive evidence of a compound

Accutest LabLink@31214 11:30 08-May-2008

Report of Analysis

Client Sample ID:	50WW03		
Lab Sample ID:	T16448-1	**Date Sampled:**	02/24/07
Matrix:	AQ - Ground Water	**Date Received:**	02/26/07
		Percent Solids:	n/a
Project:	Longhorn Army Ammunition Plant		

General Chemistry

Analyte	Result	RL	MDL	Units	DF	Analyzed	By	Method
Perchlorate by IC								
Perchlorate [a]	4.0 U	10	4.0	ug/l	1	03/02/07 20:05	AFL	EPA 314
Alkalinity, Total as CaCO3	417	25	0.30	mg/l	5	03/08/07 12:50	EB	EPA 310.1
Carbon Dioxide	416	5.0		mg/l	1	03/12/07	RM	SM18 4500CO2D
Chloride	944	50	0.57	mg/l	50	03/05/07 12:15	EB	EPA 325.3
Nitrogen, Nitrate [b]	< 0.10	0.10	0.0050	mg/l	1	02/26/07 14:00	LN	SM18 4500NO3E/NO2B
Nitrogen, Nitrate + Nitrite	0.010 B	0.050	0.0050	mg/l	1	02/26/07 13:03	LN	EPA 353.2
Nitrogen, Nitrite	0.0030 U	0.050	0.0030	mg/l	1	02/26/07 14:00	LN	EPA 353.2
Specific Conductivity [a]	3340	0.50	0.50	umhos/cm	1	03/06/07	AFL	EPA 120.1
Sulfate	403	100	2.6	mg/l	10	03/06/07 18:00	EB	EPA 375.3
Sulfide	0.0 B	0.20		mg/l	1	03/01/07 12:10	LN	EPA 376.1
Total Organic Carbon	2.0	1.0	0.092	mg/l	1	02/27/07 09:10	LN	EPA 415.1/9060
pH	7.1			su	1	03/02/07 08:10	EB	EPA 150.1/9040

(a) Analysis performed at Accutest Laboratories, Orlando, FL.
(b) Calculated as: (Nitrogen, Nitrate + Nitrite) - (Nitrogen, Nitrite)

RL = Reporting Limit
MDL = Method Detection Limit
U = Indicates a result < MDL
B = Indicates a result > = MDL but < RL

Accutest LabLink@31214 11:30 08-May-2008

Report of Analysis

Client Sample ID:	29WW15		
Lab Sample ID:	T16448-2	**Date Sampled:**	02/24/07
Matrix:	AQ - Ground Water	**Date Received:**	02/26/07
Method:	SW846 8260B	**Percent Solids:**	n/a
Project:	Longhorn Army Ammunition Plant		

	File ID	DF	Analyzed	By	Prep Date	Prep Batch	Analytical Batch
Run #1	F0079189.D	1	03/07/07	LJ	n/a	n/a	VF2315
Run #2	F0079239.D	50	03/08/07	LJ	n/a	n/a	VF2318

	Purge Volume
Run #1	5.0 ml
Run #2	5.0 ml

VOA TCL List

CAS No.	Compound	Result	RL	MDL	Units	Q
67-64-1	Acetone	2.8 U	50	2.8	ug/l	
71-43-2	Benzene	0.47	2.0	0.23	ug/l	J
75-27-4	Bromodichloromethane	0.33 U	2.0	0.33	ug/l	
75-25-2	Bromoform	0.65 U	2.0	0.65	ug/l	
108-90-7	Chlorobenzene	0.54 U	2.0	0.54	ug/l	
75-00-3	Chloroethane	0.46 U	2.0	0.46	ug/l	
67-66-3	Chloroform	5.3	2.0	0.66	ug/l	
75-15-0	Carbon disulfide	0.62 U	2.0	0.62	ug/l	
56-23-5	Carbon tetrachloride	0.52 U	2.0	0.52	ug/l	
75-34-3	1,1-Dichloroethane	3.4	2.0	0.52	ug/l	
75-35-4	1,1-Dichloroethylene	7.5	2.0	0.68	ug/l	
107-06-2	1,2-Dichloroethane	5520 [a]	100	27	ug/l	
78-87-5	1,2-Dichloropropane	0.59 U	2.0	0.59	ug/l	
124-48-1	Dibromochloromethane	0.68 U	2.0	0.68	ug/l	
156-59-2	cis-1,2-Dichloroethylene	1.8	2.0	0.83	ug/l	J
10061-01-5	cis-1,3-Dichloropropene	0.59 U	2.0	0.59	ug/l	
156-60-5	trans-1,2-Dichloroethylene	15.6	2.0	0.75	ug/l	
10061-02-6	trans-1,3-Dichloropropene	0.61 U	2.0	0.61	ug/l	
100-41-4	Ethylbenzene	0.48 U	2.0	0.48	ug/l	
591-78-6	2-Hexanone	1.9 U	10	1.9	ug/l	
108-10-1	4-Methyl-2-pentanone	7.3 U	10	7.3	ug/l	
74-83-9	Methyl bromide	0.47 U	2.0	0.47	ug/l	
74-87-3	Methyl chloride	0.60 U	2.0	0.60	ug/l	
75-09-2	Methylene chloride	3.0	5.0	0.67	ug/l	J
78-93-3	Methyl ethyl ketone	3.0 U	10	3.0	ug/l	
100-42-5	Styrene	0.50 U	2.0	0.50	ug/l	
71-55-6	1,1,1-Trichloroethane	0.37 U	2.0	0.37	ug/l	
79-34-5	1,1,2,2-Tetrachloroethane	0.46 U	2.0	0.46	ug/l	
79-00-5	1,1,2-Trichloroethane	1.9	2.0	0.66	ug/l	J
127-18-4	Tetrachloroethylene	0.74 U	2.0	0.74	ug/l	
108-88-3	Toluene	0.54 U	2.0	0.54	ug/l	
79-01-6	Trichloroethylene	344 [a]	100	32	ug/l	

U = Not detected MDL - Method Detection Limit
RL = Reporting Limit
E = Indicates value exceeds calibration range
J = Indicates an estimated value
B = Indicates analyte found in associated method blank
N = Indicates presumptive evidence of a compound

Report of Analysis

Client Sample ID:	29WW15		
Lab Sample ID:	T16448-2	**Date Sampled:**	02/24/07
Matrix:	AQ - Ground Water	**Date Received:**	02/26/07
Method:	SW846 8260B	**Percent Solids:**	n/a
Project:	Longhorn Army Ammunition Plant		

VOA TCL List

CAS No.	Compound	Result	RL	MDL	Units	Q
75-01-4	Vinyl chloride	0.32 U	2.0	0.32	ug/l	
1330-20-7	Xylene (total)	1.1 U	6.0	1.1	ug/l	

CAS No.	Surrogate Recoveries	Run# 1	Run# 2	Limits
1868-53-7	Dibromofluoromethane	108%	106%	73-139%
17060-07-0	1,2-Dichloroethane-D4	105%	100%	66-139%
2037-26-5	Toluene-D8	106%	105%	77-148%
460-00-4	4-Bromofluorobenzene	122%	118%	84-150%

(a) Result is from Run# 2

U = Not detected MDL - Method Detection Limit
RL = Reporting Limit
E = Indicates value exceeds calibration range
J = Indicates an estimated value
B = Indicates analyte found in associated method blank
N = Indicates presumptive evidence of a compound

Accutest LabLink@31214 11:30 08-May-2008

Report of Analysis

Client Sample ID:	29WW15		
Lab Sample ID:	T16448-2	**Date Sampled:**	02/24/07
Matrix:	AQ - Ground Water	**Date Received:**	02/26/07
Method:	RSKSOP-147/175	**Percent Solids:**	n/a
Project:	Longhorn Army Ammunition Plant		

	File ID	DF	Analyzed	By	Prep Date	Prep Batch	Analytical Batch
Run #1 [a]	XY025337.D	1	03/08/07	AFL	n/a	n/a	F:GXY996
Run #2							

CAS No.	Compound	Result	RL	MDL	Units	Q
74-82-8	Methane	1.27	0.50	0.30	ug/l	
74-84-0	Ethane	0.60 U	1.0	0.60	ug/l	
74-85-1	Ethene	0.80 U	1.0	0.80	ug/l	

(a) Analysis performed at Accutest Laboratories, Orlando, FL.

U = Not detected MDL - Method Detection Limit
RL = Reporting Limit
E = Indicates value exceeds calibration range
J = Indicates an estimated value
B = Indicates analyte found in associated method blank
N = Indicates presumptive evidence of a compound

Accutest LabLink@31214 11:30 08-May-2008

Report of Analysis

Client Sample ID:	29WW15		
Lab Sample ID:	T16448-2	**Date Sampled:**	02/24/07
Matrix:	AQ - Ground Water	**Date Received:**	02/26/07
Method:	SW846 8330A SW846 3535A	**Percent Solids:**	n/a
Project:	Longhorn Army Ammunition Plant		

	File ID	DF	Analyzed	By	Prep Date	Prep Batch	Analytical Batch
Run #1 [a]	GG020223.D	1	03/03/07	AFL	03/01/07	F:OP19677	F:GGG906
Run #2							

	Initial Volume	Final Volume
Run #1	600 ml	10.0 ml
Run #2		

CAS No.	Compound	Result	RL	MDL	Units	Q
2691-41-0	HMX	0.10 U	0.33	0.10	ug/l	
121-82-4	RDX	0.13 U	0.33	0.13	ug/l	
99-65-0	1,3-Dinitrobenzene	0.12 U	0.33	0.12	ug/l	
606-20-2	2,6-Dinitrotoluene	0.11 U	0.33	0.11	ug/l	
121-14-2	2,4-Dinitrotoluene	0.13 U	0.33	0.13	ug/l	
35572-78-2	2-amino-4,6-Dinitrotoluene	0.12 U	0.33	0.12	ug/l	
19406-51-0	4-amino-2,6-Dinitrotoluene	0.13 U	0.33	0.13	ug/l	
98-95-3	Nitrobenzene	0.10 U	0.33	0.10	ug/l	
88-72-2	o-Nitrotoluene	0.10 U	0.33	0.10	ug/l	
99-08-1	m-Nitrotoluene	0.13 U	0.33	0.13	ug/l	
99-99-0	p-Nitrotoluene	0.13 U	0.33	0.13	ug/l	
479-45-8	Tetryl	0.13 U	0.33	0.13	ug/l	
99-35-4	1,3,5-Trinitrobenzene	0.16 U	0.33	0.16	ug/l	
118-96-7	2,4,6-Trinitrotoluene	0.13 U	0.33	0.13	ug/l	

CAS No.	Surrogate Recoveries	Run# 1	Run# 2	Limits
610-39-9	3,4-Dinitrotoluene	95%		70-136%

(a) Analysis performed at Accutest Laboratories, Orlando, FL.

U = Not detected MDL - Method Detection Limit
RL = Reporting Limit
E = Indicates value exceeds calibration range
J = Indicates an estimated value
B = Indicates analyte found in associated method blank
N = Indicates presumptive evidence of a compound

Accutest LabLink@31214 11:30 08-May-2008

Report of Analysis

Client Sample ID:	29WW15		
Lab Sample ID:	T16448-2	**Date Sampled:**	02/24/07
Matrix:	AQ - Ground Water	**Date Received:**	02/26/07
		Percent Solids:	n/a
Project:	Longhorn Army Ammunition Plant		

General Chemistry

Analyte	Result	RL	MDL	Units	DF	Analyzed	By	Method
Total Organic Carbon	4.0	1.0	0.092	mg/l	1	02/27/07 09:10	LN	EPA 415.1/9060

RL = Reporting Limit
MDL = Method Detection Limit

U = Indicates a result < MDL
B = Indicates a result > = MDL but < RL

Accutest LabLink@31214 11:30 08-May-2008

Report of Analysis

Client Sample ID:	12WW24		
Lab Sample ID:	T16448-3	**Date Sampled:**	02/24/07
Matrix:	AQ - Ground Water	**Date Received:**	02/26/07
		Percent Solids:	n/a
Project:	Longhorn Army Ammunition Plant		

Metals Analysis

Analyte	Result	RL	MDL	Units	DF	Prep	Analyzed	By	Method	Prep Method
Chromium	2.0 B	10	1.8	ug/l	1	02/27/07	02/28/07	NS	SW846 6010B [1]	SW846 3010A [2]

(1) Instrument QC Batch: MA2815
(2) Prep QC Batch: MP5804

RL = Reporting Limit
MDL = Method Detection Limit

U = Indicates a result < MDL
B = Indicates a result > = MDL but < RL

Misc. Forms

Custody Documents and Other Forms

Includes the following where applicable:

- Chain of Custody
- LRC Form

00096477
T16448

Shaw® Shaw Environmental, Inc.

3010 Briarpark Drive, Suite 4N
Houston, TX 77042 (713) 996-4400

CHAIN-OF-CUSTODY

No. 10921

Laboratory Name: Accutest
Address: 10165 Harwin Dr. #150 Houston, TX 77036
Contact: Agnes 713-271-4700

Project Name: Longhorn Army Ammunition Plant
Project Location: Karnack, TX
Project No.: 117591
Project Contact: Kay Everette
Project Telephone No.: 713-996-4421
Point of contact: Diane Meyer
Telephone No.: 713-996-4408
Project Manager/Supervisor: Praveen Srivastav

Item No.	Sample Number	Date	Time	Comp	Grab	Matrix	Sample Description, Location	Number of Containers	Analysis and Method Desired (Indicate separate containers): VOCs 8260	Anions 300	Sulfides 376.2	Perchlorate 314	Explosives 8330	Alkalinity 310.1	TOC 415.1	Chromium (Total)	Remarks
1	50WW03	2/24/07	10:46		X	GW	50WW03	13	X	X	X	X	X	X	X	X	
2	29WW15	2/24/07	10:35		X	GW	29WW15	10	X				X	X	X	X	Incomplete Suite
3	12WW24	2/24/07	10:00		X	GW	12WW24	2								X	1 Filtered 1 Unfiltered
4																	
5																	
6																	
7																	
8																	
9																	
10																	

Transfers Relinquished By (Signature)	Date/Time	Transfers Accepted By (Signature)	Date/Time
J. Parker / M. Allen	2/26/07 @ 1800	02.26.07 0910	
		Laboratory	

Special Instructions: Please hold filtered sample pending further instruction. If any ?'s Please call Allen W @ 713 996-4586
FedEx Airbill No.:
Sampler's Signature: J. Parker

TAT: ✓ Standard ____ Rush Due: ____ Seals Intact? ____ Y ____ N Received Good Condition ✓ Y ____ N ✓ Cold 2.3°c

White - Lab Copy Canary - Field Copy Pink - File Copy

4.1 4

T16448: Chain of Custody
Page 1 of 3

00096478

ACCUTEST.

VARIANCE MEMO
SAMPLE LOG-IN

SAMPLE(S) #-50WW03 - 2/24/07 @ 10:46 DATE 2/26/07
PROJECT LHAAP
FILED BY AR LAB NO. T16448

VARIANCE - Check applicable items(s):

_____ Insufficient sample sent for proper analysis; received approx. _____
_____ Sample bottle received broken and/or cap not intact.
_____ Samples received without paperwork; paperwork received without samples.
_____ Samples received without proper refrigeration, when it has been deemed necessary. Temperature at receipt: _____
_____ Illegible sample number or label missing from bottle.
_____ Numbers on sample not the same as numbers on paper work.
_____ Incomplete instructions received with sample(s) ie.,no request for analysis, no chain of custody, incomplete billing instructions, no due date, etc. Temperature at reciept: _____
_____ Samples received in improper container or lacking proper preservation.
_____ Physical characteristics different than those on sampling sheets; Describe: _____
_____ Rush samples on hold because of incomplete paperwork.
_____ Other (specify) _____

Sx. time on containers is 08:56. Time on COC is different. Sx. 1 may be out of hold. Forward to Acped. Sx. 1 was received without an Explosive Container. Sx. 2-The Explosive Container is only half full. May be limited Sx. volume.

CORRECTIVE ACTION TAKEN

Diane M Person Contacted ✓ By phone.
_____ Client informed verbally. _____ Samples processed for information only and noted on report.
_____ Client informed by memo/letter. _____ Samples processed with higher detection limits accepted.
_____ Samples processed as is. _____ Samples rejected.
_____ Samples preserved by lab.
_____ Client will resample and resubmit.

Notes: Sx TIME IS 1046 AS PER COC. NO Explosives NEEDED

Sx#2- LIMITED Sx Volume

ROUTING

TITLE	DATE	INITIALS	CORRECTED?
Sample Manager:			
Login:			
Project Manager:	2/26/A	AVS	
Comments:			

Form: SM006

T16448: Chain of Custody
Page 2 of 3

00096479

ACCUTEST.

SAMPLE RECEIPT LOG

JOB #: T16448 DATE/TIME RECEIVED: 2/26/07 | 09:10

CLIENT: Shaw INITIALS: AR

Condition/Variance (Circle "Y" for yes and "N" for no or NA. If "N" is circled, see variance for explanation):

1. (Y) N Sample received in undamaged condition.
2. (Y) N Samples received within temp. range.
3. (Y) N Sample received with proper pH.
4. (Y) N Sample received in proper containers.
5. Y (N) Sample volume sufficient for analysis.
6. (Y) N Sample received with chain of custody.
7. (Y) N Chain of Custody matches **sample IDs and analysis** on containers.
8. (Y) N Samples Headspace acceptable
9. Y N (NA) Custody seal received intact and tamper not evident on cooler.
10. Y N (NA) Custody seal received intact and tamper not evident on bottles.

SAMPLE or FIELD ID	BOTTLE #	DATE SAMPLED	MATRIX	VOLUME	LOCATION	PRESERV.	PH
1,2	1-3	2/24	AQ	40 ml.	VREF	1,2,3,4,5,6	U, <2, >12, NA
"	4-6	"	"	"	SUB	1,2,3,4,5,6	U, <2, >12, NA
"	7-9	"	"	"	2L	1,2,3,4,5,6	U, <2, >12, NA
1	10-11	"	"	P1000	"	(1),2,3,4,5,6	(U) <2, >12, NA
1	12	"	"	P500	"	(1),2,3,4,5,6	(U) <2, >12, NA
1	13	"	"	"	"	1,2,3,4,(5),6	U,(<2), >12, NA
2	10	"	"	A1000	SUB	(1),2,3,4,5,6	(U) <2, >12, NA
3	1-2	"	"	P500	2L	(1),2,3,4,5,6	(U) <2, >12, NA
						1,2,3,4,5,6	U, <2, >12, NA
						1,2,3,4,5,6	U, <2, >12, NA
						1,2,3,4,5,6	U, <2, >12, NA
						1,2,3,4,5,6	U, <2, >12, NA
						1,2,3,4,5,6	U, <2, >12, NA
						1,2,3,4,5,6	U, <2, >12, NA
						1,2,3,4,5,6	U, <2, >12, NA

AR 2-26-07

LOCATION: WI: Walk-In VR: Volatile Refrig. SUB: Subcontract EF: Encore Freezer

PRESERVATIVES: 1: None 2: HCL 3: HNO3 4: H2SO4 5: NAOH 6: Other

Comments:

~~pH of waters checked excluding volatiles~~

pH of soils N/A

Delivery method: Courier: Client

COOLER TEMP: 2.3 COOLER TEMP:

COOLER TEMP: COOLER TEMP:

Form: SM012, Rev.07/28/06, QAO

T16448: Chain of Custody

Page 3 of 3

Appendix A Laboratory Data Package Cover Page

This data package consists of:

- ☐ This signature page, the laboratory review checklist, and the following reportable data:
- ☐ R1 Field chain-of-custody documentation;
- ☐ R2 Sample identification cross-reference;
- ☐ R3 Test reports (analytical data sheets) for each environmental sample that includes:
  - a) Items consistent with NELAC 5.13 or ISO/IEC 17025 Section 5.10
  - b) dilution factors,
  - c) preparation methods,
  - d) cleanup methods, and
  - e) if required for the project, tentatively identified compounds (TICs).
- ☐ R4 Surrogate recovery data including:
  - a) Calculated recovery (%R), and
  - b) The laboratory's surrogate QC limits.
- ☐ R5 Test reports/summary forms for blank samples;
- ☐ R6 Test reports/summary forms for laboratory control samples (LCSs) including:
  - a) LCS spiking amounts,
  - b) Calculated %R for each analyte, and
  - c) The laboratory's LCS QC limits.
- ☐ R7 Test reports for project matrix spike/matrix spike duplicates (MS/MSDs) including:
  - a) Samples associated with the MS/MSD clearly identified,
  - b) MS/MSD spiking amounts,
  - c) Concentration of each MS/MSD analyte measured in the parent and spiked samples,
  - d) Calculated %Rs and relative percent differences (RPDs), and
  - e) The laboratory's MS/MSD QC limits
- ☐ R8 Laboratory analytical duplicate (if applicable) recovery and precision:
  - a) the amount of analyte measured in the duplicate,
  - b) the calculated RPD, and
  - c) the laboratory's QC limits for analytical duplicates.
- ☐ R9 List of method quantitation limits (MQLs) for each analyte for each method and matrix;
- ☐ R10 Other problems or anomalies.
- ☐ The Exception Report for every "No" or "Not Reviewed (NR)" item in laboratory review checklist.

Release Statement: I am responsible for the release of this laboratory data package. This data package has been reviewed by the laboratory and is complete and technically compliant with the requirements of the methods used, except where noted by the laboratory in the attached exception reports. By me signature below, I affirm to the best of my knowledge, all problems/anomalies, observed by the laboratory as having the potential to affect the quality of the data, have been identified by the laboratory in the Laboratory Review Checklist, and no information or data have been knowingly withheld that would affect the quality of the data.

Check, if applicable: [ ] This laboratory is an in-house laboratory controlled by the person responding to rule. The official signing the cover page of the rule-required report (for example, the APAR) in which these data are used is responsible for releasing this data package and is by signature affirming the above release statement is true.

Ron Martino		Lab Director	3/13/2007
Name (Printed)	Signature	Official Title (printed)	Date

1. Items identified by the letter "R" must be included in the laboratory data package submitted in the TRRP-required report(s). Items identified by the letter "S" should be retained and made available upon request for the appropriate retention period.

Appendix A (cont'd): Laboratory Review Checklist: Reportable Data

Laboratory Name: Accutest Laboratories Gulf Coast	LRC Date: 3/13/2007
Project Name: Longhorn	Laboratory Job Number: T16448
Reviewer Name: Ron Martino	Prep Batch Number(s):

#[1]	A[2]	Description	Yes	No	NA[3]	NR[4]	ER#[5]
		Chain-of-custody (C-O-C)					
R1	OI	Did samples meet the laboratory's standard conditions of sample acceptability upon receipt?	X				
		Were all departures from standard conditions described in an exception report?	X				
R2	OI	**Sample and quality control (QC) identification**					
		Are all field sample ID numbers cross-referenced to the laboratory ID numbers?	X				
		Are all laboratory ID numbers cross-referenced to the corresponding QC data?	X				
R3	OI	**Test reports**					
		Were all samples prepared and analyzed within holding times?	X				
		Other than those results < MQL, were all other raw values bracketed by calibration standards?	X				
		Were calculations checked by a peer or supervisor?	X				
		Were all analyte identifications checked by a peer or supervisor?	X				
		Were sample quantitation limits reported for all analytes not detected?	X				
		Were all results for soil and sediment samples reported on a dry weight basis?			X		
		Were % moisture (or solids) reported for all soil and sediment samples?			X		
		If required for the project, TICs reported?			X		
R4	O	**Surrogate recovery data**					
		Were surrogates added prior to extraction?	X				
		Were surrogate percent recoveries in all samples within the laboratory QC limits?	X				
R5	OI	**Test reports/summary forms for blank samples**					
		Were appropriate type(s) of blanks analyzed?	X				
		Were blanks analyzed at the appropriate frequency?	X				
		Were method blanks taken through the entire analytical process, including preparation and, if applicable, cleanup procedures?	X				
		Were blank concentrations < MQL?	X				
R6	OI	**Laboratory control samples (LCS):**					
		Were all COCs included in the LCS?	X				
		Was each LCS taken through the entire analytical procedure, including prep and cleanup steps?	X				
		Were LCSs analyzed at the required frequency?	X				
		Were LCS (and LCSD, if applicable) %Rs within the laboratory QC limits?	X				
		Does the detectability data document the laboratory's capability to detect the COCs at the MDL used to calculate the SQLs?	X				
		Was the LCSD RPD within QC limits?			X		
R7	OI	**Matrix spike (MS) and matrix spike duplicate (MSD) data**					
		Were the project/method specified analytes included in the MS and MSD?	X				
		Were MS/MSD analyzed at the appropriate frequency?	X				
		Were MS (and MSD, if applicable) %Rs within the laboratory QC limits?		X			2
		Were MS/MSD RPDs within laboratory QC limits?	X				
R8	OI	**Analytical duplicate data**					
		Were appropriate analytical duplicates analyzed for each matrix?	X				
		Were analytical duplicates analyzed at the appropriate frequency?	X				
		Were RPDs or relative standard deviations within the laboratory QC limits?	X				
R9	OI	**Method quantitation limits (MQLs):**					
		Are the MQLs for each method analyte included in the laboratory data package?	X				
		Do the MQLs correspond to the concentration of the lowest non-zero calibration standard?	X				
		Are unadjusted MQLs included in the laboratory data package?	X				
R10	OI	**Other problems/anomalies**					
		Are all known problems/anomalies/special conditions noted in this LRC and ER?	X				
		Were all necessary corrective actions performed for the reported data?	X				

2. = organic analyses; I = inorganic analyses (and general chemistry, when applicable);
3. NA = Not applicable;
4. NR = Not reviewed;
5. ER# = Exception Report identification number (an Exception Report should be completed for an item if "NR" or "No" is checked).

Appendix A (cont'd): Laboratory Review Checklist: Reportable Data

Laboratory Name: Accutest Laboratories Gulf Coast	LRC Date: 3/13/2007
Project Name: Longhorn	Laboratory Job Number: T16448
Reviewer Name: Ron Martino	Prep Batch Number(s):

#[1]	A[2]	Description	Yes	No	NA[3]	NR[4]	ER#[5]
S1	OI	**Initial calibration (ICAL)**					
		Were response factors and/or relative response factors for each analyte within QC limits?	X				
		Were percent RSDs or correlation coefficient criteria met?	X				
		Was the number of standards recommended in the method used for all analytes?	X				
		Were all points generated between the lowest and highest standard used to calculate the curve?	X				
		Are ICAL data available for all instruments used?	X				
		Has the initial calibration curve been verified using an appropriate second source standard?	X				
S2	OI	**Initial and continuing calibration verification (ICCV and CCV) and continuing calibration**					
		Was the CCV analyzed at the method-required frequency?	X				
		Were percent differences for each analyte within the method-required QC limits?	X				
		Was the ICAL curve verified for each analyte?	X				
		Was the absolute value of the analyte concentration in the inorganic CCB < MDL?	X				
S3	O	**Mass spectral tuning:**					
		Was the appropriate compound for the method used for tuning?	X				
		Were ion abundance data within the method-required QC limits?	X				
S4	O	**Internal standards (IS):**					
		Were IS area counts and retention times within the method-required QC limits?	X				
S5	OI	**Raw data (NELAC section 1 appendix A glossary, and section 5.12 or ISO/IEC 17025 section**					
		Were the raw data (for example, chromatograms, spectral data) reviewed by an analyst?	X				
		Were data associated with manual integrations flagged on the raw data?	X				
S6	O	**Dual column confirmation**					
		Did dual column confirmation results meet the method-required QC?			X		
S7	O	**Tentatively identified compounds (TICs):**					
		If TICs were requested, were the mass spectra and TIC data subject to appropriate checks?			X		
S8	I	**Interference Check Sample (ICS) results:**					
		Were percent recoveries within method QC limits?			X		
	I	**Serial dilutions, post digestion spikes, and method of standard additions**					
		Were percent differences, recoveries, and the linearity within the QC limits specified in the method?			X		
S10	OI	**Method detection limit (MDL) studies**					
		Was a MDL study performed for each reported analyte?	X				
		Is the MDL either adjusted or supported by the analysis of DCSs?	X				
S11	OI	**Proficiency test reports:**					
		Was the laboratory's performance acceptable on the applicable proficiency tests or evaluation studies?	X				
S12	OI	**Standards documentation**					
		Are all standards used in the analyses NIST-traceable or obtained from other appropriate sources?	X				
S13	OI	**Compound/analyte identification procedures**					
		Are the procedures for compound/analyte identification documented?	X				
S14	OI	**Demonstration of analyst competency (DOC)**					
		Was DOC conducted consistent with NELAC Chapter 5C or ISO/IEC 4?	X				
		Is documentation of the analyst's competency up-to-date and on file?	X				
S15	OI	**Verification/validation documentation for methods** (NELAC Chap 5 or ISO/IEC 17025 Section 5)					
		Are all the methods used to generate the data documented, verified, and validated, where applicable?	X				
S16	OI	**Laboratory standard operating procedures (SOPs):**					
		Are laboratory SOPs current and on file for each method performed?	X				

1 Items identified by the letter "R" should be included in the laboratory data package submitted to the TCEQ in the TRRP-required report(s). Items identified by the letter "S" should be retained and made available upon request for the appropriate retention period.
2 O = organic analyses; I = inorganic analyses (and general chemistry, when applicable).
3 NA = Not applicable.
4 NR = Not Reviewed.
5 ER# = Exception Report identification number (an Exception Report should be completed for an item if "NR" or "No" is checked).

Appendix A (cont'd): Laboratory Review Checklist: Exception Reports	
Laboratory Name: Accutest Laboratories Gulf Coast	LRC Date: 3/13/2007
Project Name: Longhorn	Laboratory Job Number: T16448
Reviewer Name: Ron Martino	Prep Batch Number(s):

ER #[1]	DESCRIPTION
1	For reporting purposes, the MQL is defined in the report as the RL. The unadjusted MQL/RL is reported in the method blank. The SQL/MDL is defined in the report as the MDL.
2	All anomalies are discussed in the case narrative.

ER# = Exception Report identification number (an Exception Report should be completed for an item if "NR" or "No" is checked on the LRC)

GC/MS Volatiles

QC Data Summaries

Includes the following where applicable:

- Method Blank Summaries
- Blank Spike Summaries
- Matrix Spike and Duplicate Summaries
- Instrument Performance Checks (BFB)
- Internal Standard Area Summaries
- Surrogate Recovery Summaries
- Initial and Continuing Calibration Summaries

Method Blank Summary

Job Number: T16448
Account: ITTXHO Shaw E & I, Inc.
Project: Longhorn Army Ammunition Plant

Sample	File ID	DF	Analyzed	By	Prep Date	Prep Batch	Analytical Batch
VF2315-MB	F0079184.D	1	03/07/07	LJ	n/a	n/a	VF2315

The QC reported here applies to the following samples: **Method:** SW846 8260B

T16448-1, T16448-2

CAS No.	Compound	Result	RL	MDL	Units	Q
67-64-1	Acetone	ND	50	2.8	ug/l	
71-43-2	Benzene	ND	2.0	0.23	ug/l	
75-27-4	Bromodichloromethane	ND	2.0	0.33	ug/l	
75-25-2	Bromoform	ND	2.0	0.65	ug/l	
108-90-7	Chlorobenzene	ND	2.0	0.54	ug/l	
75-00-3	Chloroethane	ND	2.0	0.46	ug/l	
67-66-3	Chloroform	ND	2.0	0.66	ug/l	
75-15-0	Carbon disulfide	ND	2.0	0.62	ug/l	
56-23-5	Carbon tetrachloride	ND	2.0	0.52	ug/l	
75-34-3	1,1-Dichloroethane	ND	2.0	0.52	ug/l	
75-35-4	1,1-Dichloroethylene	ND	2.0	0.68	ug/l	
107-06-2	1,2-Dichloroethane	ND	2.0	0.53	ug/l	
78-87-5	1,2-Dichloropropane	ND	2.0	0.59	ug/l	
124-48-1	Dibromochloromethane	ND	2.0	0.68	ug/l	
156-59-2	cis-1,2-Dichloroethylene	ND	2.0	0.83	ug/l	
10061-01-5	cis-1,3-Dichloropropene	ND	2.0	0.59	ug/l	
156-60-5	trans-1,2-Dichloroethylene	ND	2.0	0.75	ug/l	
10061-02-6	trans-1,3-Dichloropropene	ND	2.0	0.61	ug/l	
100-41-4	Ethylbenzene	ND	2.0	0.48	ug/l	
591-78-6	2-Hexanone	ND	10	1.9	ug/l	
108-10-1	4-Methyl-2-pentanone	ND	10	7.3	ug/l	
74-83-9	Methyl bromide	ND	2.0	0.47	ug/l	
74-87-3	Methyl chloride	ND	2.0	0.60	ug/l	
75-09-2	Methylene chloride	ND	5.0	0.67	ug/l	
78-93-3	Methyl ethyl ketone	ND	10	3.0	ug/l	
100-42-5	Styrene	ND	2.0	0.50	ug/l	
71-55-6	1,1,1-Trichloroethane	ND	2.0	0.37	ug/l	
79-34-5	1,1,2,2-Tetrachloroethane	ND	2.0	0.46	ug/l	
79-00-5	1,1,2-Trichloroethane	ND	2.0	0.66	ug/l	
127-18-4	Tetrachloroethylene	ND	2.0	0.74	ug/l	
108-88-3	Toluene	ND	2.0	0.54	ug/l	
79-01-6	Trichloroethylene	ND	2.0	0.63	ug/l	
75-01-4	Vinyl chloride	ND	2.0	0.32	ug/l	
1330-20-7	Xylene (total)	ND	6.0	1.1	ug/l	

Method Blank Summary

Job Number: T16448
Account: ITTXHO Shaw E & I, Inc.
Project: Longhorn Army Ammunition Plant

Sample	File ID	DF	Analyzed	By	Prep Date	Prep Batch	Analytical Batch
VF2315-MB	F0079184.D	1	03/07/07	LJ	n/a	n/a	VF2315

The QC reported here applies to the following samples: **Method:** SW846 8260B

T16448-1, T16448-2

CAS No.	Surrogate Recoveries		Limits
1868-53-7	Dibromofluoromethane	103%	73-139%
17060-07-0	1,2-Dichloroethane-D4	98%	66-139%
2037-26-5	Toluene-D8	109%	77-148%
460-00-4	4-Bromofluorobenzene	129%	84-150%

Method Blank Summary

Job Number: T16448
Account: ITTXHO Shaw E & I, Inc.
Project: Longhorn Army Ammunition Plant

Sample	File ID	DF	Analyzed	By	Prep Date	Prep Batch	Analytical Batch
VF2318-MB	F0079225.D	1	03/08/07	LJ	n/a	n/a	VF2318

The QC reported here applies to the following samples: **Method:** SW846 8260B

T16448-2

CAS No.	Compound	Result	RL	MDL	Units	Q
107-06-2	1,2-Dichloroethane	ND	2.0	0.53	ug/l	
79-01-6	Trichloroethylene	ND	2.0	0.63	ug/l	

CAS No.	Surrogate Recoveries		Limits
1868-53-7	Dibromofluoromethane	103%	73-139%
17060-07-0	1,2-Dichloroethane-D4	97%	66-139%
2037-26-5	Toluene-D8	108%	77-148%
460-00-4	4-Bromofluorobenzene	121%	84-150%

Blank Spike Summary

Job Number: T16448
Account: ITTXHO Shaw E & I, Inc.
Project: Longhorn Army Ammunition Plant

Sample	File ID	DF	Analyzed	By	Prep Date	Prep Batch	Analytical Batch
VF2315-BS	F0079183.D	1	03/07/07	LJ	n/a	n/a	VF2315

The QC reported here applies to the following samples: **Method:** SW846 8260B

T16448-1, T16448-2

CAS No.	Compound	Spike ug/l	BSP ug/l	BSP %	Limits
67-64-1	Acetone	125	103	82	31-158
71-43-2	Benzene	25	25.1	100	67-118
75-27-4	Bromodichloromethane	25	23.8	95	66-115
75-25-2	Bromoform	25	22.2	89	57-119
108-90-7	Chlorobenzene	25	24.3	97	72-116
75-00-3	Chloroethane	25	26.6	106	61-135
67-66-3	Chloroform	25	25.7	103	66-117
75-15-0	Carbon disulfide	25	21.7	87	39-136
56-23-5	Carbon tetrachloride	25	27.6	110	67-131
75-34-3	1,1-Dichloroethane	25	26.2	105	63-125
75-35-4	1,1-Dichloroethylene	25	25.4	102	52-143
107-06-2	1,2-Dichloroethane	25	24.1	96	61-120
78-87-5	1,2-Dichloropropane	25	25.2	101	64-118
124-48-1	Dibromochloromethane	25	22.4	90	67-117
156-59-2	cis-1,2-Dichloroethylene	25	24.3	97	65-116
10061-01-5	cis-1,3-Dichloropropene	25	25.0	100	67-118
156-60-5	trans-1,2-Dichloroethylene	25	25.2	101	66-128
10061-02-6	trans-1,3-Dichloropropene	25	24.7	99	73-126
100-41-4	Ethylbenzene	25	23.9	96	71-119
591-78-6	2-Hexanone	125	101	81	45-132
108-10-1	4-Methyl-2-pentanone	125	111	89	46-127
74-83-9	Methyl bromide	25	23.0	92	51-126
74-87-3	Methyl chloride	25	23.0	92	47-130
75-09-2	Methylene chloride	25	23.5	94	53-130
78-93-3	Methyl ethyl ketone	125	107	86	47-128
100-42-5	Styrene	25	20.0	80	69-115
71-55-6	1,1,1-Trichloroethane	25	26.2	105	67-128
79-34-5	1,1,2,2-Tetrachloroethane	25	21.4	86	57-121
79-00-5	1,1,2-Trichloroethane	25	22.9	92	62-117
127-18-4	Tetrachloroethylene	25	26.4	106	72-128
108-88-3	Toluene	25	24.3	97	70-121
79-01-6	Trichloroethylene	25	26.1	104	69-120
75-01-4	Vinyl chloride	25	25.2	101	59-145
1330-20-7	Xylene (total)	75	74.2	99	72-120

Blank Spike Summary

Job Number: T16448
Account: ITTXHO Shaw E & I, Inc.
Project: Longhorn Army Ammunition Plant

Sample	File ID	DF	Analyzed	By	Prep Date	Prep Batch	Analytical Batch
VF2315-BS	F0079183.D	1	03/07/07	LJ	n/a	n/a	VF2315

The QC reported here applies to the following samples: **Method:** SW846 8260B

T16448-1, T16448-2

CAS No.	Surrogate Recoveries	BSP	Limits
1868-53-7	Dibromofluoromethane	104%	73-139%
17060-07-0	1,2-Dichloroethane-D4	101%	66-139%
2037-26-5	Toluene-D8	102%	77-148%
460-00-4	4-Bromofluorobenzene	99%	84-150%

Blank Spike Summary

Job Number: T16448
Account: ITTXHO Shaw E & I, Inc.
Project: Longhorn Army Ammunition Plant

Sample	File ID	DF	Analyzed	By	Prep Date	Prep Batch	Analytical Batch
VF2318-BS	F0079224.D	1	03/08/07	LJ	n/a	n/a	VF2318

The QC reported here applies to the following samples: **Method:** SW846 8260B

T16448-2

CAS No.	Compound	Spike ug/l	BSP ug/l	BSP %	Limits
107-06-2	1,2-Dichloroethane	25	22.7	91	61-120
79-01-6	Trichloroethylene	25	25.5	102	69-120

CAS No.	Surrogate Recoveries	BSP	Limits
1868-53-7	Dibromofluoromethane	106%	73-139%
17060-07-0	1,2-Dichloroethane-D4	97%	66-139%
2037-26-5	Toluene-D8	103%	77-148%
460-00-4	4-Bromofluorobenzene	101%	84-150%

Matrix Spike/Matrix Spike Duplicate Summary

Job Number: T16448
Account: ITTXHO Shaw E & I, Inc.
Project: Longhorn Army Ammunition Plant

Sample	File ID	DF	Analyzed	By	Prep Date	Prep Batch	Analytical Batch
T16445-3MS	F0079191.D	1	03/07/07	LJ	n/a	n/a	VF2315
T16445-3MSD	F0079192.D	1	03/07/07	LJ	n/a	n/a	VF2315
T16445-3 [a]	F0079190.D	1	03/07/07	LJ	n/a	n/a	VF2315

The QC reported here applies to the following samples: **Method:** SW846 8260B

T16448-1, T16448-2

CAS No.	Compound	T16445-3 ug/l	Q	Spike ug/l	MS ug/l	MS %	MSD ug/l	MSD %	RPD	Limits Rec/RPD
67-64-1	Acetone	50 U		125	103	82	98.2	79	5	39-130/26
71-43-2	Benzene	2.0 U		25	23.6	94	24.0	96	2	65-122/15
75-27-4	Bromodichloromethane	2.0 U		25	22.5	90	22.3	89	1	64-119/22
75-25-2	Bromoform	2.0 U		25	20.5	82	20.7	83	1	50-123/28
108-90-7	Chlorobenzene	2.0 U		25	22.8	91	23.3	93	2	72-118/20
75-00-3	Chloroethane	2.0 U		25	24.6	98	23.8	95	3	60-136/25
67-66-3	Chloroform	2.0 U		25	24.9	100	25.4	102	2	65-120/20
75-15-0	Carbon disulfide	2.0 U		25	20.2	81	19.9	80	1	37-140/24
56-23-5	Carbon tetrachloride	2.0 U		25	25.6	102	25.8	103	1	64-135/23
75-34-3	1,1-Dichloroethane	2.0		25	27.3	101	26.7	99	2	65-126/21
75-35-4	1,1-Dichloroethylene	10.9		25	34.9	96	33.5	90	4	55-140/25
107-06-2	1,2-Dichloroethane	2.0		25	24.5	90	24.1	88	2	57-125/25
78-87-5	1,2-Dichloropropane	2.0 U		25	23.2	93	24.2	97	4	63-121/22
124-48-1	Dibromochloromethane	2.0 U		25	21.4	86	22.0	88	3	60-123/23
156-59-2	cis-1,2-Dichloroethylene	699	E	25	685	-56* [b]	690	-36* [b]	1	62-120/24
10061-01-5	cis-1,3-Dichloropropene	2.0 U		25	23.5	94	23.8	95	1	61-119/23
156-60-5	trans-1,2-Dichloroethylene	2.1		25	26.1	96	26.0	96	0	64-130/22
10061-02-6	trans-1,3-Dichloropropene	2.0 U		25	24.4	98	24.1	96	1	65-129/23
100-41-4	Ethylbenzene	2.0 U		25	22.8	91	23.5	94	3	70-123/18
591-78-6	2-Hexanone	10 U		125	105	84	101	81	4	41-137/27
108-10-1	4-Methyl-2-pentanone	10 U		125	114	91	110	88	4	41-133/22
74-83-9	Methyl bromide	2.0 U		25	21.6	86	20.8	83	4	47-129/27
74-87-3	Methyl chloride	2.0 U		25	23.2	93	22.1	88	5	45-133/24
75-09-2	Methylene chloride	5.0 U		25	22.8	91	22.5	90	1	49-128/21
78-93-3	Methyl ethyl ketone	10 U		125	108	86	105	84	3	43-125/29
100-42-5	Styrene	2.0 U		25	18.9	76	19.0	76	1	65-120/21
71-55-6	1,1,1-Trichloroethane	2.0 U		25	25.2	101	24.8	99	2	68-131/21
79-34-5	1,1,2,2-Tetrachloroethane	2.0 U		25	20.8	83	21.4	86	3	50-128/22
79-00-5	1,1,2-Trichloroethane	1.7	J	25	23.7	88	24.0	89	1	58-120/22
127-18-4	Tetrachloroethylene	83.1		25	107	96	106	92	1	69-132/21
108-88-3	Toluene	2.0 U		25	22.8	91	23.4	94	3	70-123/18
79-01-6	Trichloroethylene	6520	E	25	6200	-1280* [b]	6140	-1520* [b]	1	70-120/19
75-01-4	Vinyl chloride	3.8		25	28.3	98	27.1	93	4	51-147/24
1330-20-7	Xylene (total)	6.0 U		75	69.8	93	70.7	94	1	71-122/16

Matrix Spike/Matrix Spike Duplicate Summary

Job Number: T16448
Account: ITTXHO Shaw E & I, Inc.
Project: Longhorn Army Ammunition Plant

Sample	File ID	DF	Analyzed	By	Prep Date	Prep Batch	Analytical Batch
T16445-3MS	F0079191.D	1	03/07/07	LJ	n/a	n/a	VF2315
T16445-3MSD	F0079192.D	1	03/07/07	LJ	n/a	n/a	VF2315
T16445-3 [a]	F0079190.D	1	03/07/07	LJ	n/a	n/a	VF2315

The QC reported here applies to the following samples: **Method:** SW846 8260B

T16448-1, T16448-2

CAS No.	Surrogate Recoveries	MS	MSD	T16445-3	Limits
1868-53-7	Dibromofluoromethane	106%	107%	106%	73-139%
17060-07-0	1,2-Dichloroethane-D4	106%	107%	106%	66-139%
2037-26-5	Toluene-D8	101%	104%	102%	77-148%
460-00-4	4-Bromofluorobenzene	99%	103%	123%	84-150%

(a) For QC only.
(b) Outside control limits due to high level in sample relative to spike amount.

Matrix Spike/Matrix Spike Duplicate Summary

Job Number: T16448
Account: ITTXHO Shaw E & I, Inc.
Project: Longhorn Army Ammunition Plant

Sample	File ID	DF	Analyzed	By	Prep Date	Prep Batch	Analytical Batch
T16445-4MS	F0079227.D	1	03/08/07	LJ	n/a	n/a	VF2318
T16445-4MSD	F0079228.D	1	03/08/07	LJ	n/a	n/a	VF2318
T16445-4	F0079226.D	1	03/08/07	LJ	n/a	n/a	VF2318

The QC reported here applies to the following samples: **Method:** SW846 8260B

T16448-2

CAS No.	Compound	T16445-4 ug/l	Q	Spike ug/l	MS ug/l	MS %	MSD ug/l	MSD %	RPD	Limits Rec/RPD
107-06-2	1,2-Dichloroethane	2.0	U	25	23.0	92	22.6	90	2	57-125/25
79-01-6	Trichloroethylene	2.0		25	26.3	97	25.9	96	2	70-120/19

CAS No.	Surrogate Recoveries	MS	MSD	T16445-4	Limits
1868-53-7	Dibromofluoromethane	106%	105%	102%	73-139%
17060-07-0	1,2-Dichloroethane-D4	104%	102%	98%	66-139%
2037-26-5	Toluene-D8	103%	105%	106%	77-148%
460-00-4	4-Bromofluorobenzene	99%	99%	119%	84-150%

Instrument Performance Check (BFB)

Job Number: T16448
Account: ITTXHO Shaw E & I, Inc.
Project: Longhorn Army Ammunition Plant

Sample: VF2305-BFB
Lab File ID: F0078963.D
Instrument ID: GCMSF
Injection Date: 02/28/07
Injection Time: 14:36

m/e	Ion Abundance Criteria	Raw Abundance	% Relative Abundance		Pass/Fail
50	15.0 - 40.0% of mass 95	7281	16.0		Pass
75	30.0 - 60.0% of mass 95	18364	40.3		Pass
95	Base peak, 100% relative abundance	45541	100.0		Pass
96	5.0 - 9.0% of mass 95	2793	6.1		Pass
173	Less than 2.0% of mass 174	107	0.23	(0.27) [a]	Pass
174	50.0 - 100.0% of mass 95	39123	85.9		Pass
175	5.0 - 9.0% of mass 174	3023	6.6	(7.7) [a]	Pass
176	95.0 - 101.0% of mass 174	37355	82.0	(95.5) [a]	Pass
177	5.0 - 9.0% of mass 176	2802	6.2	(7.5) [b]	Pass

(a) Value is % of mass 174
(b) Value is % of mass 176

This check applies to the following Samples, MS, MSD, Blanks, and Standards:

Lab Sample ID	Lab File ID	Date Analyzed	Time Analyzed	Hours Lapsed	Client Sample ID
VF2305-IC2305	F0078964.D	02/28/07	15:10	00:34	Initial cal 2
VF2305-IC2305	F0078965.D	02/28/07	15:41	01:05	Initial cal 5
VF2305-IC2305	F0078966.D	02/28/07	16:12	01:36	Initial cal 20
VF2305-ICC2305	F0078967.D	02/28/07	16:44	02:08	Initial cal 40
VF2305-IC2305	F0078968.D	02/28/07	17:16	02:40	Initial cal 70
VF2305-IC2305	F0078969.D	02/28/07	17:46	03:10	Initial cal 100
VF2305-IC2305	F0078970.D	02/28/07	18:18	03:42	Initial cal 200
VF2305-BS	F0078972.D	02/28/07	19:21	04:45	Blank Spike
VF2305-MB	F0078974.D	02/28/07	20:24	05:48	Method Blank
ZZZZZZ	F0078975.D	02/28/07	20:55	06:19	(unrelated sample)
ZZZZZZ	F0078976.D	02/28/07	21:26	06:50	(unrelated sample)
ZZZZZZ	F0078977.D	02/28/07	21:58	07:22	(unrelated sample)
T16395-2	F0078978.D	02/28/07	22:30	07:54	(used for QC only; not part of job T16448)
T16395-2MS	F0078979.D	02/28/07	23:00	08:24	Matrix Spike
T16395-2MSD	F0078980.D	02/28/07	23:32	08:56	Matrix Spike Duplicate
ZZZZZZ	F0078981.D	03/01/07	00:03	09:27	(unrelated sample)
ZZZZZZ	F0078982.D	03/01/07	00:35	09:59	(unrelated sample)
ZZZZZZ	F0078983.D	03/01/07	01:06	10:30	(unrelated sample)
ZZZZZZ	F0078984.D	03/01/07	01:38	11:02	(unrelated sample)
ZZZZZZ	F0078989.D	03/01/07	04:15	13:39	(unrelated sample)
ZZZZZZ	F0078990.D	03/01/07	04:47	14:11	(unrelated sample)
ZZZZZZ	F0078991.D	03/01/07	05:19	14:43	(unrelated sample)
ZZZZZZ	F0078992.D	03/01/07	05:50	15:14	(unrelated sample)

Instrument Performance Check (BFB)

Job Number: T16448
Account: ITTXHO Shaw E & I, Inc.
Project: Longhorn Army Ammunition Plant

Sample: VF2315-BFB
Lab File ID: F0079181.D
Instrument ID: GCMSF
Injection Date: 03/07/07
Injection Time: 12:44

m/e	Ion Abundance Criteria	Raw Abundance	% Relative Abundance		Pass/Fail
50	15.0 - 40.0% of mass 95	7668	19.2		Pass
75	30.0 - 60.0% of mass 95	16756	42.0		Pass
95	Base peak, 100% relative abundance	39853	100.0		Pass
96	5.0 - 9.0% of mass 95	2768	6.9		Pass
173	Less than 2.0% of mass 174	96	0.24	(0.28) [a]	Pass
174	50.0 - 100.0% of mass 95	34109	85.6		Pass
175	5.0 - 9.0% of mass 174	2473	6.2	(7.3) [a]	Pass
176	95.0 - 101.0% of mass 174	33421	83.9	(98.0) [a]	Pass
177	5.0 - 9.0% of mass 176	2339	5.9	(7.0) [b]	Pass

(a) Value is % of mass 174
(b) Value is % of mass 176

This check applies to the following Samples, MS, MSD, Blanks, and Standards:

Lab Sample ID	Lab File ID	Date Analyzed	Time Analyzed	Hours Lapsed	Client Sample ID
VF2315-CC2305	F0079182.D	03/07/07	13:19	00:35	Continuing cal 40
VF2315-BS	F0079183.D	03/07/07	13:54	01:10	Blank Spike
VF2315-MB	F0079184.D	03/07/07	14:26	01:42	Method Blank
ZZZZZZ	F0079185.D	03/07/07	14:58	02:14	(unrelated sample)
ZZZZZZ	F0079186.D	03/07/07	15:28	02:44	(unrelated sample)
ZZZZZZ	F0079187.D	03/07/07	15:59	03:15	(unrelated sample)
T16448-1	F0079188.D	03/07/07	16:30	03:46	50WW03
T16448-2	F0079189.D	03/07/07	17:01	04:17	29WW15
T16445-3	F0079190.D	03/07/07	17:32	04:48	(used for QC only; not part of job T16448)
T16445-3MS	F0079191.D	03/07/07	18:04	05:20	Matrix Spike
T16445-3MSD	F0079192.D	03/07/07	18:35	05:51	Matrix Spike Duplicate
ZZZZZZ	F0079194.D	03/07/07	19:38	06:54	(unrelated sample)
ZZZZZZ	F0079196.D	03/07/07	20:41	07:57	(unrelated sample)
ZZZZZZ	F0079197.D	03/07/07	21:12	08:28	(unrelated sample)
ZZZZZZ	F0079198.D	03/07/07	21:44	09:00	(unrelated sample)
ZZZZZZ	F0079199.D	03/07/07	22:15	09:31	(unrelated sample)
ZZZZZZ	F0079202.D	03/07/07	23:49	11:05	(unrelated sample)
ZZZZZZ	F0079203.D	03/08/07	00:20	11:36	(unrelated sample)

Instrument Performance Check (BFB)

Job Number: T16448
Account: ITTXHO Shaw E & I, Inc.
Project: Longhorn Army Ammunition Plant

Sample: VF2318-BFB
Lab File ID: F0079222.D
Instrument ID: GCMSF
Injection Date: 03/08/07
Injection Time: 10:25

m/e	Ion Abundance Criteria	Raw Abundance	% Relative Abundance		Pass/Fail
50	15.0 - 40.0% of mass 95	6198	16.4		Pass
75	30.0 - 60.0% of mass 95	15579	41.3		Pass
95	Base peak, 100% relative abundance	37709	100.0		Pass
96	5.0 - 9.0% of mass 95	2320	6.2		Pass
173	Less than 2.0% of mass 174	83	0.22	(0.26) [a]	Pass
174	50.0 - 100.0% of mass 95	32211	85.4		Pass
175	5.0 - 9.0% of mass 174	2369	6.3	(7.4) [a]	Pass
176	95.0 - 101.0% of mass 174	31824	84.4	(98.8) [a]	Pass
177	5.0 - 9.0% of mass 176	2216	5.9	(7.0) [b]	Pass

(a) Value is % of mass 174
(b) Value is % of mass 176

This check applies to the following Samples, MS, MSD, Blanks, and Standards:

Lab Sample ID	Lab File ID	Date Analyzed	Time Analyzed	Hours Lapsed	Client Sample ID
VF2318-CC2305	F0079223.D	03/08/07	10:59	00:34	Continuing cal 40
VF2318-BS	F0079224.D	03/08/07	11:33	01:08	Blank Spike
VF2318-MB	F0079225.D	03/08/07	12:05	01:40	Method Blank
T16445-4	F0079226.D	03/08/07	12:37	02:12	(used for QC only; not part of job T16448)
T16445-4MS	F0079227.D	03/08/07	13:09	02:44	Matrix Spike
T16445-4MSD	F0079228.D	03/08/07	14:05	03:40	Matrix Spike Duplicate
ZZZZZZ	F0079229.D	03/08/07	14:36	04:11	(unrelated sample)
ZZZZZZ	F0079230.D	03/08/07	15:08	04:43	(unrelated sample)
ZZZZZZ	F0079231.D	03/08/07	15:39	05:14	(unrelated sample)
ZZZZZZ	F0079232.D	03/08/07	16:11	05:46	(unrelated sample)
ZZZZZZ	F0079233.D	03/08/07	16:42	06:17	(unrelated sample)
ZZZZZZ	F0079234.D	03/08/07	17:14	06:49	(unrelated sample)
ZZZZZZ	F0079235.D	03/08/07	17:45	07:20	(unrelated sample)
ZZZZZZ	F0079236.D	03/08/07	18:17	07:52	(unrelated sample)
ZZZZZZ	F0079237.D	03/08/07	18:49	08:24	(unrelated sample)
ZZZZZZ	F0079238.D	03/08/07	19:21	08:56	(unrelated sample)
T16448-2	F0079239.D	03/08/07	19:53	09:28	29WW15
ZZZZZZ	F0079240.D	03/08/07	20:24	09:59	(unrelated sample)
ZZZZZZ	F0079241.D	03/08/07	20:56	10:31	(unrelated sample)
ZZZZZZ	F0079242.D	03/08/07	21:28	11:03	(unrelated sample)
ZZZZZZ	F0079243.D	03/08/07	22:00	11:35	(unrelated sample)

Volatile Internal Standard Area Summary

Job Number: T16448
Account: ITTXHO Shaw E & I, Inc.
Project: Longhorn Army Ammunition Plant

Check Std: VF2315-CC2305 **Injection Date:** 03/07/07
Lab File ID: F0079182.D **Injection Time:** 13:19
Instrument ID: GCMSF **Method:** SW846 8260B

	IS 1 AREA	RT	IS 2 AREA	RT	IS 3 AREA	RT
Check Std	698014	11.87	549946	15.95	231402	19.21
Upper Limit [a]	1396028	12.37	1099892	16.45	462804	19.71
Lower Limit [b]	349007	11.37	274973	15.45	115701	18.71

Lab Sample ID	IS 1 AREA	RT	IS 2 AREA	RT	IS 3 AREA	RT
VF2315-BS	751267	11.87	582464	15.95	220558	19.22
VF2315-MB	739731	11.88	521309	15.96	135288	19.23
ZZZZZZ	709635	11.88	498169	15.96	130636	19.23
ZZZZZZ	713511	11.89	505249	15.96	133789	19.22
ZZZZZZ	670598	11.89	482656	15.97	127882	19.23
T16448-1	692002	11.89	498481	15.96	134149	19.23
T16448-2	694603	11.89	509623	15.97	139087	19.23
T16445-3	692901	11.89	523917	15.96	140544	19.22
T16445-3MS	703380	11.89	542581	15.97	203275	19.23
T16445-3MSD	721789	11.88	551007	15.96	199926	19.23
ZZZZZZ	701179	11.88	509297	15.96	124874	19.22
ZZZZZZ	672132	11.88	483654	15.95	147428	19.22
ZZZZZZ	655210	11.87	474247	15.95	142235	19.21
ZZZZZZ	658250	11.88	479882	15.95	141112	19.22
ZZZZZZ	645297	11.88	465709	15.95	134763	19.22
ZZZZZZ	633357	11.87	461754	15.95	129759	19.21
ZZZZZZ	630021	11.88	455820	15.95	129210	19.21

IS 1 = Fluorobenzene
IS 2 = Chlorobenzene-D5
IS 3 = 1,4-Dichlorobenzene-d4

(a) Upper Limit = + 100% of check standard area; Retention time + 0.5 minutes.
(b) Lower Limit = -50% of check standard area; Retention time -0.5 minutes.

Volatile Internal Standard Area Summary

Job Number: T16448
Account: ITTXHO Shaw E & I, Inc.
Project: Longhorn Army Ammunition Plant

Check Std:	VF2318-CC2305	**Injection Date:**	03/08/07
Lab File ID:	F0079223.D	**Injection Time:**	10:59
Instrument ID:	GCMSF	**Method:**	SW846 8260B

	IS 1 AREA	RT	IS 2 AREA	RT	IS 3 AREA	RT
Check Std	698975	11.87	551152	15.94	223338	19.21
Upper Limit [a]	1397950	12.37	1102304	16.44	446676	19.71
Lower Limit [b]	349488	11.37	275576	15.44	111669	18.71

Lab Sample ID	IS 1 AREA	RT	IS 2 AREA	RT	IS 3 AREA	RT
VF2318-BS	746410	11.87	580582	15.94	210100	19.21
VF2318-MB	745444	11.88	531800	15.96	140552	19.22
T16445-4	739935	11.88	531107	15.96	143733	19.22
T16445-4MS	707673	11.88	540763	15.95	204404	19.22
T16445-4MSD	763469	11.88	578582	15.95	218177	19.22
ZZZZZZ	721619	11.89	534862	15.97	175880	19.23
ZZZZZZ	648782	11.89	490210	15.97	162557	19.23
ZZZZZZ	701074	11.89	520078	15.96	161875	19.23
ZZZZZZ	671762	11.90	510964	15.97	157114	19.24
ZZZZZZ	661266	11.89	484654	15.96	144861	19.24
ZZZZZZ	650121	11.89	473895	15.97	134032	19.23
ZZZZZZ	642529	11.89	461686	15.97	128039	19.23
ZZZZZZ	627515	11.89	448085	15.96	125224	19.23
ZZZZZZ	623811	11.88	456759	15.96	122979	19.22
ZZZZZZ	620723	11.89	447599	15.96	114685	19.22
T16448-2	612552	11.89	445736	15.96	121452	19.23
ZZZZZZ	570298	11.88	412673	15.95	110551*	19.22
ZZZZZZ	579619	11.87	421291	15.95	109077*	19.22
ZZZZZZ	599201	11.87	424322	15.95	107464*	19.21
ZZZZZZ	591981	11.87	425080	15.95	108784*	19.21

IS 1 = Fluorobenzene
IS 2 = Chlorobenzene-D5
IS 3 = 1,4-Dichlorobenzene-d4

(a) Upper Limit = + 100% of check standard area; Retention time + 0.5 minutes.
(b) Lower Limit = -50% of check standard area; Retention time -0.5 minutes.

Volatile Surrogate Recovery Summary

Job Number: T16448
Account: ITTXHO Shaw E & I, Inc.
Project: Longhorn Army Ammunition Plant

Method: SW846 8260B **Matrix:** AQ

Samples and QC shown here apply to the above method

Lab Sample ID	Lab File ID	S1	S2	S3	S4
T16448-1	F0079188.D	106.0	102.0	106.0	121.0
T16448-2	F0079239.D	106.0	100.0	105.0	118.0
T16448-2	F0079189.D	108.0	105.0	106.0	122.0
T16445-3MS	F0079191.D	106.0	106.0	101.0	99.0
T16445-3MSD	F0079192.D	107.0	107.0	104.0	103.0
T16445-4MS	F0079227.D	106.0	104.0	103.0	99.0
T16445-4MSD	F0079228.D	105.0	102.0	105.0	99.0
VF2315-BS	F0079183.D	104.0	101.0	102.0	99.0
VF2315-MB	F0079184.D	103.0	98.0	109.0	129.0
VF2318-BS	F0079224.D	106.0	97.0	103.0	101.0
VF2318-MB	F0079225.D	103.0	97.0	108.0	121.0

Surrogate Compounds	Recovery Limits
S1 = Dibromofluoromethane	73-139%
S2 = 1,2-Dichloroethane-D4	66-139%
S3 = Toluene-D8	77-148%
S4 = 4-Bromofluorobenzene	84-150%

Initial Calibration Summary

Job Number: T16448
Account: ITTXHO Shaw E & I, Inc.
Project: Longhorn Army Ammunition Plant

Sample: VF2305-ICC2305
Lab FileID: F0078967.D

Response Factor Report GC/MS F

Method : C:\HPCHEM\1\METHODS\VF2305C.M (RTE Integrator)
Title : SW846 8260B and EPA 624
Last Update : Thu Mar 01 07:31:12 2007
Response via : Initial Calibration

Calibration Files
1 =F0078964.D 2 =F0078965.D 3 =F0078966.D
4 =F0078967.D 5 =F0078968.D 6 =F0078969.D 7 =F0078970.D

	Compound	1	2	3	4	5	6	7	Avg	%RSD
1) I	Fluorobenzene	ISTD								
2)	Dichlorodifluorom	0.157	0.162	0.153	0.171	0.181	0.178	0.196	0.171	8.89
3)P	Chloromethane	0.353	0.368	0.326	0.309	0.319	0.297	0.331	0.329	7.50
4)C	Vinyl Chloride	0.279	0.316	0.268	0.280	0.287	0.269	0.300	0.286	6.01
5)	Bromomethane	0.275	0.253	0.223	0.215	0.216	0.204	0.190	0.225	12.95
6)	Chloroethane	0.203	0.232	0.219	0.222	0.222	0.210	0.211	0.217	4.37
7)	Trichlorofluorome	0.137	0.154	0.142	0.159	0.166	0.162	0.164	0.155	7.23
8)	Acrolein	0.030	0.030	0.031	0.036	0.036	0.033	0.033	0.033	8.00
9)C	1,1-Dichloroethen	0.287	0.299	0.298	0.320	0.322	0.306	0.312	0.306	4.04
10)	Freon 113	0.174	0.190	0.191	0.225	0.225	0.213	0.216	0.205	9.65
11)	Acetone	0.065	0.062	0.057	0.052	0.053	0.053	0.052	0.056	9.61
12)	Iodomethane	0.405	0.432	0.438	0.436	0.447	0.434	0.445	0.434	3.22
13)	Methyl acetate	0.199	0.203	0.197	0.179	0.188	0.186	0.185	0.191	4.56
14)	Carbon Disulfide	0.833	0.878	0.869	0.908	0.930	0.885	0.918	0.889	3.74
15)	Methylene Chlorid	0.410	0.424	0.407	0.404	0.396	0.378	0.376	0.399	4.34
16)	Tert Butyl Alcoho	0.015	0.018	0.018	0.015	0.017	0.018	0.018	0.017	8.14
17)	trans-1,2-Dichlor	0.328	0.340	0.340	0.344	0.351	0.337	0.344	0.341	2.11
18)	Acrylonitrile	0.086	0.099	0.097	0.091	0.097	0.098	0.097	0.095	4.82
19)	Methyl Tert Butyl	0.577	0.603	0.572	0.555	0.578	0.587	0.594	0.581	2.70
20)	Hexane	0.300	0.281	0.283	0.341	0.346	0.320	0.315	0.312	8.32
21)P	1,1-Dichloroethan	0.428	0.457	0.436	0.445	0.450	0.430	0.435	0.440	2.44
22)	Vinyl acetate	0.513	0.554	0.582	0.564	0.569	0.552	0.517	0.550	4.74
23)	Di-isopropyl ethe	0.944	1.012	0.992	0.981	0.988	0.943	0.934	0.971	3.09
24)	Ethyl tert-butyl	0.721	0.735	0.733	0.737	0.753	0.739	0.749	0.738	1.43
25)	2,2-Dichloropropa	0.208	0.200	0.197	0.210	0.209	0.202	0.195	0.203	2.91
26)	cis-1,2-Dichloroe	0.282	0.305	0.302	0.308	0.307	0.302	0.307	0.302	3.03
27)	2-Butanone	0.113	0.118	0.120	0.105	0.111	0.112	0.109	0.113	4.48
28)	Bromochloromethan	0.124	0.142	0.145	0.146	0.147	0.149	0.150	0.143	6.13
29)C	Chloroform	0.343	0.363	0.358	0.362	0.364	0.353	0.362	0.358	2.09
30)	Tetrahydrofuran	0.048	0.035	0.033	0.030	0.031	0.031	0.029	0.034	19.44

----- Linear regression ----- Coefficient = 0.9988
Response Ratio = 0.00148 + 0.02898 *A

31)	1,1,1-Trichloroet	0.196	0.201	0.204	0.213	0.218	0.210	0.215	0.208	3.79
32)S	Dibromofluorometh	0.211	0.221	0.210	0.217	0.221	0.221	0.226	0.218	2.61
33)	Cyclohexane	0.390	0.405	0.413	0.479	0.485	0.453	0.447	0.439	8.43
34)	1,1-Dichloroprope	0.283	0.279	0.292	0.313	0.321	0.312	0.316	0.302	5.61
35)	Carbon Tetrachlor	0.142	0.161	0.164	0.176	0.181	0.177	0.183	0.169	8.57
36)S	1,2-Dichloroethan	0.159	0.173	0.166	0.161	0.165	0.162	0.166	0.165	2.76
37)	Benzene	1.089	1.108	1.092	1.113	1.134	1.098	1.119	1.108	1.43
38)	1,2-Dichloroethan	0.181	0.193	0.200	0.205	0.200	0.204	0.201	0.198	4.13
39)	tert-amyl methyl	0.712	0.774	0.759	0.736	0.767	0.769	0.782	0.757	3.26
40)	Trichloroethene	0.212	0.223	0.218	0.229	0.233	0.229	0.236	0.226	3.78
41)	Methylcyclohexane	0.318	0.332	0.335	0.391	0.401	0.384	0.388	0.364	9.38
42)C	1,2-Dichloropropa	0.320	0.304	0.310	0.316	0.320	0.310	0.318	0.314	1.90
43)	Dibromomethane	0.129	0.147	0.169	0.160	0.166	0.165	0.170	0.158	9.61

Initial Calibration Summary

Job Number: T16448
Account: ITTXHO Shaw E & I, Inc.
Project: Longhorn Army Ammunition Plant

Sample: VF2305-ICC2305
Lab FileID: F0078967.D


```
44)  1,4-Dioxane       0.002 0.002 0.002 0.002 0.003 0.003 0.003 0.002  17.15
            ----- Linear regression -----  Coefficient =  0.9989
              Response Ratio = -0.00341 + 0.00271 *A

45)  Bromodichlorometh 0.287 0.300 0.298 0.307 0.311 0.306 0.317 0.304   3.19
46)  2-Nitropropane    0.046 0.042 0.041 0.037 0.038 0.039 0.038 0.040   7.95
47)  2-Chloroethyl vin 0.094 0.104 0.122 0.125 0.136 0.143 0.152 0.125  16.72
            ----- Linear regression -----  Coefficient =  0.9983
              Response Ratio = -0.06248 + 0.15260 *A

48)  4-Methyl-2-pentan 0.229 0.239 0.249 0.234 0.246 0.246 0.237 0.240   3.06
49)  cis-1,3-Dichlorop 0.369 0.397 0.420 0.427 0.443 0.439 0.454 0.421   6.95

50) I   Chlorobenzene-d5      ----------------ISTD--------------------
51)S Toluene-d8        1.147 1.122 1.060 1.073 1.083 1.079 1.120 1.098   2.89
52)C Toluene           1.382 1.408 1.358 1.387 1.384 1.367 1.417 1.386   1.51
53)  trans-1,3-Dichlor 0.340 0.364 0.391 0.402 0.406 0.409 0.428 0.391   7.65
54)  1,1,2-Trichloroet 0.263 0.295 0.289 0.279 0.283 0.284 0.289 0.283   3.62
55)  Tetrachloroethene 0.272 0.280 0.293 0.302 0.309 0.299 0.307 0.294   4.70
56)  2-hexanone        0.170 0.180 0.203 0.194 0.206 0.211 0.208 0.196   8.04
57)  1,3-Dichloropropa 0.605 0.605 0.602 0.593 0.592 0.591 0.602 0.599   1.05
58)  Dibromochlorometh 0.254 0.312 0.303 0.296 0.299 0.304 0.315 0.298   6.92
59)  1,2-Dibromoethane 0.283 0.310 0.305 0.302 0.314 0.320 0.331 0.309   4.87
60)  1-Chlorohexane    0.464 0.467 0.465 0.505 0.517 0.509 0.535 0.495   5.83
61)P Chlorobenzene     0.877 0.857 0.851 0.870 0.877 0.867 0.897 0.871   1.73
62)  1,1,1,2-Tetrachlo 0.264 0.284 0.283 0.282 0.281 0.279 0.288 0.280   2.74
63)C Ethylbenzene      1.475 1.458 1.433 1.493 1.499 1.470 1.518 1.478   1.90
64)  m,p-Xylene        0.970 0.990 1.008 1.040 1.057 1.039 1.067 1.025   3.51
65)  o-Xylene          1.021 1.033 1.058 1.084 1.107 1.077 1.111 1.070   3.23
66)  Styrene           0.796 0.855 0.910 0.960 0.983 0.978 1.013 0.928   8.44
67)P Bromoform         0.142 0.077 0.184 0.179 0.195 0.199 0.205 0.169  26.85
            ----- Linear regression -----  Coefficient =  0.9995
              Response Ratio = -0.01246 + 0.20679 *A


68) I   1,4-Dichlorobenzene-d ----------------ISTD--------------------
69)  Isopropylbenzene  3.394 3.422 2.803 2.838 2.780 2.731 2.618 2.941  11.11
70)  Cyclohexanone     0.023 0.030 0.027 0.025 0.026 0.029 0.027 0.027   8.23
71)S 4-Bromofluorobenz 1.169 1.004 0.864 0.853 0.853 0.860 0.845 0.921  13.32
72)  Bromobenzene      0.997 0.963 0.842 0.837 0.823 0.822 0.788 0.867   9.15
73)P 1,1,2,2-Tetrachlo 1.339 1.320 1.146 1.011 1.011 1.030 0.983 1.120  13.59
74)  Trans-1,4-Dichlor 0.143 0.182 0.177 0.182 0.188 0.192 0.192 0.179   9.42
75)  1,2,3-Trichloropr 0.257 0.296 0.253 0.232 0.230 0.236 0.225 0.247  10.10
76)  n-Propylbenzene   4.567 4.426 4.010 4.105 4.023 3.954 3.865 4.136   6.29
77)  2-Chlorotoluene   3.164 2.888 2.531 2.500 2.416 2.351 2.285 2.591  12.31
78)  4-Chlorotoluene   2.569 2.376 2.183 2.187 2.133 2.116 2.076 2.234   7.90
79)  1,3,5-Trimethylbe 2.668 2.535 2.320 2.351 2.287 2.250 2.168 2.368   7.33
80)  sec-Butylbenzene  3.329 3.252 3.038 3.232 3.150 3.042 2.937 3.140   4.47
81)  1,3-Dichlorobenze 1.316 1.426 1.364 1.413 1.441 1.419 1.422 1.400   3.16
82)  4-Isopropyltoluen 2.408 2.304 2.224 2.403 2.346 2.277 2.220 2.312   3.37
83)  1,4-Dichlorobenze 1.528 1.430 1.389 1.429 1.420 1.423 1.424 1.435   3.04
84)  tert-Butylbenzene 0.533 0.438 0.430 0.445 0.436 0.429 0.410 0.446   8.90
85)  n-Butylbenzene    1.465 1.572 1.892 2.173 2.149 2.132 2.214 1.942  15.91
            ----- Linear regression -----  Coefficient =  0.9997
              Response Ratio = -0.08322 + 2.22219 *A

86)  1,2-Dichlorobenze 1.206 1.332 1.314 1.336 1.345 1.359 1.369 1.323   4.14
87)  1,2,4-Trimethylbe 2.566 2.449 2.311 2.410 2.354 2.310 2.242 2.377   4.53
88)  1,2-Dibromo-3-Chl 0.068 0.106 0.082 0.072 0.077 0.089 0.088 0.083  15.22
            ----- Linear regression -----  Coefficient =  0.9968
```

Initial Calibration Summary

Job Number: T16448
Account: ITTXHO Shaw E & I, Inc.
Project: Longhorn Army Ammunition Plant

Sample: VF2305-ICC2305
Lab FileID: F0078967.D


```
              Response Ratio = -0.00467 + 0.08863 *A

89)  1,2,4-Trichlorobe 0.166 0.135 0.302 0.403 0.468 0.530 0.585 0.370  47.33
            ----- Linear regression -----  Coefficient =  0.9944
              Response Ratio = -0.09820 + 0.59565 *A

90)  Hexachlorobutadie 0.058 0.088 0.170 0.207 0.204 0.208 0.202 0.162  38.83
            ----- Linear regression -----  Coefficient =  0.9993
              Response Ratio = -0.00579 + 0.20548 *A

91)  Naphthalene       0.526 0.280 0.475 0.606 0.781 0.975 1.125 0.681  43.48
          ----- Quadratic regression -----  Coefficient =  0.9974
              Response Ratio = -0.07686 + 0.74236 *A + 0.10172 *A^2

92)  1,2,3-Trichlorobe 0.167 0.113 0.217 0.276 0.334 0.389 0.421 0.274  41.95
            ----- Linear regression -----  Coefficient =  0.9938
              Response Ratio = -0.07169 + 0.43007 *A

--------------------------------------------------------------------------------
(#) = Out of Range

          VF2305C.M         Thu Mar 01 07:44:03 2007
```

Continuing Calibration Summary

Job Number: T16448
Account: ITTXHO Shaw E & I, Inc.
Project: Longhorn Army Ammunition Plant

Sample: VF2315-CC2305
Lab FileID: F0079182.D

Evaluate Continuing Calibration Report

Data File : C:\HPCHEM\1\DATA\VF2315~1\F0079182.D Vial: 2
Acq On : 7 Mar 2007 1:19 pm Operator: lydiaj
Sample : cc2305-40 Inst : GC/MS F
Misc : ms3885,vf2315,,,,5,1,water Multiplr: 1.00
MS Integration Params: RTEINT.P

Method : C:\HPCHEM\1\METHODS\VF2305C.M (RTE Integrator)
Title : SW846 8260B and EPA 624
Last Update : Thu Mar 01 07:31:12 2007
Response via : Multiple Level Calibration

Min. RRF : 0.001 Min. Rel. Area : 50% Max. R.T. Dev 0.50min
Max. RRF Dev : 20% Max. Rel. Area : 200%

		Compound	AvgRF	CCRF	%Dev	Area%	Dev(min)
1	I	Fluorobenzene	1.000	1.000	0.0	86	-0.08
2		Dichlorodifluoromethane	0.171	0.148	13.5	74	-0.04
3	P	Chloromethane	0.329	0.330	-0.3	92	-0.05
4	C	Vinyl Chloride	0.286	0.292	-2.1	90	-0.06
5		Bromomethane	0.225	0.223	0.9	89	-0.07
6		Chloroethane	0.217	0.226	-4.1	88	-0.06
7		Trichlorofluoromethane	0.155	0.162	-4.5	87	-0.06
8		Acrolein	0.033	0.034	-3.0	81	-0.08
9	C	1,1-Dichloroethene	0.306	0.297	2.9	80	-0.07
10		Freon 113	0.205	0.193	5.9	73	-0.07
11		Acetone	0.056	0.051	8.9	84	-0.07
12		Iodomethane	0.434	0.399	8.1	78	-0.07
13		Methyl acetate	0.191	0.208	-8.9	100	-0.07
14		Carbon Disulfide	0.889	0.797	10.3	75	-0.07
15		Methylene Chloride	0.399	0.419	-5.0	89	-0.07
16		Tert Butyl Alcohol	0.017	0.019	-11.8	103	-0.08
17		trans-1,2-Dichloroethene	0.341	0.339	0.6	84	-0.07
18		Acrylonitrile	0.095	0.092	3.2	86	-0.07
19		Methyl Tert Butyl Ether	0.581	0.574	1.2	89	-0.07
20		Hexane	0.312	0.316	-1.3	79	-0.08
21	P	1,1-Dichloroethane	0.440	0.453	-3.0	87	-0.08
22		Vinyl acetate	0.550	0.609	-10.7	93	-0.08
23		Di-isopropyl ether	0.971	1.066	-9.8	93	-0.07
24		Ethyl tert-butyl ether	0.738	0.773	-4.7	90	-0.07
25		2,2-Dichloropropane	0.203	0.210	-3.4	86	-0.07
26		cis-1,2-Dichloroethene	0.302	0.307	-1.7	86	-0.08
27		2-Butanone	0.113	0.108	4.4	88	-0.08
28		Bromochloromethane	0.143	0.147	-2.8	86	-0.08
29	C	Chloroform	0.358	0.370	-3.4	88	-0.08
30		Tetrahydrofuran	0.034	0.032	5.9	91	-0.08
31		1,1,1-Trichloroethane	0.208	0.210	-1.0	84	-0.08
32	S	Dibromofluoromethane	0.218	0.227	-4.1	90	-0.08
33		Cyclohexane	0.439	0.451	-2.7	81	-0.08
34		1,1-Dichloropropene	0.302	0.317	-5.0	87	-0.08
35		Carbon Tetrachloride	0.169	0.174	-3.0	85	-0.08
36	S	1,2-Dichloroethane-d4	0.165	0.176	-6.7	94	-0.08
37		Benzene	1.108	1.127	-1.7	87	-0.08
38		1,2-Dichloroethane	0.198	0.213	-7.6	89	-0.08
39		tert-amyl methyl ether	0.757	0.777	-2.6	91	-0.08
40		Trichloroethene	0.226	0.232	-2.7	87	-0.08
41		Methylcyclohexane	0.364	0.371	-1.9	81	-0.08
42	C	1,2-Dichloropropane	0.314	0.336	-7.0	91	-0.09

Continuing Calibration Summary

Job Number: T16448
Account: ITTXHO Shaw E & I, Inc.
Project: Longhorn Army Ammunition Plant

Sample: VF2315-CC2305
Lab FileID: F0079182.D

43		Dibromomethane	0.158	0.169	-7.0	91	-0.09
44		1,4-Dioxane	0.002	0.003	-50.0#	106	-0.09
45		Bromodichloromethane	0.304	0.321	-5.6	90	-0.08
46		2-Nitropropane	0.040	0.042	-5.0	98	-0.08
47		2-Chloroethyl vinyl ether	0.125	0.124	0.8	85	-0.08
48		4-Methyl-2-pentanone	0.240	0.236	1.7	87	-0.09
49		cis-1,3-Dichloropropene	0.421	0.461	-9.5	93	-0.08
50	I	Chlorobenzene-d5	1.000	1.000	0.0	90	-0.08
51	S	Toluene-d8	1.098	1.096	0.2	92	-0.08
52	C	Toluene	1.386	1.363	1.7	89	-0.08
53		trans-1,3-Dichloropropene	0.391	0.405	-3.6	91	-0.07
54		1,1,2-Trichloroethane	0.283	0.289	-2.1	93	-0.08
55		Tetrachloroethene	0.294	0.299	-1.7	89	-0.09
56		2-hexanone	0.196	0.182	7.1	85	-0.08
57		1,3-Dichloropropane	0.599	0.606	-1.2	92	-0.08
58		Dibromochloromethane	0.298	0.306	-2.7	94	-0.08
59		1,2-Dibromoethane	0.309	0.310	-0.3	93	-0.08
60		1-Chlorohexane	0.495	0.501	-1.2	90	-0.09
61	P	Chlorobenzene	0.871	0.876	-0.6	91	-0.09
62		1,1,1,2-Tetrachloroethane	0.280	0.286	-2.1	92	-0.08
63	C	Ethylbenzene	1.478	1.474	0.3	89	-0.09
64		m,p-Xylene	1.025	1.039	-1.4	90	-0.08
65		o-Xylene	1.070	1.102	-3.0	92	-0.09
66		Styrene	0.928	0.964	-3.9	91	-0.08
67	P	Bromoform	0.169	0.198	-17.2	100	-0.09
68	I	1,4-Dichlorobenzene-d4	1.000	1.000	0.0	93	-0.09
69		Isopropylbenzene	2.941	2.758	6.2	90	-0.08
70		Cyclohexanone	0.027	0.039	-44.4#	142	-0.10
71	S	4-Bromofluorobenzene	0.921	0.840	8.8	92	-0.09
72		Bromobenzene	0.867	0.840	3.1	93	-0.09
73	P	1,1,2,2-Tetrachloroethane	1.120	1.065	4.9	98	-0.09
74		Trans-1,4-Dichloro-2-Butene	0.179	0.176	1.7	90	-0.09
75		1,2,3-Trichloropropane	0.247	0.240	2.8	96	-0.09
76		n-Propylbenzene	4.136	4.041	2.3	92	-0.09
77		2-Chlorotoluene	2.591	2.463	4.9	92	-0.09
78		4-Chlorotoluene	2.234	2.117	5.2	90	-0.10
79		1,3,5-Trimethylbenzene	2.368	2.281	3.7	90	-0.09
80		sec-Butylbenzene	3.140	3.101	1.2	89	-0.09
81		1,3-Dichlorobenzene	1.400	1.439	-2.8	95	-0.09
82		4-Isopropyltoluene	2.312	2.294	0.8	89	-0.09
83		1,4-Dichlorobenzene	1.435	1.431	0.3	93	-0.09
84		tert-Butylbenzene	0.446	0.438	1.8	91	-0.10
85		n-Butylbenzene	1.942	2.030	-4.5	87	-0.10
86		1,2-Dichlorobenzene	1.323	1.352	-2.2	94	-0.09
87		1,2,4-Trimethylbenzene	2.377	2.379	-0.1	92	-0.09
88		1,2-Dibromo-3-Chloropropane	0.083	0.071	14.5	92	-0.10
89		1,2,4-Trichlorobenzene	0.370	0.343	7.3	79	-0.09
90		Hexachlorobutadiene	0.162	0.192	-18.5	86	-0.11
91		Naphthalene	0.681	0.550	19.2	84	-0.12
92		1,2,3-Trichlorobenzene	0.274	0.247	9.9	83	-0.12

Average % D = 5.5

(#) = Out of Range SPCC's out = 0 CCC's out = 0
F0078967.D VF2305C.M Thu Mar 08 11:48:42 2007

Continuing Calibration Summary

Job Number: T16448
Account: ITTXHO Shaw E & I, Inc.
Project: Longhorn Army Ammunition Plant

Sample: VF2318-CC2305
Lab FileID: F0079223.D

Evaluate Continuing Calibration Report

Data File : C:\HPCHEM\1\DATA\VF2318~1\F0079223.D Vial: 2
Acq On : 8 Mar 2007 10:59 am Operator: lydiaj
Sample : cc2305-40 Inst : GC/MS F
Misc : ms3889,vf2318,,,,5,1,water Multiplr: 1.00
MS Integration Params: RTEINT.P

Method : C:\HPCHEM\1\METHODS\VF2305C.M (RTE Integrator)
Title : SW846 8260B and EPA 624
Last Update : Thu Mar 01 07:31:12 2007
Response via : Multiple Level Calibration

Min. RRF : 0.001 Min. Rel. Area : 50% Max. R.T. Dev 0.50min
Max. RRF Dev : 20% Max. Rel. Area : 200%

		Compound	AvgRF	CCRF	%Dev	Area%	Dev(min)
1	I	Fluorobenzene	1.000	1.000	0.0	86	-0.08
2		Dichlorodifluoromethane	0.171	0.134	21.6#	68	-0.04
3	P	Chloromethane	0.329	0.313	4.9	87	-0.05
4	C	Vinyl Chloride	0.286	0.273	4.5	84	-0.06
5		Bromomethane	0.225	0.222	1.3	89	-0.07
6		Chloroethane	0.217	0.229	-5.5	89	-0.06
7		Trichlorofluoromethane	0.155	0.168	-8.4	91	-0.07
8		Acrolein	0.033	0.033	0.0	81	-0.07
9	C	1,1-Dichloroethene	0.306	0.303	1.0	81	-0.07
10		Freon 113	0.205	0.207	-1.0	79	-0.07
11		Acetone	0.056	0.042	25.0#	70	-0.07
12		Iodomethane	0.434	0.423	2.5	83	-0.07
13		Methyl acetate	0.191	0.176	7.9	84	-0.07
14		Carbon Disulfide	0.889	0.841	5.4	80	-0.08
15		Methylene Chloride	0.399	0.413	-3.5	88	-0.07
16		Tert Butyl Alcohol	0.017	0.017	0.0	92	-0.07
17		trans-1,2-Dichloroethene	0.341	0.350	-2.6	87	-0.07
18		Acrylonitrile	0.095	0.078	17.9	73	-0.07
19		Methyl Tert Butyl Ether	0.581	0.562	3.3	87	-0.07
20		Hexane	0.312	0.315	-1.0	79	-0.08
21	P	1,1-Dichloroethane	0.440	0.464	-5.5	89	-0.07
22		Vinyl acetate	0.550	0.547	0.5	83	-0.07
23		Di-isopropyl ether	0.971	1.060	-9.2	93	-0.07
24		Ethyl tert-butyl ether	0.738	0.774	-4.9	90	-0.07
25		2,2-Dichloropropane	0.203	0.232	-14.3	95	-0.07
26		cis-1,2-Dichloroethene	0.302	0.324	-7.3	90	-0.08
27		2-Butanone	0.113	0.090	20.4#	74	-0.08
28		Bromochloromethane	0.143	0.149	-4.2	88	-0.08
29	C	Chloroform	0.358	0.387	-8.1	92	-0.08
30		Tetrahydrofuran	0.034	0.028	17.6	80	-0.08
31		1,1,1-Trichloroethane	0.208	0.224	-7.7	90	-0.08
32	S	Dibromofluoromethane	0.218	0.236	-8.3	93	-0.07
33		Cyclohexane	0.439	0.472	-7.5	85	-0.08
34		1,1-Dichloropropene	0.302	0.328	-8.6	90	-0.08
35		Carbon Tetrachloride	0.169	0.187	-10.7	91	-0.07
36	S	1,2-Dichloroethane-d4	0.165	0.169	-2.4	90	-0.08
37		Benzene	1.108	1.177	-6.2	91	-0.07
38		1,2-Dichloroethane	0.198	0.206	-4.0	86	-0.08
39		tert-amyl methyl ether	0.757	0.767	-1.3	90	-0.08
40		Trichloroethene	0.226	0.248	-9.7	93	-0.08
41		Methylcyclohexane	0.364	0.394	-8.2	87	-0.08
42	C	1,2-Dichloropropane	0.314	0.345	-9.9	94	-0.08

Continuing Calibration Summary

Job Number: T16448
Account: ITTXHO Shaw E & I, Inc.
Project: Longhorn Army Ammunition Plant

Sample: VF2318-CC2305
Lab FileID: F0079223.D

43		Dibromomethane	0.158	0.163	-3.2	88	-0.08
44		1,4-Dioxane	0.002	0.002	0.0	89	-0.08
45		Bromodichloromethane	0.304	0.332	-9.2	93	-0.08
46		2-Nitropropane	0.040	0.036	10.0	84	-0.08
47		2-Chloroethyl vinyl ether	0.125	0.110	12.0	76	-0.08
48		4-Methyl-2-pentanone	0.240	0.206	14.2	76	-0.08
49		cis-1,3-Dichloropropene	0.421	0.471	-11.9	95	-0.08
50	I	Chlorobenzene-d5	1.000	1.000	0.0	90	-0.08
51	S	Toluene-d8	1.098	1.138	-3.6	96	-0.08
52	C	Toluene	1.386	1.437	-3.7	94	-0.08
53		trans-1,3-Dichloropropene	0.391	0.405	-3.6	91	-0.07
54		1,1,2-Trichloroethane	0.283	0.284	-0.4	92	-0.08
55		Tetrachloroethene	0.294	0.324	-10.2	97	-0.09
56		2-hexanone	0.196	0.157	19.9	73	-0.08
57		1,3-Dichloropropane	0.599	0.582	2.8	89	-0.08
58		Dibromochloromethane	0.298	0.305	-2.3	93	-0.08
59		1,2-Dibromoethane	0.309	0.301	2.6	90	-0.08
60		1-Chlorohexane	0.495	0.527	-6.5	94	-0.08
61	P	Chlorobenzene	0.871	0.923	-6.0	96	-0.09
62		1,1,1,2-Tetrachloroethane	0.280	0.299	-6.8	96	-0.09
63	C	Ethylbenzene	1.478	1.578	-6.8	96	-0.09
64		m,p-Xylene	1.025	1.080	-5.4	94	-0.08
65		o-Xylene	1.070	1.152	-7.7	96	-0.08
66		Styrene	0.928	0.989	-6.6	93	-0.08
67	P	Bromoform	0.169	0.180	-6.5	91	-0.09
68	I	1,4-Dichlorobenzene-d4	1.000	1.000	0.0	90	-0.09
69		Isopropylbenzene	2.941	3.019	-2.7	95	-0.08
70		Cyclohexanone	0.027	0.046	-70.4#	163	-0.10
71	S	4-Bromofluorobenzene	0.921	0.912	1.0	96	-0.09
72		Bromobenzene	0.867	0.917	-5.8	98	-0.09
73	P	1,1,2,2-Tetrachloroethane	1.120	1.007	10.1	89	-0.09
74		Trans-1,4-Dichloro-2-Butene	0.179	0.160	10.6	79	-0.10
75		1,2,3-Trichloropropane	0.247	0.233	5.7	90	-0.09
76		n-Propylbenzene	4.136	4.335	-4.8	95	-0.09
77		2-Chlorotoluene	2.591	2.658	-2.6	95	-0.09
78		4-Chlorotoluene	2.234	2.314	-3.6	95	-0.10
79		1,3,5-Trimethylbenzene	2.368	2.500	-5.6	95	-0.08
80		sec-Butylbenzene	3.140	3.327	-6.0	92	-0.09
81		1,3-Dichlorobenzene	1.400	1.523	-8.8	97	-0.09
82		4-Isopropyltoluene	2.312	2.458	-6.3	92	-0.09
83		1,4-Dichlorobenzene	1.435	1.494	-4.1	94	-0.09
84		tert-Butylbenzene	0.446	0.456	-2.2	92	-0.10
85		n-Butylbenzene	1.942	2.065	-6.3	85	-0.10
86		1,2-Dichlorobenzene	1.323	1.387	-4.8	93	-0.09
87		1,2,4-Trimethylbenzene	2.377	2.512	-5.7	94	-0.09
88		1,2-Dibromo-3-Chloropropane	0.083	0.069	16.9	85	-0.09
89		1,2,4-Trichlorobenzene	0.370	0.322	13.0	72	-0.09
90		Hexachlorobutadiene	0.162	0.201	-24.1#	87	-0.10
91		Naphthalene	0.681	0.464	31.9#	69	-0.11
92		1,2,3-Trichlorobenzene	0.274	0.216	21.2#	70	-0.11

Average % D = 8.2

(#) = Out of Range SPCC's out = 0 CCC's out = 0
F0078967.D VF2305C.M Fri Mar 09 16:10:50 2007

Metals Analysis

QC Data Summaries

Includes the following where applicable:

- Instrument Runlogs
- Initial and Continuing Calibration Blanks
- Initial and Continuing Calibration Checks
- High and Low Check Standards
- Interfering Element Check Standards
- Method Blank Summaries
- Matrix Spike and Duplicate Summaries
- Blank Spike and Lab Control Sample Summaries
- Serial Dilution Summaries

Accutest Laboratories Instrument Runlog
Inorganics Analyses

Login Number: T16448
Account: ITTXHO - Shaw E & I, Inc.
Project: Longhorn Army Ammunition Plant

File ID: IR022807.ASC Date Analyzed: 02/28/07 Methods: SW846 6010B
Analyst: NS Run ID: MA2815
Parameters: Cr

Time	Sample Description	Dilution Factor	PS Recov	Comments
10:29	MA2815-STD1	1		STDA
10:36	MA2815-STD2	1		STDC
10:42	MA2815-STD3	1		STDE
10:47	MA2815-STD4	1		STDB
10:53	MA2815-STD5	1		STDD
11:53	MA2815-HSTD1	1		
12:00	MA2815-ICV1	1		
12:06	MA2815-ICB1	1		
12:13	MA2815-CRIB1	1		
12:29	MA2815-ICSA1	1		
12:36	MA2815-ICSAB1	1		
12:44	MA2815-CCV1	1		
12:51	MA2815-CCB1	1		
12:57	MP5805-MB1	1		
13:04	MP5805-LC1	1		
13:11	T16368-10	1		(sample used for QC only; not part of login T16448)
13:17	MP5805-D1	1		
13:24	MP5805-SD1	5		
13:30	MP5805-S1	1		
13:37	MP5805-S2	1		
13:44	ZZZZZZ	1		
13:50	ZZZZZZ	1		
13:57	ZZZZZZ	1		
14:04	MA2815-CCV2	1		
14:10	MA2815-CCB2	1		
14:26	ZZZZZZ	1		
14:33	ZZZZZZ	1		
14:39	ZZZZZZ	1		
14:46	ZZZZZZ	1		
14:52	ZZZZZZ	1		
14:59	ZZZZZZ	1		
15:06	ZZZZZZ	1		
15:12	ZZZZZZ	1		

Accutest Laboratories Instrument Runlog
Inorganics Analyses

Login Number: T16448
Account: ITTXHO - Shaw E & I, Inc.
Project: Longhorn Army Ammunition Plant

File ID: IR022807.ASC Date Analyzed: 02/28/07 Methods: SW846 6010B
Analyst: NS Run ID: MA2815
Parameters: Cr

Time	Sample Description	Dilution Factor	PS Recov	Comments
15:19	ZZZZZZ	1		
15:26	ZZZZZZ	1		
15:34	MA2815-CCV3	1		
15:42	MA2815-CCB3	1		
15:49	ZZZZZZ	1		
15:56	ZZZZZZ	1		
16:02	ZZZZZZ	1		
16:09	ZZZZZZ	1		
16:16	ZZZZZZ	1		
16:22	ZZZZZZ	1		
16:31	MA2815-CCV4	1		
16:39	MA2815-CCB4	1		
16:46	MP5797-MB1	1		
16:52	MP5797-B1	1		
16:59	T16390-1	1		(sample used for QC only; not part of login T16448)
17:05	MP5797-D1	1		
17:12	MP5797-SD1	5		
17:19	MP5797-S1	1		
17:25	MP5797-S2	1		
17:39	ZZZZZZ	1		
17:45	ZZZZZZ	1		
17:54	MA2815-CCV5	1		
18:02	MA2815-CCB5	1		
18:17	MA2815-CCV6	1		
18:25	MA2815-CCB6	1		
18:32	MP5798-MB1	1		
18:39	MP5798-B1	1		
18:45	T16386-1	1		(sample used for QC only; not part of login T16448)
18:52	MP5798-D1	1		
18:59	MP5798-SD1	5		
19:05	MP5798-S1	1		
19:12	MP5798-S2	1		
19:20	MA2815-CCV7	1		

Accutest Laboratories Instrument Runlog
Inorganics Analyses

Login Number: T16448
Account: ITTXHO - Shaw E & I, Inc.
Project: Longhorn Army Ammunition Plant

File ID: IR022807.ASC Date Analyzed: 02/28/07 Methods: SW846 6010B
Analyst: NS Run ID: MA2815
Parameters: Cr

Time	Sample Description	Dilution Factor	PS Recov	Comments
19:29	MA2815-CCB7	1		
19:35	ZZZZZZ	5		
19:42	ZZZZZZ	5		
19:50	MA2815-CCV8	1		
19:59	MA2815-CCB8	1		
20:05	MP5804-MB1	1		
20:12	MP5804-B1	1		
20:19	T16414-1	1		(sample used for QC only; not part of login T16448)
20:25	MP5804-D1	1		
20:32	MP5804-SD1	5		
20:38	MP5804-S1	1		
20:45	MP5804-S2	1		
20:52	T16448-3	1		
---------->	Last reportable sample/prep for job T16448			
20:58	ZZZZZZ	1		
21:05	ZZZZZZ	1		
21:13	MA2815-CCV9	1		
21:22	MA2815-CCB9	1		
---------->	Last reportable CCB for job T16448			
21:28	ZZZZZZ	1		
21:37	MA2815-CCV10	1		
21:45	MA2815-CCB10	1		

Refer to raw data for calibration curve and standards.

INTERNAL STANDARD SUMMARY

Login Number: T16448
Account: ITTXHO - Shaw E & I, Inc.
Project: Longhorn Army Ammunition Plant

File ID: IR022807.ASC Date Analyzed: 02/28/07 Methods: SW846 6010B
Analyst: NS Run ID: MA2815
Parameters: Cr

Time	Sample Description	Istd#1
10:29	MA2815-STD1	35191 R
10:36	MA2815-STD2	35110
10:42	MA2815-STD3	34622
10:47	MA2815-STD4	35248
10:53	MA2815-STD5	35473
11:53	MA2815-HSTD1	34726
12:00	MA2815-ICV1	35160
12:06	MA2815-ICB1	35577
12:13	MA2815-CRIB1	35176
12:29	MA2815-ICSA1	33297
12:36	MA2815-ICSAB1	32873
12:44	MA2815-CCV1	33774
12:51	MA2815-CCB1	33955
12:57	MP5805-MB1	34090
13:04	MP5805-LC1	38051
13:11	T16368-10	36813
13:17	MP5805-D1	36865
13:24	MP5805-SD1	34542
13:30	MP5805-S1	36557
13:37	MP5805-S2	36279
13:44	ZZZZZZ	36543
13:50	ZZZZZZ	36660
13:57	ZZZZZZ	36149
14:04	MA2815-CCV2	33600
14:10	MA2815-CCB2	33939
14:26	ZZZZZZ	36687
14:33	ZZZZZZ	36158
14:39	ZZZZZZ	36313
14:46	ZZZZZZ	36401
14:52	ZZZZZZ	37023
14:59	ZZZZZZ	36200
15:06	ZZZZZZ	35974
15:12	ZZZZZZ	36687

INTERNAL STANDARD SUMMARY

Login Number: T16448
Account: ITTXHO - Shaw E & I, Inc.
Project: Longhorn Army Ammunition Plant

File ID: IR022807.ASC Date Analyzed: 02/28/07 Methods: SW846 6010B
Analyst: NS Run ID: MA2815
Parameters: Cr

Time	Sample Description	Istd#1
15:19	ZZZZZZ	36421
15:26	ZZZZZZ	33854
15:34	MA2815-CCV3	33805
15:42	MA2815-CCB3	34060
15:49	ZZZZZZ	34845
15:56	ZZZZZZ	35690
16:02	ZZZZZZ	36145
16:09	ZZZZZZ	35959
16:16	ZZZZZZ	35680
16:22	ZZZZZZ	34030
16:31	MA2815-CCV4	33871
16:39	MA2815-CCB4	34086
16:46	MP5797-MB1	34090
16:52	MP5797-B1	33470
16:59	T16390-1	33848
17:05	MP5797-D1	33681
17:12	MP5797-SD1	33959
17:19	MP5797-S1	33487
17:25	MP5797-S2	33229
17:39	ZZZZZZ	42590
17:45	ZZZZZZ	51777 !
17:54	MA2815-CCV5	33659
18:02	MA2815-CCB5	33977
18:17	MA2815-CCV6	33458
18:25	MA2815-CCB6	33868
18:32	MP5798-MB1	33829
18:39	MP5798-B1	33568
18:45	T16386-1	33446
18:52	MP5798-D1	33730
18:59	MP5798-SD1	33887
19:05	MP5798-S1	33609
19:12	MP5798-S2	33372
19:20	MA2815-CCV7	33902

INTERNAL STANDARD SUMMARY

Login Number: T16448
Account: ITTXHO - Shaw E & I, Inc.
Project: Longhorn Army Ammunition Plant

File ID: IR022807.ASC Date Analyzed: 02/28/07 Methods: SW846 6010B
Analyst: NS Run ID: MA2815
Parameters: Cr

Time	Sample Description	Istd#1
19:29	MA2815-CCB7	34221
19:35	ZZZZZZ	34116
19:42	ZZZZZZ	33707
19:50	MA2815-CCV8	33395
19:59	MA2815-CCB8	33978
20:05	MP5804-MB1	33772
20:12	MP5804-B1	33325
20:19	T16414-1	34128
20:25	MP5804-D1	34110
20:32	MP5804-SD1	34179
20:38	MP5804-S1	33498
20:45	MP5804-S2	33745
20:52	T16448-3	33928
20:58	ZZZZZZ	33803
21:05	ZZZZZZ	33697
21:13	MA2815-CCV9	33632
21:22	MA2815-CCB9	33875
21:28	ZZZZZZ	33538
21:37	MA2815-CCV10	33698
21:45	MA2815-CCB10	33813

R = Reference for ISTD limits. ! = Outside limits.

LEGEND:

Istd#	Parameter	Limits
Istd#1	Yttrium	60-125 %

BLANK RESULTS SUMMARY
Part 1 - Initial and Continuing Calibration Blanks

Login Number: T16448
Account: ITTXHO - Shaw E & I, Inc.
Project: Longhorn Army Ammunition Plant

File ID: IR022807.ASC Date Analyzed: 02/28/07 Methods: SW846 6010B
QC Limits: result < RL Run ID: MA2815 Units: ug/l

Time: / Sample ID:			12:06 ICB1		12:51 CCB1		14:10 CCB2		15:42 CCB3	
Metal	RL	IDL	raw	final	raw	final	raw	final	raw	final
Aluminum	200	51								
Antimony	5.0	1.8								
Arsenic	5.0	1.4	anr							
Barium	200	.1	anr							
Beryllium	5.0	.06								
Boron	100	1.4								
Cadmium	4.0	.5	anr							
Calcium	5000	8								
Chromium	10	.9	0.52	<10	-0.080	<10	-0.30	<10	-0.25	<10
Cobalt	50	.99								
Copper	25	1.4	anr							
Iron	100	16								
Lead	3.0	.7	anr							
Magnesium	5000	8								
Manganese	15	.2	anr							
Molybdenum	10	.45								
Nickel	40	1	anr							
Potassium	5000	80	anr							
Selenium	5.0	1.7	anr							
Silver	10	.5	anr							
Sodium	5000	160								
Strontium	20	.5								
Thallium	10	1.5								
Tin	20	1.5								
Titanium	20	.5								
Vanadium	50	.4	anr							
Zinc	20	.8	anr							

(*) Outside of QC limits
(anr) Analyte not requested

BLANK RESULTS SUMMARY
Part 1 - Initial and Continuing Calibration Blanks

Login Number: T16448
Account: ITTXHO - Shaw E & I, Inc.
Project: Longhorn Army Ammunition Plant

File ID: IR022807.ASC Date Analyzed: 02/28/07 Methods: SW846 6010B
QC Limits: result < RL Run ID: MA2815 Units: ug/l

Time: / Sample ID:			16:39 CCB4		18:02 CCB5		18:25 CCB6		19:29 CCB7	
Metal	RL	IDL	raw	final	raw	final	raw	final	raw	final
Aluminum	200	51								
Antimony	5.0	1.8								
Arsenic	5.0	1.4	anr							
Barium	200	.1	anr							
Beryllium	5.0	.06								
Boron	100	1.4								
Cadmium	4.0	.5	anr							
Calcium	5000	8								
Chromium	10	.9	-0.11	<10	-0.79	<10	-0.67	<10	-0.090	<10
Cobalt	50	.99								
Copper	25	1.4	anr							
Iron	100	16								
Lead	3.0	.7	anr							
Magnesium	5000	8								
Manganese	15	.2	anr							
Molybdenum	10	.45								
Nickel	40	1	anr							
Potassium	5000	80	anr							
Selenium	5.0	1.7	anr							
Silver	10	.5	anr							
Sodium	5000	160								
Strontium	20	.5								
Thallium	10	1.5								
Tin	20	1.5								
Titanium	20	.5								
Vanadium	50	.4	anr							
Zinc	20	.8	anr							

(*) Outside of QC limits
(anr) Analyte not requested

BLANK RESULTS SUMMARY
Part 1 - Initial and Continuing Calibration Blanks

Login Number: T16448
Account: ITTXHO - Shaw E & I, Inc.
Project: Longhorn Army Ammunition Plant

File ID: IR022807.ASC Date Analyzed: 02/28/07 Methods: SW846 6010B
QC Limits: result < RL Run ID: MA2815 Units: ug/l

			19:59		21:22	
Time:						
Sample ID:			CCB8		CCB9	
Metal	RL	IDL	raw	final	raw	final
Aluminum	200	51				
Antimony	5.0	1.8				
Arsenic	5.0	1.4	anr			
Barium	200	.1	anr			
Beryllium	5.0	.06				
Boron	100	1.4				
Cadmium	4.0	.5	anr			
Calcium	5000	8				
Chromium	10	.9	0.080	<10	-0.42	<10
Cobalt	50	.99				
Copper	25	1.4	anr			
Iron	100	16				
Lead	3.0	.7	anr			
Magnesium	5000	8				
Manganese	15	.2	anr			
Molybdenum	10	.45				
Nickel	40	1	anr			
Potassium	5000	80	anr			
Selenium	5.0	1.7	anr			
Silver	10	.5	anr			
Sodium	5000	160				
Strontium	20	.5				
Thallium	10	1.5				
Tin	20	1.5				
Titanium	20	.5				
Vanadium	50	.4	anr			
Zinc	20	.8	anr			

(*) Outside of QC limits
(anr) Analyte not requested

CALIBRATION CHECK STANDARDS SUMMARY
Initial and Continuing Calibration Checks

Login Number: T16448
Account: ITTXHO - Shaw E & I, Inc.
Project: Longhorn Army Ammunition Plant

File ID: IR022807.ASC Date Analyzed: 02/28/07 Methods: SW846 6010B
QC Limits: 90 to 110 % Recovery Run ID: MA2815 Units: ug/l

Time:		12:00			12:44			14:04	
Sample ID:	ICV	ICV1		CCV	CCV1		CCV	CCV2	
Metal	True	Results	% Rec	True	Results	% Rec	True	Results	% Rec
Aluminum									
Antimony									
Arsenic	anr								
Barium	anr								
Beryllium									
Boron									
Cadmium	anr								
Calcium									
Chromium	1000	997	99.7	2000	1980	99.0	2000	1980	99.0
Cobalt									
Copper	anr								
Iron									
Lead	anr								
Magnesium									
Manganese	anr								
Molybdenum									
Nickel	anr								
Potassium	anr								
Selenium	anr								
Silver	anr								
Sodium									
Strontium									
Thallium									
Tin									
Titanium									
Vanadium	anr								
Zinc	anr								

(*) Outside of QC limits
(anr) Analyte not requested

CALIBRATION CHECK STANDARDS SUMMARY
Initial and Continuing Calibration Checks

Login Number: T16448
Account: ITTXHO - Shaw E & I, Inc.
Project: Longhorn Army Ammunition Plant

File ID: IR022807.ASC Date Analyzed: 02/28/07 Methods: SW846 6010B
QC Limits: 90 to 110 % Recovery Run ID: MA2815 Units: ug/l

Time:		15:34			16:31			17:54	
Sample ID:	CCV	CCV3		CCV	CCV4		CCV	CCV5	
Metal	True	Results	% Rec	True	Results	% Rec	True	Results	% Rec
Aluminum									
Antimony									
Arsenic	anr								
Barium	anr								
Beryllium									
Boron									
Cadmium	anr								
Calcium									
Chromium	2000	1970	98.5	2000	1970	98.5	2000	1980	99.0
Cobalt									
Copper	anr								
Iron									
Lead	anr								
Magnesium									
Manganese	anr								
Molybdenum									
Nickel	anr								
Potassium	anr								
Selenium	anr								
Silver	anr								
Sodium									
Strontium									
Thallium									
Tin									
Titanium									
Vanadium	anr								
Zinc	anr								

(*) Outside of QC limits
(anr) Analyte not requested

CALIBRATION CHECK STANDARDS SUMMARY
Initial and Continuing Calibration Checks

Login Number: T16448
Account: ITTXHO - Shaw E & I, Inc.
Project: Longhorn Army Ammunition Plant

File ID: IR022807.ASC Date Analyzed: 02/28/07 Methods: SW846 6010B
QC Limits: 90 to 110 % Recovery Run ID: MA2815 Units: ug/l

Time:		18:17			19:20			19:50	
Sample ID:	CCV	CCV6		CCV	CCV7		CCV	CCV8	
Metal	True	Results	% Rec	True	Results	% Rec	True	Results	% Rec
Aluminum									
Antimony									
Arsenic	anr								
Barium	anr								
Beryllium									
Boron									
Cadmium	anr								
Calcium									
Chromium	2000	1980	99.0	2000	1980	99.0	2000	1980	99.0
Cobalt									
Copper	anr								
Iron									
Lead	anr								
Magnesium									
Manganese	anr								
Molybdenum									
Nickel	anr								
Potassium	anr								
Selenium	anr								
Silver	anr								
Sodium									
Strontium									
Thallium									
Tin									
Titanium									
Vanadium	anr								
Zinc	anr								

(*) Outside of QC limits
(anr) Analyte not requested

CALIBRATION CHECK STANDARDS SUMMARY
Initial and Continuing Calibration Checks

Login Number: T16448
Account: ITTXHO - Shaw E & I, Inc.
Project: Longhorn Army Ammunition Plant

File ID: IR022807.ASC Date Analyzed: 02/28/07 Methods: SW846 6010B
QC Limits: 90 to 110 % Recovery Run ID: MA2815 Units: ug/l

Time:		21:13	
Sample ID:	CCV	CCV9	
Metal	True	Results	% Rec
Aluminum			
Antimony			
Arsenic	anr		
Barium	anr		
Beryllium			
Boron			
Cadmium	anr		
Calcium			
Chromium	2000	1990	99.5
Cobalt			
Copper	anr		
Iron			
Lead	anr		
Magnesium			
Manganese	anr		
Molybdenum			
Nickel	anr		
Potassium	anr		
Selenium	anr		
Silver	anr		
Sodium			
Strontium			
Thallium			
Tin			
Titanium			
Vanadium	anr		
Zinc	anr		

(*) Outside of QC limits
(anr) Analyte not requested

HIGH STANDARD CHECK SUMMARY

Login Number: T16448
Account: ITTXHO - Shaw E & I, Inc.
Project: Longhorn Army Ammunition Plant

File ID: IR022807.ASC Date Analyzed: 02/28/07 Methods: SW846 6010B
QC Limits: 95 to 105 % Recovery Run ID: MA2815 Units: ug/l

Time:		11:53	
Sample ID:	HSTD	HSTD1	
Metal	True	Results	% Rec
Aluminum			
Antimony			
Arsenic	anr		
Barium	anr		
Beryllium			
Boron			
Cadmium	anr		
Calcium			
Chromium	4000	4000	100.0
Cobalt			
Copper	anr		
Iron			
Lead	anr		
Magnesium			
Manganese	anr		
Molybdenum			
Nickel	anr		
Potassium	anr		
Selenium	anr		
Silver	anr		
Sodium			
Strontium			
Thallium			
Tin			
Titanium			
Vanadium	anr		
Zinc	anr		

(*) Outside of QC limits
(anr) Analyte not requested

INITIAL LOW CALIBRATION CHECK STANDARD SUMMARY

Login Number: T16448
Account: ITTXHO - Shaw E & I, Inc.
Project: Longhorn Army Ammunition Plant

File ID: IR022807.ASC Date Analyzed: 02/28/07 Methods: SW846 6010B
QC Limits: 80 to 120 % Recovery Run ID: MA2815 Units: ug/l

Time:		12:13	
Sample ID:	CRIB	CRIB1	
Metal	True	Results	% Rec
Aluminum	400		
Antimony	10		
Arsenic	10		
Barium	400		
Beryllium	10		
Boron	200		
Cadmium	8.0		
Calcium	5000		
Chromium	20	20.3	101.5
Cobalt	100		
Copper	50		
Iron	200		
Lead	6.0		
Magnesium	5000		
Manganese	30		
Molybdenum	10		
Nickel	80		
Potassium	5000		
Selenium	10		
Silver	20		
Sodium	5000		
Strontium	20		
Thallium	20		
Tin	20		
Titanium	20		
Vanadium	100		
Zinc	40		

(*) Outside of QC limits
(anr) Analyte not requested

INTERFERING ELEMENT CHECK STANDARDS SUMMARY
Part 1 - ICSA and ICSAB Standards

Login Number: T16448
Account: ITTXHO - Shaw E & I, Inc.
Project: Longhorn Army Ammunition Plant

File ID: IR022807.ASC Date Analyzed: 02/28/07 Methods: SW846 6010B
QC Limits: 80 to 120 % Recovery Run ID: MA2815 Units: ug/l

Time:			12:29		12:36	
Sample ID:	ICSA	ICSAB	ICSA1		ICSAB1	
Metal	True	True	Results	% Rec	Results	% Rec
Aluminum	500000	500000	455000	91.0	455000	91.0
Antimony		1000	0.31		1030	103.0
Arsenic		500	1.3		526	105.2
Barium		500	4.2		555	111.0
Beryllium		500	-0.34		510	102.0
Boron			-41		-40	
Cadmium		1000	-1.2		959	95.9
Calcium	500000	500000	482000	96.4	475000	95.0
Chromium		500	1.3		520	104.0
Cobalt		500	-0.86		504	100.8
Copper		500	1.4		574	114.8
Iron	200000	200000	189000	94.5	186000	93.0
Lead		500	2.7		515	103.0
Magnesium	500000	500000	459000	91.8	456000	91.2
Manganese		500	-7.1		517	103.4
Molybdenum		500	0.36		496	99.2
Nickel		1000	1.7		966	96.6
Potassium			511		492	
Selenium		500	-3.0		505	101.0
Silver		1000	0.16		1100	110.0
Sodium			-340		-350	
Strontium			0.53		0.44	
Thallium		500	-1.3		500	100.0
Tin			-8.9		-9.3	
Titanium			0.020		-0.11	
Vanadium		500	3.8		519	103.8
Zinc		1000	-3.3		1060	106.0

(*) Outside of QC limits
(anr) Analyte not requested

BLANK RESULTS SUMMARY
Part 2 - Method Blanks

Login Number: T16448
Account: ITTXHO - Shaw E & I, Inc.
Project: Longhorn Army Ammunition Plant

QC Batch ID: MP5804
Matrix Type: AQUEOUS

Methods: SW846 6010B
Units: ug/l

Prep Date: 02/27/07

Metal	RL	IDL	MB raw	final
Aluminum	200	51		
Antimony	5.0	1.8		
Arsenic	5.0	1.4	anr	
Barium	200	.1	anr	
Beryllium	5.0	.06		
Boron	100	1.4		
Cadmium	4.0	.5	anr	
Calcium	5000	8		
Chromium	10	.9	-0.12	<10
Cobalt	50	.99		
Copper	25	1.4	anr	
Iron	100	16		
Lead	3.0	.7	anr	
Magnesium	5000	8		
Manganese	15	.2	anr	
Molybdenum	10	.45		
Nickel	40	1	anr	
Potassium	5000	80		
Selenium	5.0	1.7	anr	
Silver	10	.5	anr	
Sodium	5000	160		
Strontium	20	.5		
Thallium	10	1.5		
Tin	20	1.5		
Titanium	20	.5		
Vanadium	50	.4	anr	
Zinc	20	.8	anr	

Associated samples MP5804: T16448-3

Results < IDL are shown as zero for calculation purposes
(*) Outside of QC limits
(anr) Analyte not requested

MATRIX SPIKE AND DUPLICATE RESULTS SUMMARY

Login Number: T16448
Account: ITTXHO - Shaw E & I, Inc.
Project: Longhorn Army Ammunition Plant

QC Batch ID: MP5804
Matrix Type: AQUEOUS

Methods: SW846 6010B
Units: ug/l

Prep Date:			02/27/07					02/27/07	
Metal	T16414-1 Original	DUP	RPD	QC Limits	T16414-1 Original	MS	Spikelot MPTW3	% Rec	QC Limits
Aluminum									
Antimony									
Arsenic	anr								
Barium	anr								
Beryllium									
Boron									
Cadmium	anr								
Calcium									
Chromium	0.0	0.0	NC	0-20	0.0	397	400	99.3	75-125
Cobalt									
Copper	anr								
Iron									
Lead	anr								
Magnesium									
Manganese	anr								
Molybdenum									
Nickel	anr								
Potassium									
Selenium	anr								
Silver	anr								
Sodium									
Strontium									
Thallium									
Tin									
Titanium									
Vanadium	anr								
Zinc	anr								

Associated samples MP5804: T16448-3

Results < IDL are shown as zero for calculation purposes
(*) Outside of QC limits
(N) Matrix Spike Rec. outside of QC limits
(anr) Analyte not requested

MATRIX SPIKE AND DUPLICATE RESULTS SUMMARY

Login Number: T16448
Account: ITTXHO - Shaw E & I, Inc.
Project: Longhorn Army Ammunition Plant

QC Batch ID: MP5804 Methods: SW846 6010B
Matrix Type: AQUEOUS Units: ug/l

Prep Date: 02/27/07

Metal	T16414-1 Original	MSD	Spikelot MPTW3	% Rec	MSD RPD	QC Limit
Aluminum						
Antimony						
Arsenic	anr					
Barium	anr					
Beryllium						
Boron						
Cadmium	anr					
Calcium						
Chromium	0.0	352	400	88.0	12.0	
Cobalt						
Copper	anr					
Iron						
Lead	anr					
Magnesium						
Manganese	anr					
Molybdenum						
Nickel	anr					
Potassium						
Selenium	anr					
Silver	anr					
Sodium						
Strontium						
Thallium						
Tin						
Titanium						
Vanadium	anr					
Zinc	anr					

Associated samples MP5804: T16448-3

Results < IDL are shown as zero for calculation purposes
(*) Outside of QC limits
(N) Matrix Spike Rec. outside of QC limits
(anr) Analyte not requested

SPIKE BLANK AND LAB CONTROL SAMPLE SUMMARY

Login Number: T16448
Account: ITTXHO - Shaw E & I, Inc.
Project: Longhorn Army Ammunition Plant

QC Batch ID: MP5804
Matrix Type: AQUEOUS

Methods: SW846 6010B
Units: ug/l

Prep Date: 02/27/07

Metal	BSP Result	Spikelot MPTW3	% Rec	QC Limits
Aluminum				
Antimony				
Arsenic	anr			
Barium	anr			
Beryllium				
Boron				
Cadmium	anr			
Calcium				
Chromium	407	400	101.8	80-120
Cobalt				
Copper	anr			
Iron				
Lead	anr			
Magnesium				
Manganese	anr			
Molybdenum				
Nickel	anr			
Potassium				
Selenium	anr			
Silver	anr			
Sodium				
Strontium				
Thallium				
Tin				
Titanium				
Vanadium	anr			
Zinc	anr			

Associated samples MP5804: T16448-3

Results < IDL are shown as zero for calculation purposes
(*) Outside of QC limits
(anr) Analyte not requested

SERIAL DILUTION RESULTS SUMMARY

Login Number: T16448
Account: ITTXHO - Shaw E & I, Inc.
Project: Longhorn Army Ammunition Plant

QC Batch ID: MP5804
Matrix Type: AQUEOUS

Methods: SW846 6010B
Units: ug/l

Prep Date: 02/27/07

Metal	T16414-1 Original	SDL 1:5	RPD	QC Limits
Aluminum				
Antimony				
Arsenic	anr			
Barium	anr			
Beryllium				
Boron				
Cadmium	anr			
Calcium				
Chromium	0.00	0.00	NC	0-10
Cobalt				
Copper	anr			
Iron				
Lead	anr			
Magnesium				
Manganese	anr			
Molybdenum				
Nickel	anr			
Potassium				
Selenium	anr			
Silver	anr			
Sodium				
Strontium				
Thallium				
Tin				
Titanium				
Vanadium	anr			
Zinc	anr			

Associated samples MP5804: T16448-3

Results < IDL are shown as zero for calculation purposes
(*) Outside of QC limits
(anr) Analyte not requested

General Chemistry

QC Data Summaries

Includes the following where applicable:

- Method Blank and Blank Spike Summaries
- Duplicate Summaries
- Matrix Spike Summaries
- Instrument Runlogs/QC

METHOD BLANK AND SPIKE RESULTS SUMMARY
GENERAL CHEMISTRY

Login Number: T16448
Account: ITTXHO - Shaw E & I, Inc.
Project: Longhorn Army Ammunition Plant

Analyte	Batch ID	RL	MB Result	Units	Spike Amount	BSP Result	BSP %Recov	QC Limits
Alkalinity, Total as CaCO3	GN11375	5.0	<5.0	mg/l	2500	2500	100.0	80-120%
Chloride	GN11343	1.0	<1.0	mg/l	xxxxxxxx	1020	102.0	92-107%
Nitrogen, Nitrate + Nitrite	GN11301	0.050	<0.050	mg/l	0.500	0.51	102.0	89-112%
Nitrogen, Nitrite	GN11300	0.050	<0.050	mg/l	0.500	0.49	98.0	89-117%
Sulfate	GN11356	10	<10	mg/l	100	95.0	95.0	80-120%
Sulfate	GN11356			mg/l	xxxxxxxx		*	80-120%
Sulfide	GN11313	0.20	<0.20	mg/l	1600	1380	85.0	80-120%
Total Organic Carbon	GN11304	1.0	<1.0	mg/l	25.0	26.0	104.0	83-110%

Associated Samples:
Batch GN11300: T16448-1
Batch GN11301: T16448-1
Batch GN11304: T16448-1, T16448-2
Batch GN11313: T16448-1
Batch GN11343: T16448-1
Batch GN11356: T16448-1
Batch GN11375: T16448-1
(*) Outside of QC limits

DUPLICATE RESULTS SUMMARY
GENERAL CHEMISTRY

Login Number: T16448
Account: ITTXHO - Shaw E & I, Inc.
Project: Longhorn Army Ammunition Plant

Analyte	Batch ID	QC Sample	Units	Original Result	DUP Result	RPD	QC Limits
Alkalinity, Total as CaCO3	GN11375	T16445-5	mg/l	457	457	0.0	0-10%
Chloride	GN11343	T16445-5	mg/l	253	258	2.0	0-5%
Nitrogen, Nitrate + Nitrite	GN11301	T16445-18	mg/l	2.7	2.7	0.0	0-10%
Nitrogen, Nitrite	GN11300	T16445-18	mg/l	0.0030 U	<0.050	0.0	0-10%
Sulfate	GN11356	T16448-1	mg/l	403	436	7.8	0-20%
Sulfide	GN11313	T16445-5	mg/l	0.0 B	<0.20	0.0	0-20%
Total Organic Carbon	GN11304	T16445-18	mg/l	6.0	6.0	0.0	0-11%
pH	GN11334	T16448-1	su	7.1	7.1	0.0	0-6.8%
pH	GN11334	T16448-1	su	7.1	7.1	0.0	0-20%

Associated Samples:
Batch GN11300: T16448-1
Batch GN11301: T16448-1
Batch GN11304: T16448-1, T16448-2
Batch GN11313: T16448-1
Batch GN11334: T16448-1
Batch GN11343: T16448-1
Batch GN11356: T16448-1
Batch GN11375: T16448-1
(*) Outside of QC limits

MATRIX SPIKE RESULTS SUMMARY
GENERAL CHEMISTRY

Login Number: T16448
Account: ITTXHO - Shaw E & I, Inc.
Project: Longhorn Army Ammunition Plant

Analyte	Batch ID	QC Sample	Units	Original Result	Spike Amount	MS Result	%Rec	QC Limits
Alkalinity, Total as CaCO3	GN11375	T16445-5	mg/l	457	125	590	106.0	79-122%
Chloride	GN11343	T16445-5	mg/l	253	xxxxxxxx	462	104.0	81-119%
Nitrogen, Nitrate + Nitrite	GN11301	T16445-18	mg/l	2.7	1.00	3.7	100.0	80-119%
Nitrogen, Nitrite	GN11300	T16445-18	mg/l	0.0030 U	0.100	0.094	94.0	75-134%
Sulfate	GN11356	T16448-1	mg/l	403	250	641	96.0	75-125%
Sulfate	GN11356	T16448-1	mg/l	403	xxxxxxxx		*	75-125%
Total Organic Carbon	GN11304	T16445-18	mg/l	6.0	10.0	16.0	100.0	74-121%

Associated Samples:
Batch GN11300: T16448-1
Batch GN11301: T16448-1
Batch GN11304: T16448-1, T16448-2
Batch GN11343: T16448-1
Batch GN11356: T16448-1
Batch GN11375: T16448-1
(*) Outside of QC limits
(N) Matrix Spike Rec. outside of QC limits

Misc. Forms

Custody Documents and Other Forms

(Accutest Laboratories Southeast, Inc.)

Includes the following where applicable:

- Chain of Custody

CHAIN OF CUSTODY

00096534

ACCUTEST Laboratories T16448

10165 Harwin, Suite 150 - Houston, TX 77036 - 713-271-4700 fax: 713-271-4770

Page 1 of 1

FED-EX Tracking # | Bottle Order Control #

Accutest Quote # | Accutest Job # T16448

Subcontract Information

Company Name: ALSE-ORLANDO

Project Contact:

Address:

City: ORLANDO | State: | Zip:

Phone No.: | Fax No.:

Project Information

Send Report to: Agnesv@accutest.com

Bill to: Accutest Laboratories

Address: 10165 Harwin Drive, Suite 150

City: Houston, TX 77036 | State: | Zip:

Phone No.: 713-271-4700 / 713-271-4770 | Fax No.:

Accutest Purchase Order #:

Requested Analyses

Matrix Codes

DW - Drinking Water
GW - Ground Water
WW - Wastewater
SO - Soil
SL - Sludge
OI - Oil
LIQ - Other Liquid
SOL - Other Solid

Accutest Sample ID	Collection Date	Collection Time	Matrix	# of bottles	Number of preserved bottles: HCl	H2SO4	NaOH	ZnOAc/NaOH	NaHSO4	MeOH	NONE	Methane, Ethane, Ethene (RSK147)	Perchlorates	8330 Explosives	LAB USE ONLY
T16448-1	2/24/2007	1046	GW	3	2						1	X	X		
T16448-2	2/24/2007	1036	GW	3	2						1	X		X	Only 1/2 Liter Rcv'd

Turnaround Time (Business days)

- [XX] 10 Day *STANDARD* — Approved By:/ Date:
- [ ] 5 Day *RUSH*
- [ ] 4 Day *RUSH*
- [ ] 3 Day *EMERGENCY*
- [ ] 2 Day *EMERGENCY*
- [ ] 1 Day *EMERGENCY*
- [ ] Other

Date Deliverable Information

- [ ] Commercial "A"
- [ ] Commercial "B"
- [XX] TRRP 13
- [XX] Reduced Tier1
- [ ] State Forms
- [ ] EDD Format
- [ ] Other

Commercial "A" = Results Only

Commercial "B" = Results & Standard QC

Comments / Remarks

SAMPLE CUSTODY MUST BE DOCUMENTED BELOW EACH TIME SAMPLES CHANGE POSSESSION, INCLUDING COURIER DELIVERY

Relinquished by Sampler:	Date Time:	Received By:	Relinquished By:	Date Time:	Received By:
1		1	2		2
Relinquished by:	Date Time:	Received By:	Relinquished By:	Date Time:	Received By:
3		3	4	2/27/07 17:05	FX
Relinquished by: FX	Date Time: 09:30 02-28-07	Received By: 5	Custody Seals	Preserved where applicable	On Ice / Cooler Temp. 1.8

8.1

8

T16448: Chain of Custody
Page 1 of 2
Accutest Laboratories Southeast, Inc.

00096535

ACCUTEST LABORATORIES SAMPLE RECEIPT CONFIRMATION

ACCUTEST'S JOB NUMBER: T16448 CLIENT: ALGC PROJECT: T1644B

DATE/TIME RECEIVED: 02-28-07 09:30 # OF COOLERS RECEIVED: 1 COOLER TEMPS: 1.8

METHOD OF DELIVERY: (FEDEX) UPS ACCUTEST COURIER GREYHOUND DELIVERY OTHER

AIRBILL NUMBERS: 7986 1726 3905

COOLER INFORMATION

- [ ] CUSTODY SEAL NOT PRESENT OR NOT INTACT
- [ ] CHAIN OF CUSTODY NOT RECEIVED (COC)
- [ ] ANALYSIS REQUESTED IS UNCLEAR OR MISSING
- [ ] SAMPLE DATES OR TIMES UNCLEAR OR MISSING
- [ ] TEMPERATURE CRITERIA NOT MET

TRIP BLANK INFORMATION

- [ ] TRIP BLANK PROVIDED
- [X] TRIP BLANK NOT PROVIDED
- [X] TRIP BLANK NOT ON COC
- [ ] TRIP BLANK INTACT
- [ ] TRIP BLANK NOT INTACT
- [ ] RECEIVED WATER TRIP BLANK
- [ ] RECEIVED SOIL TRIP BLANK

SAMPLE INFORMATION

- [ ] SAMPLE LABELS NOT PRESENT ON ALL BOTTLES
- [ ] CORRECT NUMBER OF CONTAINERS USED
- [ ] SAMPLE RECEIVED IMPROPERLY PRESERVED
- [ ] INSUFFICIENT VOLUME FOR ANALYSIS
- [ ] TIMES ON COC DOES NOT MATCH LABEL(S)
- [ ] ID'S ON COC DOES NOT MATCH LABEL(S)
- [ ] VOC VIALS HAVE HEADSPACE (MACRO BUBBLES)
- [ ] BOTTLES RECEIVED BUT ANALYSIS NOT REQUESTED
- [ ] NO BOTTLES RECEIVED FOR ANALYSIS REQUESTED
- [ ] UNCLEAR FILTERING INSTRUCTIONS
- [ ] UNCLEAR COMPOSITING INSTRUCTIONS
- [ ] SAMPLE CONTAINER(S) RECEIVED BROKEN
- [ ] % SOLIDS JAR NOT RECEIVED
- [ ] 5035 FIELD KIT NOT FROZEN WITHIN 48 HOUR'S
- [ ] RESIDUAL CHLORINE PRESENT

(APPLICABLE TO EPA 600 SERIES OR NORTH CAROLINA ORGANICS)

MISC. INFORMATION

NUMBER OF ENCORES ? 8

NUMBER OF 5035 FIELD KITS ? 8

NUMBER OR LAB FILTERED METALS ? 8

SUMMARY OF COMMENTS: ~~For~~ SAMPLE #2 FOR B330 ANALYSIS BOTTLE RECEIVED ONLY @500ML

TECHNICIAN SIGNATURE/DATE: 02-28-07 TECHNICIAN SIGNATURE/DATE: 2-28-07

ASBD 10/03/06

8.1

8

T16448: Chain of Custody

Page 2 of 2

GC Volatiles

QC Data Summaries

(Accutest Laboratories Southeast, Inc.)

Includes the following where applicable:

- Method Blank Summaries
- Blank Spike Summaries
- Matrix Spike and Duplicate Summaries
- Surrogate Recovery Summaries
- GC Surrogate Retention Time Summaries
- Initial and Continuing Calibration Summaries

Method Blank Summary

Job Number: T16448
Account: ALGC Accutest Laboratories Gulf Coast, Inc.
Project: ITTXHO: Longhorn Army Ammunition Plant

Sample	File ID	DF	Analyzed	By	Prep Date	Prep Batch	Analytical Batch
GXY996-MB	XY025325.D	1	03/08/07	TD	n/a	n/a	GXY996

The QC reported here applies to the following samples: **Method:** RSKSOP-147/175

T16448-1, T16448-2

CAS No.	Compound	Result	RL	MDL	Units	Q
74-82-8	Methane	ND	0.50	0.30	ug/l	
74-84-0	Ethane	ND	1.0	0.60	ug/l	
74-85-1	Ethene	ND	1.0	0.80	ug/l	

Blank Spike Summary

Job Number: T16448
Account: ALGC Accutest Laboratories Gulf Coast, Inc.
Project: ITTXHO: Longhorn Army Ammunition Plant

Sample	File ID	DF	Analyzed	By	Prep Date	Prep Batch	Analytical Batch
GXY996-BS	XY025326.D	1	03/08/07	TD	n/a	n/a	GXY996

The QC reported here applies to the following samples: **Method:** RSKSOP-147/175

T16448-1, T16448-2

CAS No.	Compound	Spike ug/l	BSP ug/l	BSP %	Limits
74-82-8	Methane	108	137	127	54-149
74-84-0	Ethane	219	273	125	57-143
74-85-1	Ethene	290	353	122	57-143

Matrix Spike Summary

Job Number: T16448
Account: ALGC Accutest Laboratories Gulf Coast, Inc.
Project: ITTXHO: Longhorn Army Ammunition Plant

Sample	File ID	DF	Analyzed	By	Prep Date	Prep Batch	Analytical Batch
F47731-7MS	XY025345.D	1	03/08/07	TD	n/a	n/a	GXY996
F47731-7 [a]	XY025344.D	1	03/08/07	TD	n/a	n/a	GXY996

The QC reported here applies to the following samples: **Method:** RSKSOP-147/175

T16448-1, T16448-2

CAS No.	Compound	F47731-7 ug/l	Q	Spike ug/l	MS ug/l	MS %	Limits
74-82-8	Methane	9.31		108	166	145	54-149
74-84-0	Ethane	ND		219	334	153*	57-143
74-85-1	Ethene	ND		290	435	150*	57-143

(a) Confirmation run.

Duplicate Summary

Job Number: T16448
Account: ALGC Accutest Laboratories Gulf Coast, Inc.
Project: ITTXHO: Longhorn Army Ammunition Plant

Sample	File ID	DF	Analyzed	By	Prep Date	Prep Batch	Analytical Batch
F47769-9DUP	XY025351.D	1	03/08/07	TD	n/a	n/a	GXY996
F47769-9	XY025350.D	1	03/08/07	TD	n/a	n/a	GXY996

The QC reported here applies to the following samples: **Method:** RSKSOP-147/175

T16448-1, T16448-2

CAS No.	Compound	F47769-9 ug/l	Q	DUP ug/l	Q	RPD	Limits
74-82-8	Methane	ND		ND		nc	24
74-84-0	Ethane	ND		ND		nc	23
74-85-1	Ethene	ND		ND		nc	10

Initial Calibration Summary

Job Number: T16448
Account: ALGC Accutest Laboratories Gulf Coast, Inc.
Project: ITTXHO: Longhorn Army Ammunition Plant

Sample: GXY995-ICC995
Lab FileID: XY025305.D

Response Factor Report VOA5

Method : C:\HPCHEM\2\METHODS\RSK147XY.M (Chemstation Integrator)
Title : Dissolved Gases in Water
Last Update : Thu Mar 08 08:31:33 2007
Response via : Initial Calibration

Calibration Files
1 =XY025301.D 2 =XY025302.D 3 =XY025304.D 4 =XY025303.D
5 =XY025305.D 6 =XY025306.D 7 =XY025307.D

Compound	1	2	3	4	5	6	7	Avg	%RSD
1)c Methane	1.256	2.507	1.576	0.832	1.293	0.961	1.016	1.349 E4	42.09#

---- Linear regr., Force(0,0) ---- Coefficient = 0.9983
Response Ratio = 0.00000 + 10071.12721 *A

2)c Ethylene	2.402	4.239	2.629	1.419	2.516	1.854	1.947	2.429 E4	37.22#

---- Linear regr., Force(0,0) ---- Coefficient = 0.9982
Response Ratio = 0.00000 + 19323.23175 *A

3)c Ethane	2.241	3.960	2.584	1.355	2.483	1.825	1.918	2.338 E4	35.47#

---- Linear regr., Force(0,0) ---- Coefficient = 0.9981
Response Ratio = 0.00000 + 19028.53933 *A

(#) = Out of Range

RSK147XY.M Thu Mar 08 08:36:38 2007

Initial Calibration Verification

Job Number: T16448
Account: ALGC Accutest Laboratories Gulf Coast, Inc.
Project: ITTXHO: Longhorn Army Ammunition Plant

Sample: GXY995-ICV995
Lab FileID: XY025308.D

Evaluate Continuing Calibration Report

Data File : C:\HPCHEM\2\DATA\030707\XY025308.D Vial: 100
Acq On : 7 Mar 2007 2:55 pm Operator: Trangd
Sample : ICV995-1000 Inst : VOA5
Misc : gc7128,gxy995,,,,, Multiplr: 1.00
IntFile : EVENTS.E

Method : C:\HPCHEM\2\METHODS\RSK147XY.M (Chemstation Integrator)
Title : Dissolved Gases in Water
Last Update : Thu Mar 08 08:31:33 2007
Response via : Multiple Level Calibration

Min. RRF : 0.000 Min. Rel. Area : 50% Max. R.T. Dev 0.50min
Max. RRF Dev : 30% Max. Rel. Area : 150%

	Compound	Amount	Calc.	%Drift	Area%	Dev(min)	RT Window
		Amount	Calc.	%Drift			
1 c	Methane	1000.000	950.295	5.0	74	-0.06	1.13- 1.73
2 c	Ethylene	1000.000	962.910	3.7	74	-0.03	2.85- 3.65
3 c	Ethane	1000.000	991.839	0.8	76	-0.03	3.48- 4.28

(#) = Out of Range SPCC's out = 0 CCC's out = 0
XY025305.D RSK147XY.M Thu Mar 08 08:35:31 2007

Continuing Calibration Summary

Job Number: T16448
Account: ALGC Accutest Laboratories Gulf Coast, Inc.
Project: ITTXHO: Longhorn Army Ammunition Plant

Sample: GXY996-CC995
Lab FileID: XY025323.D

Evaluate Continuing Calibration Report

Data File : C:\HPCHEM\2\DATA\030807\XY025323.D Vial: 100
Acq On : 8 Mar 2007 8:42 am Operator: Trangd
Sample : CC995-1000 Inst : VOA5
Misc : gc7128,gxy996,,,,, Multiplr: 1.00
IntFile : EVENTS.E

Method : C:\HPCHEM\2\METHODS\RSK147XY.M (Chemstation Integrator)
Title : Dissolved Gases in Water
Last Update : Fri Mar 09 08:55:16 2007
Response via : Multiple Level Calibration

Min. RRF : 0.000 Min. Rel. Area : 50% Max. R.T. Dev 0.50min
Max. RRF Dev : 30% Max. Rel. Area : 150%

	Compound	Amount	Calc.	%Drift	Area%	Dev(min)	RT Window
		Amount	Calc.	%Drift			
1 c	Methane	1000.000	957.766	4.2	75	0.04	1.09- 1.69
2 c	Ethylene	1000.000	988.131	1.2	76	0.07	2.80- 3.60
3 c	Ethane	1000.000	983.846	1.6	75	0.08	3.43- 4.23

(#) = Out of Range SPCC's out = 0 CCC's out = 0
XY025305.D RSK147XY.M Fri Mar 09 09:33:39 2007

Continuing Calibration Summary

Job Number: T16448
Account: ALGC Accutest Laboratories Gulf Coast, Inc.
Project: ITTXHO: Longhorn Army Ammunition Plant

Sample: GXY996-CC995
Lab FileID: XY025334.D

Evaluate Continuing Calibration Report

Data File : C:\HPCHEM\2\DATA\030807\XY025334.D Vial: 100
Acq On : 8 Mar 2007 11:32 am Operator: Trangd
Sample : CC995-500 Inst : VOA5
Misc : gc7128,gxy996,,,,, Multiplr: 1.00
IntFile : EVENTS.E

Method : C:\HPCHEM\2\METHODS\RSK147XY.M (Chemstation Integrator)
Title : Dissolved Gases in Water
Last Update : Fri Mar 09 08:55:16 2007
Response via : Multiple Level Calibration

Min. RRF : 0.000 Min. Rel. Area : 50% Max. R.T. Dev 0.50min
Max. RRF Dev : 30% Max. Rel. Area : 150%

	Compound	Amount	Calc.	%Drift	Area%	Dev(min)	RT Window
		Amount	Calc.	%Drift			
1 c	Methane	500.000	435.207	13.0	105	0.00	1.09- 1.69
2 c	Ethylene	500.000	443.798	11.2	121	0.00	2.80- 3.60
3 c	Ethane	500.000	437.136	12.6	123	0.00	3.43- 4.23

(#) = Out of Range SPCC's out = 0 CCC's out = 0
XY025303.D RSK147XY.M Fri Mar 09 09:34:49 2007

Continuing Calibration Summary

Job Number: T16448
Account: ALGC Accutest Laboratories Gulf Coast, Inc.
Project: ITTXHO: Longhorn Army Ammunition Plant

Sample: GXY996-CC995
Lab FileID: XY025346.D

Evaluate Continuing Calibration Report

Data File : C:\HPCHEM\2\DATA\030807\XY025346.D Vial: 100
Acq On : 8 Mar 2007 4:17 pm Operator: Trangd
Sample : CC995-1000 Inst : VOA5
Misc : gc7142,gxy996,,,,, Multiplr: 1.00
IntFile : EVENTS.E

Method : C:\HPCHEM\2\METHODS\RSK147XY.M (Chemstation Integrator)
Title : Dissolved Gases in Water
Last Update : Fri Mar 09 08:55:16 2007
Response via : Multiple Level Calibration

Min. RRF : 0.000 Min. Rel. Area : 50% Max. R.T. Dev 0.50min
Max. RRF Dev : 30% Max. Rel. Area : 150%

	Compound	Amount	Calc.	%Drift	Area% Dev(min)	RT Window
		Amount	Calc.	%Drift		
1 c	Methane	1000.000	1110.796	-11.1	87 0.00	1.09- 1.69
2 c	Ethylene	1000.000	1155.448	-15.5	89 0.00	2.80- 3.60
3 c	Ethane	1000.000	1156.356	-15.6	89 0.00	3.43- 4.23

(#) = Out of Range SPCC's out = 0 CCC's out = 0
XY025305.D RSK147XY.M Fri Mar 09 09:33:39 2007

Continuing Calibration Summary

Job Number: T16448
Account: ALGC Accutest Laboratories Gulf Coast, Inc.
Project: ITTXHO: Longhorn Army Ammunition Plant

Sample: GXY996-ECC995
Lab FileID: XY025352.D

Evaluate Continuing Calibration Report

Data File : C:\HPCHEM\2\DATA\030807\XY025352.D Vial: 100
Acq On : 8 Mar 2007 5:34 pm Operator: Trangd
Sample : ECC995-1000 Inst : VOA5
Misc : gc7142,gxy996,,,,, Multiplr: 1.00
IntFile : EVENTS.E

Method : C:\HPCHEM\2\METHODS\RSK147XY.M (Chemstation Integrator)
Title : Dissolved Gases in Water
Last Update : Fri Mar 09 08:55:16 2007
Response via : Multiple Level Calibration

Min. RRF : 0.000 Min. Rel. Area : 50% Max. R.T. Dev 0.50min
Max. RRF Dev : 30% Max. Rel. Area : 150%

	Compound	Amount	Calc.	%Drift	Area%	Dev(min)	RT Window
		Amount	Calc.	%Drift			
1 c	Methane	1000.000	1104.999	-10.5	86	0.00	1.09- 1.69
2 c	Ethylene	1000.000	1148.251	-14.8	88	0.01	2.80- 3.60
3 c	Ethane	1000.000	1151.972	-15.2	88	0.01	3.43- 4.23

(#) = Out of Range SPCC's out = 0 CCC's out = 0
XY025305.D RSK147XY.M Fri Mar 09 09:33:40 2007

GC Semi-volatiles

QC Data Summaries

(Accutest Laboratories Southeast, Inc.)

Includes the following where applicable:

- Method Blank Summaries
- Blank Spike Summaries
- Matrix Spike and Duplicate Summaries
- Surrogate Recovery Summaries
- GC Surrogate Retention Time Summaries
- Initial and Continuing Calibration Summaries

Method Blank Summary

Job Number: T16448
Account: ALGC Accutest Laboratories Gulf Coast, Inc.
Project: ITTXHO: Longhorn Army Ammunition Plant

Sample	File ID	DF	Analyzed	By	Prep Date	Prep Batch	Analytical Batch
OP19677-MB	GG020203.D	1	03/02/07	MRE	03/01/07	OP19677	GGG906

The QC reported here applies to the following samples: **Method:** SW846 8330A

T16448-2

CAS No.	Compound	Result	RL	MDL	Units	Q
2691-41-0	HMX	ND	0.20	0.060	ug/l	
121-82-4	RDX	ND	0.20	0.075	ug/l	
99-65-0	1,3-Dinitrobenzene	ND	0.20	0.070	ug/l	
606-20-2	2,6-Dinitrotoluene	ND	0.20	0.065	ug/l	
121-14-2	2,4-Dinitrotoluene	ND	0.20	0.075	ug/l	
35572-78-2	2-amino-4,6-Dinitrotoluene	ND	0.20	0.070	ug/l	
19406-51-0	4-amino-2,6-Dinitrotoluene	ND	0.20	0.080	ug/l	
98-95-3	Nitrobenzene	ND	0.20	0.060	ug/l	
88-72-2	o-Nitrotoluene	ND	0.20	0.060	ug/l	
99-08-1	m-Nitrotoluene	ND	0.20	0.075	ug/l	
99-99-0	p-Nitrotoluene	ND	0.20	0.075	ug/l	
479-45-8	Tetryl	ND	0.20	0.075	ug/l	
99-35-4	1,3,5-Trinitrobenzene	ND	0.20	0.095	ug/l	
118-96-7	2,4,6-Trinitrotoluene	ND	0.20	0.080	ug/l	

CAS No.	Surrogate Recoveries		Limits
610-39-9	3,4-Dinitrotoluene	102%	70-136%

Method Blank Summary

Job Number: T16448
Account: ALGC Accutest Laboratories Gulf Coast, Inc.
Project: ITTXHO: Longhorn Army Ammunition Plant

Sample	File ID	DF	Analyzed	By	Prep Date	Prep Batch	Analytical Batch
OP19677-MB	GG020233.D	1	03/05/07	MRE	03/01/07	OP19677	GGG907

The QC reported here applies to the following samples: **Method:** SW846 8330A

T16448-2

CAS No.	Compound	Result	RL	MDL	Units	Q
2691-41-0	HMX	ND	0.20	0.060	ug/l	
121-82-4	RDX	ND	0.20	0.075	ug/l	
99-65-0	1,3-Dinitrobenzene	ND	0.20	0.070	ug/l	
606-20-2	2,6-Dinitrotoluene	ND	0.20	0.065	ug/l	
121-14-2	2,4-Dinitrotoluene	ND	0.20	0.075	ug/l	
35572-78-2	2-amino-4,6-Dinitrotoluene	ND	0.20	0.070	ug/l	
19406-51-0	4-amino-2,6-Dinitrotoluene	ND	0.20	0.080	ug/l	
98-95-3	Nitrobenzene	ND	0.20	0.060	ug/l	
88-72-2	o-Nitrotoluene	ND	0.20	0.060	ug/l	
99-08-1	m-Nitrotoluene	ND	0.20	0.075	ug/l	
99-99-0	p-Nitrotoluene	ND	0.20	0.075	ug/l	
479-45-8	Tetryl	ND	0.20	0.075	ug/l	
99-35-4	1,3,5-Trinitrobenzene	ND	0.20	0.095	ug/l	
118-96-7	2,4,6-Trinitrotoluene	ND	0.20	0.080	ug/l	

CAS No.	Surrogate Recoveries		Limits
610-39-9	3,4-Dinitrotoluene	80%	70-136%

Blank Spike Summary

Job Number: T16448
Account: ALGC Accutest Laboratories Gulf Coast, Inc.
Project: ITTXHO: Longhorn Army Ammunition Plant

Sample	File ID	DF	Analyzed	By	Prep Date	Prep Batch	Analytical Batch
OP19677-BS	GG020202.D	1	03/02/07	MRE	03/01/07	OP19677	GGG906

The QC reported here applies to the following samples: **Method:** SW846 8330A

T16448-2

CAS No.	Compound	Spike ug/l	BSP ug/l	BSP %	Limits
2691-41-0	HMX	5	5.3	106	74-152
121-82-4	RDX	5	5.4	108	80-124
99-65-0	1,3-Dinitrobenzene	5	5.3	106	84-123
606-20-2	2,6-Dinitrotoluene	5	5.3	106	84-133
121-14-2	2,4-Dinitrotoluene	5	5.1	102	77-116
35572-78-2	2-amino-4,6-Dinitrotoluene	5	5.2	104	78-117
19406-51-0	4-amino-2,6-Dinitrotoluene	5	5.1	102	84-123
98-95-3	Nitrobenzene	5	5.5	110	76-128
88-72-2	o-Nitrotoluene	5	5.0	100	76-120
99-08-1	m-Nitrotoluene	5	5.2	104	74-124
99-99-0	p-Nitrotoluene	5	5.3	106	81-125
479-45-8	Tetryl	5	4.6	92	62-117
99-35-4	1,3,5-Trinitrobenzene	5	5.3	106	85-127
118-96-7	2,4,6-Trinitrotoluene	5	5.3	106	71-128

CAS No.	Surrogate Recoveries	BSP	Limits
610-39-9	3,4-Dinitrotoluene	124%	70-136%

Blank Spike Summary

Job Number: T16448
Account: ALGC Accutest Laboratories Gulf Coast, Inc.
Project: ITTXHO: Longhorn Army Ammunition Plant

Sample	File ID	DF	Analyzed	By	Prep Date	Prep Batch	Analytical Batch
OP19677-BS	GG020232.D	1	03/05/07	MRE	03/01/07	OP19677	GGG907

The QC reported here applies to the following samples: **Method:** SW846 8330A

T16448-2

CAS No.	Compound	Spike ug/l	BSP ug/l	BSP %	Limits
2691-41-0	HMX	5	5.9	118	74-152
121-82-4	RDX	5	5.5	110	80-124
99-65-0	1,3-Dinitrobenzene	5	5.3	106	84-123
606-20-2	2,6-Dinitrotoluene	5	5.1	102	84-133
121-14-2	2,4-Dinitrotoluene	5	5.1	102	77-116
35572-78-2	2-amino-4,6-Dinitrotoluene	5	5.2	104	78-117
19406-51-0	4-amino-2,6-Dinitrotoluene	5	5.1	102	84-123
98-95-3	Nitrobenzene	5	6.4	128	76-128
88-72-2	o-Nitrotoluene	5	5.0	100	76-120
99-08-1	m-Nitrotoluene	5	5.3	106	74-124
99-99-0	p-Nitrotoluene	5	5.3	106	81-125
479-45-8	Tetryl	5	4.6	92	62-117
99-35-4	1,3,5-Trinitrobenzene	5	5.5	110	85-127
118-96-7	2,4,6-Trinitrotoluene	5	5.7	114	71-128

CAS No.	Surrogate Recoveries	BSP	Limits
610-39-9	3,4-Dinitrotoluene	100%	70-136%

Matrix Spike/Matrix Spike Duplicate Summary

Job Number: T16448
Account: ALGC Accutest Laboratories Gulf Coast, Inc.
Project: ITTXHO: Longhorn Army Ammunition Plant

Sample	File ID	DF	Analyzed	By	Prep Date	Prep Batch	Analytical Batch
OP19677-MS	GG020207.D	1	03/02/07	MRE	03/01/07	OP19677	GGG906
OP19677-MSD	GG020208.D	1	03/02/07	MRE	03/01/07	OP19677	GGG906
F47539-3	GG020206.D	1	03/02/07	MRE	03/01/07	OP19677	GGG906

The QC reported here applies to the following samples: **Method:** SW846 8330A

T16448-2

CAS No.	Compound	F47539-3 ug/l	Q	Spike ug/l	MS ug/l	MS %	MSD ug/l	MSD %	RPD	Limits Rec/RPD
2691-41-0	HMX	ND		10	11.0	110	11.8	118	7	74-152/21
121-82-4	RDX	ND		10	10.3	103	10.7	107	4	80-124/20
99-65-0	1,3-Dinitrobenzene	ND		10	10.3	103	10.9	109	6	84-123/23
606-20-2	2,6-Dinitrotoluene	ND		10	9.9	99	10.6	106	7	84-133/23
121-14-2	2,4-Dinitrotoluene	ND		10	9.7	97	10.3	103	6	77-116/26
35572-78-2	2-amino-4,6-Dinitrotoluene	ND		10	9.4	94	10.5	105	11	78-117/28
19406-51-0	4-amino-2,6-Dinitrotoluene	ND		10	9.1	91	10.2	102	11	84-123/27
98-95-3	Nitrobenzene	ND		10	10.5	105	11.1	111	6	76-128/28
88-72-2	o-Nitrotoluene	ND		10	9.3	93	10.2	102	9	76-120/30
99-08-1	m-Nitrotoluene	ND		10	9.5	95	10.6	106	11	74-124/32
99-99-0	p-Nitrotoluene	ND		10	9.7	97	10.7	107	10	81-125/34
479-45-8	Tetryl	ND		10	7.4	74	7.9	79	7	62-117/28
99-35-4	1,3,5-Trinitrobenzene	ND		10	9.8	98	10.4	104	6	85-127/21
118-96-7	2,4,6-Trinitrotoluene	ND		10	9.8	98	10.4	104	6	71-128/21

CAS No.	Surrogate Recoveries	MS	MSD	F47539-3	Limits
610-39-9	3,4-Dinitrotoluene	94%	98%	102%	70-136%

10.3 10

Semivolatile Surrogate Recovery Summary

Job Number: T16448
Account: ALGC Accutest Laboratories Gulf Coast, Inc.
Project: ITTXHO: Longhorn Army Ammunition Plant

Method: SW846 8330A **Matrix:** AQ

Samples and QC shown here apply to the above method

Lab Sample ID	Lab File ID	S1 [a]
T16448-2	GG020223.D	95.0
OP19677-BS	GG020202.D	124.0
OP19677-BS	GG020232.D	100.0
OP19677-MB	GG020203.D	102.0
OP19677-MB	GG020233.D	80.0
OP19677-MS	GG020207.D	94.0
OP19677-MSD	GG020208.D	98.0

Surrogate Compounds	Recovery Limits
S1 = 3,4-Dinitrotoluene	70-136%

(a) Recovery from GC signal #1

GC Surrogate Retention Time Summary

Job Number: T16448
Account: ALGC Accutest Laboratories Gulf Coast, Inc.
Project: ITTXHO: Longhorn Army Ammunition Plant

Check Std:	GGG906-CC825	**Injection Date:**	03/02/07
Lab File ID:	GG020201.D	**Injection Time:**	16:17
Instrument ID:	GCGG	**Method:**	SW846 8330A

	S1 [a] **RT**
Check Std	13.50

Lab Sample ID	**Lab File ID**	**Date Analyzed**	**Time Analyzed**	**S1** [a] **RT**
OP19677-BS	GG020202.D	03/02/07	16:45	13.49
OP19677-MB	GG020203.D	03/02/07	17:12	13.50
ZZZZZZ	GG020204.D	03/02/07	17:27	13.50
ZZZZZZ	GG020205.D	03/02/07	17:54	13.50
F47539-3	GG020206.D	03/02/07	18:22	13.49
OP19677-MS	GG020207.D	03/02/07	18:50	13.47
OP19677-MSD	GG020208.D	03/02/07	19:17	13.46
ZZZZZZ	GG020209.D	03/02/07	19:45	13.47
ZZZZZZ	GG020210.D	03/02/07	20:12	13.44
ZZZZZZ	GG020211.D	03/02/07	20:40	13.43

Surrogate Compounds

S1 = 3,4-Dinitrotoluene

(a) Retention time from GC signal #1

GC Surrogate Retention Time Summary

Job Number: T16448
Account: ALGC Accutest Laboratories Gulf Coast, Inc.
Project: ITTXHO: Longhorn Army Ammunition Plant

Check Std:	GGG906-CC825	**Injection Date:**	03/02/07
Lab File ID:	GG020212.D	**Injection Time:**	21:07
Instrument ID:	GCGG	**Method:**	SW846 8330A

	S1 [a] **RT**
Check Std	13.45

Lab Sample ID	**Lab File ID**	**Date Analyzed**	**Time Analyzed**	**S1** [a] **RT**
ZZZZZZ	GG020214.D	03/02/07	22:03	13.44
ZZZZZZ	GG020215.D	03/02/07	22:30	13.42
ZZZZZZ	GG020216.D	03/02/07	22:58	13.43
ZZZZZZ	GG020217.D	03/02/07	23:25	13.43
ZZZZZZ	GG020218.D	03/02/07	23:53	13.43
ZZZZZZ	GG020219.D	03/03/07	00:20	13.40
ZZZZZZ	GG020220.D	03/03/07	00:48	13.42
ZZZZZZ	GG020221.D	03/03/07	01:16	13.43
ZZZZZZ	GG020222.D	03/03/07	01:43	13.41
T16448-2	GG020223.D	03/03/07	02:11	13.42

Surrogate Compounds

S1 = 3,4-Dinitrotoluene

(a) Retention time from GC signal #1

GC Surrogate Retention Time Summary

Job Number: T16448
Account: ALGC Accutest Laboratories Gulf Coast, Inc.
Project: ITTXHO: Longhorn Army Ammunition Plant

Check Std:	GGG907-CC827	**Injection Date:**	03/05/07
Lab File ID:	GG020231.D	**Injection Time:**	13:23
Instrument ID:	GCGG	**Method:**	SW846 8330A

	S1 [a] RT	S1 [b] RT
Check Std	10.72	10.72

Lab Sample ID	Lab File ID	Date Analyzed	Time Analyzed	S1 [a] RT	S1 [b] RT
OP19677-BS	GG020232.D	03/05/07	13:43	10.72	
OP19677-MB	GG020233.D	03/05/07	14:02	10.72	
ZZZZZZ	GG020234.D	03/05/07	14:22	10.72	
ZZZZZZ	GG020236.D	03/05/07	15:01	10.71	
GGG907-ECC827	GG020238.D	03/05/07	15:40	10.72	10.72

Surrogate Compounds

S1 = 3,4-Dinitrotoluene

(a) Retention time from GC signal #1
(b) Retention time from GC signal #2

Initial Calibration Summary

Job Number: T16448
Account: ALGC Accutest Laboratories Gulf Coast, Inc.
Project: ITTXHO: Longhorn Army Ammunition Plant

Sample: GGG825-ICC825
Lab FileID: GG018282.D

Response Factor Report G1315B

Method : C:\HPCHEM\1\METHODS\8330_EX.M (Chemstation Integrator)
Title : Explosives by 8330
Last Update : Thu Oct 19 11:32:41 2006
Response via : Initial Calibration

Calibration Files
20 =GG018279.D 100 =GG018280.D 250 =GG018281.D 500 =GG018282.D
750 =GG018283.D 1000=GG018284.D 2000=GG018285.D ICV =GG018286.D

Compound	20	100	250	500	750	1000	2000	ICV	Avg	%RSD
1) HMX	2.870	2.789	2.757	2.694	2.719	2.735	2.786		2.764 E3	2.09
2) TNX	5.916	6.424	6.486	6.331	6.453	6.468	6.587		6.381 E3	3.43
3) DNX	4.900	5.156	5.125	4.986	5.037	5.057	5.155		5.059 E3	1.88
4) MNX	4.909	4.991	4.972	4.807	4.886	4.901	4.995		4.923 E3	1.38
5) RDX	3.185	3.565	3.625	3.500	3.554	3.547	3.609		3.512 E3	4.27
6) 1,3,5-Trinit	7.763	7.813	7.689	7.436	7.595	7.612	7.763		7.667 E3	1.70
7) 1,3-Dinitrob	1.069	1.070	1.060	1.029	1.047	1.051	1.071		1.057 E4	1.49
8) Tetryl	6.130	6.168	6.180	6.004	6.091	6.096	6.221		6.127 E3	1.17
9) Nitrobenzene	7.057	7.032	7.019	6.708	6.915	6.920	7.082		6.962 E3	1.85
10) 3,4-Dinitrot	4.667	4.752	4.687	4.537	4.621	4.631	4.731		4.661 E3	1.56
11) 2,4,6-Trinit	7.275	7.409	7.373	7.143	7.282	7.301	7.456		7.320 E3	1.42
12) 4-Amino-2,6-	5.266	5.304	5.264	5.117	5.194	5.220	5.330		5.242 E3	1.37
13) 2-Amino-4,6-	7.249	7.203	7.187	7.006	7.130	7.155	7.311		7.177 E3	1.35
14) 2,6-Dinitrot	5.524	5.133	5.010	4.844	4.942	4.954	5.071		5.068 E3	4.37
15) 2,4-Dinitrot	1.149	1.009	0.992	0.958	0.976	0.978	0.999		1.009 E4	6.36
16) o-Nitrotolue	5.044	4.558	4.542	4.244	4.403	4.414	4.516		4.532 E3	5.53
17) p-Nitrotolue	4.102	3.815	3.790	3.596	3.734	3.734	3.831		3.800 E3	4.06
18) m-Nitrotolue	4.959	4.808	4.856	4.629	4.803	4.812	4.942		4.830 E3	2.26

Signal #2

1) HMX	8.151	8.148	8.190	8.012	8.090	8.092	8.238		8.132 E3	0.91
2) TNX	0.956	0.980	0.995	0.969	0.984	0.985	1.001		0.981 E4	1.55
3) DNX	7.525	8.044	8.332	7.974	7.996	7.991	8.136		8.000 E3	3.05
4) MNX	7.756	7.781	7.940	7.696	7.742	7.746	7.895		7.794 E3	1.14
5) RDX	4.720	5.727	5.947	5.855	5.997	5.944	6.042		5.748 E3	8.08
6) 1,3,5-Trinit	1.479	1.619	1.553	1.513	1.538	1.540	1.572		1.545 E4	2.85
7) 1,3-Dinitrob	1.225	1.286	1.279	1.246	1.265	1.272	1.295		1.267 E4	1.91
8) Tetryl	1.037	1.106	1.123	1.092	1.106	1.105	1.129		1.100 E4	2.76
9) Nitrobenzene	3.263	3.394	3.343	3.176	3.205	3.190	3.274		3.264 E3	2.50
10) 3,4-Dinitrot	6.324	6.522	6.468	6.218	6.242	6.243	6.394		6.344 E3	1.89
11) 2,4,6-Trinit	1.070	1.106	1.085	1.048	1.060	1.064	1.089		1.075 E4	1.85
12) 4-Amino-2,6-	1.430	1.457	1.434	1.391	1.407	1.413	1.444		1.425 E4	1.62
13) 2-Amino-4,6-	1.240	1.240	1.201	1.171	1.189	1.194	1.223		1.208 E4	2.20
14) 2,6-Dinitrot	8.005	7.244	6.878	6.645	6.758	6.778	6.958		7.038 E3	6.64
15) 2,4-Dinitrot	1.102	0.930	0.906	0.880	0.888	0.892	0.911		0.930 E4	8.36
16) o-Nitrotolue	5.194	4.804	4.848	4.493	4.691	4.697	4.799		4.789 E3	4.46
17) p-Nitrotolue	7.934	7.544	7.631	7.143	7.472	7.477	7.640		7.549 E3	3.15
18) m-Nitrotolue	6.835	7.097	7.192	6.782	7.103	7.117	7.290		7.060 E3	2.62

(#) = Out of Range ### Number of calibration levels exceeded format ###

8330_EX.M Fri Oct 20 16:25:52 2006

Initial Calibration Verification

Job Number: T16448
Account: ALGC Accutest Laboratories Gulf Coast, Inc.
Project: ITTXHO: Longhorn Army Ammunition Plant

Sample: GGG825-ICV825
Lab FileID: GG018286.D

Evaluate Continuing Calibration Report

Signal #1 : G:\HPCHEM\1\DATA\1018ODS\GG018286.D\dad1B.ch Vial: 10
Signal #2 : G:\HPCHEM\1\DATA\1018ODS\GG018286.D\dad1A.ch
Acq On : 18-Oct-2006, 17:39:03 Operator: MIKEE
Sample : ICV825-500 Inst : G1315B
Misc : OP18202,ggg825,1000,,,10,,water Multiplr: 1.00
IntFile Signal #1: EVENTS.E IntFile Signal #2: EVENTS2.E

Method : C:\HPCHEM\1\METHODS\8330_EX.M (Chemstation Integrator)
Title : Explosives by 8330
Last Update : Thu Oct 19 11:32:41 2006
Response via : Multiple Level Calibration

Min. RRF : 0.000 Min. Rel. Area : 50% Max. R.T. Dev 0.50min
Max. RRF Dev : 15% Max. Rel. Area : 200%

	Compound	Amount	Calc.	%Drift	Area%	Dev(min)	RT Window
1	HMX	500.000	531.119	-6.2	0	0.00	3.83- 4.83
2	TNX		----------NA----------				
3	DNX		----------NA----------				
4	MNX		----------NA----------				
5	RDX	500.000	507.091	-1.4	0	0.00	6.10- 7.10
6	1,3,5-Trinitrobenzene	500.000	533.853	-6.8	0	0.00	8.41- 9.41
7	1,3-Dinitrobenzene	500.000	523.924	-4.8	0	0.00	10.38-11.38
8	Tetryl	500.000	484.365	3.1	0	0.00	11.18-12.18
9	Nitrobenzene	500.000	531.046	-6.2	0	0.00	11.86-12.86
10 S	3,4-Dinitrotoluene		----------NA----------				
11	2,4,6-Trinitrotoluene	500.000	507.486	-1.5	0	0.00	13.56-14.56
12	4-Amino-2,6-Dinitrotol	500.000	515.885	-3.2	0	0.00	14.25-15.25
13	2-Amino-4,6-Dinitrotol	500.000	480.846	3.8	0	0.00	15.03-16.03
14	2,6-Dinitrotoluene	500.000	496.634	0.7	0	0.00	16.01-17.01
15	2,4-Dinitrotoluene	500.000	502.401	-0.5	0	0.00	16.52-17.52
16	o-Nitrotoluene	500.000	501.204	-0.2	0	0.00	19.59-20.59
17	p-Nitrotoluene	500.000	520.375	-4.1	0	0.00	20.92-21.92
18	m-Nitrotoluene	500.000	509.118	-1.8	0	0.00	22.61-23.61

***** Signal #2 *****

1	HMX	500.000	537.899	-7.6	0	0.00	3.83- 4.83
2	TNX		----------NA----------				
3	DNX		----------NA----------				
4	MNX		----------NA----------				
5	RDX	500.000	525.299	-5.1	0	0.00	6.10- 7.10
6	1,3,5-Trinitrobenzene	500.000	533.889	-6.8	0	0.00	8.41- 9.41
7	1,3-Dinitrobenzene	500.000	529.524	-5.9	0	0.00	10.38-11.38
8	Tetryl	500.000	489.295	2.1	0	0.00	11.18-12.18
9	Nitrobenzene	500.000	531.782	-6.4	0	0.00	11.86-12.86
10 S	3,4-Dinitrotoluene		----------NA----------				
11	2,4,6-Trinitrotoluene	500.000	505.844	-1.2	0	0.00	13.56-14.56
12	4-Amino-2,6-Dinitrotol	500.000	516.203	-3.2	0	0.00	14.25-15.25
13	2-Amino-4,6-Dinitrotol	500.000	480.458	3.9	0	0.00	15.03-16.03
14	2,6-Dinitrotoluene	500.000	493.423	1.3	0	0.00	16.01-17.01
15	2,4-Dinitrotoluene	500.000	499.987	0.0	0	0.00	16.52-17.52
16	o-Nitrotoluene	500.000	503.639	-0.7	0	0.00	19.59-20.59
17	p-Nitrotoluene	500.000	523.730	-4.7	0	0.00	20.92-21.92
18	m-Nitrotoluene	500.000	512.492	-2.5	0	0.00	22.61-23.61

Initial Calibration Verification

Job Number: T16448
Account: ALGC Accutest Laboratories Gulf Coast, Inc.
Project: ITTXHO: Longhorn Army Ammunition Plant

Sample: GGG825-ICV825
Lab FileID: GG018286.D

(#) = Out of Range SPCC's out = 0 CCC's out = 0
GG018286.D 8330_EX.M Fri Oct 20 16:26:22 2006

Initial Calibration Verification

Job Number: T16448
Account: ALGC Accutest Laboratories Gulf Coast, Inc.
Project: ITTXHO: Longhorn Army Ammunition Plant

Sample: GGG826-ICV825
Lab FileID: GG018300.D

Evaluate Continuing Calibration Report

Signal #1 : G:\HPCHEM\1\DATA\1019ODS\GG018300.D\dad1B.ch Vial: 4
Signal #2 : G:\HPCHEM\1\DATA\1019ODS\GG018300.D\dad1A.ch
Acq On : 19-Oct-2006, 13:44:13 Operator: MIKEE
Sample : ICV825-500 Inst : G1315B
Misc : OP18222,ggg826,1000,,,10,,water Multiplr: 1.00
IntFile Signal #1: EVENTS.E IntFile Signal #2: EVENTS2.E

Method : C:\HPCHEM\1\METHODS\8330_EX.M (Chemstation Integrator)
Title : Explosives by 8330
Last Update : Thu Oct 19 11:32:41 2006
Response via : Multiple Level Calibration

Min. RRF : 0.000 Min. Rel. Area : 50% Max. R.T. Dev 0.50min
Max. RRF Dev : 15% Max. Rel. Area : 200%

		Compound	Amount	Calc.	%Drift	Area%	Dev(min)	RT Window
1		HMX		----------NA----------				
2		TNX	500.000	514.364	-2.9	0	0.00	4.15- 5.15
3		DNX	500.000	511.166	-2.2	0	0.00	4.58- 5.58
4		MNX	500.000	518.059	-3.6	0	-0.01	5.34- 6.34
5		RDX		----------NA----------				
6		1,3,5-Trinitrobenzene		----------NA----------				
7		1,3-Dinitrobenzene		----------NA----------				
8		Tetryl		----------NA----------				
9		Nitrobenzene		----------NA----------				
10	S	3,4-Dinitrotoluene		----------NA----------				
11		2,4,6-Trinitrotoluene		----------NA----------				
12		4-Amino-2,6-Dinitrotoluen		----------NA----------				
13		2-Amino-4,6-Dinitrotoluen		----------NA----------				
14		2,6-Dinitrotoluene		----------NA----------				
15		2,4-Dinitrotoluene		----------NA----------				
16		o-Nitrotoluene		----------NA----------				
17		p-Nitrotoluene		----------NA----------				
18		m-Nitrotoluene		----------NA----------				

***** Signal #2 *****

1		HMX		----------NA----------				
2		TNX	500.000	509.991	-2.0	0	0.00	4.15- 5.15
3		DNX	500.000	523.209	-4.6	0	0.00	4.58- 5.58
4		MNX	500.000	527.451	-5.5	0	-0.01	5.34- 6.34
5		RDX		----------NA----------				
6		1,3,5-Trinitrobenzene		----------NA----------				
7		1,3-Dinitrobenzene		----------NA----------				
8		Tetryl		----------NA----------				
9		Nitrobenzene		----------NA----------				
10	S	3,4-Dinitrotoluene		----------NA----------				
11		2,4,6-Trinitrotoluene		----------NA----------				
12		4-Amino-2,6-Dinitrotoluen		----------NA----------				
13		2-Amino-4,6-Dinitrotoluen		----------NA----------				
14		2,6-Dinitrotoluene		----------NA----------				
15		2,4-Dinitrotoluene		----------NA----------				
16		o-Nitrotoluene		----------NA----------				
17		p-Nitrotoluene		----------NA----------				
18		m-Nitrotoluene		----------NA----------				

Initial Calibration Verification

Job Number: T16448
Account: ALGC Accutest Laboratories Gulf Coast, Inc.
Project: ITTXHO: Longhorn Army Ammunition Plant

Sample: GGG826-ICV825
Lab FileID: GG018300.D

(#) = Out of Range SPCC's out = 0 CCC's out = 0
GG018286.D 8330_EX.M Fri Oct 20 16:54:56 2006

Initial Calibration Summary

Job Number: T16448
Account: ALGC Accutest Laboratories Gulf Coast, Inc.
Project: ITTXHO: Longhorn Army Ammunition Plant

Sample: GGG827-ICC827
Lab FileID: GG018316.D

Response Factor Report G1315B

Method : C:\HPCHEM\1\METHODS\8330_RP.M (Chemstation Integrator)
Title : Explosives by 8330
Last Update : Fri Oct 20 14:03:32 2006
Response via : Initial Calibration

Calibration Files
20 =GG018313.D 100 =GG018314.D 250 =GG018315.D 500 =GG018316.D
750 =GG018317.D 1000=GG018318.D 2000=GG018319.D

	Compound	20	100	250	500	750	1000	2000	Avg	%RSD
1)	TNX	6.022	6.861	7.022	6.686	6.915	6.925	7.121	6.793 E3	5.38
2)	HMX	2.976	2.856	2.642	2.478	2.489	2.481	2.586	2.644 E3	7.51
3)	DNX	5.820	5.904	5.816	5.437	5.628	5.545	5.823	5.710 E3	3.05
4)	MNX	4.717	4.981	5.224	5.007	5.063	4.976	5.294	5.037 E3	3.73
5)	1,3,5-Trinitroben	7.302	7.899	8.123	7.797	7.946	7.847	8.236	7.879 E3	3.78
6)	RDX	3.327	3.935	3.881	3.729	3.710	3.686	3.841	3.730 E3	5.39
7)	1,3-Dinitrobenzen	1.122	1.117	1.144	1.096	1.117	1.113	1.146	1.122 E4	1.56
8)	Nitrobenzene	6.720	7.206	7.440	7.104	7.286	7.290	7.513	7.223 E3	3.61
9)	2,4,6-Trinitrotol	7.126	7.674	7.812	7.517	7.651	7.587	7.941	7.615 E3	3.39
10)	Tetryl	5.119	5.755	6.124	6.105	6.006	5.862	6.470	5.920 E3	7.10
11)S	3,4-Dinitrotoluen	4.973	4.941	4.969	4.829	4.912	4.883	5.055	4.938 E3	1.46
12)	2,6-Dinitrotoluen	6.023	5.649	5.657	5.415	5.544	5.538	5.672	5.643 E3	3.38
13)	2,4-Dinitrotoluen	1.200	1.036	1.034	0.995	1.012	1.007	1.038	1.046 E4	6.68
14)	o-Nitrotoluene	5.021	4.648	4.729	4.526	4.679	4.666	4.837	4.729 E3	3.36
15)	p-Nitrotoluene	4.036	3.890	3.967	3.762	3.919	3.914	4.051	3.934 E3	2.49
16)	4-Amino-2,6-Dinit	5.109	5.368	5.518	5.300	5.406	5.380	5.621	5.386 E3	3.01
17)	m-Nitrotoluene	4.743	4.946	5.173	4.937	5.131	5.119	5.324	5.053 E3	3.79
18)	2-Amino-4,6-Dinit	7.249	7.503	7.692	7.547	7.548	7.525	7.845	7.558 E3	2.42

Signal #2

1)	TNX	0.828	1.032	1.066	1.024	1.037	1.032	1.073	1.013 E4	8.25
2)	HMX	8.967	9.716	9.270	8.345	8.192	8.095	8.326	8.702 E3	7.15
3)	DNX	0.786	1.108	1.019	0.937	0.919	0.897	0.935	0.943 E4	10.65
4)	MNX	7.457	8.346	8.580	8.147	8.087	7.895	8.399	8.130 E3	4.58
5)	1,3,5-Trinitroben	1.449	1.617	1.667	1.594	1.616	1.593	1.673	1.601 E4	4.64
6)	RDX	6.077	6.386	6.563	6.283	6.229	6.181	6.460	6.311 E3	2.67
7)	1,3-Dinitrobenzen	1.294	1.326	1.427	1.333	1.365	1.364	1.397	1.358 E4	3.31
8)	Nitrobenzene	3.190	3.096	3.823	3.281	3.391	3.385	3.476	3.378 E3	6.96
9)	2,4,6-Trinitrotol	1.098	1.109	1.152	1.104	1.122	1.113	1.169	1.124 E4	2.37
10)	Tetryl	0.953	1.028	1.114	1.113	1.085	1.059	1.177	1.075 E4	6.67
11)S	3,4-Dinitrotoluen	6.832	6.775	6.813	6.648	6.692	6.629	6.906	6.756 E3	1.53
12)	2,6-Dinitrotoluen	8.344	7.760	7.758	7.423	7.578	7.556	7.765	7.740 E3	3.83
13)	2,4-Dinitrotoluen	1.104	0.941	0.942	0.911	0.927	0.919	0.952	0.957 E4	6.94
14)	o-Nitrotoluene	3.189	2.755	2.867	2.791	2.895	2.880	3.025	2.915 E3	5.09
15)	p-Nitrotoluene	2.114	1.879	1.907	1.825	1.916	1.926	1.998	1.938 E3	4.82
16)	4-Amino-2,6-Dinit	1.431	1.486	1.522	1.459	1.490	1.484	1.552	1.489 E4	2.66
17)	m-Nitrotoluene	2.353	2.391	2.516	2.444	2.546	2.567	2.681	2.500 E3	4.52
18)	2-Amino-4,6-Dinit	1.233	1.258	1.276	1.258	1.253	1.255	1.311	1.263 E4	1.92

(#) = Out of Range

8330_RP.M Mon Oct 23 13:34:29 2006

Initial Calibration Verification

Job Number: T16448
Account: ALGC Accutest Laboratories Gulf Coast, Inc.
Project: ITTXHO: Longhorn Army Ammunition Plant

Sample: GGG827-ICV827
Lab FileID: GG018320.D

Evaluate Continuing Calibration Report

Signal #1 : G:\HPCHEM\1\DATA\1020RP\GG018320.D\dad1B.ch Vial: 10
Signal #2 : G:\HPCHEM\1\DATA\1020RP\GG018320.D\dad1A.ch
Acq On : 20-Oct-2006, 14:03:23 Operator: MIKEE
Sample : ICV827-250 Inst : G1315B
Misc : OP18202,ggg827,1000,,,10,,water Multiplr: 1.00
IntFile Signal #1: EVENTS.E IntFile Signal #2: events2.e

Method : C:\HPCHEM\1\METHODS\8330_RP.M (Chemstation Integrator)
Title : Explosives by 8330
Last Update : Fri Oct 20 14:03:32 2006
Response via : Multiple Level Calibration

Min. RRF : 0.000 Min. Rel. Area : 50% Max. R.T. Dev 0.50min
Max. RRF Dev : 15% Max. Rel. Area : 200%

	Compound	Amount	Calc.	%Drift	Area%	Dev(min)	RT Window
1	TNX	250.000	258.384	-3.4	100	0.00	4.21- 5.21
2	HMX	250.000	260.989	-4.4	104	0.00	4.69- 5.69
3	DNX	250.000	254.013	-1.6	100	0.00	4.83- 5.83
4	MNX	250.000	255.142	-2.1	98	0.00	5.66- 6.66
5	1,3,5-Trinitrobenzene	250.000	264.789	-5.9	103	0.00	6.12- 7.12
6	RDX	250.000	252.023	-0.8	97	0.00	6.51- 7.51
7	1,3-Dinitrobenzene	250.000	257.308	-2.9	101	0.00	7.70- 8.70
8	Nitrobenzene	250.000	266.121	-6.4	103	0.00	8.24- 9.24
9	2,4,6-Trinitrotoluene	250.000	268.228	-7.3	105	0.00	8.71- 9.71
10	Tetryl	250.000	205.504	17.8#	79	0.00	9.41-10.41
11 S	3,4-Dinitrotoluene		----------NA----------				
12	2,6-Dinitrotoluene	250.000	254.196	-1.7	101	0.00	10.49-11.49
13	2,4-Dinitrotoluene	250.000	244.946	2.0	99	0.00	10.95-11.95
14	o-Nitrotoluene	250.000	248.278	0.7	99	0.00	11.79-12.79
15	p-Nitrotoluene	250.000	258.872	-3.5	103	0.00	12.45-13.45
16	4-Amino-2,6-Dinitrotol	250.000	255.921	-2.4	100	0.00	12.83-13.83
17	m-Nitrotoluene	250.000	252.478	-1.0	99	0.00	13.29-14.29
18	2-Amino-4,6-Dinitrotol	250.000	236.039	5.6	93	0.00	14.31-15.31

***** Signal #2 *****

1	TNX	250.000	262.147	-4.9	100	0.00	4.22- 5.22
2	HMX	250.000	276.033	-10.4	104	0.00	4.69- 5.69
3	DNX	250.000	263.149	-5.3	97	0.00	4.83- 5.83
4	MNX	250.000	255.967	-2.4	97	0.00	5.66- 6.66
5	1,3,5-Trinitrobenzene	250.000	265.613	-6.2	102	0.00	6.12- 7.12
6	RDX	250.000	248.723	0.5	96	0.00	6.51- 7.51
7	1,3-Dinitrobenzene	250.000	276.649	-10.7	105	0.00	7.70- 8.70
8	Nitrobenzene	250.000	301.148	-20.5#	106	0.00	8.24- 9.24
9	2,4,6-Trinitrotoluene	250.000	269.121	-7.6	105	0.00	8.71- 9.71
10	Tetryl	250.000	203.173	18.7#	78	0.00	9.41-10.41
11 S	3,4-Dinitrotoluene		----------NA----------				
12	2,6-Dinitrotoluene	250.000	252.008	-0.8	101	0.00	10.49-11.49
13	2,4-Dinitrotoluene	250.000	241.694	3.3	98	0.00	10.95-11.95
14	o-Nitrotoluene	250.000	241.466	3.4	98	0.00	11.79-12.79
15	p-Nitrotoluene	250.000	250.555	-0.2	102	0.00	12.46-13.46
16	4-Amino-2,6-Dinitrotol	250.000	255.253	-2.1	100	0.00	12.83-13.83
17	m-Nitrotoluene	250.000	250.572	-0.2	100	0.00	13.28-14.28
18	2-Amino-4,6-Dinitrotol	250.000	234.881	6.0	93	0.00	14.31-15.31

Initial Calibration Verification

Job Number: T16448
Account: ALGC Accutest Laboratories Gulf Coast, Inc.
Project: ITTXHO: Longhorn Army Ammunition Plant

Sample: GGG827-ICV827
Lab FileID: GG018320.D

(#) = Out of Range SPCC's out = 0 CCC's out = 0
GG018315.D 8330_RP.M Mon Oct 23 13:35:35 2006

Initial Calibration Verification

Job Number: T16448
Account: ALGC Accutest Laboratories Gulf Coast, Inc.
Project: ITTXHO: Longhorn Army Ammunition Plant

Sample: GGG827-ICV827
Lab FileID: GG018321.D

Evaluate Continuing Calibration Report

Signal #1 : G:\HPCHEM\1\DATA\1020RP\GG018321.D\dad1B.ch Vial: 100
Signal #2 : G:\HPCHEM\1\DATA\1020RP\GG018321.D\dad1A.ch
Acq On : 20-Oct-2006, 15:10:45 Operator: MIKEE
Sample : ICV827-500 Inst : G1315B
Misc : OP18202,ggg827,1000,,,10,,water Multiplr: 1.00
IntFile Signal #1: EVENTS.E IntFile Signal #2: events2.e

Method : C:\HPCHEM\1\METHODS\8330_RP.M (Chemstation Integrator)
Title : Explosives by 8330
Last Update : Fri Oct 20 14:03:32 2006
Response via : Multiple Level Calibration

Min. RRF : 0.000 Min. Rel. Area : 50% Max. R.T. Dev 0.50min
Max. RRF Dev : 15% Max. Rel. Area : 200%

	Compound	Amount	Calc.	%Drift	Area%	Dev(min)	RT Window
1	TNX	500.000	565.302	-13.1	115	0.00	4.21- 5.21
2	HMX	500.000	543.872	-8.8	116	0.00	4.69- 5.69
3	DNX	500.000	551.643	-10.3	116	-0.01	4.83- 5.83
4	MNX	500.000	572.618	-14.5	115	0.00	5.66- 6.66
5	1,3,5-Trinitrobenzene	500.000	538.163	-7.6	109	0.00	6.12- 7.12
6	RDX	500.000	498.936	0.2	100	0.00	6.51- 7.51
7	1,3-Dinitrobenzene	500.000	510.060	-2.0	104	0.00	7.70- 8.70
8	Nitrobenzene	500.000	533.993	-6.8	109	0.00	8.24- 9.24
9	2,4,6-Trinitrotoluene	500.000	549.178	-9.8	111	0.00	8.71- 9.71
10	Tetryl	500.000	475.586	4.9	92	0.00	9.41-10.41
11 S	3,4-Dinitrotoluene	----------NA----------					
12	2,6-Dinitrotoluene	500.000	498.834	0.2	104	0.00	10.49-11.49
13	2,4-Dinitrotoluene	500.000	493.011	1.4	104	0.00	10.95-11.95
14	o-Nitrotoluene	500.000	510.083	-2.0	107	0.00	11.79-12.79
15	p-Nitrotoluene	500.000	530.499	-6.1	111	0.00	12.45-13.45
16	4-Amino-2,6-Dinitrotol	500.000	518.182	-3.6	105	-0.01	12.83-13.83
17	m-Nitrotoluene	500.000	521.475	-4.3	107	0.00	13.29-14.29
18	2-Amino-4,6-Dinitrotol	500.000	479.808	4.0	96	-0.01	14.31-15.31

***** Signal #2 *****

1	TNX	500.000	637.256	-27.5#	126	-0.01	4.22- 5.22
2	HMX	500.000	581.600	-16.3#	121	0.00	4.69- 5.69
3	DNX	500.000	552.258	-10.5	111	-0.01	4.83- 5.83
4	MNX	500.000	573.858	-14.8	115	0.00	5.66- 6.66
5	1,3,5-Trinitrobenzene	500.000	539.558	-7.9	108	0.00	6.12- 7.12
6	RDX	500.000	495.496	0.9	100	0.00	6.51- 7.51
7	1,3-Dinitrobenzene	500.000	512.019	-2.4	104	0.00	7.70- 8.70
8	Nitrobenzene	500.000	545.924	-9.2	112	0.00	8.24- 9.24
9	2,4,6-Trinitrotoluene	500.000	549.800	-10.0	112	0.00	8.71- 9.71
10	Tetryl	500.000	472.605	5.5	91	0.00	9.41-10.41
11 S	3,4-Dinitrotoluene	----------NA----------					
12	2,6-Dinitrotoluene	500.000	496.402	0.7	104	0.00	10.49-11.49
13	2,4-Dinitrotoluene	500.000	494.458	1.1	104	0.00	10.95-11.95
14	o-Nitrotoluene	500.000	518.803	-3.8	108	0.00	11.79-12.79
15	p-Nitrotoluene	500.000	534.408	-6.9	114	0.00	12.46-13.46
16	4-Amino-2,6-Dinitrotol	500.000	519.292	-3.9	106	-0.01	12.83-13.83
17	m-Nitrotoluene	500.000	532.272	-6.5	109	0.00	13.28-14.28
18	2-Amino-4,6-Dinitrotol	500.000	479.037	4.2	96	-0.01	14.31-15.31

Initial Calibration Verification

Job Number: T16448
Account: ALGC Accutest Laboratories Gulf Coast, Inc.
Project: ITTXHO: Longhorn Army Ammunition Plant

Sample: GGG827-ICV827
Lab FileID: GG018321.D

(#) = Out of Range SPCC's out = 0 CCC's out = 0
GG018316.D 8330_RP.M Mon Oct 23 13:35:18 2006

Continuing Calibration Summary

Job Number: T16448
Account: ALGC Accutest Laboratories Gulf Coast, Inc.
Project: ITTXHO: Longhorn Army Ammunition Plant

Sample: GGG906-CC825
Lab FileID: GG020201.D

Evaluate Continuing Calibration Report

Signal #1 : G:\DATA\0302ODS\GG020201.D\dad1B.ch Vial: 2
Signal #2 : G:\DATA\0302ODS\GG020201.D\dad1A.ch
Acq On : 02-Mar-2007, 16:17:48 Operator: MIKEE
Sample : CC825-500 Inst : G1315B
Misc : OP19677,ggg906,1000,,,10,,water Multiplr: 1.00
IntFile Signal #1: EVENTS.E IntFile Signal #2: EVENTS2.E

Method : C:\HPCHEM\1\METHODS\8330_EX.M (Chemstation Integrator)
Title : Explosives by 8330
Last Update : Thu Mar 01 11:02:09 2007
Response via : Multiple Level Calibration

Min. RRF : 0.000 Min. Rel. Area : 50% Max. R.T. Dev 0.50min
Max. RRF Dev : 15% Max. Rel. Area : 200%

	Compound	Amount	Calc.	%Drift	Area%	Dev(min)	RT Window
1	HMX	500.000	490.559	1.9	101	0.00	3.86- 4.86
2	TNX	500.000	512.293	-2.5	103	-0.01	4.20- 5.20
3	DNX	500.000	511.151	-2.2	104	0.00	4.60- 5.60
4	MNX	500.000	508.598	-1.7	104	0.01	5.37- 6.37
5	RDX	500.000	518.998	-3.8	104	0.00	6.15- 7.15
6	1,3,5-Trinitrobenzene	500.000	498.455	0.3	103	0.02	8.43- 9.43
7	1,3-Dinitrobenzene	500.000	498.190	0.4	102	0.02	10.43-11.43
8	Tetryl	500.000	498.475	0.3	102	0.03	11.21-12.21
9	Nitrobenzene	500.000	503.313	-0.7	104	0.03	11.93-12.93
10 S	3,4-Dinitrotoluene	500.000	496.619	0.7	102	0.04	12.95-13.95
11	2,4,6-Trinitrotoluene	500.000	503.597	-0.7	103	0.04	13.60-14.60
12	4-Amino-2,6-Dinitrotol	500.000	496.441	0.7	102	0.05	14.37-15.37
13	2-Amino-4,6-Dinitrotol	500.000	500.727	-0.1	103	0.05	15.14-16.14
14	2,6-Dinitrotoluene	500.000	510.258	-2.1	107	0.05	16.10-17.10
15	2,4-Dinitrotoluene	500.000	480.817	3.8	101	0.05	16.60-17.60
16	o-Nitrotoluene	500.000	497.302	0.5	106	0.06	19.73-20.73
17	p-Nitrotoluene	500.000	500.449	-0.1	106	0.06	21.06-22.06
18	m-Nitrotoluene	500.000	506.087	-1.2	106	0.07	22.76-23.76
*****	Signal #2 *****						
1	HMX	500.000	500.092	-0.0	102	0.00	3.86- 4.86
2	TNX	500.000	509.529	-1.9	103	0.00	4.18- 5.18
3	DNX	500.000	520.538	-4.1	104	0.00	4.60- 5.60
4	MNX	500.000	521.239	-4.2	106	0.01	5.37- 6.37
5	RDX	500.000	566.452	-13.3	111	0.00	6.15- 7.15
6	1,3,5-Trinitrobenzene	500.000	505.722	-1.1	103	0.02	8.43- 9.43
7	1,3-Dinitrobenzene	500.000	502.475	-0.5	102	0.02	10.43-11.43
8	Tetryl	500.000	507.037	-1.4	102	0.03	11.21-12.21
9	Nitrobenzene	500.000	499.803	0.0	103	0.03	11.93-12.93
10 S	3,4-Dinitrotoluene	500.000	495.718	0.9	101	0.04	12.95-13.95
11	2,4,6-Trinitrotoluene	500.000	500.992	-0.2	103	0.04	13.60-14.60
12	4-Amino-2,6-Dinitrotol	500.000	497.188	0.6	102	0.05	14.37-15.37
13	2-Amino-4,6-Dinitrotol	500.000	499.032	0.2	103	0.05	15.14-16.14
14	2,6-Dinitrotoluene	500.000	496.978	0.6	105	0.05	16.10-17.10
15	2,4-Dinitrotoluene	500.000	472.110	5.6	100	0.05	16.60-17.60
16	o-Nitrotoluene	500.000	489.795	2.0	104	0.05	19.73-20.73
17	p-Nitrotoluene	500.000	496.698	0.7	105	0.06	21.06-22.06
18	m-Nitrotoluene	500.000	503.963	-0.8	105	0.07	22.77-23.77

Continuing Calibration Summary

Job Number: T16448
Account: ALGC Accutest Laboratories Gulf Coast, Inc.
Project: ITTXHO: Longhorn Army Ammunition Plant

Sample: GGG906-CC825
Lab FileID: GG020201.D

```
(#) = Out of Range                SPCC's out = 0  CCC's out = 0
 GG018282.D 8330_EX.M        Mon Mar 05 11:42:29 2007
```

Continuing Calibration Summary

Job Number: T16448
Account: ALGC Accutest Laboratories Gulf Coast, Inc.
Project: ITTXHO: Longhorn Army Ammunition Plant

Sample: GGG906-CC825
Lab FileID: GG020212.D

Evaluate Continuing Calibration Report

Signal #1 : G:\DATA\0302ODS\GG020212.D\dad1B.ch Vial: 3
Signal #2 : G:\DATA\0302ODS\GG020212.D\dad1A.ch
Acq On : 02-Mar-2007, 21:07:57 Operator: MIKEE
Sample : CC825-1000 Inst : G1315B
Misc : OP19677,ggg906,1000,,,10,,water Multiplr: 1.00
IntFile Signal #1: EVENTS.E IntFile Signal #2: EVENTS2.E

Method : C:\HPCHEM\1\METHODS\8330_EX.M (Chemstation Integrator)
Title : Explosives by 8330
Last Update : Thu Mar 01 11:02:09 2007
Response via : Multiple Level Calibration

Min. RRF : 0.000 Min. Rel. Area : 50% Max. R.T. Dev 0.50min
Max. RRF Dev : 15% Max. Rel. Area : 200%

		Compound	Amount	Calc.	%Drift	Area%	Dev(min)	RT Window
1		HMX	1000.000	969.184	3.1	98	0.00	3.86- 4.86
2		TNX	1000.000	1012.847	-1.3	100	-0.02	4.20- 5.20
3		DNX	1000.000	1011.041	-1.1	101	0.00	4.60- 5.60
4		MNX	1000.000	1001.768	-0.2	101	0.00	5.37- 6.37
5		RDX	1000.000	1012.522	-1.3	100	-0.01	6.15- 7.15
6		1,3,5-Trinitrobenzene	1000.000	982.133	1.8	99	0.00	8.43- 9.43
7		1,3-Dinitrobenzene	1000.000	981.873	1.8	99	0.00	10.43-11.43
8		Tetryl	1000.000	979.286	2.1	98	0.00	11.21-12.21
9		Nitrobenzene	1000.000	995.199	0.5	100	0.00	11.93-12.93
10	S	3,4-Dinitrotoluene	1000.000	971.158	2.9	98	0.00	12.95-13.95
11		2,4,6-Trinitrotoluene	1000.000	991.752	0.8	99	0.00	13.60-14.60
12		4-Amino-2,6-Dinitrotol	1000.000	975.490	2.5	98	0.00	14.37-15.37
13		2-Amino-4,6-Dinitrotol	1000.000	987.191	1.3	99	0.00	15.14-16.14
14		2,6-Dinitrotoluene	1000.000	995.657	0.4	102	0.00	16.10-17.10
15		2,4-Dinitrotoluene	1000.000	946.550	5.3	98	0.00	16.60-17.60
16		o-Nitrotoluene	1000.000	961.637	3.8	99	-0.01	19.73-20.73
17		p-Nitrotoluene	1000.000	975.200	2.5	99	-0.01	21.06-22.06
18		m-Nitrotoluene	1000.000	997.451	0.3	100	0.00	22.76-23.76

***** Signal #2 *****

1		HMX	1000.000	984.283	1.6	99	0.00	3.86- 4.86
2		TNX	1000.000	1002.891	-0.3	100	0.00	4.18- 5.18
3		DNX	1000.000	1012.877	-1.3	101	0.00	4.60- 5.60
4		MNX	1000.000	1004.320	-0.4	101	0.00	5.37- 6.37
5		RDX	1000.000	1044.793	-4.5	101	-0.02	6.15- 7.15
6		1,3,5-Trinitrobenzene	1000.000	984.579	1.5	99	0.00	8.43- 9.43
7		1,3-Dinitrobenzene	1000.000	989.010	1.1	99	0.00	10.43-11.43
8		Tetryl	1000.000	997.573	0.2	99	0.00	11.21-12.21
9		Nitrobenzene	1000.000	992.439	0.8	102	0.00	11.93-12.93
10	S	3,4-Dinitrotoluene	1000.000	962.803	3.7	98	0.00	12.95-13.95
11		2,4,6-Trinitrotoluene	1000.000	983.229	1.7	99	0.00	13.60-14.60
12		4-Amino-2,6-Dinitrotol	1000.000	974.885	2.5	98	0.00	14.37-15.37
13		2-Amino-4,6-Dinitrotol	1000.000	978.179	2.2	99	0.00	15.14-16.14
14		2,6-Dinitrotoluene	1000.000	974.861	2.5	101	0.00	16.10-17.10
15		2,4-Dinitrotoluene	1000.000	935.023	6.5	97	0.00	16.60-17.60
16		o-Nitrotoluene	1000.000	961.820	3.8	98	-0.01	19.73-20.73
17		p-Nitrotoluene	1000.000	982.213	1.8	99	0.00	21.06-22.06
18		m-Nitrotoluene	1000.000	1002.440	-0.2	99	-0.01	22.77-23.77

Continuing Calibration Summary

Job Number: T16448
Account: ALGC Accutest Laboratories Gulf Coast, Inc.
Project: ITTXHO: Longhorn Army Ammunition Plant

Sample: GGG906-CC825
Lab FileID: GG020212.D

```
(#) = Out of Range                SPCC's out = 0  CCC's out = 0
 GG018284.D 8330_EX.M        Mon Mar 05 11:42:13 2007
```

Continuing Calibration Summary

Job Number: T16448
Account: ALGC Accutest Laboratories Gulf Coast, Inc.
Project: ITTXHO: Longhorn Army Ammunition Plant

Sample: GGG906-CC825
Lab FileID: GG020224.D

Evaluate Continuing Calibration Report

Signal #1 : G:\DATA\0302ODS\GG020224.D\dad1B.ch Vial: 3
Signal #2 : G:\DATA\0302ODS\GG020224.D\dad1A.ch
Acq On : 03-Mar-2007, 02:38:33 Operator: MIKEE
Sample : CC825-1000 Inst : G1315B
Misc : OP19677,ggg906,1000,,,10,,water Multiplr: 1.00
IntFile Signal #1: EVENTS.E IntFile Signal #2: EVENTS2.E

Method : C:\HPCHEM\1\METHODS\8330_EX.M (Chemstation Integrator)
Title : Explosives by 8330
Last Update : Thu Mar 01 11:02:09 2007
Response via : Multiple Level Calibration

Min. RRF : 0.000 Min. Rel. Area : 50% Max. R.T. Dev 0.50min
Max. RRF Dev : 15% Max. Rel. Area : 200%

		Compound	Amount	Calc.	%Drift	Area%	Dev(min)	RT Window
1		HMX	1000.000	963.991	3.6	97	0.00	3.86- 4.86
2		TNX	1000.000	1010.267	-1.0	100	-0.02	4.20- 5.20
3		DNX	1000.000	1005.452	-0.5	101	0.00	4.60- 5.60
4		MNX	1000.000	1000.098	-0.0	100	0.00	5.37- 6.37
5		RDX	1000.000	1025.240	-2.5	102	-0.02	6.15- 7.15
6		1,3,5-Trinitrobenzene	1000.000	993.055	0.7	100	0.00	8.43- 9.43
7		1,3-Dinitrobenzene	1000.000	980.619	1.9	99	-0.01	10.43-11.43
8		Tetryl	1000.000	974.910	2.5	98	-0.02	11.21-12.21
9		Nitrobenzene	1000.000	982.824	1.7	99	-0.01	11.93-12.93
10	S	3,4-Dinitrotoluene	1000.000	957.890	4.2	96	-0.01	12.95-13.95
11		2,4,6-Trinitrotoluene	1000.000	980.868	1.9	98	-0.01	13.60-14.60
12		4-Amino-2,6-Dinitrotol	1000.000	962.421	3.8	97	0.00	14.37-15.37
13		2-Amino-4,6-Dinitrotol	1000.000	1009.138	-0.9	101	0.00	15.14-16.14
14		2,6-Dinitrotoluene	1000.000	1335.440	-33.5#	137	0.00	16.10-17.10
15		2,4-Dinitrotoluene	1000.000	1096.840	-9.7	113	-0.01	16.60-17.60
16		o-Nitrotoluene	1000.000	979.988	2.0	101	-0.02	19.73-20.73
17		p-Nitrotoluene	1000.000	1001.774	-0.2	102	-0.02	21.06-22.06
18		m-Nitrotoluene	1000.000	1009.574	-1.0	101	-0.02	22.76-23.76

***** Signal #2 *****

1		HMX	1000.000	940.821	5.9	95	0.00	3.86- 4.86
2		TNX	1000.000	949.976	5.0	95	0.00	4.18- 5.18
3		DNX	1000.000	962.122	3.8	96	0.00	4.60- 5.60
4		MNX	1000.000	1000.037	-0.0	101	0.00	5.37- 6.37
5		RDX	1000.000	1048.505	-4.9	101	-0.02	6.15- 7.15
6		1,3,5-Trinitrobenzene	1000.000	992.257	0.8	100	0.00	8.43- 9.43
7		1,3-Dinitrobenzene	1000.000	989.715	1.0	99	-0.01	10.43-11.43
8		Tetryl	1000.000	995.610	0.4	99	-0.02	11.21-12.21
9		Nitrobenzene	1000.000	966.310	3.4	99	-0.01	11.93-12.93
10	S	3,4-Dinitrotoluene	1000.000	952.955	4.7	97	-0.01	12.95-13.95
11		2,4,6-Trinitrotoluene	1000.000	974.813	2.5	98	-0.01	13.60-14.60
12		4-Amino-2,6-Dinitrotol	1000.000	968.590	3.1	98	0.00	14.37-15.37
13		2-Amino-4,6-Dinitrotol	1000.000	981.214	1.9	99	0.00	15.14-16.14
14		2,6-Dinitrotoluene	1000.000	1062.649	-6.3	110	0.00	16.10-17.10
15		2,4-Dinitrotoluene	1000.000	991.035	0.9	103	-0.01	16.60-17.60
16		o-Nitrotoluene	1000.000	973.475	2.7	99	-0.02	19.73-20.73
17		p-Nitrotoluene	1000.000	993.006	0.7	100	-0.02	21.06-22.06
18		m-Nitrotoluene	1000.000	1007.492	-0.7	100	-0.03	22.77-23.77

Continuing Calibration Summary

Job Number: T16448
Account: ALGC Accutest Laboratories Gulf Coast, Inc.
Project: ITTXHO: Longhorn Army Ammunition Plant

Sample: GGG906-CC825
Lab FileID: GG020224.D

```
(#) = Out of Range                SPCC's out = 0  CCC's out = 0
 GG018284.D 8330_EX.M        Mon Mar 05 11:42:13 2007
```

Continuing Calibration Summary

Job Number: T16448
Account: ALGC Accutest Laboratories Gulf Coast, Inc.
Project: ITTXHO: Longhorn Army Ammunition Plant

Sample: GGG907-CC827
Lab FileID: GG020231.D

Evaluate Continuing Calibration Report

Signal #1 : G:\DATA\0305RP\GG020231.D\dad1B.ch Vial: 2
Signal #2 : G:\DATA\0305RP\GG020231.D\dad1A.ch
Acq On : 05-Mar-2007, 13:23:34 Operator: MIKEE
Sample : CC827-500 Inst : G1315B
Misc : OP19677,ggg907,1000,,,10,,water Multiplr: 1.00
IntFile Signal #1: EVENTS.E IntFile Signal #2: events2.e

Method : C:\HPCHEM\1\METHODS\8330_RP.M (Chemstation Integrator)
Title : Explosives by 8330
Last Update : Fri Jan 26 08:35:20 2007
Response via : Multiple Level Calibration

Min. RRF : 0.000 Min. Rel. Area : 50% Max. R.T. Dev 0.50min
Max. RRF Dev : 15% Max. Rel. Area : 200%

	Compound	Amount	Calc.	%Drift	Area%	Dev(min)	RT Window
1	TNX	500.000	551.245	-10.2	112	0.02	4.24- 5.24
2	HMX	500.000	527.482	-5.5	113	0.00	4.75- 5.75
3	DNX	500.000	526.884	-5.4	111	0.01	4.87- 5.87
4	MNX	500.000	525.950	-5.2	106	0.00	5.72- 6.72
5	1,3,5-Trinitrobenzene	500.000	507.541	-1.5	103	0.00	6.17- 7.17
6	RDX	500.000	498.345	0.3	100	0.02	6.56- 7.56
7	1,3-Dinitrobenzene	500.000	495.147	1.0	101	0.00	7.78- 8.78
8	Nitrobenzene	500.000	509.807	-2.0	104	0.00	8.29- 9.29
9	2,4,6-Trinitrotoluene	500.000	506.824	-1.4	103	-0.01	8.80- 9.80
10	Tetryl	500.000	535.862	-7.2	104	0.00	9.52-10.52
11 S	3,4-Dinitrotoluene	500.000	492.695	1.5	101	0.00	10.21-11.21
12	2,6-Dinitrotoluene	500.000	489.618	2.1	102	-0.02	10.59-11.59
13	2,4-Dinitrotoluene	500.000	483.678	3.3	102	-0.02	11.06-12.06
14	o-Nitrotoluene	500.000	502.970	-0.6	105	-0.01	11.86-12.86
15	p-Nitrotoluene	500.000	503.359	-0.7	105	-0.01	12.53-13.53
16	4-Amino-2,6-Dinitrotol	500.000	502.155	-0.4	102	-0.03	12.95-13.95
17	m-Nitrotoluene	500.000	523.547	-4.7	107	-0.02	13.38-14.38
18	2-Amino-4,6-Dinitrotol	500.000	503.929	-0.8	101	-0.03	14.45-15.45

***** Signal #2 *****

1	TNX	500.000	539.038	-7.8	107	0.02	4.24- 5.24
2	HMX	500.000	501.388	-0.3	105	0.00	4.75- 5.75
3	DNX	500.000	520.169	-4.0	105	0.01	4.87- 5.87
4	MNX	500.000	520.287	-4.1	104	0.00	5.72- 6.72
5	1,3,5-Trinitrobenzene	500.000	508.259	-1.7	102	0.00	6.17- 7.17
6	RDX	500.000	496.557	0.7	100	0.02	6.56- 7.56
7	1,3-Dinitrobenzene	500.000	499.335	0.1	102	0.00	7.78- 8.78
8	Nitrobenzene	500.000	521.041	-4.2	107	0.00	8.29- 9.29
9	2,4,6-Trinitrotoluene	500.000	510.092	-2.0	104	-0.01	8.80- 9.80
10	Tetryl	500.000	533.664	-6.7	103	0.00	9.52-10.52
11 S	3,4-Dinitrotoluene	500.000	488.383	2.3	99	0.00	10.21-11.21
12	2,6-Dinitrotoluene	500.000	487.517	2.5	102	-0.02	10.59-11.59
13	2,4-Dinitrotoluene	500.000	483.800	3.2	102	-0.02	11.06-12.06
14	o-Nitrotoluene	500.000	519.246	-3.8	108	-0.01	11.86-12.86
15	p-Nitrotoluene	500.000	515.868	-3.2	110	0.00	12.54-13.54
16	4-Amino-2,6-Dinitrotol	500.000	499.988	0.0	102	-0.03	12.95-13.95
17	m-Nitrotoluene	500.000	538.963	-7.8	110	-0.02	13.37-14.37
18	2-Amino-4,6-Dinitrotol	500.000	499.905	0.0	100	-0.03	14.45-15.45

Continuing Calibration Summary

Job Number: T16448
Account: ALGC Accutest Laboratories Gulf Coast, Inc.
Project: ITTXHO: Longhorn Army Ammunition Plant

Sample: GGG907-CC827
Lab FileID: GG020231.D

```
(#) = Out of Range                SPCC's out = 0  CCC's out = 0
 GG018316.D 8330_RP.M         Tue Mar 06 10:57:51 2007
```

Continuing Calibration Summary

Job Number: T16448
Account: ALGC Accutest Laboratories Gulf Coast, Inc.
Project: ITTXHO: Longhorn Army Ammunition Plant

Sample: GGG907-ECC827
Lab FileID: GG020238.D

Evaluate Continuing Calibration Report

Signal #1 : G:\DATA\0305RP\GG020238.D\dad1B.ch Vial: 3
Signal #2 : G:\DATA\0305RP\GG020238.D\dad1A.ch
Acq On : 05-Mar-2007, 15:40:35 Operator: MIKEE
Sample : ECC827-1000 Inst : G1315B
Misc : OP19677,ggg907,1000,,,10,,water Multiplr: 1.00
IntFile Signal #1: EVENTS.E IntFile Signal #2: events2.e

Method : C:\HPCHEM\1\METHODS\8330_RP.M (Chemstation Integrator)
Title : Explosives by 8330
Last Update : Fri Jan 26 08:35:20 2007
Response via : Multiple Level Calibration

Min. RRF : 0.000 Min. Rel. Area : 50% Max. R.T. Dev 0.50min
Max. RRF Dev : 15% Max. Rel. Area : 200%

	Compound	Amount	Calc.	%Drift	Area%	Dev(min)	RT Window
1	TNX	1000.000	1064.078	-6.4	104	0.02	4.24- 5.24
2	HMX	1000.000	1064.872	-6.5	113	0.00	4.75- 5.75
3	DNX	1000.000	1029.858	-3.0	106	0.00	4.87- 5.87
4	MNX	1000.000	1052.110	-5.2	107	0.00	5.72- 6.72
5	1,3,5-Trinitrobenzene	1000.000	1020.840	-2.1	102	0.00	6.17- 7.17
6	RDX	1000.000	1020.894	-2.1	103	0.02	6.56- 7.56
7	1,3-Dinitrobenzene	1000.000	1005.302	-0.5	101	0.00	7.78- 8.78
8	Nitrobenzene	1000.000	1031.078	-3.1	102	0.00	8.29- 9.29
9	2,4,6-Trinitrotoluene	1000.000	1033.117	-3.3	104	-0.01	8.80- 9.80
10	Tetryl	1000.000	1104.790	-10.5	112	0.00	9.52-10.52
11 S	3,4-Dinitrotoluene	1000.000	1016.218	-1.6	103	0.00	10.21-11.21
12	2,6-Dinitrotoluene	1000.000	998.411	0.2	102	-0.02	10.59-11.59
13	2,4-Dinitrotoluene	1000.000	987.663	1.2	103	-0.02	11.06-12.06
14	o-Nitrotoluene	1000.000	1040.619	-4.1	105	-0.01	11.86-12.86
15	p-Nitrotoluene	1000.000	1034.751	-3.5	104	-0.01	12.53-13.53
16	4-Amino-2,6-Dinitrotol	1000.000	1018.262	-1.8	102	-0.02	12.95-13.95
17	m-Nitrotoluene	1000.000	1063.626	-6.4	105	-0.02	13.38-14.38
18	2-Amino-4,6-Dinitrotol	1000.000	1018.025	-1.8	102	-0.02	14.45-15.45

***** Signal #2 *****

1	TNX	1000.000	1065.753	-6.6	105	0.02	4.24- 5.24
2	HMX	1000.000	959.987	4.0	103	0.00	4.75- 5.75
3	DNX	1000.000	1023.085	-2.3	108	0.01	4.87- 5.87
4	MNX	1000.000	1036.881	-3.7	107	0.00	5.72- 6.72
5	1,3,5-Trinitrobenzene	1000.000	1018.352	-1.8	102	0.00	6.17- 7.17
6	RDX	1000.000	995.036	0.5	102	0.02	6.56- 7.56
7	1,3-Dinitrobenzene	1000.000	1003.575	-0.4	100	0.00	7.78- 8.78
8	Nitrobenzene	1000.000	1035.575	-3.6	103	0.00	8.29- 9.29
9	2,4,6-Trinitrotoluene	1000.000	1043.825	-4.4	105	-0.01	8.80- 9.80
10	Tetryl	1000.000	1097.433	-9.7	111	0.00	9.52-10.52
11 S	3,4-Dinitrotoluene	1000.000	1002.293	-0.2	102	0.00	10.21-11.21
12	2,6-Dinitrotoluene	1000.000	991.509	0.8	102	-0.02	10.59-11.59
13	2,4-Dinitrotoluene	1000.000	990.702	0.9	103	-0.02	11.06-12.06
14	o-Nitrotoluene	1000.000	1071.751	-7.2	108	-0.01	11.86-12.86
15	p-Nitrotoluene	1000.000	1073.626	-7.4	108	0.00	12.54-13.54
16	4-Amino-2,6-Dinitrotol	1000.000	1006.760	-0.7	101	-0.02	12.95-13.95
17	m-Nitrotoluene	1000.000	1093.803	-9.4	107	-0.02	13.37-14.37
18	2-Amino-4,6-Dinitrotol	1000.000	1006.963	-0.7	101	-0.02	14.45-15.45

Continuing Calibration Summary

Job Number: T16448
Account: ALGC Accutest Laboratories Gulf Coast, Inc.
Project: ITTXHO: Longhorn Army Ammunition Plant

Sample: GGG907-ECC827
Lab FileID: GG020238.D

(#) = Out of Range SPCC's out = 0 CCC's out = 0
GG018318.D 8330_RP.M Tue Mar 06 10:58:20 2007

General Chemistry

QC Data Summaries

(Accutest Laboratories Southeast, Inc.)

Includes the following where applicable:

- Method Blank and Blank Spike Summaries
- Duplicate Summaries
- Matrix Spike Summaries
- Instrument Runlogs/QC

METHOD BLANK AND SPIKE RESULTS SUMMARY
GENERAL CHEMISTRY

Login Number: T16448
Account: ALGC - Accutest Laboratories Gulf Coast, Inc.
Project: ITTXHO: Longhorn Army Ammunition Plant

Analyte	Batch ID	RL	MB Result	Units	Spike Amount	BSP Result	BSP %Recov	QC Limits
Perchlorate	GP9044/GN24408	10	<10	ug/l	50	50.1	100.2	85-115%

Associated Samples:
Batch GP9044: T16448-1
(*) Outside of QC limits

DUPLICATE RESULTS SUMMARY
GENERAL CHEMISTRY

Login Number: T16448
Account: ALGC - Accutest Laboratories Gulf Coast, Inc.
Project: ITTXHO: Longhorn Army Ammunition Plant

Analyte	Batch ID	QC Sample	Units	Original Result	DUP Result	RPD	QC Limits
Perchlorate	GP9044/GN24408	T16445-5	ug/l	27.8	29.4	5.6	0-15%

Associated Samples:
Batch GP9044: T16448-1
(*) Outside of QC limits

MATRIX SPIKE RESULTS SUMMARY
GENERAL CHEMISTRY

Login Number: T16448
Account: ALGC - Accutest Laboratories Gulf Coast, Inc.
Project: ITTXHO: Longhorn Army Ammunition Plant

Analyte	Batch ID	QC Sample	Units	Original Result	Spike Amount	MS Result	%Rec	QC Limits
Perchlorate	GP9044/GN24408	T16445-5	ug/l	27.8	50	79.8	104.0	80-120%

Associated Samples:
Batch GP9044: T16448-1
(*) Outside of QC limits
(N) Matrix Spike Rec. outside of QC limits

Accutest Laboratories Instrument Runlog
Inorganics Analyses

Login Number: T16448
Account: ALGC - Accutest Laboratories Gulf Coast, Inc.
Project: ITTXHO: Longhorn Army Ammunition Plant

File ID: 207030201.TXT Date Analyzed: 03/02/07 Methods: EPA 314
Analyst: MP Run ID: GN24408
Parameters: Perchlorate

Time	Sample Description	Dilution Factor	PS Recov	Comments
14:05	GN24408-CCV1	1		
14:20	GN24408-CCB1	1		
14:34	GP9044-MB1	1		
14:49	GP9044-B1	1		
15:31	GN24408-CRI1	1		
15:46	GN24408-IPC1	1		
16:00	ZZZZZZ	1		
16:15	ZZZZZZ	1		
16:29	ZZZZZZ	1		
16:43	ZZZZZZ	1		
16:58	T16445-5	1		(sample used for QC only; not part of login T16448)
17:12	T16445-6	1		(sample used for QC only; not part of login T16448)
17:27	GN24408-CCV2	1		
17:41	GN24408-CCB2	1		
17:55	ZZZZZZ	1		
18:10	ZZZZZZ	1		
18:24	ZZZZZZ	1		
18:39	ZZZZZZ	1		
18:53	ZZZZZZ	1		
19:22	ZZZZZZ	1		
19:36	ZZZZZZ	1		
19:51	ZZZZZZ	1		
20:05	T16448-1	1		
20:19	GN24408-CCV3	1		
20:34	GN24408-CCB3	1		
20:48	GP9044-D1	1		
21:03	GP9044-S1	1		
21:17	GP9044-D2	1		
21:32	GP9044-S2	1		
21:46	GN24408-CCV4	1		
22:00	GN24408-CCB4	1		

Refer to raw data for calibration curve and standards.

Instrument QC Summary
Inorganics Analyses

Login Number: T16448
Account: ALGC - Accutest Laboratories Gulf Coast, Inc.
Project: ITTXHO: Longhorn Army Ammunition Plant

File ID: 207030201.TXT Date Analyzed: 03/02/07 Methods: EPA 314
Run ID: GN24408 Units: ug/l

Sample Number	Parameter	Result	RL	IDL/MDL	True Value	% Recov.	QC Limits
GN24408-CCV1	Perchlorate	52.1	10	4.0	50	104.2	85-115
GN24408-CCB1	Perchlorate	4.0 U	10	4.0			
GN24408-CRI1	Perchlorate	4.0 U	10	4.0	3	86.6	75-125
GN24408-IPC1	Perchlorate	23.2	10	4.0	25	92.8	80-120
GN24408-CCV2	Perchlorate	50.4	10	4.0	50	100.8	85-115
GN24408-CCB2	Perchlorate	4.0 U	10	4.0			
GN24408-CCV3	Perchlorate	52.6	10	4.0	50	105.2	85-115
GN24408-CCB3	Perchlorate	4.0 U	10	4.0			
GN24408-CCV4	Perchlorate	53.4	10	4.0	50	106.8	85-115
GN24408-CCB4	Perchlorate	4.0 U	10	4.0			

(!) Outside of QC limits

Appendix D

Summary Table, Field Sheets, Well Log (29WW41) and Analytical Data Reports (October 2008, January 2009, and June 2009)

Analytical Data Reports
Available on the attached CD

Table D-1

	Location Code	114					116					116					118					29WW01					29WW01					29WW02					29WW04					29WW07				
	Sample Date	20-Oct-08					21-Oct-08					21-Oct-08					20-Oct-08					23-Oct-08					21-Jan-09					23-Oct-08					25-Oct-08					25-Oct-08				
	Sample No.	MW114-102008					MW116-102108					MW116-102108-FD					MW118-102008					29WW01-102308					29WW01-012109					29WW02-102308					29WW04-102508					29WW07-102508				
	Sample Purpose	REG					REG					FD					REG					REG					REG					REG					REG					REG				
Test Group	Parameter	Units	Result	Qual	ValQual	RC	DF	Result	Qual	ValQual	RC	DF	Result	Qual	ValQual	RC	DF	Result	Qual	ValQual	RC	DF	Result	Qual	ValQual	RC	DF	Result	Qual	ValQual	RC	DF	Result	Qual	ValQual	RC	DF	Result	Qual	ValQual	RC	DF	Result	Qual	ValQual	RC	DF
FIELD TESTS	Dissolved Oxygen	mg/L	0.7				1	1.67				1						2.45				1	4.12				1						5.91				1	2.77				1	4.7				1
FIELD TESTS	Oxygen Reduction Potential	mV	97.5				1	55.9				1						71.1				1	100.7				1						63.7				1	26.9				1	1.2				1
FIELD TESTS	pH	pH UNITS	6.51				1	6.42				1						6.66				1	6.7				1						6.45				1	9.06				1	6.39				1
FIELD TESTS	Specific Conductivity	uS/cm	2.619				1	5.777				1						4.177				1	2.743				1						4.484				1	0.89				1	3.374				1
FIELD TESTS	Temperature	Deg C	19.84				1	18.12				1						20.56				1	17.95				1						19.43				1	19.63				1	16.89				1
FIELD TESTS	Turbidity	NTU	5.1				1	6.8				1						0				1	7.8				1						6.5				1	0				1	0.6				1
METALS	Aluminum	mg/L	0.0846	J	J	15	1	0.439				1	0.445				1	0.05	U	U		1	0.107				1						0.05	U	U		1	0.137				1	0.05	U	U		1
METALS	Antimony	mg/L	0.000325	J	J,B	15, 06B	1	0.00156		J	17	1	0.00025	U	UJ	17	1	0.00025	U	U		1	0.00025	U	U		1						0.00025	U	U		1	0.00025	U	U		1	0.00025	U	U		1
METALS	Arsenic	mg/L	0.00409				1	0.0431		J	17	1	0.00621		J	17	1	0.00554				1	0.00304				1						0.00333				1	0.000739	J	J	15	1	0.00298				1
METALS	Barium	mg/L	0.0511				1	0.0485		J	17	1	0.0237		J	17	1	0.0343				1	0.0702				1						0.0235				1	0.0416				1	0.0239				1
METALS	Beryllium	mg/L	0.0005	U	U		1	0.0005	U	U		1	0.0005	U	U		1	0.0005	U	U		1	0.0005	U	U		1						0.000627	J	J	15	1	0.0005	U	U		1	0.0005	U	U		1
METALS	Cadmium	mg/L	0.000509				1	0.00112				1	0.000828				1	0.000167	J	J	15	1	0.000165	J	J	15	1						0.000243	J	J	15	1	0.000125	U	U		1	0.000125	U	U		1
METALS	Calcium	mg/L	161				5	509				5	495				5	347				1	189				1						502				2	4.67				1	373				1
METALS	Chromium	mg/L	0.0149				1	0.0415				1	0.0388				1	0.00596				2	0.599				50	0.023				10	0.0284				1	0.00806				1	0.215				1
METALS	Cobalt	mg/L	0.00614				1	0.00429	J	J	15	1	0.00408	J	J	15	1	0.0025	U	U		1	0.0025	U	U		1						0.0258				1	0.0025	U	U		1	0.0498				1
METALS	Copper	mg/L	0.0149				1	0.0207				1	0.0185				1	0.00308				1	0.0109				1						0.00512				1	0.00235				1	0.00421				1
METALS	Iron	mg/L	1.1				5	1.66				5	1.67				5	0.025	U	U		1	0.822				1						1.28				1	0.156				1	5.5				1
METALS	Lead	mg/L	0.000748				1	0.00685		J	17	1	0.00132		J	17	1	0.00025	U	U		1	0.00025	U	U		1						0.00025	U	U		1	0.00025	U	U		1	0.00025	U	U		1
METALS	Magnesium	mg/L	160				1	355				1	354				1	187				1	129				1						255				1	1.51				1	155				1
METALS	Manganese	mg/L	1.31				50	0.176				1	0.194				1	0.00714				1	0.0158				1						0.833				50	0.00873				1	0.705				50
METALS	Mercury	mg/L	0.0001	U	U		1	0.0001	U	U		1	0.0001	U	U		1	0.0061				1	0.0001	U	U		1						0.0001	U	U		1	0.0001	U	U		1	0.0001	U	U		1
METALS	Nickel	mg/L	0.0423				1	0.0639				1	0.0612				1	0.0266				1	0.203				50						1.53				50	0.0027	J	J	15	1	3.19				50
METALS	Potassium	mg/L	3.26				1	5.85				1	5.74				1	1.99				1	3.05				1						5.53				1	1.76				1	4.41				1
METALS	Selenium	mg/L	0.0132				1	0.023				1	0.0223				1	0.0753				1	0.0119				1						0.0143				1	0.00215				1	0.0118				1
METALS	Silver	mg/L	0.00025	U	U		1	0.00025	U	U		1	0.00025	U	U		1	0.00025	U	U		1	0.00025	U	U		1						0.00025	U	U		1	0.00025	U	U		1	0.00025	U	U		1
METALS	Sodium	mg/L	207				5	514				5	512				5	372				5	195				2						171				1	186				2	198				2
METALS	Thallium	mg/L	0.000119	J	J	15	1	0.000257				1	0.000164	J	J	15	1	0.0000673	J	J	15	1	0.0000568	J	J	15	1						0.000135	J	J	15	1	0.00005	U	U		1	0.0000675	J	J	15	1
METALS	Vanadium	mg/L	0.025	U	U		5	0.005	U	U		1	0.005	U	U		1	0.005	U	U		1	0.005	U	U		1						0.005	U	U		1	0.0075	J	J	15	1	0.005	U	U		1
METALS	Zinc	mg/L	0.02				1	0.0391				1	0.0399				1	0.0193	J	J	15	1	0.017	J	J	15	1						0.0313				1	0.00919	J	J,B	15, 06A, 06B	1	0.027				1
VOLATILES	1,1,1,2-Tetrachloroethane	µg/L																																												
VOLATILES	1,1,1-Trichloroethane	µg/L																																												
VOLATILES	1,1,2,2-Tetrachloroethane	µg/L																																											
VOLATILES	1,1,2-Trichloroethane	µg/L																																												
VOLATILES	1,1-Dichloroethane	µg/L																																												
VOLATILES	1,1-Dichloroethene	µg/L																																												
VOLATILES	1,1-Dichloropropene	µg/L																																												
VOLATILES	1,2,3-Trichlorobenzene	µg/L																																												
VOLATILES	1,2,3-Trichloropropane	µg/L																																												
VOLATILES	1,2,4-Trichlorobenzene	µg/L																																												
VOLATILES	1,2,4-Trimethylbenzene	µg/L																																												
VOLATILES	1,2-Dibromo-3-chloropropane	µg/L																																												
VOLATILES	1,2-Dibromoethane	µg/L																																												
VOLATILES	1,2-Dichlorobenzene	µg/L																																												
VOLATILES	1,2-Dichloroethane	µg/L																																												
VOLATILES	1,2-Dichloropropane	µg/L																																												
VOLATILES	1,2-Dimethylbenzene (o-Xylene)	µg/L																																												
VOLATILES	1,3,5-Trimethylbenzene	µg/L																																												
VOLATILES	1,3-Dichlorobenzene	µg/L																																												
VOLATILES	1,3-Dichloropropane	µg/L																																												
VOLATILES	1,4-Dichlorobenzene	µg/L																																												
VOLATILES	2,2-Dichloropropane	µg/L																																												
VOLATILES	2-Butanone	µg/L																																												
VOLATILES	2-Chloroethyl vinyl ether	µg/L																																												
VOLATILES	2-Chlorotoluene	µg/L																																												
VOLATILES	2-Hexanone	µg/L																																											
VOLATILES	4-Chlorotoluene	µg/L																																												
VOLATILES	Acetone	µg/L																																											
VOLATILES	Benzene	µg/L																																												
VOLATILES	Bromobenzene	µg/L																																												
VOLATILES	Bromochloromethane	µg/L																																												
VOLATILES	Bromodichloromethane	µg/L																																												
VOLATILES	Bromoform	µg/L																																												
VOLATILES	Bromomethane	µg/L																																											

Table D-1

Test Group	Parameter	Units	Location Code	114					116					116					118					29WW01					29WW01					29WW02					29WW04					29WW07				
			Sample Date	20-Oct-08					21-Oct-08					21-Oct-08					20-Oct-08					23-Oct-08					21-Jan-09					23-Oct-08					25-Oct-08					25-Oct-08				
			Sample No.	MW114-102008					MW116-102108					MW116-102108-FD					MW118-102008					29WW01-102308					29WW01-012109					29WW02-102308					29WW04-102508					29WW07-102508				
			Sample Purpose	REG					REG					FD					REG					REG					REG					REG					REG					REG				
			Result	Qual	ValQual	RC	DF	Result	Qual	ValQual	RC	DF	Result	Qual	ValQual	RC	DF	Result	Qual	ValQual	RC	DF	Result	Qual	ValQual	RC	DF	Result	Qual	ValQual	RC	DF	Result	Qual	ValQual	RC	DF	Result	Qual	ValQual	RC	DF	Result	Qual	ValQual	RC	DF
VOLATILES	Carbon disulfide	µg/L																																													
VOLATILES	Carbon tetrachloride	µg/L																																													
VOLATILES	Chlorobenzene	µg/L																																													
VOLATILES	Chloroethane	µg/L																																													
VOLATILES	Chloroform	µg/L																																												
VOLATILES	Chloromethane	µg/L																																												
VOLATILES	cis-1,2-Dichloroethene	µg/L																																												
VOLATILES	cis-1,3-Dichloropropene	µg/L																																												
VOLATILES	Dibromochloromethane	µg/L																																												
VOLATILES	Dibromomethane	µg/L																																												
VOLATILES	Dichlorodifluoromethane	µg/L																																												
VOLATILES	Ethylbenzene	µg/L																																												
VOLATILES	Hexachlorobutadiene	µg/L																																												
VOLATILES	Isopropylbenzene	µg/L																																												
VOLATILES	m,p-Xylenes	µg/L																																												
VOLATILES	Methyl isobutyl ketone	µg/L																																											
VOLATILES	Methylene chloride	µg/L																																											
VOLATILES	Naphthalene	µg/L																																												
VOLATILES	n-BUTYLBENZENE	µg/L																																											
VOLATILES	n-PROPYLBENZENE	µg/L																																												
VOLATILES	p-ISOPROPYLTOLUENE	µg/L																																											
VOLATILES	sec-BUTYLBENZENE	µg/L																																											
VOLATILES	Styrene	µg/L																																												
VOLATILES	tert-BUTYLBENZENE	µg/L																																												
VOLATILES	Tetrachloroethene	µg/L																																												
VOLATILES	Toluene	µg/L																																											
VOLATILES	trans-1,2-Dichloroethene	µg/L																																												
VOLATILES	trans-1,3-Dichloropropene	µg/L																																												
VOLATILES	Trichloroethene	µg/L																																												
VOLATILES	Trichlorofluoromethane	µg/L																																												
VOLATILES	Vinyl acetate	µg/L																																											
VOLATILES	Vinyl chloride	µg/L																																												

Table D-1

Test Group	Parameter	Units	Location Code	29WW08					29WW10					29WW13					29WW16					29WW19					29WW24					29WW25					29WW25					29WW26				
			Sample Date	24-Oct-08					21-Oct-08					24-Oct-08					28-Oct-08					21-Oct-08					27-Oct-08					21-Jan-09					21-Oct-08					24-Oct-08				
			Sample No.	29WW08-102408					29WW10-102108					29WW13-102408					29WW16-102808					29WW19-102108					29WW24-102508					29WW25-012109					29WW25-102108					29WW26-102408				
			Sample Purpose	REG					REG					REG					REG					REG					REG					REG					REG					REG				
			Result	Qual	ValQual	RC	DF	Result	Qual	ValQual	RC	DF	Result	Qual	ValQual	RC	DF	Result	Qual	ValQual	RC	DF	Result	Qual	ValQual	RC	DF	Result	Qual	ValQual	RC	DF	Result	Qual	ValQual	RC	DF	Result	Qual	ValQual	RC	DF	Result	Qual	ValQual	RC	DF
FIELD TESTS	Dissolved Oxygen	mg/L	2.76				1	1.57				1	3.76				1	1.92				1	2.9				1	3.58				1						1.46				1	4.09				1
FIELD TESTS	Oxygen Reduction Potential	mV	32.1				1	52.4				1	31.6				1	-48.1				1	46.9				1	-78.1				1						45.9				1	-39.2				1
FIELD TESTS	pH	pH UNITS	8.01				1	6.76				1	7.02				1	6.96				1	6.39				1	7.54				1						5.83				1	6.46				1
FIELD TESTS	Specific Conductivity	uS/cm	1.004				1	1.907				1	0.937				1	1.482				1	4.26				1	1.065				1						3.598				1	1.385				1
FIELD TESTS	Temperature	Deg C	21.37				1	17.69				1	18.05				1	17.98				1	18.95				1	15.62				1						22.59				1	18.53				1
FIELD TESTS	Turbidity	NTU	43				1	25.3				1	31.4				1	0				1	8.6				1	1.4				1						237.1				1	19.8				1
METALS	Aluminum	mg/L	0.713				1	0.05	U	U		1	0.05	U	U		1						0.05	U	U		1											0.05	U	U		1	0.05	U	U		1
METALS	Antimony	mg/L	0.00145				1	0.00025	U	U		1	0.00025	U	U		1						0.00025	U	U		1											0.00125	U	U		5	0.00025	U	U		1
METALS	Arsenic	mg/L	0.0401				1	0.00136				1	0.00029	J	J	15	1						0.00407				1											0.141				5	0.00169				1
METALS	Barium	mg/L	0.059				1	0.11				1	0.538				50						0.019				1											0.133				5	0.0257				1
METALS	Beryllium	mg/L	0.0005	U	U		1	0.0005	U	U		1	0.0005	U	U		1						0.0005	U	U		1											0.0005	U	U		1	0.0005	U	U		1
METALS	Cadmium	mg/L	0.000528				1	0.000777				1	0.000125	U	U		1						0.000125	U	U		1											0.000756	J	J	15	5	0.000503				1
METALS	Calcium	mg/L	6.62				1	80.1				2	71.7				1						366				2											257				5	81.9				1
METALS	Chromium	mg/L	0.00684				1	0.0341				1	0.00643				1						0.0158				1						0.0371				10	0.199				5	0.0734				1
METALS	Cobalt	mg/L	0.0025	U	U		1	0.00494	J	J	15	1	0.0025	U	U		1						0.0025	U	U		1											0.0572				1	0.034				1
METALS	Copper	mg/L	0.00267				1	0.00769				1	0.0005	U	U		1						0.00486				1											0.00898	J	J	15	5	0.00177	J	J	15	1
METALS	Iron	mg/L	0.548				1	0.665				2	0.0836	J	J	15	1						0.561				2											17.3				5	11.5				1
METALS	Lead	mg/L	0.00742				1	0.00025	U	U		1	0.00025	U	U		1						0.00025	U	U		1											0.0127				5	0.00025	U	U		1
METALS	Magnesium	mg/L	1.47				1	62.2				1	31.8				1						264				1											159				1	56.1				1
METALS	Manganese	mg/L	0.0528				1	0.143				1	0.0149				1						0.86				50											0.762				5	0.607				50
METALS	Mercury	mg/L	0.0001	U	U		1	0.0001	U	U		1	0.0001	U	U		1						0.0001	U	U		1											0.0001	U	U		1	0.0001	U	U		1
METALS	Nickel	mg/L	0.0035	J	J	15	1	0.292				50	0.00421				1						0.134				1											0.485				5	2.12				50
METALS	Potassium	mg/L	1.78				1	0.534	J	J	15	1	2.73				1						5.47				1											4.26				1	2.62				1
METALS	Selenium	mg/L	0.0024				1	0.00639				1	0.00085	J	J	15	1						0.0176				1											0.0396				5	0.00957				1
METALS	Silver	mg/L	0.00025	U	U		1	0.00025	U	U		1	0.00025	U	U		1						0.00025	U	U		1											0.00125	U	U		5	0.00025	U	U		1
METALS	Sodium	mg/L	225				2	206				5	87				1						218				5											210				5	133				1
METALS	Thallium	mg/L	0.0000915	J	J	15	1	0.00005	U	U		1	0.00005	U	U		1						0.000107	J	J	15	1											0.000339	J	J	15	5	0.000155	J	J	15	1
METALS	Vanadium	mg/L	0.005	U	U		1	0.05	U	U		10	0.005	U	U		1						0.025	U	U		5											0.025	U	U		5	0.005	U	U		1
METALS	Zinc	mg/L	0.125				1	0.0151	J	J	15	1	0.0116	J	J,B	15, 06A, 06B	1						0.018	J	J	15	1											0.0311				1	0.0159	J	J,B	15, 06A, 06B	1
VOLATILES	1,1,1,2-Tetrachloroethane	µg/L											0.25	U	U		1	12500	U	U		50000					0.25	U	U		1															
VOLATILES	1,1,1-Trichloroethane	µg/L											0.25	U	U		1	12500	U	U		50000					0.25	U	U		1															
VOLATILES	1,1,2,2-Tetrachloroethane	µg/L											0.125	U	U		1	6250	U	U		50000					0.125	U	U		1															
VOLATILES	1,1,2-Trichloroethane	µg/L											0.25	U	U		1	12500	U	U		50000					0.25	U	U		1															
VOLATILES	1,1-Dichloroethane	µg/L											0.125	U	U		1	6250	U	U		50000					0.125	U	U		1															
VOLATILES	1,1-Dichloroethene	µg/L											0.5	U	U		1	25000	U	U		50000					0.5	U	U		1															
VOLATILES	1,1-Dichloropropene	µg/L											0.25	U	U		1	12500	U	U		50000					0.25	U	U		1															
VOLATILES	1,2,3-Trichlorobenzene	µg/L											0.15	U	U		1	7500	U	U		50000					0.15	U	U		1															
VOLATILES	1,2,3-Trichloropropane	µg/L											0.5	U	U		1	25000	U	U		50000					0.5	U	U		1															
VOLATILES	1,2,4-Trichlorobenzene	µg/L											0.2	U	U		1	10000	U	U		50000					0.2	U	U		1															
VOLATILES	1,2,4-Trimethylbenzene	µg/L											0.25	U	U		1	12500	U	U		50000					0.25	U	U		1															
VOLATILES	1,2-Dibromo-3-chloropropane	µg/L											1	U	U		1	50000	U	U		50000					1	U	U		1															
VOLATILES	1,2-Dibromoethane	µg/L											0.25	U	U		1	12500	U	U		50000					0.25	U	U		1															
VOLATILES	1,2-Dichlorobenzene	µg/L											0.125	U	U		1	6250	U	U		50000					0.125	U	U		1															
VOLATILES	1,2-Dichloroethane	µg/L											0.25	U	U		1	12500	U	U		50000					0.25	U	U		1															
VOLATILES	1,2-Dichloropropane	µg/L											0.2	U	U		1	10000	U	U		50000					0.2	U	U		1															
VOLATILES	1,2-Dimethylbenzene (o-Xylene)	µg/L											0.25	U	U		1	12500	U	U		50000					0.25	U	U		1															
VOLATILES	1,3,5-Trimethylbenzene	µg/L											0.25	U	U		1	12500	U	U		50000					0.25	U	U		1															
VOLATILES	1,3-Dichlorobenzene	µg/L											0.25	U	U		1	12500	U	U		50000					0.25	U	U		1															
VOLATILES	1,3-Dichloropropane	µg/L											0.2	U	U		1	10000	U	U		50000					0.2	U	U		1															
VOLATILES	1,4-Dichlorobenzene	µg/L											0.125	U	U		1	6250	U	U		50000					0.125	U	U		1															
VOLATILES	2,2-Dichloropropane	µg/L											0.25	U	U		1	12500	U	U		50000					0.25	U	U		1															
VOLATILES	2-Butanone	µg/L											2.5	U	U		1	125000	U	U		50000					2.5	U	U		1															
VOLATILES	2-Chloroethyl vinyl ether	µg/L											2	U	U		1	100000	U	U		50000					2	U	U		1															
VOLATILES	2-Chlorotoluene	µg/L											0.125	U	U		1	6250	U	U		50000					0.125	U	U		1															
VOLATILES	2-Hexanone	µg/L											2.5	U	U		1	125000	U	U		50000					2.5	U	U		1															
VOLATILES	4-Chlorotoluene	µg/L											0.25	U	U		1	12500	U	U		50000					0.25	U	U		1															
VOLATILES	Acetone	µg/L											2.5	U	U		1	125000	U	U		50000					2.5	U	U		1															
VOLATILES	Benzene	µg/L											0.125	U	U		1	6250	U	U		50000					0.125	U	U		1															
VOLATILES	Bromobenzene	µg/L											0.125	U	U		1	6250	U	U		50000					0.125	U	U		1															
VOLATILES	Bromochloromethane	µg/L											0.2	U	U		1	38200	J	J	15	50000					0.2	U	U		1															
VOLATILES	Bromodichloromethane	µg/L											0.25	U	U		1	12500	U	U		50000					0.25	U	U		1															
VOLATILES	Bromoform	µg/L											0.5	U	U		1	25000	U	U		50000					0.5	U	U		1															
VOLATILES	Bromomethane	µg/L											0.5	U	U		1	25000	U	U		50000					0.5	U	U		1															

Table D-1

	Location Code	29WW08					29WW10					29WW13					29WW16					29WW19					29WW24					29WW25					29WW25					29WW26				
	Sample Date	24-Oct-08					21-Oct-08					24-Oct-08					28-Oct-08					21-Oct-08					27-Oct-08					21-Jan-09					21-Oct-08					24-Oct-08				
	Sample No.	29WW08-102408					29WW10-102108					29WW13-102408					29WW16-102808					29WW19-102108					29WW24-102508					29WW25-012109					29WW25-102108					29WW26-102408				
	Sample Purpose	REG					REG					REG					REG					REG					REG					REG					REG					REG				
Test Group	Parameter	Units	Result	Qual	ValQual	RC	DF	Result	Qual	ValQual	RC	DF	Result	Qual	ValQual	RC	DF	Result	Qual	ValQual	RC	DF	Result	Qual	ValQual	RC	DF	Result	Qual	ValQual	RC	DF	Result	Qual	ValQual	RC	DF	Result	Qual	ValQual	RC	DF	Result	Qual	ValQual	RC	DF
VOLATILES	Carbon disulfide	µg/L											0.5	U	U		1	25000	U	UJ,L	11A	50000						0.5	U	U		1															
VOLATILES	Carbon tetrachloride	µg/L											0.25	U	U		1	12500	U	U		50000						0.25	U	U		1															
VOLATILES	Chlorobenzene	µg/L											0.125	U	U		1	6250	U	U		50000						0.125	U	U		1															
VOLATILES	Chloroethane	µg/L											0.5	U	U		1	25000	U	U		50000						0.5	U	U		1															
VOLATILES	Chloroform	µg/L											0.125	U	U		1	6250	U	U		50000						0.125	U	U		1															
VOLATILES	Chloromethane	µg/L											0.25	U	U		1	12500	U	U		50000						0.25	U	U		1															
VOLATILES	cis-1,2-Dichloroethene	µg/L											0.25	U	U		1	12500	U	U		50000						0.25	U	U		1															
VOLATILES	cis-1,3-Dichloropropene	µg/L											0.25	U	U		1	12500	U	U		50000						0.25	U	U		1															
VOLATILES	Dibromochloromethane	µg/L											0.25	U	U		1	12500	U	U		50000						0.25	U	U		1															
VOLATILES	Dibromomethane	µg/L											0.25	U	U		1	12500	U	U		50000						0.25	U	U		1															
VOLATILES	Dichlorodifluoromethane	µg/L											0.25	U	U		1	12500	U	U		50000						0.25	U	U		1															
VOLATILES	Ethylbenzene	µg/L											0.25	U	U		1	12500	U	U		50000						0.25	U	U		1															
VOLATILES	Hexachlorobutadiene	µg/L											0.25	U	U		1	12500	U	U		50000						0.25	U	U		1															
VOLATILES	Isopropylbenzene	µg/L											0.25	U	U		1	12500	U	U		50000						0.25	U	U		1															
VOLATILES	m,p-Xylenes	µg/L											0.5	U	U		1	25000	U	U		50000						0.5	U	U		1															
VOLATILES	Methyl isobutyl ketone	µg/L											2.5	U	U		1	125000	U	U		50000						2.5	U	U		1															
VOLATILES	Methylene chloride	µg/L											0.25	U	U		1	10300000				100000						0.25	U	U		1															
VOLATILES	Naphthalene	µg/L											0.2	U	U		1	10000	U	U		50000						0.2	U	U		1															
VOLATILES	n-BUTYLBENZENE	µg/L											0.25	U	U		1	12500	U	U		50000						0.25	U	U		1															
VOLATILES	n-PROPYLBENZENE	µg/L											0.125	U	U		1	6250	U	U		50000						0.125	U	U		1															
VOLATILES	p-ISOPROPYLTOLUENE	µg/L											0.25	U	U		1	12500	U	U		50000						0.25	U	U		1															
VOLATILES	sec-BUTYLBENZENE	µg/L											0.25	U	U		1	12500	U	U		50000						0.25	U	U		1															
VOLATILES	Styrene	µg/L											0.125	U	U		1	6250	U	U		50000						0.125	U	U		1															
VOLATILES	tert-BUTYLBENZENE	µg/L											0.25	U	U		1	12500	U	U		50000						0.25	U	U		1															
VOLATILES	Tetrachloroethene	µg/L											0.25	U	U		1	12500	U	U		50000						0.25	U	U		1															
VOLATILES	Toluene	µg/L											0.25	U	U		1	12500	U	U		50000						0.25	U	U		1															
VOLATILES	trans-1,2-Dichloroethene	µg/L											0.25	U	U		1	12500	U	U		50000						0.25	U	U		1															
VOLATILES	trans-1,3-Dichloropropene	µg/L											0.5	U	U		1	25000	U	U		50000						0.5	U	U		1															
VOLATILES	Trichloroethene	µg/L											0.25	U	U		1	12500	U	U		50000						0.25	U	U		1															
VOLATILES	Trichlorofluoromethane	µg/L											0.25	U	U		1	12500	U	U		50000						0.25	U	U		1															
VOLATILES	Vinyl acetate	µg/L											2.5	U	U		1	125000	U	U		50000						2.5	U	U		1															
VOLATILES	Vinyl chloride	µg/L											0.25	U	U		1	12500	U	U		50000						0.25	U	U		1															

Table D-1

	Location Code		29WW27					29WW29					29WW29				
	Sample Date		23-Oct-08					23-Oct-08					21-Jan-09				
	Sample No.		29WW27-102308					29WW29-102308					29WW29-012109				
	Sample Purpose		REG					REG					REG				
Test Group	Parameter	Units	Result	Qual	ValQual	RC	DF	Result	Qual	ValQual	RC	DF	Result	Qual	ValQual	RC	DF
FIELD TESTS	Dissolved Oxygen	mg/L	17.9				1	5.03				1					
FIELD TESTS	Oxygen Reduction Potential	mV	5.3				1	53				1					
FIELD TESTS	pH	pH UNITS	6.81				1	6.85				1					
FIELD TESTS	Specific Conductivity	uS/cm	2.471				1	2.79				1					
FIELD TESTS	Temperature	Deg C	18.01				1	18.53				1					
FIELD TESTS	Turbidity	NTU	26.3				1	1.3				1					
METALS	Aluminum	mg/L	0.05	U	U		1	0.05	U	U		1					
METALS	Antimony	mg/L	0.00025	U	U		1	0.00025	U	U		1					
METALS	Arsenic	mg/L	0.00244				1	0.0039				1					
METALS	Barium	mg/L	0.0416				1	0.144				1					
METALS	Beryllium	mg/L	0.000517	J	J	15	1	0.0005	U	U		1					
METALS	Cadmium	mg/L	0.000125	U	U		1	0.000354	J	J	15	1					
METALS	Calcium	mg/L	186				1	206				1					
METALS	Chromium	mg/L	0.0242				1	0.289				50	0.579				10
METALS	Cobalt	mg/L	0.0025	U	U		1	0.0025	U	U		1					
METALS	Copper	mg/L	0.00116	J	J	15	1	0.00432				1					
METALS	Iron	mg/L	0.503				1	0.786				1					
METALS	Lead	mg/L	0.00025	U	U		1	0.00025	U	U		1					
METALS	Magnesium	mg/L	95.8				1	109				1					
METALS	Manganese	mg/L	0.168				1	0.0362				1					
METALS	Mercury	mg/L	0.0001	U	U		1	0.0001	U	U		1					
METALS	Nickel	mg/L	1.12				50	1.4				50					
METALS	Potassium	mg/L	3.29				1	4.17				1					
METALS	Selenium	mg/L	0.0107				1	0.0158				1					
METALS	Silver	mg/L	0.00025	U	U		1	0.00025	U	U		1					
METALS	Sodium	mg/L	197				2	179				1					
METALS	Thallium	mg/L	0.0000983	J	J	15	1	0.000237				1					
METALS	Vanadium	mg/L	0.005	U	U		1	0.025	U	U		5					
METALS	Zinc	mg/L	0.0159	J	J,B	15, 06A, 06B	1	0.018	J	J,B	15, 06A, 06B	1					
VOLATILES	1,1,1,2-Tetrachloroethane	µg/L															
VOLATILES	1,1,1-Trichloroethane	µg/L															
VOLATILES	1,1,2,2-Tetrachloroethane	µg/L															
VOLATILES	1,1,2-Trichloroethane	µg/L															
VOLATILES	1,1-Dichloroethane	µg/L															
VOLATILES	1,1-Dichloroethene	µg/L															
VOLATILES	1,1-Dichloropropene	µg/L															
VOLATILES	1,2,3-Trichlorobenzene	µg/L															
VOLATILES	1,2,3-Trichloropropane	µg/L															
VOLATILES	1,2,4-Trichlorobenzene	µg/L															
VOLATILES	1,2,4-Trimethylbenzene	µg/L															
VOLATILES	1,2-Dibromo-3-chloropropane	µg/L															
VOLATILES	1,2-Dibromoethane	µg/L															
VOLATILES	1,2-Dichlorobenzene	µg/L															
VOLATILES	1,2-Dichloroethane	µg/L															
VOLATILES	1,2-Dichloropropane	µg/L															
VOLATILES	1,2-Dimethylbenzene (o-Xylene)	µg/L															
VOLATILES	1,3,5-Trimethylbenzene	µg/L															
VOLATILES	1,3-Dichlorobenzene	µg/L															
VOLATILES	1,3-Dichloropropane	µg/L															
VOLATILES	1,4-Dichlorobenzene	µg/L															
VOLATILES	2,2-Dichloropropane	µg/L															
VOLATILES	2-Butanone	µg/L															
VOLATILES	2-Chloroethyl vinyl ether	µg/L															
VOLATILES	2-Chlorotoluene	µg/L															
VOLATILES	2-Hexanone	µg/L															
VOLATILES	4-Chlorotoluene	µg/L															
VOLATILES	Acetone	µg/L															
VOLATILES	Benzene	µg/L															
VOLATILES	Bromobenzene	µg/L															
VOLATILES	Bromochloromethane	µg/L															
VOLATILES	Bromodichloromethane	µg/L															
VOLATILES	Bromoform	µg/L															
VOLATILES	Bromomethane	µg/L															

	Location Code		29WW30					29WW30					29WW30				
	Sample Date		23-Oct-08					23-Oct-08					21-Jan-09				
	Sample No.		29WW30-102308					29WW30-102308-FD					29WW30-012109				
	Sample Purpose		REG					FD					REG				
Test Group	Parameter	Units	Result	Qual	ValQual	RC	DF	Result	Qual	ValQual	RC	DF	Result	Qual	ValQual	RC	DF
FIELD TESTS	Dissolved Oxygen	mg/L	5.02				1										
FIELD TESTS	Oxygen Reduction Potential	mV	51.1				1										
FIELD TESTS	pH	pH UNITS	6.52				1										
FIELD TESTS	Specific Conductivity	uS/cm	3.202				1										
FIELD TESTS	Temperature	Deg C	16.6				1										
FIELD TESTS	Turbidity	NTU	61.9				1										
METALS	Aluminum	mg/L	0.05	U	U		1	0.05	U	U		1					
METALS	Antimony	mg/L	0.00025	U	U		1	0.00025	U	U		1					
METALS	Arsenic	mg/L	0.00443				1	0.00431				1					
METALS	Barium	mg/L	0.102				1	0.108				1					
METALS	Beryllium	mg/L	0.0005	U	U		1	0.0005	U	U		1					
METALS	Cadmium	mg/L	0.00038	J	J	15	1	0.000338	J	J	15	1					
METALS	Calcium	mg/L	200				1	194				1					
METALS	Chromium	mg/L	0.115				1	0.149				1	0.0572				10
METALS	Cobalt	mg/L	0.0025	U	U		1	0.0025	U	U		1					
METALS	Copper	mg/L	0.00241				1	0.00255				1					
METALS	Iron	mg/L	1.44				1	1.68				1					
METALS	Lead	mg/L	0.00025	U	U		1	0.00025	U	U		1					
METALS	Magnesium	mg/L	117				1	115				1					
METALS	Manganese	mg/L	0.017				1	0.0164				1					
METALS	Mercury	mg/L	0.0001	U	U		1	0.0001	U	U		1					
METALS	Nickel	mg/L	1.61				50	1.49				50					
METALS	Potassium	mg/L	3.88				1	3.82				1					
METALS	Selenium	mg/L	0.0198				1	0.0206				1					
METALS	Silver	mg/L	0.00025	U	U		1	0.00025	U	U		1					
METALS	Sodium	mg/L	294				2	281				2					
METALS	Thallium	mg/L	0.0001	J	J	15	1	0.0000943	J	J	15	1					
METALS	Vanadium	mg/L	0.005	U	U		1	0.005	U	U		1					
METALS	Zinc	mg/L	0.0192	J	J,B	15, 06A, 06B	1	0.0181	J	J,B	15, 06A, 06B	1					
VOLATILES	1,1,1,2-Tetrachloroethane	µg/L															
VOLATILES	1,1,1-Trichloroethane	µg/L															
VOLATILES	1,1,2,2-Tetrachloroethane	µg/L															
VOLATILES	1,1,2-Trichloroethane	µg/L															
VOLATILES	1,1-Dichloroethane	µg/L															
VOLATILES	1,1-Dichloroethene	µg/L															
VOLATILES	1,1-Dichloropropene	µg/L															
VOLATILES	1,2,3-Trichlorobenzene	µg/L															
VOLATILES	1,2,3-Trichloropropane	µg/L															
VOLATILES	1,2,4-Trichlorobenzene	µg/L															
VOLATILES	1,2,4-Trimethylbenzene	µg/L															
VOLATILES	1,2-Dibromo-3-chloropropane	µg/L															
VOLATILES	1,2-Dibromoethane	µg/L															
VOLATILES	1,2-Dichlorobenzene	µg/L															
VOLATILES	1,2-Dichloroethane	µg/L															
VOLATILES	1,2-Dichloropropane	µg/L															
VOLATILES	1,2-Dimethylbenzene (o-Xylene)	µg/L															
VOLATILES	1,3,5-Trimethylbenzene	µg/L															
VOLATILES	1,3-Dichlorobenzene	µg/L															
VOLATILES	1,3-Dichloropropane	µg/L															
VOLATILES	1,4-Dichlorobenzene	µg/L															
VOLATILES	2,2-Dichloropropane	µg/L															
VOLATILES	2-Butanone	µg/L															
VOLATILES	2-Chloroethyl vinyl ether	µg/L															
VOLATILES	2-Chlorotoluene	µg/L															
VOLATILES	2-Hexanone	µg/L															
VOLATILES	4-Chlorotoluene	µg/L															
VOLATILES	Acetone	µg/L															
VOLATILES	Benzene	µg/L															
VOLATILES	Bromobenzene	µg/L															
VOLATILES	Bromochloromethane	µg/L															
VOLATILES	Bromodichloromethane	µg/L															
VOLATILES	Bromoform	µg/L															
VOLATILES	Bromomethane	µg/L															

	Location Code		29WW33					29WW35					29WW41				
	Sample Date		25-Oct-08					27-Oct-08					10-Jun-09				
	Sample No.		29WW33-102508					29WW35-102708					29WW41-090610				
	Sample Purpose		REG					REG					REG				
Test Group	Parameter	Units	Result	Qual	ValQual	RC	DF	Result	Qual	ValQual	RC	DF	Result	Qual	ValQual	RC	DF
FIELD TESTS	Dissolved Oxygen	mg/L	5.21				1	2.07				1	3.53				1
FIELD TESTS	Oxygen Reduction Potential	mV	2.9				1	-82.1				1	225.9				1
FIELD TESTS	pH	pH UNITS	6.81				1	7.44				1	7.72				1
FIELD TESTS	Specific Conductivity	uS/cm	1.722				1	0.859				1	0.792				1
FIELD TESTS	Temperature	Deg C	20.21				1	17.84				1	25.24				1
FIELD TESTS	Turbidity	NTU	0				1	2.8				1	8.2				1
METALS	Aluminum	mg/L	0.05	U	U		1										
METALS	Antimony	mg/L	0.00025	U	U		1										
METALS	Arsenic	mg/L	0.00338				1										
METALS	Barium	mg/L	0.0414				1										
METALS	Beryllium	mg/L	0.000501	J	J	15	1										
METALS	Cadmium	mg/L	0.000125	U	U		1										
METALS	Calcium	mg/L	338				1										
METALS	Chromium	mg/L	0.0324				1										
METALS	Cobalt	mg/L	0.00815				1										
METALS	Copper	mg/L	0.00557				1										
METALS	Iron	mg/L	0.596				1										
METALS	Lead	mg/L	0.00025	U	U		1										
METALS	Magnesium	mg/L	155				1										
METALS	Manganese	mg/L	0.296				50										
METALS	Mercury	mg/L	0.0001	U	U		1										
METALS	Nickel	mg/L	0.424				50										
METALS	Potassium	mg/L	4.72				1										
METALS	Selenium	mg/L	0.0139				1										
METALS	Silver	mg/L	0.00025	U	U		1										
METALS	Sodium	mg/L	168				1										
METALS	Thallium	mg/L	0.000082	J	J	15	1										
METALS	Vanadium	mg/L	0.005	U	U		1										
METALS	Zinc	mg/L	0.0219				1										
VOLATILES	1,1,1,2-Tetrachloroethane	µg/L						0.25	U	U		1	0.25	U	U		1
VOLATILES	1,1,1-Trichloroethane	µg/L						0.25	U	U		1	0.25	U	U		1
VOLATILES	1,1,2,2-Tetrachloroethane	µg/L						0.125	U	U		1	0.125	U	U		1
VOLATILES	1,1,2-Trichloroethane	µg/L						0.25	U	U		1	0.25	U	U		1
VOLATILES	1,1-Dichloroethane	µg/L						0.125	U	U		1	0.125	U	U		1
VOLATILES	1,1-Dichloroethene	µg/L						0.5	U	U		1	0.5	U	U		1
VOLATILES	1,1-Dichloropropene	µg/L						0.25	U	U		1	0.25	U	U		1
VOLATILES	1,2,3-Trichlorobenzene	µg/L						0.15	U	U		1	0.15	U	U		1
VOLATILES	1,2,3-Trichloropropane	µg/L						0.5	U	U		1	0.5	U	U		1
VOLATILES	1,2,4-Trichlorobenzene	µg/L						0.2	U	U		1	0.2	U	U		1
VOLATILES	1,2,4-Trimethylbenzene	µg/L						0.25	U	U		1	0.25	U	U		1
VOLATILES	1,2-Dibromo-3-chloropropane	µg/L						1	U	U		1	1	U	U		1
VOLATILES	1,2-Dibromoethane	µg/L						0.25	U	U		1	0.25	U	U		1
VOLATILES	1,2-Dichlorobenzene	µg/L						0.125	U	U		1	0.125	U	U		1
VOLATILES	1,2-Dichloroethane	µg/L						0.25	U	U		1	0.25	U	U		1
VOLATILES	1,2-Dichloropropane	µg/L						0.2	U	U		1	0.2	U	U		1
VOLATILES	1,2-Dimethylbenzene (o-Xylene)	µg/L						0.25	U	U		1	0.25	U	U		1
VOLATILES	1,3,5-Trimethylbenzene	µg/L						0.25	U	U		1	0.25	U	U		1
VOLATILES	1,3-Dichlorobenzene	µg/L						0.25	U	U		1	0.25	U	U		1
VOLATILES	1,3-Dichloropropane	µg/L						0.2	U	U		1	0.2	U	U		1
VOLATILES	1,4-Dichlorobenzene	µg/L						0.125	U	U		1	0.125	U	U		1
VOLATILES	2,2-Dichloropropane	µg/L						0.25	U	U		1	0.25	U	U		1
VOLATILES	2-Butanone	µg/L						2.5	U	U		1	2.5	U	U		1
VOLATILES	2-Chloroethyl vinyl ether	µg/L						2	U	U		1	2	U	U		1
VOLATILES	2-Chlorotoluene	µg/L						0.125	U	U		1	0.125	U	U		1
VOLATILES	2-Hexanone	µg/L						2.5	U	U		1	2.5	U	U		1
VOLATILES	4-Chlorotoluene	µg/L						0.25	U	U		1	0.25	U	UJL	11A	1
VOLATILES	Acetone	µg/L						2.5	U	U		1	2.5	U	U		1
VOLATILES	Benzene	µg/L						0.125	U	U		1	0.125	U	U		1
VOLATILES	Bromobenzene	µg/L						0.125	U	U		1	0.125	U	U		1
VOLATILES	Bromochloromethane	µg/L						0.2	U	U		1	0.2	U	U		1
VOLATILES	Bromodichloromethane	µg/L						0.25	U	U		1	0.25	U	U		1
VOLATILES	Bromoform	µg/L						0.5	U	U		1	0.5	U	U		1
VOLATILES	Bromomethane	µg/L						0.995	J	J	15	1	0.5	U	U		1

Table D-1

Test Group	Parameter	Units	Location Code	29WW27					29WW29					29WW29					29WW30					29WW30					29WW30					29WW33					29WW35					29WW41				
			Sample Date	23-Oct-08					23-Oct-08					21-Jan-09					23-Oct-08					23-Oct-08					21-Jan-09					25-Oct-08					27-Oct-08					10-Jun-09				
			Sample No.	29WW27-102308					29WW29-102308					29WW29-012109					29WW30-102308					29WW30-102308-FD					29WW30-012109					29WW33-102508					29WW35-102708					29WW41-090610				
			Sample Purpose	REG					REG					REG					REG					FD					REG					REG					REG					REG				
				Result	Qual	ValQual	RC	DF	Result	Qual	ValQual	RC	DF	Result	Qual	ValQual	RC	DF	Result	Qual	ValQual	RC	DF	Result	Qual	ValQual	RC	DF	Result	Qual	ValQual	RC	DF	Result	Qual	ValQual	RC	DF	Result	Qual	ValQual	RC	DF	Result	Qual	ValQual	RC	DF
VOLATILES	Carbon disulfide	µg/L																																			0.5	U	U		1	0.5	U	U		1
VOLATILES	Carbon tetrachloride	µg/L																																			0.25	U	U		1	0.25	U	U		1
VOLATILES	Chlorobenzene	µg/L																																			0.125	U	U		1	0.125	U	U		1
VOLATILES	Chloroethane	µg/L																																			0.5	U	U		1	0.5	U	U		1
VOLATILES	Chloroform	µg/L																																			0.125	U	U		1	0.125	U	U		1
VOLATILES	Chloromethane	µg/L																																			0.25	U	U		1	0.25	U	U		1
VOLATILES	cis-1,2-Dichloroethene	µg/L																																			0.25	U	U		1	0.25	U	U		1
VOLATILES	cis-1,3-Dichloropropene	µg/L																																			0.25	U	U		1	0.25	U	U		1
VOLATILES	Dibromochloromethane	µg/L																																			0.25	U	U		1	0.25	U	U		1
VOLATILES	Dibromomethane	µg/L																																			0.25	U	U		1	0.25	U	U		1
VOLATILES	Dichlorodifluoromethane	µg/L																																			0.25	U	U		1	0.25	U	U		1
VOLATILES	Ethylbenzene	µg/L																																			0.25	U	U		1	0.25	U	U		1
VOLATILES	Hexachlorobutadiene	µg/L																																			0.25	U	U		1	0.25	U	U		1
VOLATILES	Isopropylbenzene	µg/L																																			0.25	U	U		1	0.25	U	U		1
VOLATILES	m,p-Xylenes	µg/L																																			0.5	U	U		1	0.5	U	U		1
VOLATILES	Methyl isobutyl ketone	µg/L																																			2.5	U	U		1	2.5	U	U		1
VOLATILES	Methylene chloride	µg/L																																			0.25	U	U		1	0.25	U	U		1
VOLATILES	Naphthalene	µg/L																																			0.2	U	U		1	0.2	U	U		1
VOLATILES	n-BUTYLBENZENE	µg/L																																			0.25	U	U		1	0.25	U	U		1
VOLATILES	n-PROPYLBENZENE	µg/L																																			0.125	U	U		1	0.125	U	U		1
VOLATILES	p-ISOPROPYLTOLUENE	µg/L																																			0.25	U	U		1	0.25	U	U		1
VOLATILES	sec-BUTYLBENZENE	µg/L																																			0.25	U	U		1	0.25	U	U		1
VOLATILES	Styrene	µg/L																																			0.125	U	U		1	0.125	U	U		1
VOLATILES	tert-BUTYLBENZENE	µg/L																																			0.25	U	U		1	0.25	U	U		1
VOLATILES	Tetrachloroethene	µg/L																																			0.25	U	U		1	0.25	U	U		1
VOLATILES	Toluene	µg/L																																			0.25	U	U		1	0.25	U	U		1
VOLATILES	trans-1,2-Dichloroethene	µg/L																																			0.25	U	U		1	0.25	U	U		1
VOLATILES	trans-1,3-Dichloropropene	µg/L																																			0.5	U	U		1	0.5	U	U		1
VOLATILES	Trichloroethene	µg/L																																			0.685	J	J	15	1	0.25	U	U		1
VOLATILES	Trichlorofluoromethane	µg/L																																			0.25	U	U		1	0.25	U	U		1
VOLATILES	Vinyl acetate	µg/L																																			2.5	U	U		1	2.5	U	U		1
VOLATILES	Vinyl chloride	µg/L																																			0.25	U	U		1	0.25	U	U		1

Notes and Abbreviations:
06A - method or preparation blank
06B - initial calibration blank (ICB) or continuing calibration blank (CCB)
11A - recovery
15 - quantitation
17 - field duplicate RPD criteria is exceeded
B - The concentration reported was detected in the associated method blank, trip blank, or equipment blank within 5X/10X the blank concentration
Deg C - degrees centigrade
DF - dilution factor
J - The analyte was positively identified; the reported value is the estimated concentration of the constituent detected in the sample analyzed
µg/L - micrograms per liter
mg/L - milligrams per liter
mV - millivolts
NTU - nephelometric turbidity unit
RC - reason code
ValQual - validation qualifier
U - Not detected. The analyte was analyzed for, but not detected above the associated reporting limit.
uS/cm - microsiemens per centimeter

00096590

Drilling Log

Monitoring Well **29WW41**

Project *Longhorn Army Ammunition Plant* Owner *USACE*

Location *Karnack, Texas* Proj. No. *117591*

Surface Elev. *NA* Total Hole Depth *120.0 ft.* North ____ East ____

Top of Casing *NA* Water Level Initial *NA* Static ▼ *46.0 ft.* Diameter *6 in.*

Screen: Dia *2 in.* Length *15 ft.* Type/Size *Sch. 40 PVC/.01 in.*

Casing: Dia *2 in.* Length *103 ft.* Type *Sch. 40 PVC*

Fill Material *NA* Rig/Core *Gardner-Denver*

Drill Co. *Walker-Hill* Method *Wet Rotary*

Driller *Timmy Beach* Log By *A. Willmore* Date *6/9/09* Driller # *NA*

Checked By *A. Willmore* License No. *Tennessee 5456*

COMMENTS
Hand augered 0 to 5 feet bgs.

12" Shallow Zone Isolation Casing set at 50' bgs.

8" Intermediate Zone Isolation Casing set at 90' bgs

Depth (ft.)	Well Completion	PID (ppm)	Sample ID % Recovery	Graphic Log	USCS Class.	Description (Color, Texture, Structure) Geologic Descriptions are Based on the USCS.
						Lithologic description verified with borings 29WW15, 29WW16, and 29WW40
0						CLAY, SILTY, MEDIUM BROWN, MOTTLED, ROOTS, IRON STAINING, BLACK STRIATION, MEDIUM STIFF, SLIGHTLY MOIST TO MOIST, TRACE GRAVEL
2		0.0	100%			
4						-BECOMES SOFT AND WET
6		0.0	100%		CL	-BECOMES VERY STIFF WITH RED STRIATION, SLIGHTLY MOIST
8						
10		0.0	100%		CL	-BECOMES MEDIUM-BROWN TO GRAY WITH TRACE SAND AND ROOTS
12						
14		0.0	100%			
16						
18		0.0	100%			
20					SM	SAND, SILTY, MEDIUM BROWN WITH GRAY LAYERS, MOIST, MEDIUM DENSE TO LOOSE
22		0.2	100%			CLAY, SILTY, MEDIUM-BROWN TO GRAY, LAYERED, SLIGHTLY MOIST, GOLDEN BROWN LAYERS
24						
26		0.5	100%		CL	
28						
30		0.0	75%			

Continued Next Page

00096591

Drilling Log

Monitoring Well **29WW41**

Page: 2 of 4

Project *Longhorn Army Ammunition Plant* Owner *USACE*

Location *Karnack, Texas* Proj. No. *117591*

Depth (ft.)	Well Completion	PID (ppm)	Sample ID % Recovery	Graphic Log	USCS Class.	Description (Color, Texture, Structure) Geologic Descriptions are Based on the USCS.
						Continued
30		4.2	75%			31' - 88' Description taken from log 29WW16, Appendix II of the Draft Site Characterization Summary Report for the Phase III Group 2 Sites RI/FS, Sverdrup, January 2000.
32		3.6	75%			
34		5.7	85%		CL	
36		6.2	85%			
38		2.1	85%		SC	CLAY, SANDY, MEDIUM BROWN TO GRAY, LAMINATED, SLIGHTLY MOIST TO MOIST, SOME SILT, STIFF
40		6.3	90%			CLAY, SILTY, DARK GRAY, VERY STIFF, TRACE SAND, SLIGHTLY MOIST TO MOIST
42		4.3	85%			
44		2.1	85%		CL	
46 ▼		4.1	85%			
48		2.3	85%			
50		3.2	90%		ML	- 12" SHALLOW ZONE ISOLATION CASING SET AT 50' BGS SILT, CLAYEY, SOME SAND, MEDIUM GRAY, MOIST
52		2.1	100%		CL ML	CLAY, SILTY, SOME SAND, MEDIUM GRAY, MOIST, STIFF, LAMINATED
54		3.4	100%		PT	LIGNITE, BLACK, LAYERED
56		4.1	100%			CLAY, SILTY, DARK BROWN WITH BLACK INTERMITTENT ORGANIC CONTENT, VERY HARD, HIGH PLASTICITY, SLIGHTLY MOIST
58		2.2	100%			
60		6.2	100%			
62		6.7	90%		CL	-PLASTICITY INCREASES
64		6.3	100%			
66		6.8	75%			
68		8.2	50%			
70						

Continued Next Page

00096592

Drilling Log

Monitoring Well **29WW41**

Page: 3 of 4

Project *Longhorn Army Ammunition Plant* Owner *USACE*

Location *Kamack, Texas* Proj. No. *117591*

Depth (ft.)	Well Completion	PID (ppm)	Sample ID / % Recovery	Graphic Log	USCS Class.	Description (Color, Texture, Structure) Geologic Descriptions are Based on the USCS.
						Continued
70		10.2	75%		CL	
72		13.2	100%			
74		14.8	75%		SM	SILT, SAND, MEDIUM GRAY, SLIGHTLY MOIST, DENSE
76		15.6	100%		CL	CLAY, SILTY, DARK GRAY AND DARK GREENISH-GRAY, TRACE SAND, SLIGHTLY MOIST, TRACE GRAVEL AND SAND
78		19.8	90%		SM	SAND, SILTY, MEDIUM GRAY, WET, MEDIUM DENSE TO DENSE, TRACE GRAVEL
80		20.1	85%		SP	SAND, POORLY-SORTED, MEDIUM GRAY, WET DENSE
82		25.6	85%		SC	CLAY, SANDY WITH SILT, MEDIUM TO DARK GRAY, LAMINATED, MOIST
84		26.3	85%		CL	CLAY, SILTY, MEDIUM GRAY, SLIGHTLY MOIST, VERY STIFF
86		26.2	85%		ML	SILT, SANDY, MEDIUM GRAY, TRACE CLAY, SLIGHTLY MOIST
88		22.1	90%		CL	CLAY, SILTY, MEDIUM GRAY, TRACE SAND, SLIGHTLY MOIST, VERY STIFF, LAMINATED
90		32.1	100%		SM	SAND, SILTY, MEDIUM GRAY, MOIST
92		40.1	85%		CL	CLAY, SILTY, MEDIUM GRAY, SLIGHTLY MOIST
94		47.5	100%			CLAY, SANDY, MEDIUM GRAY, SLIGHTLY MOIST
96		23.1	85%			- 8" INTERMEDIATE ZONE ISOLATION CASING SET AT 90' BGS
98		15.6	100%			-BECOMES SILTY, LOW PLASTICITY, HARD
100		12.1	100%		CL	-INCREASING SILT
102		13.4	90%			
104		14.5	90%			
106		16.5	90%		PT	LIGNITE, HARD, BLACK, HIGHLY ORGANIC
108		2.3	85%		SM	SAND, SILTY, MOIST, FINE-GRAINED, WELL-GRADED, GRAY
110						

Continued Next Page

MANCHACA Rev: 10/25/04 SITE 29.GPJ 7/1/09

00096593

Drilling Log

Monitoring Well **29WW41**

Page: 4 of 4

Project *Longhorn Army Ammunition Plant* Owner *USACE*

Location *Karnack, Texas* Proj. No. *117591*

Depth (ft.)	Well Completion	PID (ppm)	Sample ID / % Recovery	Graphic Log	USCS Class.	Description (Color, Texture, Structure) Geologic Descriptions are Based on the USCS.
110						*Continued*
112		2.5	85%			
114		2.5	90%		SM	
116		3.2	90%			
118		3.6	100%			
120		1.2	100%		CL	CLAY, SILTY, GRAY, MOIST, LOW PLASTICITY, HARD
122						END OF BORING
124						
126						
128						
130						
132						
134						
136						
138						
140						
142						
144						
146						
148						
150						

MANCHACA Rev: 10/25/04 SITE 29.GPJ 7/1/09

00096594
29W04

WELL COMPLETION FORM (Stickup or Above Grade Completion Well)

FIELD REPRESENTATIVE: A. Willmore
DRILLING CONTRACTOR: WDC
DRILLING TECHNIQUE: Mod rotary
AUGER SIZE AND TYPE: 16" Ø; 10" Ø; 8" Ø
BOREHOLE IDENTIFICATION: 29W04
BOREHOLE DIAMETER: 6"
WELL IDENTIFICATION: 29W04
WELL CONSTRUCTION START DATE: 6-1-09
WELL CONSTRUCTION COMPLETE DATE: 6-10-09 6-9-09
SCREEN MATERIAL: PVC
SCREEN DIAMETER: 2"
STRATUM-SCREENED INTERVAL (FT): 15'
CASING MATERIAL: PVC
CASING DIAMETER: 2"

TYPE OF FILTER PACK: Silica sand
GRADIATION: 20/40
AMOUNT OF FILTER PACK USED: 9 bags
TYPE OF BENTONITE: Portland cement
AMOUNT BENTONITE USED: 1-50 lb bg
TYPE OF CEMENT: portland
AMOUNT CEMENT USED: 6- bags
GROUT MATERIALS USED: bentonite
DIMENSIONS OF SECURITY CASING: 6"x6"
TYPE OF WELL CAP: Plugging Cap
TYPE OF END CAP: PVC
COMMENTS:

SPECIAL CONDITIONS
(describe and draw)

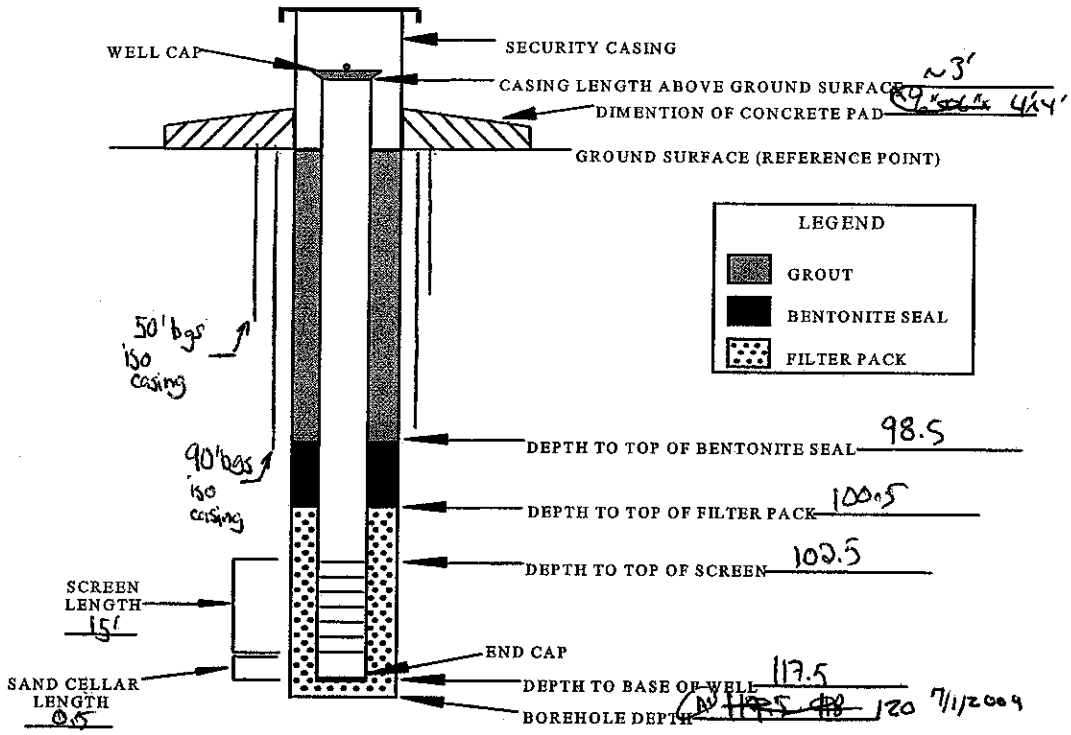

NOT TO SCALE

INSTALLED BY: Timmy WDC
INSTALLATION OBSERVED BY: A. Willmore
DISCREPANCIES: 12" casing (PVC) set at 50' bgs; 8" casing (PVC) 90' bgs.

20000596595

WELL DEVELOPMENT RECORD

WELL/PIEZOMETER ID 29WW41
SHEET 1 OF 1

PROJECT NAME: Longhorn PROJECT NO.: 117591.0006A1100 DATE: 6-10-09

LOCATION: Karnack, TX DATE INSTALLED: 6-10-09

TOTAL DEPTH (FTOC) ~121 (B) CASING DIAMETER 2"

METHODS OF DEVELOPMENT

☐ Swabbing ☐ Bailing ☑ Pumping ☐ Describe Using airlift attach to rig

Equipment decontaminated prior to development ☐ Yes ☐ No

Describe

EQUIPMENT NUMBERS

pH Meter YSI EC Meter YSI Turbidity Meter YSI Thermometer YSI

CASING VOLUME INFORMATION:

Casing ID (inch)	1.0	1.5	(2.0)	2.2	3.0	4.0	4.3	5.0	6.0	7.0	8.0
Unit Casing Volume (A) (gal/ft)	0.04	0.09	0.16	0.2	0.37	0.65	0.75	1.0	1.5	2.0	2.6

PURGING INFORMATION

Measured Well Depth B 121 ft.

Measured Water Level Depth (C) 45.98 ft.

Length of Static Water Column (D) 121 (B) - 45.98 (C) = 75.02 ft.

Casing Water Volume (E) 0.16 (A) x 75.02 (D) = 12 gal

Total Purge Volume = 400 gal

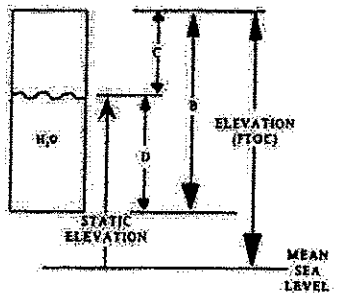

Date	Time	Water Level (FTOC)	Volume Removed (gal)	pH	EC	Temperature F or C	Turbidity/ Sand (ppm)	Comments
6-10-09	07:30	~46	0	7.83	0.816	21.48	112	grayish
6-10-09	08:30	NR	~100	7.71	0.824	22.01	23.1	clear
6-10-09	09:30	NR	~200	7.64	0.826	22.06	19.1	clear
6-10-09	10:30	NR	~330	7.69	0.851	22.04	7.2	clear
6-10-09	11:30	NR	~400	7.61	0.808	22.19	6.4	clear

00096596

GROUNDWATER SAMPLING FORM

Sheet 1 of 2

Operable Unit/Site ID: LHAAP-29
Project Name/#: LONGHORN AAP / 117591
Weather: cloudy Hi 80s

Sampling location ID: 29WW41
Sample ID: 29WW41-090610
Collection Time/Date: 13:30 06-10-09

Pump Installation

Pump installation crew: A. Willmore
PID/FID reading (well head/background): 0.1
Casing diameter (inches): 2"
Total well Depth (ft. BTOC): 120.67
Initial (pre-installation) DTW/time: 46.02
Final (after pump priming) DTW/time: NA
Free product (circle): LNAPL / DNAPL
Volume of water removed during priming (mL): NA
Discharge tube length (ft.): 113'

Installation date/beginning time: 6.10.09 12:41
Installation date/completion time: 6.10.09 12:44
Screen Interval (ft. BTOC): 102.5 to 117.5
Pump intake depth (ft BTOC): 110
Post-installation DTW/time: 45.98 12:47
Max. sustainable pump rate (mL/min): 200
Appearance of product: None
Discharge tube diameter (3/8" or 1/4"): 1/4
Inlet reducer used (Y/N): N

Pneumatic Controller Tuning:
Initial air pressure = H (ft.) X 0.43 = NA psi

	Initial	2	3	4	5	6	7	8	Final
Pressure (psi)									
Refill Setting									
Discharge Setting				NA					
Flow rate (mL/min)									

Purging

Purging/sampling crew: A. Willmore
Purge date/beginning time: 6.10.09 13:05
Initial (pre-purging) DTW (ft. BTOC): 46.
Calculated tubing + pump volume: NA

PID/FID reading (well head/background): 0.1
Purge date/completion time: 6.10.09 13:40
Final (post-purging) DTW (ft. BTOC): 46.14
No. of tubing + pump volumes purged: NA

Pneumatic Controller Tuning:
Initial air pressure = H (ft.) X 0.43 = NA psi

	Initial	2	3	4	5	6	7	8	Final
Pressure (psi)	80								80
Refill Setting	10								10
Discharge Setting	5								5
Flow rate (mL/min)	200								200

Water Quality Parameter Measurements

Time	DTW (ft. BTOC)	Purge Rate (mL/min)	Cumulative Volume Purged (L)	Temp. (degree C)	Electrical Conductivity (uMhos/cm)	pH	Eh (mv)	DO (mg/L)	Turbidity (NTU)
13:10	46.08	200	1	24.61	0.789	7.72	219.4	3.61	15.6
13:15	46.14	200	2	24.85	0.790	7.72	220.4	3.57	13.4
13:20	46.14	200	3	24.87	0.791	7.72	220.9	3.56	11.1
13:25	46.14	200	4	24.91	0.793	7.72	221.4	3.54	10.1

00096597

GROUNDWATER SAMPLING FORM

Sheet 2 of 2

29WW41

Water Quality Parameter Measurements (continued)

Time	DTW (ft. BTOC)	Purge Rate (mL/min)	Cumulative Volume Purged (L)	Temp. (degree C) ± 10%	±3% Electrical Conductivity (uMhos/cm)	pH ± 0.1	Eh (mv) ± 10	DO (mg/L) ± 10%	Turbidity (NTU) ± 10%

10/20

Sampling

Sampling beginning time: 13:30 Sampling completion time: 13:35

Water Quality Parameter Measurements

Time	DTW (ft. BTOC)	Purge Rate (mL/min)	Cumulative Volume Purged (L)	Temp. (degree C)	Electrical Conductivity (uMhos/cm)	pH	Eh (mv)	DO (mg/L)	Turbidity (NTU)
13:40	46.14	200	7	25.24	0.792	7.72	225.9	3.53	8.2

Sample Information

Sample ID: 29WW41-090610

Sample collection date/time: 6/10/09 13:30

Duplicate sample collected (Y/N): N

Duplicate sample ID: NA

Split sample collected (Y/N): N

Split sample ID: NA

COC No(s): NR

Requested Analysis	Method	Containers	Requested Analysis	Method	Containers
VOCs	8260	3 x 40 mL VOA vials			

Comments: Purged & Sampled w/ stainless steel cased bladder pump

Abbreviations: BTOC - Below top of casing; DTW - Depth to water; H - head above pump intake; mL - milliliter; L - Liter

00096598

WELL DEVELOPMENT RECORD

LHAAP-29

WELL/PIEZOMETER ID 114
SHEET 1 of 1

PROJECT NAME: Longhorn PROJECT NO.: 117591 DATE: 10/14/08

LOCATION: Karnack, Tx DATE INSTALLED: Redevelopment

TOTAL DEPTH (FTOC) 36.44 CASING DIAMETER 2"

METHODS OF DEVELOPMENT

☐ Swabbing ☑ Bailing ☐ Pumping ☐ Describe

Equipment decontaminated prior to development ☐ Yes ☐ NO

Describe 3-part rinse; potable water, alconox + H_2O, DI Water

EQUIPMENT NUMBERS:

pH Meter YSI 6280 EC Meter YSI 6280 Turbidity Meter YSI 6280 Thermometer YSI 6280

CASING VOLUME INFORMATION:

Casing ID (inch)	1.0	1.5	2.0	2.2	3.0	4.0	4.3	5.0	6.0	7.0	8.0
Unit Casing Volume (A) (gal/ft)	0.04	0.09	0.16	0.2	0.37	0.65	0.75	1.0	1.5	2.0	2.6

PURGING INFORMATION:

Measured Well Depth (B) 36.44 ft.

Measured Water Level Depth (C) 30.49 ft.

Length of Static Water Colume (D) 36.44 (B) - 30.49 (C) = 5.95 ft.

Casing Water Volume (E) = 0.65 (A) x 5.95 (D) = 3.87 gal ~~0.16~~ ~~0.952~~

Total Purge Volume = 20 (gal)

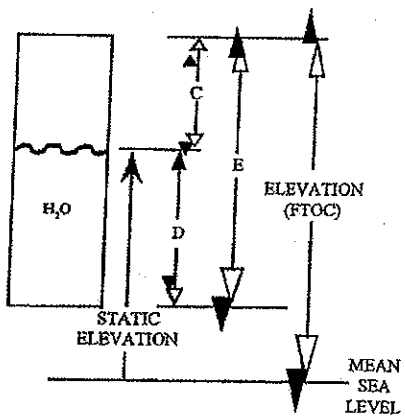

Date	Time	Water Level (FTOC)	Volume Removed (gal)	pH	EC	Temperature F or C	Turbidity/ Sand (ppm)	Comments
10/14/08	10:10	NR	5	6.57	2.612	19.03	50.1	
10/14/08	10:52	NR	10	6.53	2.634	19.61	39.4	
10/14/08	11:31	NR	15	6.53	6.634	19.62	14.2	
10/14/08	11:52	NR	20	6.56	6.141	20.01	6.8	

10/14/08

FIGURE 5

GROUNDWATER SAMPLING FORM

00096599
Sheet 1 of 2

Operable Unit/Site ID: LHAAP - 29
Project Name/#: Longhorn 117591.0006A100
Weather: clear, 70s
Sampling location ID: 114
Sample ID: MW114-102008
Collection Time/Date: 16:10 10-20-08

Pump Installation

Pump installation crew: A. Willmon / R. Wagner
PID/FID reading (well head/background): 0.0
Casing diameter (inches): 2"
Total well Depth (ft. BTOC): 36.44
Initial (pre-installation) DTW/time: 30.44
Final (after pump priming) DTW/time:
Free product (circle): LNAPL / DNAPL
Volume of water removed during priming (mL): NA
Discharge tube length (ft.): ~36'
Installation date/beginning time: 10-20-08 15:18
Installation date/completion time: 10-20-08 15:23
Screen Interval (ft. BTOC): 26 to 36
Pump intake depth (ft BTOC): ~33
Post-installation DTW/time: 29.89
Max. sustainable pump rate (mL/min): 100
Appearance of product: Non
Discharge tube diameter (3/8" or 1/4"): 1/4"
Inlet reducer used (Y/N): N

Pneumatic Controller Tuning:
Initial air pressure = H (ft.) X 0.43 = NR psi

	Initial	2	3	4	5	6	7	8	Final
Pressure (psi)	20								20
Refill Setting	10								10
Discharge Setting	5								5
Flow rate (mL/min)	100								100

Purging

Purging/sampling crew: A. Willmon / R. Wagner
Purge date/beginning time: 10-20-08 / 15:27
Initial (pre-purging) DTW (ft. BTOC): 29.51
Calculated tubing + pump volume: NA
PID/FID reading (well head/background): 0.0
Purge date/completion time: 10-20-08
Final (post-purging) DTW (ft. BTOC): 30.96
No. of tubing + pump volumes purged: NA

Pneumatic Controller Tuning:
Initial air pressure = H (ft.) X 0.43 = NR psi

	Initial	2	3	4	5	6	7	8	Final
Pressure (psi)	20								20
Refill Setting	10								10
Discharge Setting	5								5
Flow rate (mL/min)	100								100

Water Quality Parameter Measurements

Time	DTW (ft. BTOC)	Purge Rate (mL/min)	Cumulative Volume Purged (L)	Temp. (degree C)	Electrical Conductivity (uMhos/cm)	pH	Eh (mv)	DO (mg/L)	Turbidity (NTU)
15:38	30.96	100	0.5	20.27	2.643	6.57	89.7	~~8.8~~ NR	30.0
15:43	30.96	100	1.0	19.95	2.623	6.50	94.1	~~NR~~ 0.76	24.3
15:48	30.96	100	1.5	19.93	2.622	6.51	95.2	0.74	14.5
15:53	30.96	100	2.0	19.89	2.621	6.51	96.0	0.72	11.9
15:58	30.96	100	2.5	19.85	2.620	6.52	97.1	0.70	9.5
16:03	30.96	100	3.0	19.86	2.620	6.52	94.7	0.70	6.2

GROUNDWATER SAMPLING FORM

00096600

Sheet ___ of ___

114

Water Quality Parameter Measurements (continued)

Time	DTW (ft. BTOC)	Purge Rate (mL/min)	Cumulative Volume Purged (L)	Temp. (degree C) ±10%	Electrical Conductivity (uMhos/cm) ±3%	pH ±0.1	Eh (mv) ±10	DO (mg/L) ±10%	Turbidity (NTU) ±10%

10/20/08

10-<
20

Sampling

Sampling beginning time: 16:10 Sampling completion time: 16:15

Water Quality Parameter Measurements

Time	DTW (ft. BTOC)	Purge Rate (mL/min)	Cumulative Volume Purged (L)	Temp. (degree C)	Electrical Conductivity (uMhos/cm)	pH	Eh (mv)	DO (mg/L)	Turbidity (NTU)
16:23	30.90	100	5.0	19.84	2.619	6.51	97.5	0.70	5.1

Sample Information

Sample ID: MW114-102008

Sample collection date/time: 10-20-08 16:10

Duplicate sample collected (Y/N): N

Duplicate sample ID: NA

Split sample collected (Y/N): N

Split sample ID: NA

COC No(s): ___

Requested Analysis	Method	Containers	Requested Analysis	Method	Containers
TAL METAL		500 mL HDPE			

Comments: Purged and sampled w/ bladder pump.

Abbreviations: BTOC - Below top of casing; DTW - Depth to water; H - head above pump intake; mL - milliliter; L - Liter

00096601

LHAAP-29

WELL DEVELOPMENT RECORD

WELL/PIEZOMETER ID 115
SHEET 1 of 1

PROJECT NAME: Longhorn PROJECT NO.: 117591 DATE: 10/7/08

LOCATION: Karnack, Tx DATE INSTALLED: Redevelopment

TOTAL DEPTH (FTOC) 32.5 CASING DIAMETER 2"

METHODS OF DEVELOPMENT

☐ Swabbing ☐ Bailing ☐ Pumping ☐ Describe

Equipment decontaminated prior to development ☐ Yes ☐ NO

Describe 3-part rinse; potable water, alconox + H_2O, DI water

EQUIPMENT NUMBERS:

pH Meter YSI 6280 EC Meter YSI 6280 Turbidity Meter YSI 6280 Thermometer YSI 6280

CASING VOLUME INFORMATION:

Casing ID (inch)	1.0	1.5	2.0	2.2	3.0	4.0	4.3	5.0	6.0	7.0	8.0
Unit Casing Volume (A) (gal/ft)	0.04	0.09	0.16	0.2	0.37	0.65	0.75	1.0	1.5	2.0	2.6

PURGING INFORMATION:

Measured Well Depth (B) _____ ft.

Measured Water Level Depth (C) _____ ft.

Length of Static Water Column (D) _____ (B) - _____ (C) = _____ ft.

Casing Water Volume (E) = 0.65 (A) x _____ (D) = _____ gal

Total Purge Volume = _____ (gal)

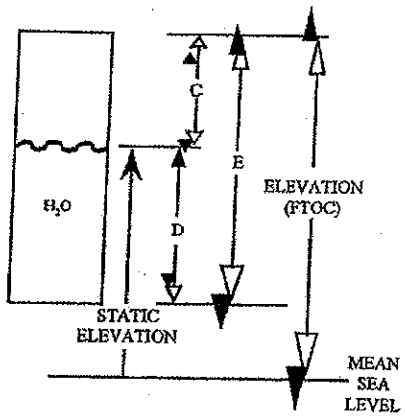

Date	Time	Water Level (FTOC)	Volume Removed (gal)	pH	EC	Temperature F or C	Turbidity/ Sand (ppm)	Comments

FIGURE 5

115
00096602
Sheet 1 of 2

GROUNDWATER SAMPLING FORM

LHAAP-29

Operable Unit/Site ID: DRY
Project Name/#:
Weather:
Sampling location ID: 115
Sample ID:
Collection Time/Date: 10/21/08

Pump Installation

Pump installation crew:
PID/FID reading (well head/background):
Casing diameter (inches):
Total well Depth (ft. BTOC):
Initial (pre-installation) DTW/time:
Final (after pump priming) DTW/time:
Free product (circle): LNAPL / DNAPL
Volume of water removed during priming (mL):
Discharge tube length (ft.):
Installation date/beginning time:
Installation date/completion time:
Screen Interval (ft. BTOC): to
Pump intake depth (ft BTOC):
Post-installation DTW/time:
Max. sustainable pump rate (mL/min):
Appearance of product:
Discharge tube diameter (3/8" or 1/4"):
Inlet reducer used (Y/N):

Pneumatic Controller Tuning:
Initial air pressure = H (ft.) X 0.43 = _____ psi

	Initial	2	3	4	5	6	7	8	Final
Pressure (psi)									
Refill Setting			DRY						
Discharge Setting									
Flow rate (mL/min)									

Purging

Purging/sampling crew:
Purge date/beginning time:
Initial (pre-purging) DTW (ft. BTOC):
Calculated tubing + pump volume: NA
PID/FID reading (well head/background):
Purge date/completion time:
Final (post-purging) DTW (ft. BTOC):
No. of tubing + pump volumes purged:

Pneumatic Controller Tuning:
Initial air pressure = H (ft.) X 0.43 = _____ psi

	Initial	2	3	4	5	6	7	8	Final
Pressure (psi)									
Refill Setting				DRY					
Discharge Setting									
Flow rate (mL/min)									

Water Quality Parameter Measurements

Time	DTW (ft. BTOC)	Purge Rate (mL/min)	Cumulative Volume Purged (L)	Temp. (degree C)	Electrical Conductivity (uMhos/cm)	pH	Eh (mv)	DO (mg/L)	Turbidity (NTU)
					DRY				

GROUNDWATER SAMPLING FORM

115
00096603
Sheet 2 of

LHAAP-29

Water Quality Parameter Measurements (continued)

Time	DTW (ft. BTOC)	Purge Rate (mL/min)	Cumulative Volume Purged (L)	Temp. (degree C) ±10%	Electrical Conductivity (uMhos/cm) ±3%	pH ±0.1	Eh (mv) ±10	DO (mg/L) ±10%	Turbidity (NTU) ±10%

DRY

10-<
20

Sampling

Sampling beginning time:_____ Sampling completion time:_____

Water Quality Parameter Measurements

Time	DTW (ft. BTOC)	Purge Rate (mL/min)	Cumulative Volume Purged (L)	Temp. (degree C)	Electrical Conductivity (uMhos/cm)	pH	Eh (mv)	DO (mg/L)	Turbidity (NTU)

DRY

Sample Information

Sample ID:_____ Sample collection date/time:_____

Duplicate sample collected (Y/N):_____ Duplicate sample ID:_____

Split sample collected (Y/N):_____ Split sample ID:_____

COC No(s):_____

Requested Analysis	Method	Containers	Requested Analysis	Method	Containers

DRY

Comments:

DRY

Abbreviations: BTOC - Below top of casing; DTW - Depth to water; H - head above pump intake; mL - milliliter; L - Liter

00096604

WELL DEVELOPMENT RECORD LHAAP-29

WELL/PIEZOMETER ID 116
SHEET 1 of 1

PROJECT NAME: Longhorn PROJECT NO.: 117591 DATE: 10/16/08
LOCATION: Karnack, Tx DATE INSTALLED: Redevelopment
TOTAL DEPTH (FTOC) 40.04 CASING DIAMETER 4" 2"

METHODS OF DEVELOPMENT

☐ Swabbing ☐ Bailing ☐ Pumping ☐ Describe
Equipment decontaminated prior to development ☐ Yes ☐ NO
Describe 3-part rinse; potable water, alconox + H2O, DI Water

EQUIPMENT NUMBERS:
pH Meter YSI 6280 EC Meter YSI 6280 Turbidity Meter YSI 6280 Thermometer YSI 6280

CASING VOLUME INFORMATION:

Casing ID (inch)	1.0	1.5	2.0	2.2	3.0	4.0	4.3	5.0	6.0	7.0	8.0
Unit Casing Volume (A) (gal/ft)	0.04	0.09	0.16	0.2	0.37	0.65	0.75	1.0	1.5	2.0	2.6

PURGING INFORMATION:

Measured Well Depth (B) 40.04 ft.
Measured Water Level Depth (C) 29.01 ft.
Length of Static Water Column (D) 40.04 (B) - 29.01 (C) = 11.03 ft.
0.16 x 11.03 = 1.76 gal
Casing Water Volume (E) = 0.65 (A) x 11.03 (D) = 7.17 gal

Total Purge Volume = 36 (gal)

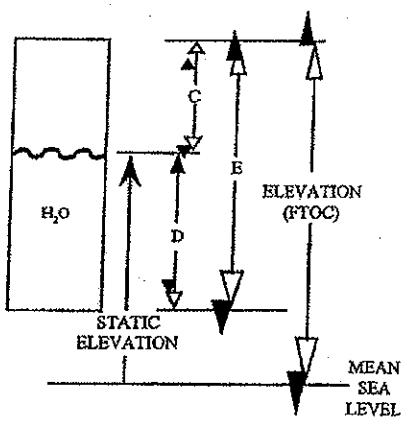

switch

Date	Time	Water Level (FTOC)	Volume Removed (gal)	pH	EC	Temperature F or C	Turbidity/ Sand (ppm)	Comments
14:02	10/16/08	NR	12	6.41	5.780	18.71	6.3	clear
14:31	10/16/08	NR	24	6.41	5.780	18.62	6.1	clear
15:28	10/16/08	NR	36	6.42	5.781	18.42	4.9	clear

10/16/08

FIGURE 5

GROUNDWATER SAMPLING FORM

00096605
Sheet 1 of 2

Operable Unit/Site ID: LHAAP-29 | Sampling location ID: MW116
Project Name/#: Longhorn / 117591.0006A100 | Sample ID: MW116-102108
Weather: clear, 70s | Collection Time/Date: 11:05 10/21/08

Pump Installation

Pump installation crew: A. Willmore / R. Wagner
PID/FID reading (well head/background): 0.0
Casing diameter (inches): 2"
Total well Depth (ft. BTOC): 40.04
Initial (pre-installation) DTW/time: 29.05
Final (after pump priming) DTW/time:
Free product (circle): LNAPL / DNAPL
Volume of water removed during priming (mL): NA
Discharge tube length (ft.): 39

Installation date/beginning time: 10/21/08 ~~09:20~~ 10:20
Installation date/completion time: 10/21/08 ~~09:24~~ 10:24
Screen Interval (ft. BTOC): 30 to 40
Pump intake depth (ft BTOC): 35'
Post-installation DTW/time: 28.47
Max. sustainable pump rate (mL/min): 100
Appearance of product: None
Discharge tube diameter (3/8" or 1/4"): 1/4"
Inlet reducer used (Y/N): N

Pneumatic Controller Tuning:
Initial air pressure = H (ft.) X 0.43 = NR psi

	Initial	2	3	4	5	6	7	8	Final
Pressure (psi)									
Refill Setting									
Discharge Setting									
Flow rate (mL/min)							10/21/08		

Purging

Purging/sampling crew: A Willmore / R. Wagner
Purge date/beginning time: 10/21/08 10:34
Initial (pre-purging) DTW (ft. BTOC): ~~NR~~ 28.47
Calculated tubing + pump volume: NA

PID/FID reading (well head/background): 0.0
Purge date/completion time: 10/21/08 11:24
Final (post-purging) DTW (ft. BTOC): NA
No. of tubing + pump volumes purged: NP

Pneumatic Controller Tuning:
Initial air pressure = H (ft.) X 0.43 = NR psi

	Initial	2	3	4	5	6	7	8	Final
Pressure (psi)	20	16							20
Refill Setting	10	10							10
Discharge Setting	5	5							5
Flow rate (mL/min)	~~150~~ 150	160							100

Water Quality Parameter Measurements

Time	DTW (ft. BTOC)	Purge Rate (mL/min)	Cumulative Volume Purged (L)	Temp. (degree C)	Electrical Conductivity (uMhos/cm)	pH	Eh (mv)	DO (mg/L)	Turbidity (NTU)
10:39	NR	150	0.75	17.96	5.612	6.42	60.4	1.91	6.9
10:44	30.46	100	1.25	17.91	5.778	6.42	70.6	1.81	6.4
10:49	~~30~~ 31.00	100	1.75	18.02	5.783	6.42	63.2	1.68	7.0
10:54	31.00	100	2.25	18.04	5.781	6.42	61.3	1.73	5.1
10:59	31.00	100	2.75	18.04	5.781	6.42	61.0	1.72	4.9

GROUNDWATER SAMPLING FORM

00096606

Sheet 2 of 2

116

Water Quality Parameter Measurements (continued)

Time	DTW (ft. BTOC)	Purge Rate (mL/min)	Cumulative Volume Purged (L)	Temp. (degree C) ±10%	Electrical Conductivity (uMhos/cm) ±3%	pH ±0.1	Eh (mv) ±10	DO (mg/L) ±10%	Turbidity (NTU) ±10%

10/21/08

10-20

Sampling

Sampling beginning time: 11:05

Sampling completion time: 11:20

Water Quality Parameter Measurements

Time	DTW (ft. BTOC)	Purge Rate (mL/min)	Cumulative Volume Purged (L)	Temp. (degree C)	Electrical Conductivity (uMhos/cm)	pH	Eh (mv)	DO (mg/L)	Turbidity (NTU)
11:24	31.00	100	5.25	~~100~~ 18.12	5.777	6.42	55.9	1.67	6.8

Sample Information

Sample ID: MW116-102108

Sample collection date/time:

Duplicate sample collected (Y/N): Y

Duplicate sample ID: ~~[illegible]~~ MW116-102108-QA

Split sample collected (Y/N): N

Split sample ID: NA

COC No(s):

Requested Analysis	Method	Containers	Requested Analysis	Method	Containers
TAL - METALS					

Comments: No filter

Used bladder pump to purge & sample

Abbreviations: BTOC - Below top of casing; DTW - Depth to water; H - head above pump intake; mL - milliliter; L - Liter

00096607

WELL DEVELOPMENT RECORD

LHAAP-29

WELL/PIEZOMETER ID 118

SHEET 1 of 1

PROJECT NAME: Longhorn PROJECT NO.: 117591 DATE: 10/16/08

LOCATION: Karnack, Tx DATE INSTALLED: Redevelopment

TOTAL DEPTH (FTOC) 36.10 CASING DIAMETER 2"

METHODS OF DEVELOPMENT

☐ Swabbing ☑ Bailing ☐ Pumping ☐ Describe

Equipment decontaminated prior to development ☐ Yes ☐ NO

Describe 3-part rinse; potable water, alconox + H_2O, DI water

EQUIPMENT NUMBERS:

pH Meter YSI 6280 EC Meter YSI 6280 Turbidity Meter YSI 6280 Thermometer YSI 6280

CASING VOLUME INFORMATION:

Casing ID (inch)	1.0	1.5	2.0	2.2	3.0	4.0	4.3	5.0	6.0	7.0	8.0
Unit Casing Volume (A) (gal/ft)	0.04	0.09	0.16	0.2	0.37	0.65	0.75	1.0	1.5	2.0	2.6

PURGING INFORMATION:

Measured Well Depth (B) 36.10 ft.

Measured Water Level Depth (C) 29.29 ft.

Length of Static Water Column (D) 36.10 (B) - 29.29 (C) = 6.81 ft.

0.16 x 6.81 = 1.0896

Casing Water Volume (E) = 0.65 (A) x 6.81 (D) = 4.43 gal

Total Purge Volume = 24 (gal)

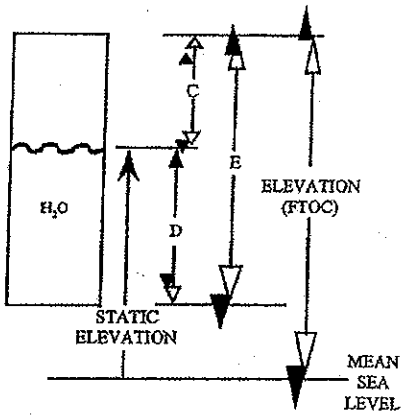

Date	Time	Water Level (FTOC)	Volume Removed (gal)	pH	EC	Temperature F or C	Turbidity/ Sand (ppm)	Comments
10/16	10:01	NR	8	6.65	4.173	18.31	0.0	clear
10/16	10:33	NR	16	6.64	4.172	18.32	0.0	clear
10/16	10:50	NR	24	6.71	4.180	18.41	0.0	clear

10/16/08

FIGURE 5

GROUNDWATER SAMPLING FORM

00096608
Sheet 1 of 2

Operable Unit/Site ID: LHAAP-29
Project Name/#: Longhorn
Weather: clear; 80s
Sampling location ID: B8
Sample ID: B8 ~ 102008
Collection Time/Date: 15:15 10/20/08

Pump Installation

Pump installation crew: A. Willmore / R. Wagner
PID/FID reading (well head/background): 0.0
Casing diameter (inches): 2"
Total well Depth (ft. BTOC): ~~30.29~~ 36.10
Initial (pre-installation) DTW/time: ~~30~~ ~~29.29~~ ~~29~~ 29.29
Final (after pump priming) DTW/time:
Free product (circle): LNAPL / DNAPL
Volume of water removed during priming (mL): NA
Discharge tube length (ft.): ~35'
Installation date/beginning time: 10/20/08
Installation date/completion time: 10/20/08
Screen Interval (ft. BTOC): 26 to 36
Pump intake depth (ft BTOC): ~32'
Post-installation DTW/time: 29.32
Max. sustainable pump rate (mL/min): 100
Appearance of product: N
Discharge tube diameter (3/8" or 1/4"): 1/4"
Inlet reducer used (Y/N): N

Pneumatic Controller Tuning:
Initial air pressure = H (ft.) X 0.43 = NR psi

	Initial	2	3	4	5	6	7	8	Final
Pressure (psi)	25								25
Refill Setting	10								10
Discharge Setting	5								5
Flow rate (mL/min)	100								100

Purging

Purging/sampling crew: A. Willmore / R. Wagner
Purge date/beginning time: 10/20/08 14:16
Initial (pre-purging) DTW (ft. BTOC): 29.32
Calculated tubing + pump volume: NA
PID/FID reading (well head/background): 0.0
Purge date/completion time: 10/20/08
Final (post-purging) DTW (ft. BTOC):
No. of tubing + pump volumes purged: NA

Pneumatic Controller Tuning:
Initial air pressure = H (ft.) X 0.43 = NR psi

	Initial	2	3	4	5	6	7	8	Final
Pressure (psi)	25								25
Refill Setting	10								10
Discharge Setting	5								5
Flow rate (mL/min)	100								100

Water Quality Parameter Measurements

Time	DTW (ft. BTOC)	Purge Rate (mL/min)	Cumulative Volume Purged (L)	Temp. (degree C)	Electrical Conductivity (uMhos/cm)	pH	Eh (mv)	DO (mg/L)	Turbidity (NTU)
14:30	30.53	100	0.5	20.45	3.741	6.73	53.2	2.66	0.0
14:30	30.53	100	1.5	19.94	4.074	6.66	68.8	1.36	0.0
14:48	30.53	100	2.5	20.53	4.174	6.66	72.4	2.46	0.0
14:50	30.53	100	3.5	20.54	4.176	6.66	72.3	2.43	0.0

GROUNDWATER SAMPLING FORM

118
00096609
Sheet 2 of 2

Water Quality Parameter Measurements (continued)

Time	DTW (ft. BTOC)	Purge Rate (mL/min)	Cumulative Volume Purged (L)	Temp. (degree C) ±10%	Electrical Conductivity (uMhos/cm) ±3%	pH ±0.1	Eh (mv) ±10	DO (mg/L) ±10%	Turbidity (NTU) ±10%

10/20/08

10-6 / 20

Sampling

Sampling beginning time: _____ Sampling completion time: _____

Water Quality Parameter Measurements

Time	DTW (ft. BTOC)	Purge Rate (mL/min)	Cumulative Volume Purged (L)	Temp. (degree C)	Electrical Conductivity (uMhos/cm)	pH	Eh (mv)	DO (mg/L)	Turbidity (NTU)
15:15	30.53	100	6.0	20.56	4.177	6.66	71.1	2.45	0.0

Sample Information

Sample ID: 118-102008
Duplicate sample collected (Y/N): N
Split sample collected (Y/N): N
COC No(s): _____

Sample collection date/time: 10-20-08 15:15
Duplicate sample ID: NA
Split sample ID: NA

Requested Analysis	Method	Containers	Requested Analysis	Method	Containers
TAL Metals		1-500 mL HDPE			

Comments: Sampled with bladder pump.
No filter used

Abbreviations: BTOC - Below top of casing; DTW - Depth to water; H - head above pump intake; mL - milliliter; L - Liter

00096610

WELL DEVELOPMENT RECORD

WELL/PIEZOMETER ID 29WW01
SHEET 1 of 1

PROJECT NAME: Longhorn PROJECT NO.: 117591 DATE: 10/17/08
LOCATION: Karnack, Tx DATE INSTALLED: Redevelopment
TOTAL DEPTH (FTOC) 34.69 CASING DIAMETER 4"

METHODS OF DEVELOPMENT

☐ Swabbing ☑ Bailing ☐ Pumping ☐ Describe
Equipment decontaminated prior to development ☐ Yes ☐ NO
Describe 3-part rinse; potable water, alconox + H_2O, DI water

EQUIPMENT NUMBERS:
pH Meter YSI 6280 EC Meter YSI 6280 Turbidity Meter YSI 6280 Thermometer YSI 6280

CASING VOLUME INFORMATION:

Casing ID (inch)	1.0	1.5	2.0	2.2	3.0	4.0	4.3	5.0	6.0	7.0	8.0
Unit Casing Volume (A) (gal/ft)	0.04	0.09	0.16	0.2	0.37	0.65	0.75	1.0	1.5	2.0	2.6

PURGING INFORMATION:

Measured Well Depth (B) 34.69 ft.
Measured Water Level Depth (C) 29.28 ft.
Length of Static Water Column (D) 34.69 (B) - 29.28 (C) = 5.41 ft.
Casing Water Volume (E) = 0.65 (A) x 5.41 (D) = 3.52 gal
Total Purge Volume = 8 (gal)

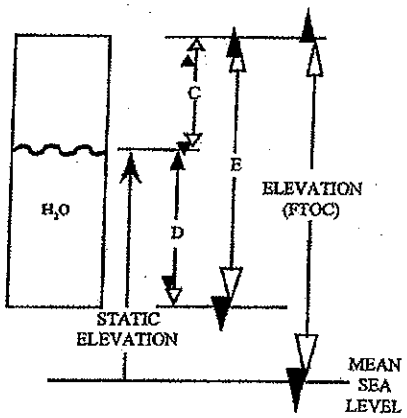

Date	Time	Water Level (FTOC)	Volume Removed (gal)	pH	EC	Temperature F or C	Turbidity/ Sand (ppm)	Comments
10/17/08	07:00	NR	3	6.71	2.714	16.43	51.3	cloudy
10/17/08	07:15	NR	6	6.71	2.719	16.41	48.3	cloudy
			Bailed dry @ 8 gallons					

10/17/08

FIGURE 5

GROUNDWATER SAMPLING FORM

00096611
Sheet 1 of 2

Operable Unit/Site ID: LHAAP-29
Project Name/#: Longhorn / 117591.0006A100
Weather: cloudy, 60s

Sampling location ID: 29MW01
Sample ID: 29MW01-102308
Collection Time/Date: 13:20 10-23-08

Pump Installation

Pump installation crew: A. Willmore / R. Wagner
PID/FID reading (well head/background): 0.0
Casing diameter (inches): 4"
Total well Depth (ft. BTOC): 34.69
Initial (pre-installation) DTW/time: 29.28
Final (after pump priming) DTW/time:
Free product (circle): LNAPL / DNAPL
Volume of water removed during priming (mL): NA
Discharge tube length (ft.): 35

Installation date/beginning time: 10/23/08 12:24
Installation date/completion time: 10/23/08 12:26
Screen Interval (ft. BTOC): ~24.5 to ~34.5
Pump intake depth (ft BTOC): 32
Post-installation DTW/time: 29.28
Max. sustainable pump rate (mL/min): 100
Appearance of product: None
Discharge tube diameter (3/8" or 1/4"): 1/4
Inlet reducer used (Y/N): N

Pneumatic Controller Tuning:
Initial air pressure = H (ft.) X 0.43 = NR psi

	Initial	2	3	4	5	6	7	8	Final
Pressure (psi)									
Refill Setting	NA								NA
Discharge Setting									
Flow rate (mL/min)	100								100

Purging

Purging/sampling crew: A. Willmore / R. Wagner
Purge date/beginning time: 10-23-08 12:31
Initial (pre-purging) DTW (ft. BTOC): 29.28
Calculated tubing + pump volume: NA

PID/FID reading (well head/background): 0.0
Purge date/completion time: 10-23-08
Final (post-purging) DTW (ft. BTOC): 30.11
No. of tubing + pump volumes purged: NA

Pneumatic Controller Tuning:
Initial air pressure = H (ft.) X 0.43 = NR psi

	Initial	2	3	4	5	6	7	8	Final
Pressure (psi)									
Refill Setting	NA								NA
Discharge Setting									
Flow rate (mL/min)	100								100

Water Quality Parameter Measurements

ORP

Time	DTW (ft. BTOC)	Purge Rate (mL/min)	Cumulative Volume Purged (L)	Temp. (degree C)	Electrical Conductivity (uMhos/cm)	pH	Eh (mv)	DO (mg/L)	Turbidity (NTU)
~~12:36~~ R 12:36	30.11	100	0.5	17.50	2.666	6.70	103.1	6.30	44.7
12:41	30.11	100	1	17.61	2.700	6.72	100.1	5.92	
12:46	30.11	100	1.5	17.75	2.706	6.72	100.3	5.10	NR
12:51	30.11	100	2	17.83	2.711	6.71	99.9	5.14	54.8
12:56	30.11	100	2.5	17.88	2.715	6.72	99.9	5.59	38.4
13:01	30.11	100	3.0	17.96	2.724	6.71	99.8	3.67	26.2
13:06	30.11	100	3.5	18.00	2.740	6.69	100.2	3.46	17.1
13:11	30.11	100	4.0	18.00	2.743	6.70	100.0	3.28	13.6

GROUNDWATER SAMPLING FORM

00096612

Sheet 2 of 2

29WW01

Water Quality Parameter Measurements (continued)

Time	DTW (ft. BTOC)	Purge Rate (mL/min)	Cumulative Volume Purged (L)	Temp. (degree C) ±10%	Electrical Conductivity (uMhos/cm) ±3%	pH ±0.1	Eh (mv) ±10	DO (mg/L) ±10%	Turbidity (NTU) ±10%
13:16	30.11	100	4.5	17.96	2.743	6.70	100.3	4.11	10.5

10/23/08

10-20

Sampling

Sampling beginning time: 13:20 Sampling completion time: 13:35

Water Quality Parameter Measurements

Time	DTW (ft. BTOC)	Purge Rate (mL/min)	Cumulative Volume Purged (L)	Temp. (degree C)	Electrical Conductivity (uMhos/cm)	pH	Eh (mv)	DO (mg/L)	Turbidity (NTU)
13:41	30.11	100	7.0	17.95	2.743	6.70	100.7	4.12	7.8

Sample Information

Sample ID: 29WW01-102308 Sample collection date/time: 10/23/08 / 13:20

Duplicate sample collected (Y/N): Y - MS/MSD Duplicate sample ID: 29WW01-102308-MS/MSD

Split sample collected (Y/N): N Split sample ID:

COC No(s):

Requested Analysis	Method	Containers	Requested Analysis	Method	Containers
TAL Metals		3-500 mL HDPE			

Comments: Took MS/MSD NO FILTER USED

Sample + Purged w/ Peristaltic pump

Abbreviations: BTOC - Below top of casing; DTW - Depth to water; H - head above pump intake; mL - milliliter; L - Liter

00096613

WELL DEVELOPMENT RECORD

WELL/PIEZOMETER ID 29MW02
SHEET 1 of 1

PROJECT NAME: Longhorn PROJECT NO.: 117591 DATE: 10/17/08
LOCATION: Karnack, Tx DATE INSTALLED: Redevelopment
TOTAL DEPTH (FTOC) 42.68 CASING DIAMETER 4"

METHODS OF DEVELOPMENT

☐ Swabbing ☑ Bailing ☐ Pumping ☐ Describe

Equipment decontaminated prior to development ☐ Yes ☐ NO

Describe 3-part rinse; potable water, alconox + H_2O, DI water

EQUIPMENT NUMBERS:

pH Meter YSI 6280 EC Meter YSI 6280 Turbidity Meter YSI 6280 Thermometer YSI 6280

CASING VOLUME INFORMATION:

Casing ID (inch)	1.0	1.5	2.0	2.2	3.0	4.0	4.3	5.0	6.0	7.0	8.0
Unit Casing Volume (A) (gal/ft)	0.04	0.09	0.16	0.2	0.37	0.65	0.75	1.0	1.5	2.0	2.6

PURGING INFORMATION:

Measured Well Depth (B) 42.68 ft.

Measured Water Level Depth (C) 36.75 ft.

Length of Static Water Column (D) 42.68 (B) - 36.75 (C) = 5.93 ft.

Casing Water Volume (E) = 0.65 (A) x 5.93 (D) = 3.85 gal

Total Purge Volume = 9 (gal)

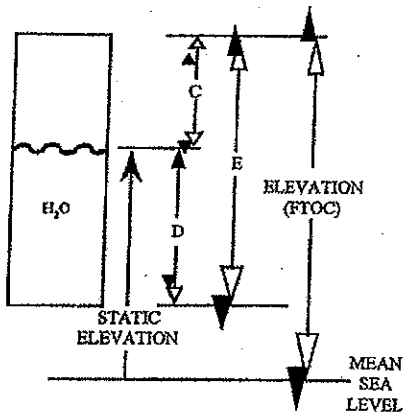

Date	Time	Water Level (FTOC)	Volume Removed (gal)	pH	EC	Temperature F or C	Turbidity/ Sand (ppm)	Comments
10/17/08	18:51	NR	3	6.46	4.481	16.91	5.5	clear
10/17/08	18:59	NR	6	6.42	4.483	16.93	4.3	clear
10/17/08	19:15	NR	9	6.44	4.481	16.90	9.1	clear
			DRY @ 9 gallons					
								10/17/08

FIGURE 5

GROUNDWATER SAMPLING FORM

00096614
Sheet 1 of 2

29WW02

Operable Unit/Site ID: LHAAP-29
Project Name/#: Longhorn / 117591.0006A100
Weather: ~~clear~~ 70s pdly cloudy
Sampling location ID: 29WW02
Sample ID: 29WW02-102308
Collection Time/Date: 15:30 10.23.08

Pump Installation

Pump installation crew: A. Willmore / R. Wagner
PID/FID reading (well head/background): 0.0
Casing diameter (inches): 4"
Total well Depth (ft. BTOC): 42.68
Initial (pre-installation) DTW/time: 36.73
Final (after pump priming) DTW/time: NA
Free product (circle): LNAPL / DNAPL
Volume of water removed during priming (mL): NA
Discharge tube length (ft.): 43'
Pneumatic Controller Tuning:
Initial air pressure = H (ft.) X 0.43 = NR psi

Installation date/beginning time: 10.23.08 15:11
Installation date/completion time: 10.23.08 15:13
Screen Interval (ft. BTOC): 32.5 to 42.5
Pump intake depth (ft BTOC): ~40
Post-installation DTW/time: 36.77 15:13
Max. sustainable pump rate (mL/min): 100
Appearance of product: None
Discharge tube diameter (3/8" or 1/4"): 1/4"
Inlet reducer used (Y/N): N

	Initial	2	3	4	5	6	7	8	Final
Pressure (psi)									
Refill Setting									
Discharge Setting									
Flow rate (mL/min)									

NA

Purging

Purging/sampling crew: R. Wagner / A. Willmore
Purge date/beginning time: 10.23.08 15:21
Initial (pre-purging) DTW (ft. BTOC): 36.77
Calculated tubing + pump volume: NA
Pneumatic Controller Tuning:
Initial air pressure = H (ft.) X 0.43 = NR psi

PID/FID reading (well head/background): 0.0
Purge date/completion time: 10.23.08
Final (post-purging) DTW (ft. BTOC): 36.96
No. of tubing + pump volumes purged: NA

	Initial	2	3	4	5	6	7	8	Final
Pressure (psi)	22								22
Refill Setting	10								10
Discharge Setting	5								5
Flow rate (mL/min)	100								100

Water Quality Parameter Measurements

Time	DTW (ft. BTOC)	Purge Rate (mL/min)	Cumulative Volume Purged (L)	Temp. (degree C)	Electrical Conductivity (uMhos/cm)	pH	Eh (mv)	DO (mg/L)	Turbidity (NTU)
15:26	36.96	100	0.5	19.17	4.470	6.46	61.5	8.23	7.4
15:31	36.96	100	1.0	19.17	4.484	6.45	62.2	5.91	6.7
15:36	36.96	100	1.5	19.44	4.485	6.45	64.0	5.90	6.5
15:41	36.96	100	2.0	19.43	4.485	6.45	63.8	5.86	6.7

GROUNDWATER SAMPLING FORM

00096615

Sheet 2 of 2

29WW02

Water Quality Parameter Measurements (continued)

Time	DTW (ft. BTOC)	Purge Rate (mL/min)	Cumulative Volume Purged (L)	Temp. (degree C) ±10%	Electrical Conductivity (uMhos/cm) ±3%	pH ±0.1	Eh (mv) ±10	DO (mg/L) ±10%	Turbidity (NTU) ±10%

10 / 20

Sampling

Sampling beginning time: 15:50

Sampling completion time: ~~15:50~~ 16:00 A2 16:40

Water Quality Parameter Measurements

Time	DTW (ft. BTOC)	Purge Rate (mL/min)	Cumulative Volume Purged (L)	Temp. (degree C)	Electrical Conductivity (uMhos/cm)	pH	Eh (mv)	DO (mg/L)	Turbidity (NTU)
15:006	96.96	100	4.5	19.43	4,484	6.45	63.7	5.91	6.5

Sample Information

Sample ID: 29WW02-102308

Sample collection date/time: 10.20.08 15:50

Duplicate sample collected (Y/N): N

Duplicate sample ID: NA

Split sample collected (Y/N): N

Split sample ID: NA

COC No(s):

Requested Analysis	Method	Containers	Requested Analysis	Method	Containers
TAL Metals		1-500 mL HDPE			

Comments: Sampled & Purged w/ bladder pump

Abbreviations: BTOC - Below top of casing; DTW - Depth to water; H - head above pump intake; mL - milliliter; L - Liter

00096616

WELL DEVELOPMENT RECORD

WELL/PIEZOMETER ID 29WW03
SHEET 1 of 1

PROJECT NAME: Longhorn PROJECT NO.: 117591 DATE: 10/15/08
LOCATION: Karnack, Tx DATE INSTALLED: Redevelopment
TOTAL DEPTH (FTOC) 29.90 CASING DIAMETER 4"

METHODS OF DEVELOPMENT

☐ Swabbing ☑ Bailing ☐ Pumping ☐ Describe

Equipment decontaminated prior to development ☐ Yes ☐ NO
Describe 3-part rinse; potable water, alconox + H_2O, DI Water

EQUIPMENT NUMBERS:
pH Meter YSI 6280 EC Meter YSI 6280 Turbidity Meter YSI 6280 Thermometer YSI 6280

CASING VOLUME INFORMATION:

Casing ID (inch)	1.0	1.5	2.0	2.2	3.0	4.0	4.3	5.0	6.0	7.0	8.0
Unit Casing Volume (A) (gal/ft)	0.04	0.09	0.16	0.2	0.37	0.65	0.75	1.0	1.5	2.0	2.6

PURGING INFORMATION:

Measured Well Depth (B) 29.90 ft.
Measured Water Level Depth (C) 28.41 ft.
Length of Static Water Column (D) 29.90 (B) - 28.41 (C) = 1.49 ft.
Casing Water Volume (E) = 0.65 (A) x 1.49 (D) = 0.97 gal
Total Purge Volume = 1 (gal)

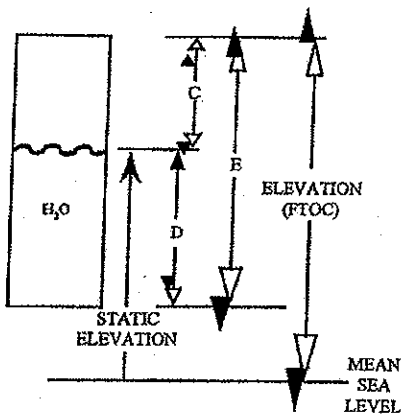

Date	Time	Water Level (FTOC)	Volume Removed (gal)	pH	EC	Temperature F or C	Turbidity/ Sand (ppm)	Comments
10/15/08	0805	NR	1			BAILED DRY; No recordings		

10/15/08

FIGURE 5

GROUNDWATER SAMPLING FORM

00096617

Sheet 1 of 3

29WW03

Operable Unit/Site ID: LHAAP-29
Project Name/#: Longhorn 117591
Weather: clear, 70's

Sampling location ID: 29WW03
Sample ID: ~~29WW03-102508~~ 29WW03-102508
Collection Time/Date: NA

Pump Installation

Pump installation crew: R. Wagner / A. Willmon
PID/FID reading (well head/background): 0.0
Casing diameter (inches): 4"
Total well Depth (ft. BTOC): 29.90
Initial (pre-installation) DTW/time: 28.45
Final (after pump priming) DTW/time: NA
Free product (circle): LNAPL / DNAPL
Volume of water removed during priming (mL): NA
Discharge tube length (ft.): NA

Installation date/beginning time: NA
Installation date/completion time: NA
Screen Interval (ft. BTOC): 19.5 to 29.5
Pump intake depth (ft BTOC): NA
Post-installation DTW/time: NA
Max. sustainable pump rate (mL/min): NA
Appearance of product: None
Discharge tube diameter (3/8" or 1/4"): 1/4"
Inlet reducer used (Y/N): N

Pneumatic Controller Tuning:
Initial air pressure = H (ft.) X 0.43 = NA psi

	Initial	2	3	4	5	6	7	8	Final
Pressure (psi)									
Refill Setting			BAILED						
Discharge Setting									
Flow rate (mL/min)									

Purging

Purging/sampling crew: R. Wagner / A. Willmon
Purge date/beginning time: 10-25-08 10:40
Initial (pre-purging) DTW (ft. BTOC): 28.45
Calculated tubing + pump volume: NA

PID/FID reading (well head/background): 0.0
Purge date/completion time: 10-25-08
Final (post-purging) DTW (ft. BTOC): NR
No. of tubing + pump volumes purged: NA

Pneumatic Controller Tuning:
Initial air pressure = H (ft.) X 0.43 = NA psi

	Initial	2	3	4	5	6	7	8	Final
Pressure (psi)									
Refill Setting			BAILED						
Discharge Setting									
Flow rate (mL/min)									

Water Quality Parameter Measurements

Time	DTW (ft. BTOC)	Purge Rate (mL/min)	Cumulative Volume Purged (L)	Temp. (degree C)	Electrical Conductivity (uMhos/cm)	pH	Eh (mv)	DO (mg/L)	Turbidity (NTU)

DRY

GROUNDWATER SAMPLING FORM

00096618

Sheet 2 of 2

29WW03

Water Quality Parameter Measurements (continued)

Time	DTW (ft. BTOC)	Purge Rate (mL/min)	Cumulative Volume Purged (L)	Temp. (degree C) ±10%	Electrical Conductivity (uMhos/cm) ±3%	pH ±0.1	Eh (mv) ±10	DO (mg/L) ±10%	Turbidity (NTU) ±10%

10/25/08

10-20

Sampling

Sampling beginning time:_____ Sampling completion time:_____

Water Quality Parameter Measurements

Time	DTW (ft. BTOC)	Purge Rate (mL/min)	Cumulative Volume Purged (L)	Temp. (degree C)	Electrical Conductivity (uMhos/cm)	pH	Eh (mv)	DO (mg/L)	Turbidity (NTU)

DRY

Sample Information

Sample ID: 29WW03

Sample collection date/time: 10-25-08

Duplicate sample collected (Y/N):_____

Duplicate sample ID:_____

Split sample collected (Y/N):_____

Split sample ID:_____

COC No(s):_____

Requested Analysis	Method	Containers	Requested Analysis	Method	Containers

Comments: Little recharge after development, water very murky. Bailed dry again before sampling; No Sample collected

Abbreviations: BTOC - Below top of casing; DTW - Depth to water; H - head above pump intake; mL - milliliter; L - Liter

00096619

WELL DEVELOPMENT RECORD

WELL/PIEZOMETER ID 29MW104
SHEET 1 of 1

PROJECT NAME: Longhorn PROJECT NO.: 117591 DATE: 10/15/08

LOCATION: Karnack, Tx DATE INSTALLED: Redevelopment

TOTAL DEPTH (FTOC) 160 CASING DIAMETER 4"

METHODS OF DEVELOPMENT

☐ Swabbing ☐ Bailing ☑ Pumping ☐ Describe

Equipment decontaminated prior to development ☐ Yes ☐ NO

Describe 3-part rinse; potable water, alconox + H_2O, DI Water

EQUIPMENT NUMBERS:

pH Meter YSI 6280 EC Meter YSI 6280 Turbidity Meter YSI 6280 Thermometer YSI 6280

CASING VOLUME INFORMATION:

Casing ID (inch)	1.0	1.5	2.0	2.2	3.0	4.0	4.3	5.0	6.0	7.0	8.0
Unit Casing Volume (A) (gal/ft)	0.04	0.09	0.16	0.2	0.37	0.65	0.75	1.0	1.5	2.0	2.6

PURGING INFORMATION:

Measured Well Depth (B) 160 ft.

Measured Water Level Depth (C) 50.34 ft.

Length of Static Water Column (D) 160 (B) - 50.34 (C) = 109.66 ft.

Casing Water Volume (E) = 0.65 (A) x 109.66 (D) = 71.28 gal

Total Purge Volume = 360 (gal)

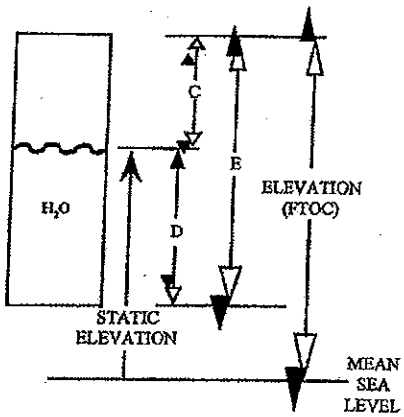

Date	Time	Water Level (FTOC)	Volume Removed (gal)	pH	EC	Temperature F or C	Turbidity/ Sand (ppm)	Comments
10/15/08	11:11	NR	90	9.05	0.99	19.48	0.0	Clear
10/15/08	11:56	NR	180	9.04	0.988	20.10	0.0	clear
10/15/08	12:48	NR	270	9.04	0.992	20.43	0.0	clear
10/16/08	13:21	NR	360	9.05	0.896	20.43	0.0	Clear
							10/15/08	

FIGURE 5

GROUNDWATER SAMPLING FORM

00096620

Sheet 1 of 2

29WW04

Operable Unit/Site ID: LHAAP-29
Project Name/#: Longhorn / 117591-0006A100
Weather: clear, 70s

Sampling location ID: 29WW04
Sample ID: 29WW04-102508
Collection Time/Date: 13:25 10-25-08

Pump Installation

Pump installation crew: A. Willmore / R. Wagner
PID/FID reading (well head/background): 0.0
Casing diameter (inches): 4"
Total well Depth (ft. BTOC): ~160'
Initial (pre-installation) DTW/time: 56.34
Final (after pump priming) DTW/time: NA
Free product (circle): LNAPL / DNAPL
Volume of water removed during priming (mL): NA
Discharge tube length (ft.): NR

Installation date/beginning time: 10-25-08 12:45
Installation date/completion time: 10-25-08 12:47
Screen Interval (ft. BTOC): 150 to 160
Pump intake depth (ft BTOC): 155'
Post-installation DTW/time: 50.03
Max. sustainable pump rate (mL/min): 200
Appearance of product: None
Discharge tube diameter (3/8" or 1/4"): 1/4"
Inlet reducer used (Y/N): N

Pneumatic Controller Tuning:
Initial air pressure = H (ft.) X 0.43 = NR psi

	Initial	2	3	4	5	6	7	8	Final
Pressure (psi)									
Refill Setting				NA					
Discharge Setting									
Flow rate (mL/min)									

Purging

Purging/sampling crew: A. Willmore / R. Wagner
Purge date/beginning time: 10-25-08 12:55
Initial (pre-purging) DTW (ft. BTOC): 50.03
Calculated tubing + pump volume: NA

PID/FID reading (well head/background): 0.0
Purge date/completion time: 10-25-08 13:40
Final (post-purging) DTW (ft. BTOC): 50.91
No. of tubing + pump volumes purged: NA

Pneumatic Controller Tuning:
Initial air pressure = H (ft.) X 0.43 = NR psi

	Initial	2	3	4	5	6	7	8	Final
Pressure (psi)	70								78
Refill Setting	10								10
Discharge Setting	5								5
Flow rate (mL/min)	200								200

Water Quality Parameter Measurements

Time	DTW (ft. BTOC)	Purge Rate (mL/min)	Cumulative Volume Purged (L)	Temp. (degree C)	Electrical Conductivity (uMhos/cm)	pH	Eh (mv)	DO (mg/L)	Turbidity (NTU)
13:00	50.91	200	1	19.81	0.898	9.00	-19.6	3.21	0.0
13:05	50.91	200	2	19.80	0.898	9.04	-30.1	3.22	0.0
13:10	50.91	200	3	19.62	0.898	9.04	-30.0	3.21	0.0
13:15	50.91	200	4	19.54	0.897	9.05	-29.1	3.22	0.0

GROUNDWATER SAMPLING FORM

00096621

Sheet ___ of ___

29WW04

Water Quality Parameter Measurements (continued)

Time	DTW (ft. BTOC)	Purge Rate (mL/min)	Cumulative Volume Purged (L)	Temp. (degree C) ±10%	Electrical Conductivity (uMhos/cm) ±3%	pH ±0.1	Eh (mv) ±10	DO (mg/L) ±10%	Turbidity (NTU) ±10%

10/25/08

10 - < 20

Sampling

Sampling beginning time: 13:25 Sampling completion time: 13:35

Water Quality Parameter Measurements

Time	DTW (ft. BTOC)	Purge Rate (mL/min)	Cumulative Volume Purged (L)	Temp. (degree C)	Electrical Conductivity (uMhos/cm)	pH	Eh (mv)	DO (mg/L)	Turbidity (NTU)
13:40	50.91	200	9	14.63	0.890	9.06	-26.9	2.77	[illegible]

Sample Information

Sample ID: 29WW04-102508

Sample collection date/time: 10-25-08 13:25

Duplicate sample collected (Y/N): N

Duplicate sample ID: NA

Split sample collected (Y/N): N

Split sample ID: NA

COC No(s): ___

Requested Analysis	Method	Containers	Requested Analysis	Method	Containers
TAL METALS		1-500 mL HDPE			

Comments: Purged & Sampled w/ bladder pump

Abbreviations: BTOC - Below top of casing; DTW - Depth to water; H - head above pump intake; mL - milliliter; L - Liter

00096622

WELL DEVELOPMENT RECORD

29W307

WELL/PIEZOMETER ID RMP
SHEET 1 of 1

PROJECT NAME: Longhorn PROJECT NO.: 117591 DATE: 10/15/08

LOCATION: Karnack, Tx DATE INSTALLED: Redevelopment

TOTAL DEPTH (FTOC) 39.85 CASING DIAMETER 4"

METHODS OF DEVELOPMENT

☐ Swabbing ☐ Bailing ☑ Pumping ☐ Describe

Equipment decontaminated prior to development ☐ Yes ☐ NO

Describe 3-part rinse; potable water, alconox + H_2O, DI Water

EQUIPMENT NUMBERS:

pH Meter YSI 6280 EC Meter YSI 6280 Turbidity Meter YSI 6280 Thermometer YSI 6280

CASING VOLUME INFORMATION:

Casing ID (inch)	1.0	1.5	2.0	2.2	3.0	4.0	4.3	5.0	6.0	7.0	8.0
Unit Casing Volume (A) (gal/ft)	0.04	0.09	0.16	0.2	0.37	0.65	0.75	1.0	1.5	2.0	2.6

PURGING INFORMATION:

Measured Well Depth (B) 39.85 ft.

Measured Water Level Depth (C) 28.28 ft.

Length of Static Water Column (D) 39.85 (B) - 28.28 (C) = 11.57 ft.

Casing Water Volume (E) = 0.65 (A) x 11.57 (D) = 7.52 gal

Total Purge Volume = 34 (gal)

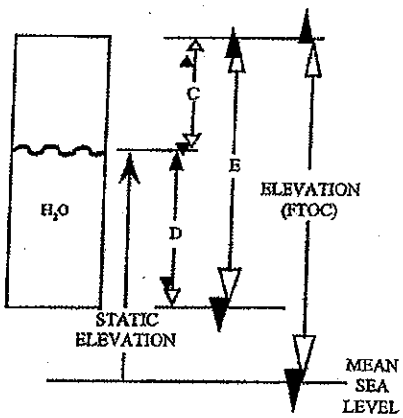

Date	Time	Water Level (FTOC)	Volume Removed (gal)	pH	EC	Temperature F or C	Turbidity/ Sand (ppm)	Comments
10/15/08	14:01	NR	10	6.38	3.371	16.84	1.3	clear
10/15/08	14:30	NR	20	6.38	3.374	16.87	1.0	clear
10/15/08	14:35	NR	30	6.39	3.372	16.85	1.2	clear
			Went dry @ 34 gallons					

FIGURE 5

GROUNDWATER SAMPLING FORM

00096623
Sheet 1 of 2

29WW07

Operable Unit/Site ID: LHAAP-29
Project Name/#: Longhorn / 117591.0006A100
Weather: clear; 50s

Sampling location ID: 29WW07
Sample ID: 29WW07-102508
Collection Time/Date: 11:00 / 10.25.08

Pump Installation

Pump installation crew: A. Willmore / R. Wagner
PID/FID reading (well head/background): 0.2
Casing diameter (inches): 4"
Total well Depth (ft. BTOC): 39.85
Initial (pre-installation) DTW/time: ~~28.28~~
Final (after pump priming) DTW/time: NA
Free product (circle): LNAPL / DNAPL
Volume of water removed during priming (mL): NA
Discharge tube length (ft.): 38'

Installation date/beginning time: 10.25.08 10:22
Installation date/completion time: 10.25.08 10:26
Screen Interval (ft. BTOC): 29.5 to 39.5
Pump intake depth (ft BTOC): ~~28.16~~ ~35'
Post-installation DTW/time: 28.16
Max. sustainable pump rate (mL/min): 100
Appearance of product: NA
Discharge tube diameter (3/8" or 1/4"): 1/4"
Inlet reducer used (Y/N): N

Pneumatic Controller Tuning:
Initial air pressure = H (ft.) X 0.43 = NR psi

	Initial	2	3	4	5	6	7	8	Final
Pressure (psi)									
Refill Setting									
Discharge Setting									
Flow rate (mL/min)									

Purging

Purging/sampling crew: A. Willmore / R. Wagner
Purge date/beginning time: 10/25/08 10:32
Initial (pre-purging) DTW (ft. BTOC): 28.16
Calculated tubing + pump volume: NA

PID/FID reading (well head/background): 0.2
Purge date/completion time: 10/25/08 11:07
Final (post-purging) DTW (ft. BTOC): 28.52
No. of tubing + pump volumes purged: NA

Pneumatic Controller Tuning:
Initial air pressure = H (ft.) X 0.43 = NR psi

	Initial	2	3	4	5	6	7	8	Final
Pressure (psi)	23								23
Refill Setting	10								10
Discharge Setting	5								5
Flow rate (mL/min)	100								100

Water Quality Parameter Measurements

Time	DTW (ft. BTOC)	Purge Rate (mL/min)	Cumulative Volume Purged (L)	Temp. (degree C)	Electrical Conductivity (uMhos/cm)	pH	Eh (mv)	DO (mg/L)	Turbidity (NTU)
10:37	28.52	100	0.5	16.87	3.355	6.41	-2.9	4.51	1.3
10:42	28.52	100	1.0	16.80	3.372	6.40	-0.5	4.79	1.0
10:47	28.52	100	1.5	16.84	3.374	6.40	-0.4	4.62	1.3
10:52	28.52	100	2.0	16.87	3.377	6.39	-0.1	4.69	0.7

GROUNDWATER SAMPLING FORM

00096624

Sheet 2 of 3

29WW07

Water Quality Parameter Measurements (continued)

Time	DTW (ft. BTOC)	Purge Rate (mL/min)	Cumulative Volume Purged (L)	Temp. (degree C) ±10%	Electrical Conductivity (uMhos/cm) ±3%	pH ±0.1	Eh (mv) ±10	DO (mg/L) ±10%	Turbidity (NTU) ±10%

10/25/08

10-20

Sampling

Sampling beginning time: 11:00 Sampling completion time: 11:10

Water Quality Parameter Measurements

Time	DTW (ft. BTOC)	Purge Rate (mL/min)	Cumulative Volume Purged (L)	Temp. (degree C)	Electrical Conductivity (uMhos/cm)	pH	Eh (mv)	DO (mg/L)	Turbidity (NTU)
11:07	28.52	100	3.5	16.89	3.374	6.39	1.2	4.70	66

Sample Information

Sample ID: 29WW07-102508

Sample collection date/time: 10-25-08 11:00

Duplicate sample collected (Y/N): N

Duplicate sample ID: NA

Split sample collected (Y/N): N

Split sample ID: NA

COC No(s):

Requested Analysis	Method	Containers	Requested Analysis	Method	Containers
TAL METALS		1-500mL HDPE			

Comments: Purged & Sampled w/ bladder pump

Abbreviations: BTOC - Below top of casing; DTW - Depth to water; H - head above pump intake; mL - milliliter; L - Liter

00096625

WELL DEVELOPMENT RECORD

WELL/PIEZOMETER ID 29MW08
SHEET 1 of 1

PROJECT NAME: Longhorn PROJECT NO.: 117591 DATE: 10/17/08
LOCATION: Karnack, Tx DATE INSTALLED: Redevelopment
TOTAL DEPTH (FTOC) 147' CASING DIAMETER 4"

METHODS OF DEVELOPMENT

☐ Swabbing ☐ Bailing ☑ Pumping ☐ Describe

Equipment decontaminated prior to development ☐ Yes ☐ NO

Describe 3-part rinse; potable water, alconox + H_2O, DI Water

EQUIPMENT NUMBERS:

pH Meter YSI 6280 EC Meter YSI 6280 Turbidity Meter YSI 6280 Thermometer YSI 6280

CASING VOLUME INFORMATION:

Casing ID (inch)	1.0	1.5	2.0	2.2	3.0	4.0	4.3	5.0	6.0	7.0	8.0
Unit Casing Volume (A) (gal/ft)	0.04	0.09	0.16	0.2	0.37	0.65	0.75	1.0	1.5	2.0	2.6

PURGING INFORMATION:

Measured Well Depth (B) 147 ft.

Measured Water Level Depth (C) 34.48 ft.

Length of Static Water Column (D) 147 (B) - 34.48 (C) = 92.52 ft.

Casing Water Volume (E) = 0.65 (A) x 92.52 (D) = 60.14 gal

Total Purge Volume = 300 (gal)

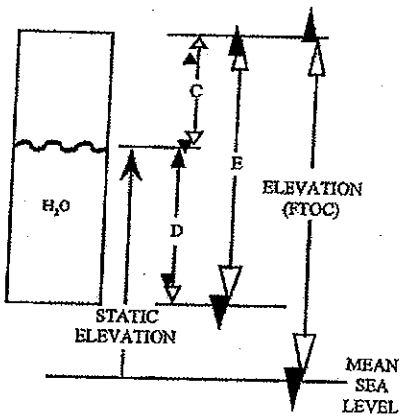

Date	Time	Water Level (FTOC)	Volume Removed (gal)	pH	EC	Temperature F or C	Turbidity/ Sand (ppm)	Comments
10/17/08	09:15	NR	100	8.16	1.006	20.54	10.4	clear
10/17/08	10:26	NR	200	8.06	1.007	20.31	9.1	clear
10/17/08	11:45	NR	300	8.09	1.006	20.06	8.6	clear

10/17/08

FIGURE 5

GROUNDWATER SAMPLING FORM

00096626

Sheet 1 of 2

29WW08

Operable Unit/Site ID: LHMP-29
Project Name/#: Longhorn / 117591
Weather: Clear; 80s

Sampling location ID: 29WW08
Sample ID: 29WW08-102408
Collection Time/Date: 15:10 10-24-08

Pump Installation

Pump installation crew: A. Willmore / R. Wagner
PID/FID reading (well head/background): 0.0
Casing diameter (inches): 4"
Total well Depth (ft. BTOC): ~147'
Initial (pre-installation) DTW/time: 37.48
Final (after pump priming) DTW/time: NA
Free product (circle): LNAPL / DNAPL
Volume of water removed during priming (mL): NA
Discharge tube length (ft.): 140'

Installation date/beginning time: 10/24/08 14:28
Installation date/completion time: 10/24/08 14:30
Screen Interval (ft. BTOC): 132 to 142
Pump intake depth (ft BTOC): 137
Post-installation DTW/time: 36.92
Max. sustainable pump rate (mL/min): 200
Appearance of product: None
Discharge tube diameter (3/8" or 1/4"): 1/4"
Inlet reducer used (Y/N): N

Pneumatic Controller Tuning:
Initial air pressure = H (ft.) X 0.43 = NA psi

	Initial	2	3	4	5	6	7	8	Final
Pressure (psi)	70								70
Refill Setting	10								10
Discharge Setting	5								5
Flow rate (mL/min)	200								200

Purging

Purging/sampling crew: A. Willmore / R. Wagner
Purge date/beginning time: 10-24-08 14:37
Initial (pre-purging) DTW (ft. BTOC): 36.92
Calculated tubing + pump volume: NA
Pneumatic Controller Tuning:
Initial air pressure = H (ft.) X 0.43 = NA psi

PID/FID reading (well head/background): 0.0
Purge date/completion time: 10-24-08 / 15:22
Final (post-purging) DTW (ft. BTOC): 38.07
No. of tubing + pump volumes purged: NA

	Initial	2	3	4	5	6	7	8	Final
Pressure (psi)	70								70
Refill Setting	10								10
Discharge Setting	5								5
Flow rate (mL/min)	200								200

Water Quality Parameter Measurements

Time	DTW (ft. BTOC)	Purge Rate (mL/min)	Cumulative Volume Purged (L)	Temp. (degree C)	Electrical Conductivity (uMhos/cm)	pH	Eh (mv)	DO (mg/L)	Turbidity (NTU)
14:42	38.07	200	0	21.38	1.013	8.09	43.5	2.94	15.4
14:47	38.07	200	3	21.55	1.012	8.08	42.6	2.73	15.0
14:52	38.07	200	4	21.55	1.012	8.07	41.9	2.89	14.3
14:57	38.07	200	5	21.44	1.004	8.04	35.6	2.81	13.3
15:02	38.07	200	6	21.34	1.004	8.02	35.3	2.80	9.4

GROUNDWATER SAMPLING FORM

00096627

Sheet 2 of 2

29WW08

Water Quality Parameter Measurements (continued)

Time	DTW (ft. BTOC)	Purge Rate (mL/min)	Cumulative Volume Purged (L)	Temp. (degree C) ±10%	Electrical Conductivity (uMhos/cm) ±3%	pH ±0.1	Eh (mv) ±10	DO (mg/L) ±10%	Turbidity (NTU) ±10%

10/24/08

10-20

Sampling

Sampling beginning time: 15:10 Sampling completion time: 15:15

Water Quality Parameter Measurements

Time	DTW (ft. BTOC)	Purge Rate (mL/min)	Cumulative Volume Purged (L)	Temp. (degree C)	Electrical Conductivity (uMhos/cm)	pH	Eh (mv)	DO (mg/L)	Turbidity (NTU)
15:22	38.07	200	10	21.37	1.004	8.01	32.1	2.76	4.3

Sample Information

Sample ID: 29WW08-102408 Sample collection date/time: 10-24-08 15:10

Duplicate sample collected (Y/N): N Duplicate sample ID: NA

Split sample collected (Y/N): N Split sample ID: NA

COC No(s):

Requested Analysis	Method	Containers	Requested Analysis	Method	Containers
TAL Metals		1-500 mL HDPE			

Comments: Purged & Sampled w/ bladder pump.

Abbreviations: BTOC - Below top of casing; DTW - Depth to water; H - head above pump intake; mL - milliliter; L - Liter

GROUNDWATER SAMPLING FORM

00096628
Sheet 1 of 8

Operable Unit/Site ID: LHAAP-27
Project Name/#: LHAAP - 117971
Weather: clear - mid 60s
Sampling location ID: 29WW29
Sample ID: NA
Collection Time/Date: NA

Pump Installation

Pump installation crew: A. Willmore / R. Wagner
PID/FID reading (well head/background): 0.0
Casing diameter (inches): 4"
Total well Depth (ft. BTOC): 29.83
Initial (pre-installation) DTW/time: DRY
Final (after pump priming) DTW/time: DR
Free product (circle): LNAPL / DNAPL
Volume of water removed during priming (mL): NA
Discharge tube length (ft.): NA
Installation date/beginning time: NA
Installation date/completion time: NA
Screen Interval (ft. BTOC): ~20 to ~30
Pump intake depth (ft BTOC): DRY
Post-installation DTW/time:
Max. sustainable pump rate (mL/min): NA
Appearance of product: No
Discharge tube diameter (3/8" or 1/4"): NA
Inlet reducer used (Y/N): N

Pneumatic Controller Tuning:
Initial air pressure = H (ft.) X 0.43 = NR psi

	Initial	2	3	4	5	6	7	8	Final
Pressure (psi)									
Refill Setting			DRY						
Discharge Setting									
Flow rate (mL/min)									

Purging

Purging/sampling crew: A. Willmore / R. Wagner
Purge date/beginning time:
Initial (pre-purging) DTW (ft. BTOC):
Calculated tubing + pump volume: NA
PID/FID reading (well head/background):
Purge date/completion time:
Final (post-purging) DTW (ft. BTOC):
No. of tubing + pump volumes purged:

Pneumatic Controller Tuning:
Initial air pressure = H (ft.) X 0.43 = _____ psi

	Initial	2	3	4	5	6	7	8	Final
Pressure (psi)									
Refill Setting			DRY						
Discharge Setting									
Flow rate (mL/min)									

Water Quality Parameter Measurements

Time	DTW (ft. BTOC)	Purge Rate (mL/min)	Cumulative Volume Purged (L)	Temp. (degree C)	Electrical Conductivity (uMhos/cm)	pH	Eh (mv)	DO (mg/L)	Turbidity (NTU)
				DRY					

GROUNDWATER SAMPLING FORM

2GWW09
00096629
Sheet ___ of ___

Water Quality Parameter Measurements (continued)

Time	DTW (ft. BTOC)	Purge Rate (mL/min)	Cumulative Volume Purged (L)	Temp. (degree C) ±10%	Electrical Conductivity (uMhos/cm) ±3%	pH ±0.1	Eh (mv) ±10	DO (mg/L) ±10%	Turbidity (NTU) ±10%

DRY

10 - 20

Sampling

Sampling beginning time:_____ Sampling completion time:_____

Water Quality Parameter Measurements

Time	DTW (ft. BTOC)	Purge Rate (mL/min)	Cumulative Volume Purged (L)	Temp. (degree C)	Electrical Conductivity (uMhos/cm)	pH	Eh (mv)	DO (mg/L)	Turbidity (NTU)

DRY

Sample Information

Sample ID: 2GWW09 - DRY
Duplicate sample collected (Y/N):_____
Split sample collected (Y/N):_____
COC No(s):_____

Sample collection date/time:_____
Duplicate sample ID:_____
Split sample ID:_____

Requested Analysis	Method	Containers	Requested Analysis	Method	Containers

DRY

Comments:

No Sample

Abbreviations: BTOC - Below top of casing; DTW - Depth to water; H - head above pump intake; mL - milliliter; L - Liter

00096630

WELL DEVELOPMENT RECORD

WELL/PIEZOMETER ID RW610
SHEET 1 of 1

PROJECT NAME: Longhorn PROJECT NO.: 117591 DATE: 10/7/08
LOCATION: Karnack, Tx DATE INSTALLED: Redevelopment
TOTAL DEPTH (FTOC) 31 CASING DIAMETER 4"

METHODS OF DEVELOPMENT

☐ Swabbing ☑ Bailing ☐ Pumping ☐ Describe
Equipment decontaminated prior to development ☐ Yes ☐ NO
Describe 3-part rinse; potable water, alconox + H_2O, DI Water

EQUIPMENT NUMBERS:
pH Meter YSI 6280 EC Meter YSI 6280 Turbidity Meter YSI 6280 Thermometer YSI 6280

CASING VOLUME INFORMATION:

Casing ID (inch)	1.0	1.5	2.0	2.2	3.0	4.0	4.3	5.0	6.0	7.0	8.0
Unit Casing Volume (A) (gal/ft)	0.04	0.09	0.16	0.2	0.37	0.65	0.75	1.0	1.5	2.0	2.6

PURGING INFORMATION:

Measured Well Depth (B) 31 ft.
Measured Water Level Depth (C) 28.09 ft.
Length of Static Water Column (D) 31 (B) - 28.09 (C) = 2.96 ft.

Casing Water Volume (E) = 0.65 (A) x 2.96 (D) = 1.92 gal

Total Purge Volume = 5 (gal)

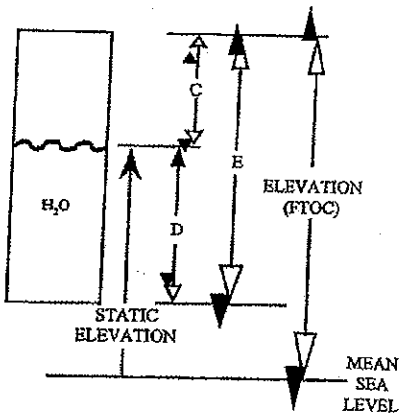

Date	Time	Water Level (FTOC)	Volume Removed (gal)	pH	EC	Temperature F or C	Turbidity/ Sand (ppm)	Comments
10/7/08	1110	NR	2	6.79	1.916	19.10	62.1	clear to cloudy
10/7/08	11:20	NR	4	6.76	1.916	19.51	31.4	clear
10/7/08	11:30	NR	5	6.78	1.908	19.91	28.6	clear

10/7/08

FIGURE 5

GROUNDWATER SAMPLING FORM

00096631
Sheet 1 of 2

Operable Unit/Site ID: LHAAP-29
Project Name/#: Longhorn / 117591-0006A100
Weather: clear, 60
Sampling location ID: 29WW10 ~~-10~~
Sample ID: 29WW10-102108
Collection Time/Date: 10:00 10/21/08

Pump Installation

Pump installation crew: A. Willmore / R. Wagner
PID/FID reading (well head/background): 0.0
Casing diameter (inches): 4"
Total well Depth (ft. BTOC): ~31'
Initial (pre-installation) DTW/time: ~28.04
Final (after pump priming) DTW/time: NA
Free product (circle): LNAPL / DNAPL
Volume of water removed during priming (mL): NA
Discharge tube length (ft.): 32
Installation date/beginning time: 10/21/08 09:25
Installation date/completion time: 10/21/08 09:30
Screen Interval (ft. BTOC): 21 to 31
Pump intake depth (ft BTOC): 30
Post-installation DTW/time: 28.04
Max. sustainable pump rate (mL/min): 100
Appearance of product: No
Discharge tube diameter (3/8" or 1/4"): 1/4"
Inlet reducer used (Y/N): N - Filter used

Pneumatic Controller Tuning:
Initial air pressure = H (ft.) X 0.43 = NA psi

	Initial	2	3	4	5	6	7	8	Final
Pressure (psi)	~~20~~								
Refill Setting	10 NA								
Discharge Setting	~~5~~								
Flow rate (mL/min)	~~100~~								

Purging

Purging/sampling crew: A. Willmore / R. Wagner
Purge date/beginning time: 10-21-08
Initial (pre-purging) DTW (ft. BTOC): 28.04
Calculated tubing + pump volume: NA
PID/FID reading (well head/background): 0.0
Purge date/completion time: 10-21-08
Final (post-purging) DTW (ft. BTOC): 29.63
No. of tubing + pump volumes purged: NA

Pneumatic Controller Tuning:
Initial air pressure = H (ft.) X 0.43 = NA psi

	Initial	2	3	4	5	6	7	8	Final
Pressure (psi)	~~20~~								
Refill Setting	~~10~~								
Discharge Setting	~~5~~		Peristaltic		Pump				
Flow rate (mL/min)	~~100~~ 100								

Water Quality Parameter Measurements

Time	DTW (ft. BTOC)	Purge Rate (mL/min)	Cumulative Volume Purged (L)	Temp. (degree C)	Electrical Conductivity (uMhos/cm)	pH	Eh (mv)	DO (mg/L)	Turbidity (NTU)
09:32	28.15	~~100~~ 80	1	17.61	1.919	6.78	101.3	2.09	31.1
09:42	28.92	~~100~~ 100	1.1	17.63	1.912	6.79	76.3	1.72	30.1
09:47	29.63	100	1.6	17.68	1.909	6.77	47.2	1.73	29.4
09:52	29.63	100	2.1	17.68	1.908	6.77	51.1	1.58	26.5

GROUNDWATER SAMPLING FORM

29WW18
00096632
Sheet 2 of 4

Water Quality Parameter Measurements (continued)

Time	DTW (ft. BTOC)	Purge Rate (mL/min)	Cumulative Volume Purged (L)	Temp. (degree C) ±10%	Electrical Conductivity (uMhos/cm) ±3%	pH ±0.1	Eh (mv) ±10	DO (mg/L) ±10%	Turbidity (NTU) ±10%

10/21/08

10-20

Sampling

Sampling beginning time: 10:00 Sampling completion time: 10:10

Water Quality Parameter Measurements

Time	DTW (ft. BTOC)	Purge Rate (mL/min)	Cumulative Volume Purged (L)	Temp. (degree C)	Electrical Conductivity (uMhos/cm)	pH	Eh (mv)	DO (mg/L)	Turbidity (NTU)
10:15	29.90	100	4.3	17.69	1.907	6.76	52.4	1.57	25.3

Sample Information

Sample ID: 29WW10-102108
Sample collection date/time: 10-21-08 10:05
Duplicate sample collected (Y/N): N
Duplicate sample ID: NA
Split sample collected (Y/N): N
Split sample ID: NA
COC No(s):

Requested Analysis	Method	Containers	Requested Analysis	Method	Containers
TAL METALS		1-500 mL HDPE			

Comments: 10 µ filter used during sampling, Used peristaltic Could NOT sustain water level.

Abbreviations: BTOC - Below top of casing; DTW - Depth to water; H - head above pump intake; mL - milliliter; L - Liter

00096633

WELL DEVELOPMENT RECORD

WELL/PIEZOMETER ID 29MW12
SHEET 1 of 1

PROJECT NAME: Longhorn PROJECT NO.: 117591 DATE: 10/15/08

LOCATION: Karnack, Tx DATE INSTALLED: Redevelopment

TOTAL DEPTH (FTOC) ~37' CASING DIAMETER 4"

METHODS OF DEVELOPMENT

☐ Swabbing ☒ Bailing ☐ Pumping ☐ Describe DRY

Equipment decontaminated prior to development ☐ Yes ☐ NO

Describe 3-part rinse; potable water, alconox + H_2O, DI water

EQUIPMENT NUMBERS:

pH Meter YSI 6280 EC Meter YSI 6280 Turbidity Meter YSI 6280 Thermometer YSI 6280

CASING VOLUME INFORMATION:

Casing ID (inch)	1.0	1.5	2.0	2.2	3.0	4.0	4.3	5.0	6.0	7.0	8.0
Unit Casing Volume (A) (gal/ft)	0.04	0.09	0.16	0.2	0.37	0.65	0.75	1.0	1.5	2.0	2.6

PURGING INFORMATION:

Measured Well Depth (B) _____

Measured Water Level Depth (C) _____

Length of Static Water Column (D) _____ (B) - _____ (C) = _____ ft.

DRY

Casing Water Volume (E) = 0.65 (A) x _____ (D) = _____ gal

Total Purge Volume = _____ (gal)

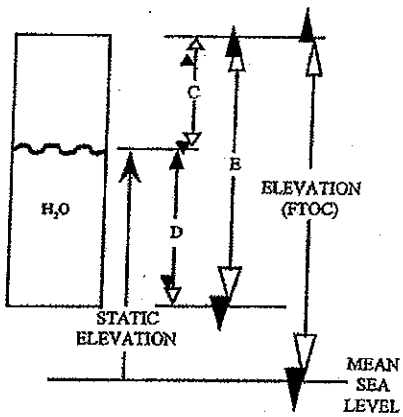

Date	Time	Water Level (FTOC)	Volume Removed (gal)	pH	EC	Temperature F or C	Turbidity/ Sand (ppm)	Comments
	10:15							

DRY

10/15/08

FIGURE 5

GROUNDWATER SAMPLING FORM

00096634
Sheet 1 of 2

Operable Unit/Site ID: LHAAP-29
Project Name/#: Longhorn
Weather: Clear, Hi 60s; Low 70s
Sampling location ID: SMW17
Sample ID: DRY
Collection Time/Date: 10/24/08 - DRY

Pump Installation

Pump installation crew: A. Willmon / R. Wagner
PID/FID reading (well head/background): 0.0
Casing diameter (inches): 4"
Total well Depth (ft. BTOC): ~37
Initial (pre-installation) DTW/time: NA
Final (after pump priming) DTW/time:
Free product (circle): LNAPL / DNAPL
Volume of water removed during priming (mL): NA
Discharge tube length (ft.):
Pneumatic Controller Tuning:
Initial air pressure = H (ft.) X 0.43 = NA psi

Installation date/beginning time: NA
Installation date/completion time:
Screen Interval (ft. BTOC): 27 to 37
Pump intake depth (ft BTOC):
Post-installation DTW/time:
Max. sustainable pump rate (mL/min):
Appearance of product:
Discharge tube diameter (3/8" or 1/4"):
Inlet reducer used (Y/N):

	Initial	2	3	4	5	6	7	8	Final
Pressure (psi)									
Refill Setting									
Discharge Setting									
Flow rate (mL/min)									

DRY

Purging

Purging/sampling crew: NA
Purge date/beginning time:
Initial (pre-purging) DTW (ft. BTOC):
Calculated tubing + pump volume: NA
Pneumatic Controller Tuning:
Initial air pressure = H (ft.) X 0.43 = _____ psi

PID/FID reading (well head/background): NA
Purge date/completion time:
Final (post-purging) DTW (ft. BTOC):
No. of tubing + pump volumes purged:

	Initial	2	3	4	5	6	7	8	Final
Pressure (psi)									
Refill Setting									
Discharge Setting									
Flow rate (mL/min)									

DRY

Water Quality Parameter Measurements

Time	DTW (ft. BTOC)	Purge Rate (mL/min)	Cumulative Volume Purged (L)	Temp. (degree C)	Electrical Conductivity (uMhos/cm)	pH	Eh (mv)	DO (mg/L)	Turbidity (NTU)

DRY

GROUNDWATER SAMPLING FORM

00096635

Sheet 2 of 2

29WW12

Water Quality Parameter Measurements (continued)

Time	DTW (ft. BTOC)	Purge Rate (mL/min)	Cumulative Volume Purged (L)	Temp. (degree C) ±10%	Electrical Conductivity (uMhos/cm) ±3%	pH ±0.1	Eh (mv) ±10	DO (mg/L) ±10%	Turbidity (NTU) ±10%

DRY

10-20

Sampling

Sampling beginning time:_____ Sampling completion time:_____

Water Quality Parameter Measurements

Time	DTW (ft. BTOC)	Purge Rate (mL/min)	Cumulative Volume Purged (L)	Temp. (degree C)	Electrical Conductivity (uMhos/cm)	pH	Eh (mv)	DO (mg/L)	Turbidity (NTU)

DRY

Sample Information

Sample ID: 29WW12 DRY

Sample collection date/time:_____

Duplicate sample collected (Y/N):_____

Duplicate sample ID:_____ DRY

Split sample collected (Y/N):_____

Split sample ID:_____

COC No(s):_____

Requested Analysis	Method	Containers	Requested Analysis	Method	Containers

DRY

Comments: No Sample Collected, dry well

Abbreviations: BTOC - Below top of casing; DTW - Depth to water; H - head above pump intake; mL - milliliter; L - Liter

00096636

WELL DEVELOPMENT RECORD

WELL/PIEZOMETER ID 20WW13
SHEET 1 of 1

PROJECT NAME: Longhorn PROJECT NO.: 117591 DATE: 10/15/08

LOCATION: Karnack, Tx DATE INSTALLED: Redevelopment

TOTAL DEPTH (FTOC) 59.61 CASING DIAMETER 4"

METHODS OF DEVELOPMENT

☐ Swabbing ☐ Bailing ☒ Pumping ☐ Describe

Equipment decontaminated prior to development ☐ Yes ☐ NO

Describe 3-part rinse; potable water, alconox + H_2O, DI Water

EQUIPMENT NUMBERS:

pH Meter YSI 6280 EC Meter YSI 6280 Turbidity Meter YSI 6280 Thermometer YSI 6280

CASING VOLUME INFORMATION:

Casing ID (inch)	1.0	1.5	2.0	2.2	3.0	4.0	4.3	5.0	6.0	7.0	8.0
Unit Casing Volume (A) (gal/ft)	0.04	0.09	0.16	0.2	0.37	0.65	0.75	1.0	1.5	2.0	2.6

PURGING INFORMATION:

Measured Well Depth (B) 59.61 ft.

Measured Water Level Depth (C) 37.89 ft.

Length of Static Water Column (D) 59.61 (B) - 37.89 (C) = 21.72 ft.

Casing Water Volume (E) = 0.65 (A) x 21.72 (D) = 14.12 gal

Total Purge Volume = 71 (gal)

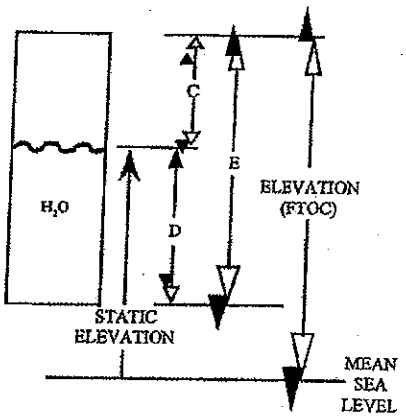

Date	Time	Water Level (FTOC)	Volume Removed (gal)	pH	EC	Temperature F or C	Turbidity/ Sand (ppm)	Comments
10/15/08	08:10	NR	15	7.01	0.937	18.06	47.4	cloudy
10/15/08	08:40	NR	30	7.03	0.934	18.12	61.0	cloudy
10/15/08	09:12	NR	45	7.09	0.938	18.13	101.3	cloudy
10/15/08	09:37	NR	60	7.01	0.937	18.17	163.2	cloudy

10/15/08

FIGURE 5

GROUNDWATER SAMPLING FORM

00096637
Sheet 1 of 2

Operable Unit/Site ID: LHAAP-29
Project Name/#: Longhorn / 117591.0006.A100
Weather: clear, Low 70's

Sampling location ID: 29GW13
Sample ID: 29GW13-102408
Collection Time/Date: 13:40 10.24.08

Pump Installation

Pump installation crew: A. Willmore / R. Wagner
PID/FID reading (well head/background): 0.0
Casing diameter (inches): 4"
Total well Depth (ft. BTOC): 59.61
Initial (pre-installation) DTW/time: 37.86
Final (after pump priming) DTW/time: 38.19
Free product (circle): LNAPL / DNAPL
Volume of water removed during priming (mL): NA
Discharge tube length (ft.): 68'

Installation date/beginning time: 10/24/08 1243
Installation date/completion time: 10/24/08 12:45
Screen Interval (ft. BTOC): 50 to 60
Pump intake depth (ft BTOC): 55'
Post-installation DTW/time: 37.70
Max. sustainable pump rate (mL/min): 100
Appearance of product: None
Discharge tube diameter (3/8" or 1/4"): 1/4"
Inlet reducer used (Y/N): N

Pneumatic Controller Tuning:
Initial air pressure = H (ft.) X 0.43 = NR psi

	Initial	2	3	4	5	6	7	8	Final
Pressure (psi)									
Refill Setting									
Discharge Setting									
Flow rate (mL/min)									

Purging

Purging/sampling crew: A. Willmore / R. Wagner
Purge date/beginning time: 10.24.08 12:57
Initial (pre-purging) DTW (ft. BTOC): 37.70
Calculated tubing + pump volume: NA

PID/FID reading (well head/background): 0.0
Purge date/completion time: 10.24.08 13:56
Final (post-purging) DTW (ft. BTOC): 38.19
No. of tubing + pump volumes purged: NA

Pneumatic Controller Tuning:
Initial air pressure = H (ft.) X 0.43 = NR psi

	Initial	2	3	4	5	6	7	8	Final
Pressure (psi)	~~50~~ 45								45
Refill Setting	10								10
Discharge Setting	5								5
Flow rate (mL/min)	100								100

Water Quality Parameter Measurements

Time	DTW (ft. BTOC)	Purge Rate (mL/min)	Cumulative Volume Purged (L)	Temp. (degree C)	Electrical Conductivity (uMhos/cm)	pH	Eh (mv)	DO (mg/L)	Turbidity (NTU)
13:01	38.19	100	1	18.07	0.925	7.02	48.6	6.57	73.1
13:06	38.19	100	1.5	18.05	0.901	7.01	39.1	4.89	63.2
13:11	38.19	100	2.0	18.05	0.938	7.04	31.8	3.98	54.2
13:26	38.19	100	2.5	18.05	0.937	7.02	34.7	3.75	42.6
13:31	38.19	100	3.0	18.05	0.937	7.01	32.1	3.74	~~39.2~~ 39.40
13:36	38.19	100	3.5	18.06	0.937	7.01	32.0	3.71	36.5

GROUNDWATER SAMPLING FORM

00096638

Sheet 2 of 2

29WW13

Water Quality Parameter Measurements (continued)

Time	DTW (ft. BTOC)	Purge Rate (mL/min)	Cumulative Volume Purged (L)	Temp. (degree C) ±10%	Electrical Conductivity (uMhos/cm) ±3%	pH ±0.1	Eh (mv) ±10	DO (mg/L) ±10%	Turbidity (NTU) ±10%

10/24/08

10 - 20

Sampling

Sampling beginning time: ~~1340~~ 1350

Sampling completion time: ~~1350~~ 1400 ~~1350~~

Water Quality Parameter Measurements

Time	DTW (ft. BTOC)	Purge Rate (mL/min)	Cumulative Volume Purged (L)	Temp. (degree C)	Electrical Conductivity (uMhos/cm)	pH	Eh (mv)	DO (mg/L)	Turbidity (NTU)
13:56	38.19	100	5.5	18.05	0.937	7.02	31.6	3.76	31.4

Sample Information

Sample ID: 29WW13-102408

Sample collection date/time: 10/24/08 ~~1346~~ 1346

Duplicate sample collected (Y/N): N

Duplicate sample ID: NA

Split sample collected (Y/N): N

Split sample ID: NA

COC No(s):

Requested Analysis	Method	Containers	Requested Analysis	Method	Containers
TAL Metals		1-500 mL HDPE			
VOCs		3-40mL voas			

Comments: Purged and sampled w/ bladder pump. Used 10.1 Filter

Abbreviations: BTOC - Below top of casing; DTW - Depth to water; H - head above pump intake; mL - milliliter; L - Liter

00096639

WELL DEVELOPMENT RECORD

WELL/PIEZOMETER ID 29MW15
SHEET 1 of 1

PROJECT NAME: Longhorn PROJECT NO.: 117591 DATE: 10/15/08
LOCATION: Karnack, Tx DATE INSTALLED: Redevelopment
TOTAL DEPTH (FTOC) 33.11' CASING DIAMETER 4"

METHODS OF DEVELOPMENT

☐ Swabbing ☒ Bailing ☐ Pumping ☐ Describe

Equipment decontaminated prior to development ☐ Yes ☐ NO
Describe 3-part rinse; potable water, alconox + H_2O, DI Water

EQUIPMENT NUMBERS:
pH Meter YSI 6280 EC Meter YSI 6280 Turbidity Meter YSI 6280 Thermometer YSI 6280

CASING VOLUME INFORMATION:

Casing ID (inch)	1.0	1.5	2.0	2.2	3.0	4.0	4.3	5.0	6.0	7.0	8.0
Unit Casing Volume (A) (gal/ft)	0.04	0.09	0.16	0.2	0.37	0.65	0.75	1.0	1.5	2.0	2.6

PURGING INFORMATION:

Measured Well Depth (B) DRY ft.
Measured Water Level Depth (C) ft.
Length of Static Water Column (D) ____ (B) - ____ (C) = ____ ft.

Casing Water Volume (E) = 0.65 (A) x ____ (D) = ____ gal

Total Purge Volume = ____ (gal)

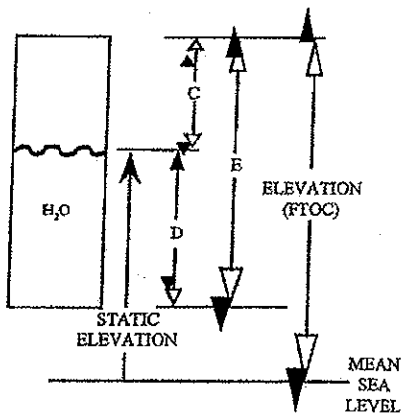

Date	Time	Water Level (FTOC)	Volume Removed (gal)	pH	EC	Temperature F or C	Turbidity/ Sand (ppm)	Comments

DRY

FIGURE 5

GROUNDWATER SAMPLING FORM

00096640
Sheet 1 of 2

29WW15

Operable Unit/Site ID: LHAA1-29
Project Name/#: Longhorn 117591
Weather: clear, cal

Sampling location ID: 29WW15
Sample ID: NA
Collection Time/Date: 10-22-08 · 10-22-09

Pump Installation

Pump installation crew: A Willmon / R.Wagner
PID/FID reading (well head/background): 0.0
Casing diameter (inches): 4"
Total well Depth (ft. BTOC): 33.11
Initial (pre-installation) DTW/time: DRY
Final (after pump priming) DTW/time:
Free product (circle): LNAPL / DNAPL
Volume of water removed during priming (mL):
Discharge tube length (ft.):

Installation date/beginning time: DRY
Installation date/completion time:
Screen Interval (ft. BTOC): 23 to 33
Pump intake depth (ft BTOC):
Post-installation DTW/time:
Max. sustainable pump rate (mL/min):
Appearance of product:
Discharge tube diameter (3/8" or 1/4"):
Inlet reducer used (Y/N):

Pneumatic Controller Tuning:
Initial air pressure = H (ft.) X 0.43 = _____ psi

	Initial	2	3	4	5	6	7	8	Final
Pressure (psi)			DRY						
Refill Setting									
Discharge Setting									
Flow rate (mL/min)									

Purging

Purging/sampling crew: A.Willmon / R.Wagner
Purge date/beginning time: NA
Initial (pre-purging) DTW (ft. BTOC):
Calculated tubing + pump volume: NA

PID/FID reading (well head/background):
Purge date/completion time: NA
Final (post-purging) DTW (ft. BTOC):
No. of tubing + pump volumes purged:

Pneumatic Controller Tuning:
Initial air pressure = H (ft.) X 0.43 = _____ psi

	Initial	2	3	4	5	6	7	8	Final
Pressure (psi)									
Refill Setting									
Discharge Setting			DRY						
Flow rate (mL/min)									

Water Quality Parameter Measurements

Time	DTW (ft. BTOC)	Purge Rate (mL/min)	Cumulative Volume Purged (L)	Temp. (degree C)	Electrical Conductivity (uMhos/cm)	pH	Eh (mv)	DO (mg/L)	Turbidity (NTU)
				DRY					

GROUNDWATER SAMPLING FORM

00096641

Sheet 2 of 2

29WW15

Water Quality Parameter Measurements (continued)

Time	DTW (ft. BTOC)	Purge Rate (mL/min)	Cumulative Volume Purged (L)	Temp. (degree C) ±10%	Electrical Conductivity (uMhos/cm) ±3%	pH ±0.1	Eh (mv) ±10	DO (mg/L) ±10%	Turbidity (NTU) ±10%

10-20

DRY

Sampling

Sampling beginning time: NA

Sampling completion time: NA

Water Quality Parameter Measurements

Time	DTW (ft. BTOC)	Purge Rate (mL/min)	Cumulative Volume Purged (L)	Temp. (degree C)	Electrical Conductivity (uMhos/cm)	pH	Eh (mv)	DO (mg/L)	Turbidity (NTU)

DRY

Sample Information

Sample ID: NA

Duplicate sample collected (Y/N):

Split sample collected (Y/N): NA

COC No(s):

Sample collection date/time:

Duplicate sample ID: NA

Split sample ID:

Requested Analysis	Method	Containers	Requested Analysis	Method	Containers

DRY

Comments: DRY Well

Abbreviations: BTOC - Below top of casing; DTW - Depth to water; H - head above pump intake; mL - milliliter; L - Liter

00096642

WELL DEVELOPMENT RECORD

WELL/PIEZOMETER ID 29MW16
SHEET 1 of 1

PROJECT NAME: Longhorn PROJECT NO.: 117591 DATE: 10/19/08

LOCATION: Karnack, Tx DATE INSTALLED: Redevelopment

TOTAL DEPTH (FTOC) 88 CASING DIAMETER 4"

METHODS OF DEVELOPMENT

☐ Swabbing ☐ Bailing ☐ Pumping ☐ Describe

Equipment decontaminated prior to development ☐ Yes ☐ NO

Describe 3-part rinse; potable water, alconox + H_2O, DI Water

EQUIPMENT NUMBERS:

pH Meter YSI 6280 EC Meter YSI 6280 Turbidity Meter YSI 6280 Thermometer YSI 6280

CASING VOLUME INFORMATION:

Casing ID (inch)	1.0	1.5	2.0	2.2	3.0	4.0	4.3	5.0	6.0	7.0	8.0
Unit Casing Volume (A) (gal/ft)	0.04	0.09	0.16	0.2	0.37	0.65	0.75	1.0	1.5	2.0	2.6

PURGING INFORMATION:

Measured Well Depth (B) 88 ft.

Measured Water Level Depth (C) 45.81 ft.

Length of Static Water Column (D) 88 (B) - 45.81 (C) = 42.19 ft.

Casing Water Volume (E) = 0.65 (A) x 42.19 (D) = 27.42 gal

Total Purge Volume = 130 (gal)

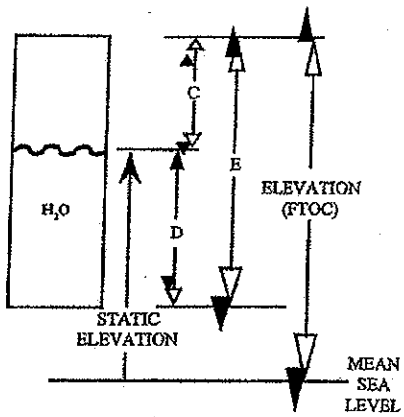

Date	Time	Water Level (FTOC)	Volume Removed (gal)	pH	EC	Temperature F or C	Turbidity/ Sand (ppm)	Comments
10/19/08	16:36	NR	30	6.98		17.01	0.0	clear
10/19/08	16:52	NR	60	6.96		16.93	0.0	clear
10/19/08	17:21	NR	90	6.90		16.82	0.0	clear
10/19/08	17:31	NR	120	6.97		16.61	0.0	clear
10/19/08	17:43	NR	140	6.96		16.41	0.0	clear

FIGURE 5

GROUNDWATER SAMPLING FORM

00096643
Sheet 1 of 2

Operable Unit/Site ID: LHMP-39
Project Name/#: Longhorn / 117591
Weather: clear, 60s
Sampling location ID: 29MW16
Sample ID: DQXMW16-102808
Collection Time/Date: 14:35 10-28-08

Pump Installation

Pump installation crew: A. Willmore / R. Wagner
PID/FID reading (well head/background): 7.3
Casing diameter (inches): 4"
Total well Depth (ft. BTOC): 90'
Initial (pre-installation) DTW/time: 45.81
Final (after pump priming) DTW/time: NA
Free product (circle): LNAPL / DNAPL
Volume of water removed during priming (mL): NA
Discharge tube length (ft.): 88'
Installation date/beginning time: 10-28-08 14:06
Installation date/completion time: 10-28-08 14:10
Screen Interval (ft. BTOC): 80 to 90
Pump intake depth (ft BTOC): 85'
Post-installation DTW/time: 45.53
Max. sustainable pump rate (mL/min): 200
Appearance of product: None
Discharge tube diameter (3/8" or 1/4"): 1/4"
Inlet reducer used (Y/N): N

Pneumatic Controller Tuning:
Initial air pressure = H (ft.) X 0.43 = MP psi

	Initial	2	3	4	5	6	7	8	Final
Pressure (psi)									
Refill Setting									
Discharge Setting									
Flow rate (mL/min)									

Purging

Purging/sampling crew: A. Willmore / R. Wagner
Purge date/beginning time: 10-28-08 14:11
Initial (pre-purging) DTW (ft. BTOC): 45.53
Calculated tubing + pump volume: NA
PID/FID reading (well head/background): 7.3
Purge date/completion time: 10-28-08
Final (post-purging) DTW (ft. BTOC): 45.87
No. of tubing + pump volumes purged: NA

Pneumatic Controller Tuning:
Initial air pressure = H (ft.) X 0.43 = MP psi

	Initial	2	3	4	5	6	7	8	Final
Pressure (psi)	65								65
Refill Setting	10								10
Discharge Setting	5								5
Flow rate (mL/min)	200								200

Water Quality Parameter Measurements

Time	DTW (ft. BTOC)	Purge Rate (mL/min)	Cumulative Volume Purged (L)	Temp. (degree C)	Electrical Conductivity (µMhos/cm)	pH	Eh (mv)	DO (mg/L)	Turbidity (NTU)
14:16	45.82	200	1	17.91	1.467	6.72	-35.7	2.31	0.0
14:21	45.82	200	2	17.52	1.482	6.95	-41.8	2.16	0.0
14:26	45.82	200	3	17.85	1.481	6.95	-41.3	2.09	0.0
14:31	45.82	200	4	17.90	1.487	6.95	-41.9	2.04	0.0

GROUNDWATER SAMPLING FORM

00096644

Sheet ___ of ___

29WW16

Water Quality Parameter Measurements (continued)

Time	DTW (ft. BTOC)	Purge Rate (mL/min)	Cumulative Volume Purged (L)	Temp. (degree C) ±10%	Electrical Conductivity (uMhos/cm) ±3%	pH ±0.1	Eh (mv) ±10	DO (mg/L) ±10%	Turbidity (NTU) ±10%

10/28/08

10/20

Sampling

Sampling beginning time: 14:35 Sampling completion time: 14:45

Water Quality Parameter Measurements

Time	DTW (ft. BTOC)	Purge Rate (mL/min)	Cumulative Volume Purged (L)	Temp. (degree C)	Electrical Conductivity (uMhos/cm)	pH	Eh (mv)	DO (mg/L)	Turbidity (NTU)
14:51	95.82	200	8	17.58	1.482	6.96	-48.1	1.92	0.0

Sample Information

Sample ID: 29WW16-102808

Sample collection date/time: 10.28.08 14:35

Duplicate sample collected (Y/N): N

Duplicate sample ID: NA

Split sample collected (Y/N): N

Split sample ID: NP

COC No(s): NA

Requested Analysis	Method	Containers	Requested Analysis	Method	Containers
VOCs		3-40 mL voa vials			

Comments: Purged & Sampled w/ bladder pump

Abbreviations: BTOC - Below top of casing; DTW - Depth to water; H - head above pump intake; mL - milliliter; L - Liter

00096645

WELL DEVELOPMENT RECORD

WELL/PIEZOMETER ID 29WW17
SHEET 1 of 1

PROJECT NAME: Longhorn PROJECT NO.: 117591 DATE: 10/16/08
LOCATION: Harnack, Tx DATE INSTALLED: Redevelopment
TOTAL DEPTH (FTOC) 31.45 CASING DIAMETER 4"

METHODS OF DEVELOPMENT

☐ Swabbing ☒ Bailing ☐ Pumping ☐ Describe DR-1

Equipment decontaminated prior to development ☐ Yes ☐ NO

Describe 3-part rinse; potable water, alconox + H_2O, DI water

EQUIPMENT NUMBERS:

pH Meter YSI 6280 EC Meter YSI 6280 Turbidity Meter YSI 6280 Thermometer YSI 6280

CASING VOLUME INFORMATION:

Casing ID (inch)	1.0	1.5	2.0	2.2	3.0	4.0	4.3	5.0	6.0	7.0	8.0
Unit Casing Volume (A) (gal/ft)	0.04	0.09	0.16	0.2	0.37	0.65	0.75	1.0	1.5	2.0	2.6

PURGING INFORMATION:

Measured Well Depth (B) 31.45 ft.

Measured Water Level Depth (C) _____ ft.

Length of Static Water Column (D) _____ ft.
(B) (C)

Casing Water Volume (E) = 0.65 x _____ = _____ gal
(A) (D)

Total Purge Volume = _____ (gal)

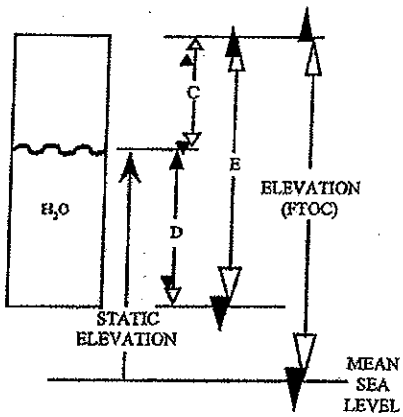

Date	Time	Water Level (FTOC)	Volume Removed (gal)	pH	EC	Temperature F or C	Turbidity/ Sand (ppm)	Comments

FIGURE 5

GROUNDWATER SAMPLING FORM

00096646
Sheet 1 of 2

29WW17

Operable Unit/Site ID: LHAAP-29
Project Name/#: Longhorn
Weather: PTY cloudy, 60s

Sampling location ID: 29WW17
Sample ID: DRY
Collection Time/Date: 10/23/08 · No Sample

Pump Installation

Pump installation crew: A. Willmore / R. Wagner
PID/FID reading (well head/background): 0.0
Casing diameter (inches): 4" NA
Total well Depth (ft. BTOC): 31.45
Initial (pre-installation) DTW/time:
Final (after pump priming) DTW/time: NA
Free product (circle): LNAPL / DNAPL NA
Volume of water removed during priming (mL): NA
Discharge tube length (ft.):

Installation date/beginning time: 10/23/08
Installation date/completion time:
Screen Interval (ft. BTOC): 21 to 31
Pump intake depth (ft BTOC):
Post-installation DTW/time:
Max. sustainable pump rate (mL/min): NA
Appearance of product:
Discharge tube diameter (3/8" or 1/4"):
Inlet reducer used (Y/N):

Pneumatic Controller Tuning:
Initial air pressure = H (ft.) X 0.43 = _____ psi

	Initial	2	3	4	5	6	7	8	Final
Pressure (psi)			DRY						
Refill Setting									
Discharge Setting									
Flow rate (mL/min)									

Purging

Purging/sampling crew: A. Willmore / R. Wagner
Purge date/beginning time: NA
Initial (pre-purging) DTW (ft. BTOC):
Calculated tubing + pump volume: NA

PID/FID reading (well head/background): 0.6
Purge date/completion time:
Final (post-purging) DTW (ft. BTOC): NA
No. of tubing + pump volumes purged:

Pneumatic Controller Tuning:
Initial air pressure = H (ft.) X 0.43 = NA psi

	Initial	2	3	4	5	6	7	8	Final
Pressure (psi)			DRY						
Refill Setting									
Discharge Setting									
Flow rate (mL/min)									

Water Quality Parameter Measurements

Time	DTW (ft. BTOC)	Purge Rate (mL/min)	Cumulative Volume Purged (L)	Temp. (degree C)	Electrical Conductivity (uMhos/cm)	pH	Eh (mv)	DO (mg/L)	Turbidity (NTU)
				DRY					

GROUNDWATER SAMPLING FORM

00096647

Sheet 2 of 2

29WW17

Water Quality Parameter Measurements (continued)

Time	DTW (ft. BTOC)	Purge Rate (mL/min)	Cumulative Volume Purged (L)	Temp. (degree C) ±10%	Electrical Conductivity (uMhos/cm) ±3%	pH ±0.1	Eh (mv) ±10	DO (mg/L) ±10%	Turbidity (NTU) ±10%

DRY

10-20

Sampling

Sampling beginning time:_____ Sampling completion time:_____

Water Quality Parameter Measurements

Time	DTW (ft. BTOC)	Purge Rate (mL/min)	Cumulative Volume Purged (L)	Temp. (degree C)	Electrical Conductivity (uMhos/cm)	pH	Eh (mv)	DO (mg/L)	Turbidity (NTU)

DRY

Sample Information

Sample ID: NA

Duplicate sample collected (Y/N): NA

Split sample collected (Y/N): NA

COC No(s):_____

Sample collection date/time: NA

Duplicate sample ID:_____

Split sample ID:_____

Requested Analysis	Method	Containers	Requested Analysis	Method	Containers

DRY

Comments:

DRY

Abbreviations: BTOC - Below top of casing; DTW - Depth to water; H - head above pump intake; mL - milliliter; L - Liter

00096648

WELL DEVELOPMENT RECORD

WELL/PIEZOMETER ID 29WW19
SHEET 1 of 1

PROJECT NAME: Longhorn PROJECT NO.: 117591 DATE: 10/18/08

LOCATION: Karnack, Tx DATE INSTALLED: Redevelopment

TOTAL DEPTH (FTOC) 35.32 CASING DIAMETER 4"

METHODS OF DEVELOPMENT

☐ Swabbing ☐ Bailing ☒ Pumping ☐ Describe

Equipment decontaminated prior to development ☐ Yes ☐ NO

Describe 3-part rinse; potable water, alconox + H_2O, DI Water

EQUIPMENT NUMBERS:

pH Meter YSI 6280 EC Meter YSI 6280 Turbidity Meter YSI 6280 Thermometer YSI 6280

CASING VOLUME INFORMATION:

Casing ID (inch)	1.0	1.5	2.0	2.2	3.0	4.0	4.3	5.0	6.0	7.0	8.0
Unit Casing Volume (A) (gal/ft)	0.04	0.09	0.16	0.2	0.37	0.65	0.75	1.0	1.5	2.0	2.6

PURGING INFORMATION:

Measured Well Depth (B) 35.32 ft.

Measured Water Level Depth (C) 25.56 ft.

Length of Static Water Column (D) 35.32 (B) − 25.56 (C) = 9.76 ft.

Casing Water Volume (E) = 0.65 (A) × 9.76 (D) = 6.34 gal

Total Purge Volume = 32 (gal)

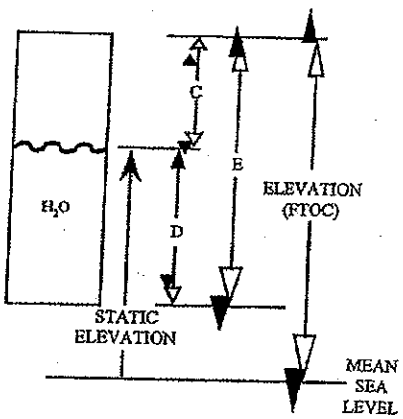

Date	Time	Water Level (FTOC)	Volume Removed (gal)	pH	EC	Temperature F or C	Turbidity/ Sand (ppm)	Comments
10/18/08	14:12	NR	10	6.40	4.291	20.01	18.6	clear
10/18/08	14:41	NR	20	6.46	4.298	20.05	11.1	clear
10/18/08	1459	NR	30	6.40	4.293	20.10	10.1	clear
							10/18/08	

FIGURE 5

GROUNDWATER SAMPLING FORM

00096649
Sheet 1 of 2

Operable Unit/Site ID: LHAAP-29
Project Name/#: Longhorn 117591.0006A100
Weather: clear - 80s
Sampling location ID: 29WW19
Sample ID: 29WW19-102108
Collection Time/Date: 12:20 10/21/08

Pump Installation

Pump installation crew: A. Willmore / R. Wagner
PID/FID reading (well head/background): 0.0
Casing diameter (inches): 4"
Total well Depth (ft. BTOC): 35.32
Initial (pre-installation) DTW/time: 25.59
Final (after pump priming) DTW/time: NA
Free product (circle): LNAPL / DNAPL
Volume of water removed during priming (mL): NA
Discharge tube length (ft.): ~33'
Installation date/beginning time: 10/21/08 10:40
Installation date/completion time: 10/21/08 11:42
Screen Interval (ft. BTOC): 25 to 35
Pump intake depth (ft BTOC): ~30
Post-installation DTW/time: 25.58
Max. sustainable pump rate (mL/min): 100
Appearance of product: NA
Discharge tube diameter (3/8" or 1/4"): 1/4"
Inlet reducer used (Y/N): N

Pneumatic Controller Tuning:
Initial air pressure = H (ft.) X 0.43 = MR psi

	Initial	2	3	4	5	6	7	8	Final
Pressure (psi)									
Refill Setting									
Discharge Setting									
Flow rate (mL/min)									

Purging

Purging/sampling crew: A. Willmore / R. Wagner
Purge date/beginning time: 10-21-08 11:50
Initial (pre-purging) DTW (ft. BTOC): 25.58
Calculated tubing + pump volume: NA
PID/FID reading (well head/background): 0.0
Purge date/completion time: 10-21-08 12:20
Final (post-purging) DTW (ft. BTOC): 25.79
No. of tubing + pump volumes purged: NA

Pneumatic Controller Tuning:
Initial air pressure = H (ft.) X 0.43 = NR psi

	Initial	2	3	4	5	6	7	8	Final
Pressure (psi)	NA								NA
Refill Setting	NA								
Discharge Setting	NR								
Flow rate (mL/min)	100								100

Water Quality Parameter Measurements

Time	DTW (ft. BTOC)	Purge Rate (mL/min)	Cumulative Volume Purged (L)	Temp. (degree C)	Electrical Conductivity (uMhos/cm)	pH	Eh (mv)	DO (mg/L)	Turbidity (NTU)
11:55	25.79	100	0.5	18.90	4,298	6.47	52.9	2.86	223
12:00	25.79	100	1.0	18.93	4,285	6.41	51.5	1.54	185
12:05	25.79	100	1.5	18.86	4,284	6.40	51.0	1.31	16.7
12:10	25.79	100	2.0	18.77	4,276	6.39	~~52.7~~ 48.8	1.07	11.1
12:15	25.79	100	2.5	18.83	4,265	6.39	47.6	1.12	9.4

29WW19
00096650

GROUNDWATER SAMPLING FORM

Sheet 1 of 2

Water Quality Parameter Measurements (continued)

Time	DTW (ft. BTOC)	Purge Rate (mL/min)	Cumulative Volume Purged (L)	Temp. (degree C) ±10%	Electrical Conductivity (uMhos/cm) ±3%	pH ±0.1	Eh (mv) ±10	DO (mg/L) ±10%	Turbidity (NTU) ±10%

10/20

10/24/08

Sampling

Sampling beginning time: 12:20 Sampling completion time: 12:25

Water Quality Parameter Measurements

Time	DTW (ft. BTOC)	Purge Rate (mL/min)	Cumulative Volume Purged (L)	Temp. (degree C)	Electrical Conductivity (uMhos/cm)	pH	Eh (mv)	DO (mg/L)	Turbidity (NTU)
12:20	25.79	100	3.0	18.95	4.260	6.39	46.9	2.90	8.6

Sample Information

Sample ID: 29WW19 - 102108

Sample collection date/time: 10-21-08 12:20

Duplicate sample collected (Y/N): N

Duplicate sample ID: NA

Split sample collected (Y/N): N

Split sample ID: NA

COC No(s):

Requested Analysis	Method	Containers	Requested Analysis	Method	Containers
TAL Metals		1-500mL NDPE			

Comments: Purged & Sampled w/ peristaltic pump
No filter used

Abbreviations: BTOC - Below top of casing; DTW - Depth to water; H - head above pump intake; mL - milliliter; L - Liter

00096651

WELL DEVELOPMENT RECORD

WELL/PIEZOMETER ID 29WW20
SHEET 1 of 1

PROJECT NAME: Longhorn PROJECT NO.: 117591 DATE: 10/7/08

LOCATION: Karnack, Tx DATE INSTALLED: Redevelopment

TOTAL DEPTH (FTOC) 32.5 CASING DIAMETER 4"

METHODS OF DEVELOPMENT

☐ Swabbing ☑ Bailing ☐ Pumping ☐ Describe

Equipment decontaminated prior to development ☐ Yes ☐ NO

Describe 3-part rinse; potable water, alconox + H_2O, DI Water

EQUIPMENT NUMBERS:

pH Meter YSI 6280 EC Meter YSI 6280 Turbidity Meter YSI 6280 Thermometer YSI 6280

CASING VOLUME INFORMATION:

Casing ID (inch)	1.0	1.5	2.0	2.2	3.0	4.0	4.3	5.0	6.0	7.0	8.0
Unit Casing Volume (A) (gal/ft)	0.04	0.09	0.16	0.2	0.37	0.65	0.75	1.0	1.5	2.0	2.6

PURGING INFORMATION:

Measured Well Depth (B) 32.5 ft.

Measured Water Level Depth (C) DRY ft.

Length of Static Water Column (D) (B) 32.5 − (C) DRY = ft.

Casing Water Volume (E) = (A) 0.65 x (D) DRY gal

Total Purge Volume = DRY (gal)

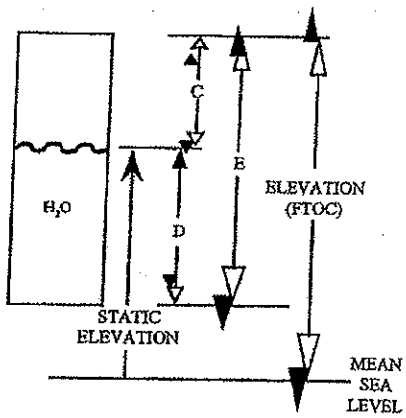

Date	Time	Water Level (FTOC)	Volume Removed (gal)	pH	EC	Temperature F or C	Turbidity/ Sand (ppm)	Comments

DRY

FIGURE 5

GROUNDWATER SAMPLING FORM

00096652
Sheet 1 of 2

Operable Unit/Site ID: ~~LHAAP-29~~ LHAAP-29
Project Name/#: Longhorn
Weather: clear 80s

Sampling location ID: 29WW20
Sample ID: NA
Collection Time/Date: NA 10/21/08

Pump Installation

Pump installation crew: A. Willmore / R. Wagner
PID/FID reading (well head/background): 0.0
Casing diameter (inches): 4"
Total well Depth (ft. BTOC): 32.5
Initial (pre-installation) DTW/time: DRY
Final (after pump priming) DTW/time:
Free product (circle): LNAPL / DNAPL
Volume of water removed during priming (mL): NA
Discharge tube length (ft.): NA

Installation date/beginning time: NA
Installation date/completion time:
Screen Interval (ft. BTOC): 22.5 to 32.5
Pump intake depth (ft BTOC): NA
Post-installation DTW/time: DRY
Max. sustainable pump rate (mL/min):
Appearance of product: NA
Discharge tube diameter (3/8" or 1/4"):
Inlet reducer used (Y/N):

Pneumatic Controller Tuning:
Initial air pressure = H (ft.) X 0.43 = NA psi

	Initial	2	3	4	5	6	7	8	Final
Pressure (psi)									
Refill Setting			DRY						
Discharge Setting									
Flow rate (mL/min)									

Purging

Purging/sampling crew: A. Willmore / R. Wagner
Purge date/beginning time:
Initial (pre-purging) DTW (ft. BTOC): NA
Calculated tubing + pump volume: NA

PID/FID reading (well head/background): NA
Purge date/completion time:
Final (post-purging) DTW (ft. BTOC):
No. of tubing + pump volumes purged:

Pneumatic Controller Tuning:
Initial air pressure = H (ft.) X 0.43 = NA psi

	Initial	2	3	4	5	6	7	8	Final
Pressure (psi)									
Refill Setting			DRY						
Discharge Setting									
Flow rate (mL/min)									

Water Quality Parameter Measurements

Time	DTW (ft. BTOC)	Purge Rate (mL/min)	Cumulative Volume Purged (L)	Temp. (degree C)	Electrical Conductivity (µMhos/cm)	pH	Eh (mv)	DO (mg/L)	Turbidity (NTU)
				DRY					

GROUNDWATER SAMPLING FORM

29
00096653
Sheet 2 of 3

29WW20

Water Quality Parameter Measurements (continued)

Time	DTW (ft. BTOC)	Purge Rate (mL/min)	Cumulative Volume Purged (L)	Temp. (degree C) ±10%	Electrical Conductivity (uMhos/cm) ±3%	pH ±0.1	Eh (mv) ±10	DO (mg/L) ±10%	Turbidity (NTU) ±10%

DRY

10-20

Sampling

Sampling beginning time: NA Sampling completion time: NA

Water Quality Parameter Measurements

Time	DTW (ft. BTOC)	Purge Rate (mL/min)	Cumulative Volume Purged (L)	Temp. (degree C)	Electrical Conductivity (uMhos/cm)	pH	Eh (mv)	DO (mg/L)	Turbidity (NTU)

DRY

Sample Information

Sample ID: DRY
Duplicate sample collected (Y/N): DRY
Split sample collected (Y/N):
COC No(s):

Sample collection date/time: DRY
Duplicate sample ID:
Split sample ID:

Requested Analysis	Method	Containers	Requested Analysis	Method	Containers

DRY

Comments:

DRY

Abbreviations: BTOC - Below top of casing; DTW - Depth to water; H - head above pump intake; mL - milliliter; L - Liter

00096654

WELL DEVELOPMENT RECORD

WELL/PIEZOMETER ID 29MW24
SHEET 1 of 1

PROJECT NAME: Longhorn PROJECT NO.: 117591 DATE: 10/17/08

LOCATION: Karnack, Tx DATE INSTALLED: Redevelopment

TOTAL DEPTH (FTOC) 72. CASING DIAMETER 4"

METHODS OF DEVELOPMENT

☐ Swabbing ☐ Bailing ☑ Pumping ☐ Describe

Equipment decontaminated prior to development ☐ Yes ☐ NO

Describe 3-part rinse; potable water, alconox + H_2O, DI water

EQUIPMENT NUMBERS:

pH Meter YSI 6280 EC Meter YSI 6280 Turbidity Meter YSI 6280 Thermometer YSI 6280

CASING VOLUME INFORMATION:

Casing ID (inch)	1.0	1.5	2.0	2.2	3.0	4.0	4.3	5.0	6.0	7.0	8.0
Unit Casing Volume (A) (gal/ft)	0.04	0.09	0.16	0.2	0.37	0.65	0.75	1.0	1.5	2.0	2.6

PURGING INFORMATION:

Measured Well Depth (B) 72.00 ft.

Measured Water Level Depth (C) 37.38 ft.

Length of Static Water Column (D) 72.00 (B) − 37.38 (C) = 34.62 ft.

Casing Water Volume (E) = 0.65 (A) × 34.62 (D) = 22.5 gal

Total Purge Volume = 120 (gal)

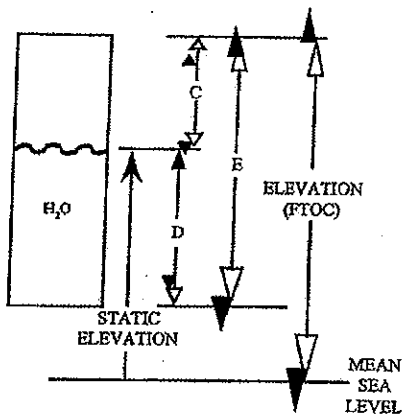

Date	Time	Water Level (FTOC)	Volume Removed (gal)	pH	EC	Temperature F or C	Turbidity/ Sand (ppm)	Comments
10/17/08	09:12	39.13	20	7.51	1.071	18.15	2.6	clear
	09:32	39.62	40	7.53	1.071	18.32	3.4	clear
	09:52	39.62	60	7.52	1.072	18.41	10.3	clear
	10:12	39.62	80	7.51	1.076	18.36	2.1	clear
	10:31	39.62	100	7.51	1.069	18.41	0.0	clear
	10:49	39.62	120	7.51	1.070	18.22	0.0	clear

10/17/08

FIGURE 5

GROUNDWATER SAMPLING FORM

00096655
Sheet 1 of 2

Operable Unit/Site ID: 29WW24-LHAAP-29
Project Name/#: Longhorn / 117591.0006A100
Weather: clear, 40s
Sampling location ID: 29WW24
Sample ID: 29WW24-102708
Collection Time/Date: 09:40 10/27/08

Pump Installation

Pump installation crew: A. Willmore / R. Wagner
PID/FID reading (well head/background): 3.4
Casing diameter (inches): 4"
Total well Depth (ft. BTOC): 72
Initial (pre-installation) DTW/time: 37.33
Final (after pump priming) DTW/time: NA
Free product (circle): LNAPL / DNAPL
Volume of water removed during priming (mL): NA
Discharge tube length (ft.): 70'
Installation date/beginning time: 10.27.08 09:14
Installation date/completion time: 10.27.08 09:18
Screen Interval (ft. BTOC): 62 to 72
Pump intake depth (ft BTOC): 67
Post-installation DTW/time: 37.24
Max. sustainable pump rate (mL/min): ~~300~~ 100
Appearance of product: None
Discharge tube diameter (3/8" or 1/4"): 1/4"
Inlet reducer used (Y/N): N

Pneumatic Controller Tuning:
Initial air pressure = H (ft.) X 0.43 = NR psi

	Initial	2	3	4	5	6	7	8	Final
Pressure (psi)									
Refill Setting				NA					
Discharge Setting									
Flow rate (mL/min)	~~300~~								

Purging

Purging/sampling crew: A. Willmore / R. Wagner
Purge date/beginning time: 10.27.08
Initial (pre-purging) DTW (ft. BTOC): 37.33
Calculated tubing + pump volume: NA
PID/FID reading (well head/background): 3.4
Purge date/completion time: 10.27.08
Final (post-purging) DTW (ft. BTOC): 37.48
No. of tubing + pump volumes purged: NA

Pneumatic Controller Tuning:
Initial air pressure = H (ft.) X 0.43 = NR psi

	Initial	2	3	4	5	6	7	8	Final
Pressure (psi)	38								38
Refill Setting	10								10
Discharge Setting	5								5
Flow rate (mL/min)	100								100

Water Quality Parameter Measurements

Time	DTW (ft. BTOC)	Purge Rate (mL/min)	Cumulative Volume Purged (L)	Temp. (degree C)	Electrical Conductivity (uMhos/cm)	pH	Eh (mv)	DO (mg/L)	Turbidity (NTU)
09:23	37.48	100	0.5	14.99	1.070	7.63	-70.3	3.80	2.0
09:28	37.48	100	1.0	14.97	1.078	7.55	-77.8	3.55	2.2
09:33	37.48	100	1.5	15.44	1.069	7.54	-76.6	3.62	1.8
09:38	37.48	100	2.0	15.57	1.065	7.54	-79.5	3.56	1.5

GROUNDWATER SAMPLING FORM

00096656

Sheet ___ of ___

29WW24

Water Quality Parameter Measurements (continued)

Time	DTW (ft. BTOC)	Purge Rate (mL/min)	Cumulative Volume Purged (L)	Temp. (degree C) ±10%	Electrical Conductivity (uMhos/cm) ±3%	pH ±0.1	Eh (mv) ±10	DO (mg/L) ±10%	Turbidity (NTU) ±10%

10/27/08

10-20

Sampling

Sampling beginning time: 0946 Sampling completion time: 0950

Water Quality Parameter Measurements

Time	DTW (ft. BTOC)	Purge Rate (mL/min)	Cumulative Volume Purged (L)	Temp. (degree C)	Electrical Conductivity (uMhos/cm)	pH	Eh (mv)	DO (mg/L)	Turbidity (NTU)
0938	37.48	100	4	15.62	1.065	7.54	-78.1	3.58	1.4

Sample Information

Sample ID: 29WW24-102708

Sample collection date/time: 10-27-08 09:48

Duplicate sample collected (Y/N): N

Duplicate sample ID: NA

Split sample collected (Y/N): N

Split sample ID: NA

COC No(s): ___

Requested Analysis	Method	Containers	Requested Analysis	Method	Containers
VOCs		3-40mL Voa vials			

Comments:

Abbreviations: BTOC - Below top of casing; DTW - Depth to water; H - head above pump intake; mL - milliliter; L - Liter

00096657

WELL DEVELOPMENT RECORD

WELL/PIEZOMETER ID 29WW25
SHEET 1 of 1

PROJECT NAME: Longhorn PROJECT NO.: 117591 DATE: 10/7/08

LOCATION: Karnack, Tx DATE INSTALLED: Redevelopment

TOTAL DEPTH (FTOC) 35.31 CASING DIAMETER 4"

METHODS OF DEVELOPMENT

☐ Swabbing ☐ Bailing ☐ Pumping ☐ Describe

Equipment decontaminated prior to development ☐ Yes ☐ NO

Describe 3-part rinse; potable water, alconox + H_2O, DI Water

EQUIPMENT NUMBERS:

pH Meter YSI 6280 EC Meter YSI 6280 Turbidity Meter YSI 6280 Thermometer YSI 6280

CASING VOLUME INFORMATION:

Casing ID (inch)	1.0	1.5	2.0	2.2	3.0	4.0	4.3	5.0	6.0	7.0	8.0
Unit Casing Volume (A) (gal/ft)	0.04	0.09	0.16	0.2	0.37	0.65	0.75	1.0	1.5	2.0	2.6

PURGING INFORMATION:

Measured Well Depth (B) 35.31 ft.

Measured Water Level Depth (C) 30.21 ft.

Length of Static Water Column (D) 35.31 (B) − 30.21 (C) = 5.10 ft.

Casing Water Volume (E) = 0.65 (A) × 5.10 (D) = 3.32 gal

Total Purge Volume = 8 (gal)

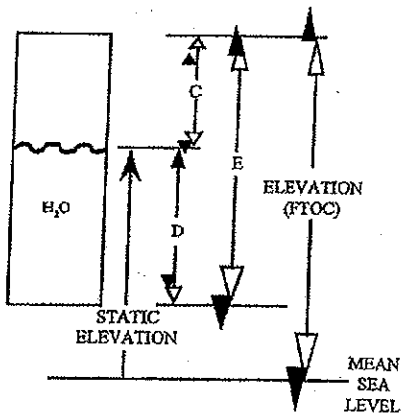

Date	Time	Water Level (FTOC)	Volume Removed (gal)	pH	EC	Temperature F or C	Turbidity/ Sand (ppm)	Comments
10/7/08	0806	NR	2	5.80	3.618	20.41	510.1	Murky
10/7/08	0810	NR	5	5.81	3.624	20.19	301.4	" "
10/7/08	0831	NR	8	5.82	3.622	19.67	296.1	" "
10/7/08								

FIGURE 5

GROUNDWATER SAMPLING FORM

00096658

Sheet 1 of 2

Operable Unit/Site ID: LHAAP-29
Project Name/#: Longhorn / 117591
Weather: Ptly cloudy Low 80s

Sampling location ID: 29WW25
Sample ID: 29WW25-102108
Collection Time/Date: 15:00 10-21-08

Pump Installation

Pump installation crew: A. Willmore / R. Wagner
PID/FID reading (well head/background): ~~0~~ 4.3
Casing diameter (inches): 4"
Total well Depth (ft. BTOC): 35.31
Initial (pre-installation) DTW/time: 30.21
Final (after pump priming) DTW/time: ~~NA~~ NA
Free product (circle): LNAPL / DNAPL
Volume of water removed during priming (mL): NA
Discharge tube length (ft.): ~~30~~ 30'
Pneumatic Controller Tuning:
Initial air pressure = H (ft.) X 0.43 = NA psi

Installation date/beginning time: 10/21/08 13:40
Installation date/completion time: 10/21/08 13:45
Screen Interval (ft. BTOC): 25 to 35
Pump intake depth (ft BTOC): 33
Post-installation DTW/time: 30.21
Max. sustainable pump rate (mL/min): 100
Appearance of product: Reddish water
Discharge tube diameter (3/8" or 1/4"): 1/4
Inlet reducer used (Y/N): N

	Initial	2	3	4	5	6	7	8	Final
Pressure (psi)									
Refill Setting					NA				
Discharge Setting									
Flow rate (mL/min)									

Purging

Purging/sampling crew: A. Willmore / R. Wagner
Purge date/beginning time: 13:45 10-21-08
Initial (pre-purging) DTW (ft. BTOC): 30.21
Calculated tubing + pump volume: NA
Pneumatic Controller Tuning:
Initial air pressure = H (ft.) X 0.43 = NR psi

PID/FID reading (well head/background): 4.3
Purge date/completion time: 10-21-08
Final (post-purging) DTW (ft. BTOC): 30.34
No. of tubing + pump volumes purged: NA

	Initial	2	3	4	5	6	7	8	Final
Pressure (psi)									
Refill Setting	NA								NA
Discharge Setting									
Flow rate (mL/min)	100								100

Water Quality Parameter Measurements

Time	DTW (ft. BTOC)	Purge Rate (mL/min)	Cumulative Volume Purged (L)	Temp. (degree C)	Electrical Conductivity (µMhos/cm)	pH	Eh (mV)	DO (mg/L)	Turbidity (NTU)
13:50	30.34	100	0.5	23.12	3.712	6.83	89.1	2.03	400.1
13:55	30.34	100	1.0	23.16	3.648	5.82	NR	2.04	419.4
14:00	30.34	100	1.5	23.16	3.646	5.82	28.8	1.83	419.5
14:05	30.34	100	2.0	22.93	3.625	5.81	30.3	1.99	399.6
14:25	30.34	100	4.0	22.90	3.610	5.82	39.3	1.49	274.8
14:30	30.34	100	4.5	22.82	3.611	5.82	40.9	1.59	261.6
14:40	30.34	100	5.5	22.63	3.600	5.82	44.7	1.52	239.4

GROUNDWATER SAMPLING FORM

00096659

Sheet 3 of 3

29WW25

Water Quality Parameter Measurements (continued)

Time	DTW (ft. BTOC)	Purge Rate (mL/min)	Cumulative Volume Purged (L)	Temp. (degree C) ±10%	Electrical Conductivity (uMhos/cm) ±3%	pH ±0.1	Eh (mv) ±10	DO (mg/L) ±10%	Turbidity (NTU) ±10%

10/20

10/21/08

Sampling

Sampling beginning time: 16:00 Sampling completion time: 15:05

Water Quality Parameter Measurements

Time	DTW (ft. BTOC)	Purge Rate (mL/min)	Cumulative Volume Purged (L)	Temp. (degree C)	Electrical Conductivity (uMhos/cm)	pH	Eh (mv)	DO (mg/L)	Turbidity (NTU)
16:10	30.34	100	7.5	22.59	3.598	5.83	45.9	1.46	237.1

Sample Information

Sample ID: 29WW25-102108

Sample collection date/time: 10-21-08 15:00

Duplicate sample collected (Y/N): N

Duplicate sample ID: NA

Split sample collected (Y/N): N

Split sample ID: NA

COC No(s):

Requested Analysis	Method	Containers	Requested Analysis	Method	Containers
TAL Metals		1- 500 mL HDPE			

Comments: Water very brown to reddish (Rustic)
Sampled & purged w/ peristaltic pump

Abbreviations: BTOC - Below top of casing; DTW - Depth to water; H - head above pump intake; mL - milliliter; L - Liter

00096660

WELL DEVELOPMENT RECORD

WELL/PIEZOMETER ID 29WW26
SHEET 1 of 1

PROJECT NAME: Longhorn PROJECT NO.: 117591 DATE: 10/14/08

LOCATION: Karnack, Tx DATE INSTALLED: Redevelopment

TOTAL DEPTH (FTOC) 35.30 CASING DIAMETER 4"

METHODS OF DEVELOPMENT

☐ Swabbing ☐ Bailing ☐ Pumping ☐ Describe

Equipment decontaminated prior to development ☐ Yes ☐ NO

Describe 3-part rinse; potable water, alconox + H_2O, DI Water

EQUIPMENT NUMBERS:

pH Meter YSI 6280 EC Meter YSI 6280 Turbidity Meter YSI 6280 Thermometer YSI 6280

CASING VOLUME INFORMATION:

Casing ID (inch)	1.0	1.5	2.0	2.2	3.0	4.0	4.3	5.0	6.0	7.0	8.0
Unit Casing Volume (A) (gal/ft)	0.04	0.09	0.16	0.2	0.37	0.65	0.75	1.0	1.5	2.0	2.6

PURGING INFORMATION:

Measured Well Depth (B) 35.30 ft.

Measured Water Level Depth (C) 32.51 ft.

Length of Static Water Column (D) 35.30 (B) - 32.51 (C) = 2.79 ft.

Casing Water Volume (E) = 0.65 (A) x 2.79 (D) = 1.82 gal

Total Purge Volume = 2 (gal)

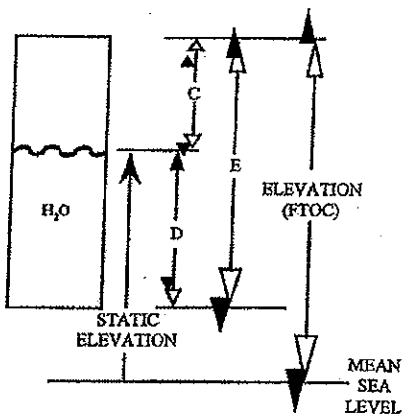

Date	Time	Water Level (FTOC)	Volume Removed (gal)	pH	EC	Temperature F or C	Turbidity/ Sand (ppm)	Comments
10/14/08	08:10	Bailed DRY			NO RECORDINGS			

10/14/08

FIGURE 5

GROUNDWATER SAMPLING FORM

00096661
Sheet 1 of 2

Operable Unit/Site ID: LHAAP-29
Project Name/#: Longhorn / 117591.0006A100
Weather: clear - 60s
Sampling location ID: 29WW26
Sample ID: 29WW26 - 102408
Collection Time/Date: 12:00 10/24/08

Pump Installation

Pump installation crew: A. Willmon / R Wagner
PID/FID reading (well head/background): 0.6
Casing diameter (inches): 4"
Total well Depth (ft. BTOC): 35.30
Initial (pre-installation) DTW/time: 32.51
Final (after pump priming) DTW/time: NA
Free product (circle): LNAPL / DNAPL
Volume of water removed during priming (mL):
Discharge tube length (ft.): 37'
Installation date/beginning time: 10/24/08 10:06
Installation date/completion time: 10/24/08 10:08
Screen Interval (ft. BTOC): 25 to 35
Pump intake depth (ft BTOC): 34.00
Post-installation DTW/time: 32.52
Max. sustainable pump rate (mL/min): 100
Appearance of product: None
Discharge tube diameter (3/8" or 1/4"): 1/4"
Inlet reducer used (Y/N): N

Pneumatic Controller Tuning:
Initial air pressure = H (ft.) X 0.43 = NR psi

	Initial	2	3	4	5	6	7	8	Final
Pressure (psi)									
Refill Setting	6			NA					
Discharge Setting									
Flow rate (mL/min)									

Purging

Purging/sampling crew: A. Willmon / R. Wagner
Purge date/beginning time: 10/24/08 10:10
Initial (pre-purging) DTW (ft. BTOC): 32.53
Calculated tubing + pump volume: NA
PID/FID reading (well head/background): 0.6
Purge date/completion time: 10/24/08 10:
Final (post-purging) DTW (ft. BTOC): 32.75
No. of tubing + pump volumes purged: NR

Pneumatic Controller Tuning:
Initial air pressure = H (ft.) X 0.43 = NR psi

	Initial	2	3	4	5	6	7	8	Final
Pressure (psi)	20								
Refill Setting	10 5								NA
Discharge Setting									
Flow rate (mL/min)	100								100

Water Quality Parameter Measurements

Time	DTW (ft. BTOC)	Purge Rate (mL/min)	Cumulative Volume Purged (L)	Temp. (degree C)	Electrical Conductivity (uMhos/cm)	pH	Eh (mv)	DO (mg/L)	Turbidity (NTU)
10:40	32.75	100	3	16.82	1.683	6.51	-50.4	5.90	815.1
10:45	32.75	100	3.5	16.94	1.665	6.38	-42.9	5.38	702.3
10:50	32.75	100	4.0	16.96	1.659	6.37	-41.5	4.88	646.9
10:55	32.75	100	4.5	17.02	1.642	6.36	-40.5	4.34	551.4
			LET RUN FOR 1 HR						
11:55				18.50	1.329	6.45	-39.1	4.19	20.1

GROUNDWATER SAMPLING FORM

00096662

Sheet __ of __

29MW26

Water Quality Parameter Measurements (continued)

Time	DTW (ft. BTOC)	Purge Rate (mL/min)	Cumulative Volume Purged (L)	Temp. (degree C) ±10%	Electrical Conductivity (uMhos/cm) ±3%	pH ±0.1	Eh (mv) ±10	DO (mg/L) ±10%	Turbidity (NTU) ±10%
		Used filter							

10/23/08

10-20

Sampling

Sampling beginning time: 12:00 Sampling completion time: 12:10

Water Quality Parameter Measurements

Time	DTW (ft. BTOC)	Purge Rate (mL/min)	Cumulative Volume Purged (L)	Temp. (degree C)	Electrical Conductivity (uMhos/cm)	pH	Eh (mv)	DO (mg/L)	Turbidity (NTU)
12:05	32.75	100		18.53	1.385	6.46	-39.2	4.09	19.8

Sample Information

Sample ID: 29MW26-102408

Sample collection date/time: 10/24/08 12:00

Duplicate sample collected (Y/N): N

Duplicate sample ID: NA

Split sample collected (Y/N): N

Split sample ID: NA

COC No(s):

Requested Analysis	Method	Containers	Requested Analysis	Method	Containers

Comments: Purged & Sampled w/ peristaltic pump at first. Used Filter
Switched to bladder pump. Purged 30 mins before 1st reading

Abbreviations: BTOC - Below top of casing; DTW - Depth to water; H - head above pump intake; mL - milliliter; L - Liter

00096663

WELL DEVELOPMENT RECORD

WELL/PIEZOMETER ID 29ww27
SHEET 1 of 1

PROJECT NAME: Longhorn PROJECT NO.: 117591 DATE: 10/14/08

LOCATION: Karnack, Tx DATE INSTALLED: Redevelopment

TOTAL DEPTH (FTOC) 34.50 CASING DIAMETER 4"

METHODS OF DEVELOPMENT

☐ Swabbing ☑ Bailing ☐ Pumping ☐ Describe

Equipment decontaminated prior to development ☐ Yes ☐ NO

Describe 3-part rinse; potable water, alconox + H_2O, DI Water

EQUIPMENT NUMBERS:

pH Meter YSI 6280 EC Meter YSI 6280 Turbidity Meter YSI 6280 Thermometer YSI 6280

CASING VOLUME INFORMATION:

Casing ID (inch)	1.0	1.5	2.0	2.2	3.0	4.0	4.3	5.0	6.0	7.0	8.0
Unit Casing Volume (A) (gal/ft)	0.04	0.09	0.16	0.2	0.37	0.65	0.75	1.0	1.5	2.0	2.6

PURGING INFORMATION:

Measured Well Depth (B) 34.50 ft.

Measured Water Level Depth (C) 29.53 ft.

Length of Static Water Colume (D) 34.50 (B) - 29.53 (C) = 4.97 ft.

Casing Water Volume (E) = 0.65 (A) x 4.97 (D) = 3.23 gal

Total Purge Volume = 9 (gal)

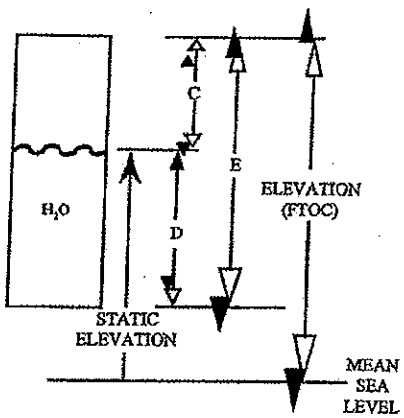

Date	Time	Water Level (FTOC)	Volume Removed (gal)	pH	EC	Temperature F or C	Turbidity/ Sand (ppm)	Comments
10/14/08	09:10	NR	3	6.82	2.512	18.16	200.3	cloudy
10/14/08	09:21	NR	6	6.81	2.513	18.32	193.2	cloudy
10/14/08	09:30	NR	9	6.83	2.509	18.42	415.1	cloudy

10/14/08

FIGURE 5

GROUNDWATER SAMPLING FORM

00096664
Sheet 1 of 2

29WW27

Operable Unit/Site ID: LHAAP-29
Project Name/#: Longhorn / 117591.0006A100
Weather: Dry, Cloudy, 60s

Sampling location ID: 29WW27
Sample ID: 29WW27 - 102308
Collection Time/Date: 17:16 10/23/08

Pump Installation

Pump installation crew: A. Willmore / R. Wagner
PID/FID reading (well head/background): 2.7
Casing diameter (inches): 4"
Total well Depth (ft. BTOC): 34.50
Initial (pre-installation) DTW/time: 29.53
Final (after pump priming) DTW/time: NA
Free product (circle): LNAPL / DNAPL
Volume of water removed during priming (mL): NA
Discharge tube length (ft.): ~~NA~~ 35'

Installation date/beginning time: 10·23·08
Installation date/completion time: 10·23·08
Screen Interval (ft. BTOC): 24.5 to 34.5
Pump intake depth (ft BTOC): ~32'
Post-installation DTW/time: 29.53
Max. sustainable pump rate (mL/min): 100
Appearance of product: None
Discharge tube diameter (3/8" or 1/4"): 1/4"
Inlet reducer used (Y/N): N

Pneumatic Controller Tuning:
Initial air pressure = H (ft.) X 0.43 = NR psi

	Initial	2	3	4	5	6	7	8	Final
Pressure (psi)									
Refill Setting					NA				
Discharge Setting									
Flow rate (mL/min)									

Purging

Purging/sampling crew: A. Willmore / R. Wagner
Purge date/beginning time: 10/23/08 16:11
Initial (pre-purging) DTW (ft. BTOC): 29.53
Calculated tubing + pump volume: NA

PID/FID reading (well head/background): 0.0
Purge date/completion time: 10/23/08
Final (post-purging) DTW (ft. BTOC): 30.21
No. of tubing + pump volumes purged:

Pneumatic Controller Tuning:
Initial air pressure = H (ft.) X 0.43 = NR psi

	Initial	2	3	4	5	6	7	8	Final
Pressure (psi)									
Refill Setting	NR								NR
Discharge Setting									
Flow rate (mL/min)	100								100

Water Quality Parameter Measurements

Time	DTW (ft. BTOC)	Purge Rate (mL/min)	Cumulative Volume Purged (L)	Temp. (degree C)	Electrical Conductivity (uMhos/cm)	pH	Eh (mv)	DO (mg/L)	Turbidity (NTU)
16:16	30.21	100	0.5	18.35	2.510	6.72	6.1	6.10	200.1
16:21	30.21	100	1.0	18.37	2.505	6.79	5.7	5.95	172.1
16:26	30.21	100	1.5	18.35	2.500	6.80	5.5	5.89	145.1
16:31	30.21	100	2.0	18.24	2.484	6.81	5.9	5.26	129.1
16:36	30.21	100	2.5	18.19	2.479	6.83	5.7	3.30	105.3
16:41	30.21	100	3.0	18.19	2.477	6.83	5.4	1.71	77.3
16:46	30.21	100	3.5	18.20	2.476	6.82	5.5	1.86	59.2
17:06	30.21	100	5.5	18.06	2.471	6.81	5.4	1.8	37.7

GROUNDWATER SAMPLING FORM

00096665

Sheet 2 of 2

29WW27

Water Quality Parameter Measurements (continued)

Time	DTW (ft. BTOC)	Purge Rate (mL/min)	Cumulative Volume Purged (L)	Temp. (degree C) ±10%	Electrical Conductivity (uMhos/cm) ±3%	pH ±0.1	Eh (mv) ±10	DO (mg/L) ±10%	Turbidity (NTU) ±10%

10/23/08

10-20

Sampling

Sampling beginning time: 17:10 Sampling completion time: 17:20

Water Quality Parameter Measurements

Time	DTW (ft. BTOC)	Purge Rate (mL/min)	Cumulative Volume Purged (L)	Temp. (degree C)	Electrical Conductivity (uMhos/cm)	pH	Eh (mv)	DO (mg/L)	Turbidity (NTU)
17:20	30.21	100	7.5	18.01	2.471	6.81	5.3	1.79	26.3

Sample Information

Sample ID: 29WW27-102308

Sample collection date/time: 10.23.08 17.10

Duplicate sample collected (Y/N): N

Duplicate sample ID: N/A

Split sample collected (Y/N): N

Split sample ID: N/A

COC No(s):

Requested Analysis	Method	Containers	Requested Analysis	Method	Containers
TAL Metals		1-500 mL HDPE			

Comments: Purged & Sampled w/ peristaltic pump. Used Filter

Abbreviations: BTOC - Below top of casing; DTW - Depth to water; H - head above pump intake; mL - milliliter; L - Liter

00096666

WELL DEVELOPMENT RECORD

WELL/PIEZOMETER ID 29WW29
SHEET 1 of 1

PROJECT NAME: Longhorn PROJECT NO.: 117591 DATE: 10/17/08

LOCATION: Karnack, Tx DATE INSTALLED: Redevelopment

TOTAL DEPTH (FTOC) 40.27 CASING DIAMETER 4"

METHODS OF DEVELOPMENT

☐ Swabbing ☑ Bailing ☐ Pumping ☐ Describe

Equipment decontaminated prior to development ☐ Yes ☐ NO

Describe 3-part rinse; potable water, alconox + H_2O, DI Water

EQUIPMENT NUMBERS:

pH Meter YSI 6280 EC Meter YSI 6280 Turbidity Meter YSI 6280 Thermometer YSI 6280

CASING VOLUME INFORMATION:

Casing ID (inch)	1.0	1.5	2.0	2.2	3.0	4.0	4.3	5.0	6.0	7.0	8.0
Unit Casing Volume (A) (gal/ft)	0.04	0.09	0.16	0.2	0.37	0.65	0.75	1.0	1.5	2.0	2.6

PURGING INFORMATION:

Measured Well Depth (B) 40.27 ft.

Measured Water Level Depth (C) 34.48 ft.

Length of Static Water Column (D) 40.27 (B) − 34.48 (C) = 5.79 ft.

Casing Water Volume (E) = 0.65 (A) × 5.79 (D) = 3.76 gal

Total Purge Volume = 10 (gal)

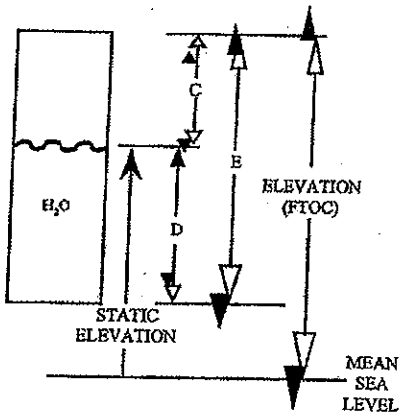

Date	Time	Water Level (FTOC)	Volume Removed (gal)	pH	EC	Temperature F or C	Turbidity/ Sand (ppm)	Comments
10/17/08	07:30	NR	3	6.85	531	16.91	6.4	clear
10/17/08	07:45	NR	6	6.85	523	16.92	3.2	clear
10/17/08	0750	NR	9	6.84	501	16.99	11.3	clear
		Bailed	DRY @ 10 gallons					

FIGURE 5

GROUNDWATER SAMPLING FORM

00096667
Sheet 1 of 2

Operable Unit/Site ID: LHAAP-29
Project Name/#: Longhorn / 117591.0006A100
Weather: ptly cloudy / 100s

Sampling location ID: 29GW029
Sample ID: 29GW029-102308
Collection Time/Date: 14:55 / 10-23-08

Pump Installation

Pump installation crew: A. Willmore / R. Wagner
PID/FID reading (well head/background): 0.0
Casing diameter (inches): 4"
Total well Depth (ft. BTOC): 40.27
Initial (pre-installation) DTW/time: 34.45
Final (after pump priming) DTW/time: NM
Free product (circle): LNAPL / DNAPL
Volume of water removed during priming (mL): NA
Discharge tube length (ft.): NA

Installation date/beginning time: 10-23-08 14:05
Installation date/completion time: 10-23-08 14:07
Screen Interval (ft. BTOC): 30 to 40
Pump intake depth (ft BTOC): 37
Post-installation DTW/time: 34.39 / 14613
Max. sustainable pump rate (mL/min): 100
Appearance of product: None
Discharge tube diameter (3/8" or 1/4"): 1/4"
Inlet reducer used (Y/N): N

Pneumatic Controller Tuning:
Initial air pressure = H (ft.) X 0.43 = _____ psi

	Initial	2	3	4	5	6	7	8	Final
Pressure (psi)									
Refill Setting				NA					
Discharge Setting									
Flow rate (mL/min)									

Purging

Purging/sampling crew: A. Willmore, R. Wagner
Purge date/beginning time: 10-23-08 ~~10/23/08~~ 14:21
Initial (pre-purging) DTW (ft. BTOC): 34.39
Calculated tubing + pump volume: NA

PID/FID reading (well head/background): 0.0
Purge date/completion time: 10-23-08 ~~10/23/08~~
Final (post-purging) DTW (ft. BTOC): 34.68
No. of tubing + pump volumes purged: NA

Pneumatic Controller Tuning:
Initial air pressure = H (ft.) X 0.43 = NA psi

	Initial	2	3	4	5	6	7	8	Final
Pressure (psi)	21								21
Refill Setting	16								16
Discharge Setting	5								5
Flow rate (mL/min)	100								100

Water Quality Parameter Measurements

Time	DTW (ft. BTOC)	Purge Rate (mL/min)	Cumulative Volume Purged (L)	Temp. (degree C)	Electrical Conductivity (uMhos/cm)	pH	Eh (mv)	DO (mg/L)	Turbidity (NTU)
14:26	34.68	100	0.5	18.43	2.740	6.85	100.1	6.97	11.7
14:31	34.68	100	1.0	18.39	2.781	6.84	80.3	4.66	6.2
14:36	34.68	100	1.5	18.43	2.786	6.85	56.5	5.69	4.6
14:41	34.68	100	2.0	18.52	2.789	6.85	58.9	5.61	5.1
14:46	34.68	100	2.5	18.53	2.790	6.85	56.1	5.60	2.9

GROUNDWATER SAMPLING FORM

00096668

Sheet 2 of 2

29WW29

Water Quality Parameter Measurements (continued)

Time	DTW (ft. BTOC)	Purge Rate (mL/min)	Cumulative Volume Purged (L)	Temp. (degree C) ±10%	Electrical Conductivity (uMhos/cm) ±3%	pH ±0.1	Eh (mv) ±10	DO (mg/L) ±10%	Turbidity (NTU) ±10%

10-20

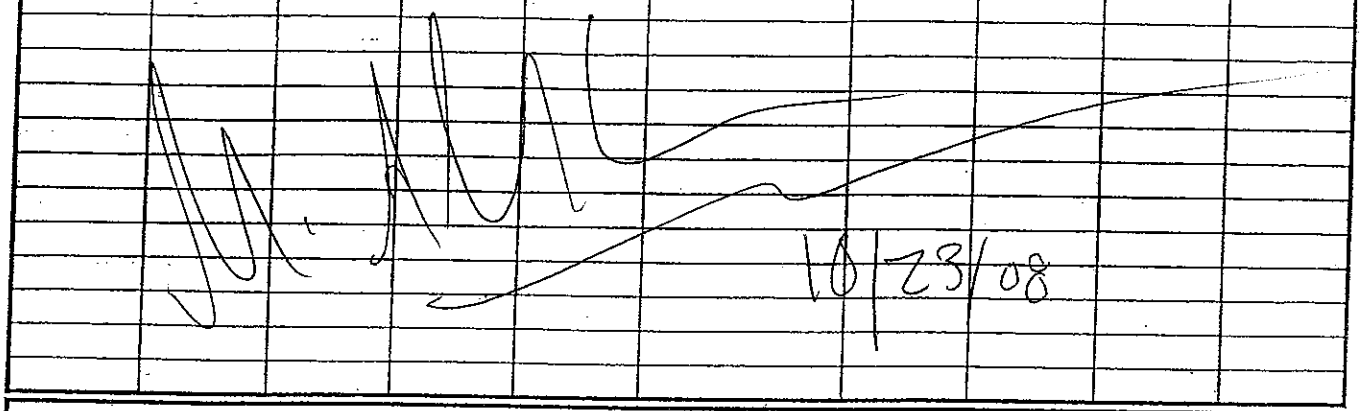

Sampling

Sampling beginning time: 14:55 Sampling completion time: 15:00

Water Quality Parameter Measurements

Time	DTW (ft. BTOC)	Purge Rate (mL/min)	Cumulative Volume Purged (L)	Temp. (degree C)	Electrical Conductivity (uMhos/cm)	pH	Eh (mv)	DO (mg/L)	Turbidity (NTU)
15:00 ~~14:55~~	34.68	100	18.53 → 24.5	switch	2.790	6.85	53.0	5.03	1.3

Sample Information

Sample ID: 29WW29-102808

Sample collection date/time: 10.28.08

Duplicate sample collected (Y/N): N

Duplicate sample ID: NA

Split sample collected (Y/N): N

Split sample ID: NA

COC No(s):

Requested Analysis	Method	Containers	Requested Analysis	Method	Containers
TAL METALS		1- 500 mL HDPE			

Comments: Purged + Sample w/ bladder pump
No filter

Abbreviations: BTOC - Below top of casing; DTW - Depth to water; H - head above pump intake; mL - milliliter; L - Liter

00096669

WELL DEVELOPMENT RECORD

WELL/PIEZOMETER ID 29WW30
SHEET 1 of 1

PROJECT NAME: Longhorn PROJECT NO.: 117591 DATE: 10/16/08

LOCATION: Karnack, Tx DATE INSTALLED: Redevelopment

TOTAL DEPTH (FTOC) 35.31 CASING DIAMETER 4"

METHODS OF DEVELOPMENT

☐ Swabbing ☒ Bailing ☐ Pumping ☐ Describe

Equipment decontaminated prior to development ☐ Yes ☐ NO

Describe 3-part rinse; potable water, alconox + H_2O, DI Water

EQUIPMENT NUMBERS:

pH Meter YSI 6280 EC Meter YSI 6280 Turbidity Meter YSI 6280 Thermometer YSI 6280

CASING VOLUME INFORMATION:

Casing ID (inch)	1.0	1.5	2.0	2.2	3.0	4.0	4.3	5.0	6.0	7.0	8.0
Unit Casing Volume (A) (gal/ft)	0.04	0.09	0.16	0.2	0.37	0.65	0.75	1.0	1.5	2.0	2.6

PURGING INFORMATION:

Measured Well Depth (B) 35.31 ft.

Measured Water Level Depth (C) 31.21 ft.

Length of Static Water Column (D) 35.31 (B) − 31.21 (C) = 4.16 ft.

Casing Water Volume (E) = 0.65 (A) × 4.16 (D) = 2.67 gal

Total Purge Volume = 8 (gal)

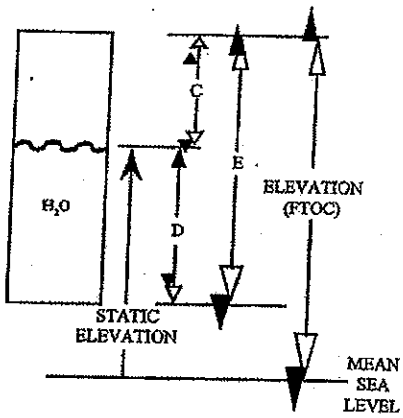

Date	Time	Water Level (FTOC)	Volume Removed (gal)	pH	EC	Temperature F or C	Turbidity/ Sand (ppm)	Comments
10/16/08	09:10	NR	2	6.52	3.210	16.32	62.1	cloudy
10/16/08	09:23	NR	6	6.54	3.209	16.21	47.1	cloudy
10/16/08	09:37	NR	8	6.54	3.211	16.26	55.1	cloudy

10/16/08

FIGURE 5

GROUNDWATER SAMPLING FORM

00096670
Sheet 1 of 2

Operable Unit/Site ID: LHAAP-29
Project Name/#: Longhorn 11759.0006A100
Weather: clear; 60s
Sampling location ID: 29WW30
Sample ID: 29WW30-102308
Collection Time/Date: 11:00 10/23/08

Pump Installation

Pump installation crew: A. Willmore / R. Wagner
PID/FID reading (well head/background): 0.0
Casing diameter (inches): 4"
Total well Depth (ft. BTOC): 35.31
Initial (pre-installation) DTW/time: 31.21
Final (after pump priming) DTW/time: NA
Free product (circle): LNAPL / DNAPL
Volume of water removed during priming (mL): NA
Discharge tube length (ft.): 38
Installation date/beginning time: 10-23-08 10:20
Installation date/completion time: 10-23-08 10:22
Screen Interval (ft. BTOC): ~23 to ~35
Pump intake depth (ft BTOC): ~33'
Post-installation DTW/time: 31.20
Max. sustainable pump rate (mL/min): 100
Appearance of product: None
Discharge tube diameter (3/8" or 1/4"): 1/4"
Inlet reducer used (Y/N): N

Pneumatic Controller Tuning:
Initial air pressure = H (ft.) X 0.43 = NR psi

	Initial	2	3	4	5	6	7	8	Final
Pressure (psi)									
Refill Setting	NA								NA
Discharge Setting									
Flow rate (mL/min)	100								

Purging

Purging/sampling crew: A. Willmore / R. Wagner
Purge date/beginning time: 10-23-08 10:27
Initial (pre-purging) DTW (ft. BTOC): 31.20
Calculated tubing + pump volume: NA
PID/FID reading (well head/background): 0.0
Purge date/completion time: 10-23-08 11:12
Final (post-purging) DTW (ft. BTOC): 31.25
No. of tubing + pump volumes purged: NA

Pneumatic Controller Tuning:
Initial air pressure = H (ft.) X 0.43 = NR psi

	Initial	2	3	4	5	6	7	8	Final
Pressure (psi)									
Refill Setting	NA								NA
Discharge Setting									
Flow rate (mL/min)	100								100

Water Quality Parameter Measurements

Time	DTW (ft. BTOC)	Purge Rate (mL/min)	Cumulative Volume Purged (L)	Temp. (degree C)	Electrical Conductivity (uMhos/cm)	pH	Eh (mv)	DO (mg/L)	Turbidity (NTU)
10:32	31.25	100	0.5	16.42	3.209	6.53	25.9	2.09	135.0
10:37	31.25	100	1.0	16.31	3.208	6.53	30.6	3.76	130.1
10:42	31.25	100	1.5	16.22	3.205	6.53	41.0	3.99	89.1
10:47	31.25	100	2.0	16.06	3.205	6.53	40.9	4.04	82.1
10:52	31.25	100	2.5	16.03	3.205	6.53	43.3	3.57	70.9
10:57	31.25	100	3.0	16.32	3.202	6.53	41.3	3.51	63.3

GROUNDWATER SAMPLING FORM

00096671

Sheet 2 of 2

29WW30

Water Quality Parameter Measurements (continued)

Time	DTW (ft. BTOC)	Purge Rate (mL/min)	Cumulative Volume Purged (L)	Temp. (degree C) ±10%	Electrical Conductivity (uMhos/cm) ±3%	pH ±0.1	Eh (mv) ±10	DO (mg/L) ±10%	Turbidity (NTU) ±10%

10-20

10/23/08

Sampling

Sampling beginning time: ~~11:05~~ 11:00 Sampling completion time: 11:09

Water Quality Parameter Measurements

Time	DTW (ft. BTOC)	Purge Rate (mL/min)	Cumulative Volume Purged (L)	Temp. (degree C)	Electrical Conductivity (uMhos/cm)	pH	Eh (mv)	DO (mg/L)	Turbidity (NTU)
11:12	31.25	100	4.5	16.60	8.202	6.52	51.1	5.02	61.9

Sample Information

Sample ID: 29WW30 - 102308

Duplicate sample collected (Y/N): Y

Split sample collected (Y/N): N

COC No(s):

Sample collection date/time: 10-23-08 11:00

Duplicate sample ID: 29WW30-102308-QA

Split sample ID: NA

Requested Analysis	Method	Containers	Requested Analysis	Method	Containers
TAL METALS		2-500 mL HDPE			

Comments: Sampled & Purged w/ peristaltic pump. Took Field Duplicate
Used filter to sample (10 u)

Abbreviations: BTOC - Below top of casing; DTW - Depth to water; H - head above pump intake; mL - milliliter; L - Liter

00096672

WELL DEVELOPMENT RECORD

WELL/PIEZOMETER ID 24MW(3)
SHEET 1 of 1

PROJECT NAME: Longhorn PROJECT NO.: 117591 DATE: 10/17/08

LOCATION: Karnack, Tx DATE INSTALLED: Redevelopment

TOTAL DEPTH (FTOC) 42.85 CASING DIAMETER 4"

METHODS OF DEVELOPMENT

☐ Swabbing ☐ Bailing ☑ Pumping ☐ Describe

Equipment decontaminated prior to development ☐ Yes ☐ NO

Describe 3-part rinse; potable water, alconox + H_2O, DI water

EQUIPMENT NUMBERS:

pH Meter YSI 6280 EC Meter YSI 6280 Turbidity Meter YSI 6280 Thermometer YSI 6280

CASING VOLUME INFORMATION:

Casing ID (inch)	1.0	1.5	2.0	2.2	3.0	4.0	4.3	5.0	6.0	7.0	8.0
Unit Casing Volume (A) (gal/ft)	0.04	0.09	0.16	0.2	0.37	0.65	0.75	1.0	1.5	2.0	2.6

PURGING INFORMATION:

Measured Well Depth (B) 42.85 ft.

Measured Water Level Depth (C) 28.45 ft.

Length of Static Water Column (D) 42.85 (B) - 28.45 (C) = 14.40 ft.

Casing Water Volume (E) = 0.65 (A) x 14.40 (D) = 9.36 gal

Total Purge Volume = 40 (gal)

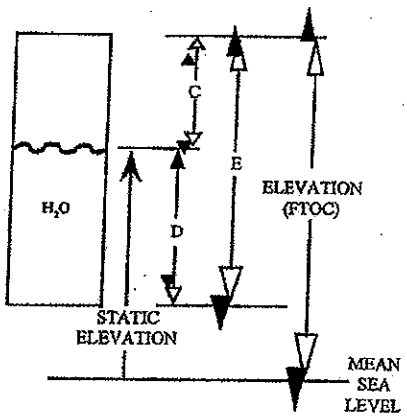

Date	Time	Water Level (FTOC)	Volume Removed (gal)	pH	EC	Temperature F or C	Turbidity/ Sand (ppm)	Comments
10/17/08	18:01	NR	10	6.82	1.772	19.14	0.0	clear
10/17/08	18:31	NR	20	6.81	1.722	19.18	0.0	clear
10/17/08	18:41	NR	30	6.81	1.727	19.21	0.0	clear
		Went	dry	@	40'			
							10/17/08	

FIGURE 5

GROUNDWATER SAMPLING FORM

00096673
Sheet 1 of 2

Operable Unit/Site ID: 4HAAP-29
Project Name/#: Longhorn / 117591.0006A108
Weather: clear; Hi 60s
Sampling location ID: 29WW33
Sample ID: 29WW33-102508
Collection Time/Date: 12:30 / 10-25-08

Pump Installation

Pump installation crew: A. Willmore / R. Wagner
PID/FID reading (well head/background): 0.0
Casing diameter (inches): 4"
Total well Depth (ft. BTOC): 42.85
Initial (pre-installation) DTW/time: 28.45
Final (after pump priming) DTW/time: NA
Free product (circle): LNAPL / DNAPL
Volume of water removed during priming (mL): NA
Discharge tube length (ft.): 40'
Pneumatic Controller Tuning:
Initial air pressure = H (ft.) X 0.43 = NR psi

Installation date/beginning time: 10-25-08 1545
Installation date/completion time: 10-25-08 1547
Screen Interval (ft. BTOC): 32.5 to 42.5
Pump intake depth (ft BTOC): 37'
Post-installation DTW/time: 28.45
Max. sustainable pump rate (mL/min): 160
Appearance of product: None
Discharge tube diameter (3/8" or 1/4"): 1/4"
Inlet reducer used (Y/N): N

	Initial	2	3	4	5	6	7	8	Final
Pressure (psi)									
Refill Setting									
Discharge Setting				NA					
Flow rate (mL/min)									

Purging

Purging/sampling crew: A. Willmore / R. Wagner
Purge date/beginning time: 10.25.08 1150
Initial (pre-purging) DTW (ft. BTOC): 28.45
Calculated tubing + pump volume: NA
Pneumatic Controller Tuning:
Initial air pressure = H (ft.) X 0.43 = NR psi

PID/FID reading (well head/background): 0.0
Purge date/completion time: 10/25/08
Final (post-purging) DTW (ft. BTOC): 28.86
No. of tubing + pump volumes purged: NR

	Initial	2	3	4	5	6	7	8	Final
Pressure (psi)									
Refill Setting	NA								NA
Discharge Setting									
Flow rate (mL/min)	100								100

Water Quality Parameter Measurements

Time	DTW (ft. BTOC)	Purge Rate (mL/min)	Cumulative Volume Purged (L)	Temp. (degree C)	Electrical Conductivity (uMhos/cm)	pH	Eh (mv)	DO (mg/L)	Turbidity (NTU)
11:55	28.86	100	0.5	20.10	1.719	6.87	2.0	5.29	0.0
11:00	28.86	100	1.0	20.15	1.700	6.77	2.0	5.29	0.0
12:05	28.86	100	1.5	20.21	1.723	6.87	2.0	5.28	0.0
12:10	28.86	100	2.0	20.20	1.722	6.81	2.9	5.24	0.0
12:15	28.86	100	2.5	20.24	1.722	6.81	2.8	5.21	0.0

GROUNDWATER SAMPLING FORM

00096674

Sheet 3 of 6

29WW33

Water Quality Parameter Measurements (continued)

Time	DTW (ft. BTOC)	Purge Rate (mL/min)	Cumulative Volume Purged (L)	Temp. (degree C) ±10%	Electrical Conductivity (uMhos/cm) ±3%	pH ±0.1	Eh (mv) ±10	DO (mg/L) ±10%	Turbidity (NTU) ±10%

10/25/08

10-20

Sampling

Sampling beginning time: 10:30

Sampling completion time: 12:40

Water Quality Parameter Measurements

Time	DTW (ft. BTOC)	Purge Rate (mL/min)	Cumulative Volume Purged (L)	Temp. (degree C)	Electrical Conductivity (uMhos/cm)	pH	Eh (mv)	DO (mg/L)	Turbidity (NTU)
12:45	28.86	100	5.5	20.21	1.722	6.81	.29	5.21	0.0

Sample Information

Sample ID: 29WW33-102505

Duplicate sample collected (Y/N): N

Split sample collected (Y/N): N

COC No(s):

Sample collection date/time: 10.25.08 1230

Duplicate sample ID: NA

Split sample ID: NA

Requested Analysis	Method	Containers	Requested Analysis	Method	Containers
TAL METALS		1-500mL HDPE			

Comments: Purged & Sampled w/ peristaltic pum

Abbreviations: BTOC - Below top of casing; DTW - Depth to water; H - head above pump intake; mL - milliliter; L - Liter

00096675

WELL DEVELOPMENT RECORD

WELL/PIEZOMETER ID 24WW35
SHEET 1 of 1

PROJECT NAME: Longhorn PROJECT NO.: 117591 DATE: 10/19/08

LOCATION: Karnack, Tx DATE INSTALLED: Redevelopment

TOTAL DEPTH (FTOC) 98 CASING DIAMETER 4"

METHODS OF DEVELOPMENT

☐ Swabbing ☐ Bailing ☑ Pumping ☐ Describe

Equipment decontaminated prior to development ☐ Yes ☐ NO

Describe 3-part rinse; potable water, alconox + H_2O, DI Water

EQUIPMENT NUMBERS:

pH Meter YSI 6280 EC Meter YSI 6280 Turbidity Meter YSI 6280 Thermometer YSI 6280

CASING VOLUME INFORMATION:

Casing ID (inch)	1.0	1.5	2.0	2.2	3.0	4.0	4.3	5.0	6.0	7.0	8.0
Unit Casing Volume (A) (gal/ft)	0.04	0.09	0.16	0.2	0.37	0.65	0.75	1.0	1.5	2.0	2.6

PURGING INFORMATION:

Measured Well Depth (B) 98 ft.

Measured Water Level Depth (C) 42.47 ft.

Length of Static Water Column (D) 98 (B) - 42.47 (C) = 55.53 ft.

Casing Water Volume (E) = 0.65 (A) x 55.53 (D) = 36.1 gal

Total Purge Volume = 185 (gal)

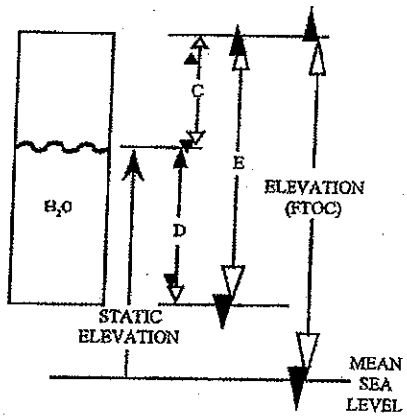

Date	Time	Water Level (FTOC)	Volume Removed (gal)	pH	EC	Temperature F or C	Turbidity/ Sand (ppm)	Comments
10/19/08	0806	44.10	40	7.48	0.857	17.21	7.0	clear
10/19/08	0849	45.62	80	7.41	0.853	17.28	6.1	clear
10/19/08	09:22	47.4	120	7.41	0.853	17.31	5.2	clear
10/19/08	09:51	49.32	160	7.41	0.852	17.41	4.1	clear
10/19/08	10:31	49.91	185	7.42	0.851	17.46	3.0	clear

10/19/08

FIGURE 5

GROUNDWATER SAMPLING FORM

00096676
Sheet 1 of 2

29WW35

Operable Unit/Site ID: LHAAP-29
Project Name/#: Longhorn / 117591
Weather: clear; 40s

Sampling location ID: 29WW35
Sample ID: 29WW35-102708
Collection Time/Date: 10:30 10.27.08

Pump Installation

Pump installation crew: A. Willmore / R. Wagner
PID/FID reading (well head/background): 1.2
Casing diameter (inches): 4"
Total well Depth (ft. BTOC): 98
Initial (pre-installation) DTW/time: 42.45
Final (after pump priming) DTW/time:
Free product (circle): LNAPL / DNAPL
Volume of water removed during priming (mL):
Discharge tube length (ft.):

Installation date/beginning time: 10.27.08 10:06
Installation date/completion time: 10.27.08 10:04
Screen Interval (ft. BTOC): 88 to 98
Pump intake depth (ft BTOC): 93'
Post-installation DTW/time: 42.26
Max. sustainable pump rate (mL/min): 100
Appearance of product: None
Discharge tube diameter (3/8" or 1/4"): 1/4"
Inlet reducer used (Y/N): N

Pneumatic Controller Tuning:
Initial air pressure = H (ft.) X 0.43 = _____ psi

	Initial	2	3	4	5	6	7	8	Final
Pressure (psi)									
Refill Setting									
Discharge Setting				NA					
Flow rate (mL/min)									

Purging

Purging/sampling crew: A. Willmore / R. Wagner
Purge date/beginning time: 10.27.08 10:04
Initial (pre-purging) DTW (ft. BTOC): ~~42.45~~ 42.45
Calculated tubing + pump volume: NA

PID/FID reading (well head/background): 1.2
Purge date/completion time: 10-27-08 10:45
Final (post-purging) DTW (ft. BTOC): 42.63
No. of tubing + pump volumes purged: NA

Pneumatic Controller Tuning:
Initial air pressure = H (ft.) X 0.43 = NA psi

	Initial	2	3	4	5	6	7	8	Final
Pressure (psi)	65								65
Refill Setting	10								10
Discharge Setting	5								5
Flow rate (mL/min)	100								100

Water Quality Parameter Measurements

Time	DTW (ft. BTOC)	Purge Rate (mL/min)	Cumulative Volume Purged (L)	Temp. (degree C)	Electrical Conductivity (µMhos/cm)	pH	Eh (mv)	DO (mg/L)	Turbidity (NTU)
10:09	42.63	100	~~0~~ 0.5	17.21	0.858	7.51	-80.3	2.35	4.4
10:14	42.63	100	1.0	17.23	0.858	7.47	-82.4	2.14	3.0
10:14	42.63	100	1.5	17.81	0.859	7.45	-83.3	2.10	3.3
10:24	42.63	100	2.5	17.82	0.859	7.43	-80.1	2.03	3.4

GROUNDWATER SAMPLING FORM

00096677

Sheet 2 of 2

29WW35

Water Quality Parameter Measurements (continued)

Time	DTW (ft. BTOC)	Purge Rate (mL/min)	Cumulative Volume Purged (L)	Temp. (degree C) ±10%	Electrical Conductivity (uMhos/cm) ±3%	pH ±0.1	Eh (mv) ±10	DO (mg/L) ±10%	Turbidity (NTU) ±10%

10/20

10/27/08

Sampling

Sampling beginning time: 10:38 Sampling completion time: 10:46

Water Quality Parameter Measurements

Time	DTW (ft. BTOC)	Purge Rate (mL/min)	Cumulative Volume Purged (L)	Temp. (degree C)	Electrical Conductivity (uMhos/cm)	pH	Eh (mv)	DO (mg/L)	Turbidity (NTU)
10:44	42.63	100	4.5	17.84	0.859	7.44	-82.1	2.07	2.8

Sample Information

Sample ID: 29WW35-102708

Sample collection date/time: 10.27.08

Duplicate sample collected (Y/N): N

Duplicate sample ID: NA

Split sample collected (Y/N): N

Split sample ID: NA

COC No(s): NR

Requested Analysis	Method	Containers	Requested Analysis	Method	Containers
VOCs		3-40 mL Voa Vials			

Comments: Purged & Sampled w/ bladder pump. No filter used.

Abbreviations: BTOC - Below top of casing; DTW - Depth to water; H - head above pump intake; mL - milliliter; L - Liter

00096678

GROUNDWATER SAMPLING FORM

Sheet 1 of 2

Operable Unit/Site ID: LHAAP - Area 29
Project Name/#: 117591
Weather: 65° - 70° F

Sampling location ID: 29 GW 01
Sample ID: 29 GW 01 012109
Collection Time/Date: 01 21 09 / 1351

Pump Installation

Pump installation crew: M. Martinez / T. Alexander
PID/FID reading (well head/background): NA
Casing diameter (inches): 4"
Total well Depth (ft. BTOC): 34.50
Initial (pre-installation) DTW/time: 29.90 / 1305
Final (after pump priming) DTW/time:
Free product (circle): ~~LNAPL~~ / ~~DNAPL~~
Volume of water removed during priming (mL): NA
Discharge tube length (ft.): NA

Installation date/beginning time: 01-21-09 /
Installation date/completion time: 01-21-09 /
Screen Interval (ft. BTOC): 24.5 to 34.5
Pump intake depth (ft BTOC): 33.5
Post-installation DTW/time: 29.35 / 1340
Max. sustainable pump rate (mL/min): NA
Appearance of product: NA
Discharge tube diameter (3/8" or 1/4"): 1/4"
Inlet reducer used (Y/N): N

Pneumatic Controller Tuning:
Initial air pressure = H (ft.) X 0.43 = _____ psi

	Initial	2	3	4	5	6	7	8	Final
Pressure (psi)									
Refill Setting									
Discharge Setting									
Flow rate (mL/min)									

Purging

Purging/sampling crew: M. Martinez / T. Alexander
Purge date/beginning time: 01-21-09 / 1311
Initial (pre-purging) DTW (ft. BTOC): 29.80
Calculated tubing + pump volume: NA

PID/FID reading (well head/background): NA
Purge date/completion time: 01-21-09 1355
Final (post-purging) DTW (ft. BTOC): 30.80
No. of tubing + pump volumes purged: —

Pneumatic Controller Tuning:
Initial air pressure = H (ft.) X 0.43 = _____ psi

	Initial	2	3	4	5	6	7	8	Final
Pressure (psi)	28								28
Refill Setting	10								10
Discharge Setting	5								5
Flow rate (mL/min)	220								220

Water Quality Parameter Measurements

Time	DTW (ft. BTOC)	Purge Rate (mL/min)	Cumulative Volume Purged (L)	Temp. (degree C)	Electrical Conductivity (uMhos/cm)	pH	Eh (mv)	DO (mg/L)	Turbidity (NTU)
1315	30.15	220	1.0	18.09	2.767	6.47	57.9	1.10	0.0
1325	30.26	220	3.2	17.93	2.766	6.36	64.5	0.51	0.0
1330	30.40	220	4.3	17.90	2.766	6.35	67.5	0.54	0.0
1335	30.47	220	5.4	17.89	2.772	6.36	69.4	0.69	0.0
1340	30.55	220	6.5	17.90	2.779	6.36	70.6	0.75	0.0
1345	30.63	220	7.6	17.90	2.783	6.36	71.4	0.81	0.0
1350	30.70	220	8.7	17.91	2.785	6.37	70.8	0.80	0.0
1351	Sample								

00096679

Shaw

GROUNDWATER SAMPLING FORM

Water Quality Parameter Measurements (continued)

Time	DTW (ft. BTOC)	Purge Rate (mL/min)	Cumulative Volume Purged (L)	Temp. (degree C)	Electrical Conductivity (uMhos/cm)	pH	Eh (mv)	DO (mg/L)	Turbidity (NTU)
1400	(Finish w/		29 cw 01)						

Sampling

Sampling beginning time: 1351 Sampling completion time: 1353

Water Quality Parameter Measurements

Time	DTW (ft. BTOC)	Purge Rate (mL/min)	Cumulative Volume Purged (L)	Temp. (degree C)	Electrical Conductivity (uMhos/cm)	pH	Eh (mv)	DO (mg/L)	Turbidity (NTU)
1355	30.80	220		17.90	2.786	6.36	71.3	0.81	0.0

Sample Information

Sample ID: 29 CW 01 Sample collection date/time: 01-21-09

Duplicate sample collected (Y/N): NO Duplicate sample ID: NA

Split sample collected (Y/N): NO Split sample ID: NA

COC No(s):

Requested Analysis	Method	Containers	Requested Analysis	Method	Containers
Chromium		1x500 mL HDPE			

Comments:

Sample is Transparent NO signs of sediments

Abbreviations: BTOC - Below top of casing; DTW - Depth to water; H - head above pump intake; mL - milliliter; L - Liter

00096680

GROUNDWATER SAMPLING FORM

Sheet 1 of 2

Operable Unit/Site ID: LLAAP - Area 29
Project Name/#: 117591
Weather: 65° - 70°F

Sampling location ID: 29 GW 25
Sample ID: 29 GW 25 012909
Collection Time/Date: 012109 / 1506

Pump Installation

Pump installation crew: M. Mastine / T. Alexander
PID/FID reading (well head/background): NA
Casing diameter (inches): 4"
Total well Depth (ft. BTOC): 36.00'
Initial (pre-installation) DTW/time: 30.10
Final (after pump priming) DTW/time:
Free product (circle): LNAPL / DNAPL
Volume of water removed during priming (mL): —
Discharge tube length (ft.): —

Installation date/beginning time: 012109 /
Installation date/completion time: 012109 /
Screen Interval (ft. BTOC): 25 to 35'
Pump intake depth (ft BTOC): 34'
Post-installation DTW/time: 30.00' / 1420
Max. sustainable pump rate (mL/min): —
Appearance of product: NA
Discharge tube diameter (3/8" or 1/4"): 1/4"
Inlet reducer used (Y/N): NO

Pneumatic Controller Tuning:
Initial air pressure = H (ft.) X 0.43 = _____ psi

	Initial	2	3	4	5	6	7	8	Final
Pressure (psi)									
Refill Setting									
Discharge Setting									
Flow rate (mL/min)									

Purging

Purging/sampling crew: M. Mastine / T. Alexander
Purge date/beginning time: 012109 /
Initial (pre-purging) DTW (ft. BTOC):
Calculated tubing + pump volume: NA

PID/FID reading (well head/background): NA
Purge date/completion time: 012109 / 1510
Final (post-purging) DTW (ft. BTOC): 31.30
No. of tubing + pump volumes purged: —

Pneumatic Controller Tuning:
Initial air pressure = H (ft.) X 0.43 = _____ psi

	Initial	2	3	4	5	6	7	8	Final
Pressure (psi)	25								25
Refill Setting	11.5								11.5
Discharge Setting	3.5								3.5
Flow rate (mL/min)	115								115

Water Quality Parameter Measurements

Time	DTW (ft. BTOC)	Purge Rate (mL/min)	Cumulative Volume Purged (L)	Temp. (degree C)	Electrical Conductivity (uMhos/cm)	pH	Eh (mv)	DO (mg/L)	Turbidity (NTU)
1430	30.29	115	1.0	17.65	3.518	5.56	55.1	1.83	76.7
1440	30.56	115	2.1	17.54	3.546	5.49	61.5	0.67	40.8
1445	30.62	115	2.725	17.50	3.547	5.49	63.9	0.64	34.2
1450	30.71	115	3.30	17.49	3.549	5.48	64.8	0.62	27.1
1455	30.79	115	3.875	17.47	3.549	5.48	65.3	0.61	23.7
1500	30.92	115	4.45	17.42	3.553	5.47	69.6	0.55	24.5
1505	30.99	115	5.025	17.40	3.556	5.48	73.0	0.57	42.1
1506	Sample (used Filter)								

00096681

GROUNDWATER SAMPLING FORM

Sheet 2 of 2

Water Quality Parameter Measurements (continued)

Time	DTW (ft. BTOC)	Purge Rate (mL/min)	Cumulative Volume Purged (L)	Temp. (degree C)	Electrical Conductivity (uMhos/cm)	pH	Eh (mv)	DO (mg/L)	Turbidity (NTU)
1545	(Finish w		24 cw 25)						

Sampling

Sampling beginning time: 1506 Sampling completion time: 1525

Water Quality Parameter Measurements

Time	DTW (ft. BTOC)	Purge Rate (mL/min)	Cumulative Volume Purged (L)	Temp. (degree C)	Electrical Conductivity (uMhos/cm)	pH	Eh (mv)	DO (mg/L)	Turbidity (NTU)
1530	31.30	115		17.38	3555	5.47	70.8	0.61	30.7

Sample Information

Sample ID: 29 CW 25 Sample collection date/time: 01-21-09 / 1506

Duplicate sample collected (Y/N): NO Duplicate sample ID: NA

Split sample collected (Y/N): NO Split sample ID: NA

COC No(s):

Requested Analysis	Method	Containers	Requested Analysis	Method	Containers
Chromium		1x 500mL HDPE			

Comments: Sample was Filtered.

Sample has a greenish yellow tint.

Abbreviations: BTOC - Below top of casing; DTW - Depth to water; H - head above pump intake; mL - milliliter; L - Liter

00096682

GROUNDWATER SAMPLING FORM

Sheet 1 of 2

Operable Unit/Site ID: LHAAP-29
Project Name/#: 117591
Weather: 35°-40°F

Sampling location ID: 29GW29
Sample ID: 29GW29 012109
Collection Time/Date: 01-21-09 / 0938

Pump Installation

Pump installation crew: M. Montano / T. Alexander
PID/FID reading (well head/background): N/A
Casing diameter (inches): 4"
Total well Depth (ft. BTOC): 40.5
Initial (pre-installation) DTW/time: 34.51'
Final (after pump priming) DTW/time:
Free product (circle): LNAPL / DNAPL
Volume of water removed during priming (mL): —
Discharge tube length (ft.): —

Installation date/beginning time: 01-21-09 / 0830
Installation date/completion time: 01-21-09 / 0832
Screen Interval (ft. BTOC): 29 to 39
Pump intake depth (ft BTOC): 38'
Post-installation DTW/time: 34.45' / 0832
Max. sustainable pump rate (mL/min): —
Appearance of product: NA
Discharge tube diameter (~~3/8"~~ or (1/4")): 1/4"
Inlet reducer used (Y/(N)): NO

Pneumatic Controller Tuning:

Initial air pressure = H (ft.) X 0.43 = _____ psi

	Initial	2	3	4	5	6	7	8	Final
Pressure (psi)									
Refill Setting									
Discharge Setting									
Flow rate (mL/min)									

Purging

Purging/sampling crew: Montano / T. Alexander
Purge date/beginning time: 01-21-09 /
Initial (pre-purging) DTW (ft. BTOC): 34.45
Calculated tubing + pump volume: NA

PID/FID reading (well head/background): 0/0
Purge date/completion time: 01-21-09 / 0948
Final (post-purging) DTW (ft. BTOC): 35.69
No. of tubing + pump volumes purged: —

Pneumatic Controller Tuning:

Initial air pressure = H (ft.) X 0.43 = _____ psi

	Initial	2	3	4	5	6	7	8	Final
Pressure (psi)	30	25							25
Refill Setting	9	11							11
Discharge Setting	6	4							4
Flow rate (mL/min)	250	130							130

Water Quality Parameter Measurements

Time	DTW (ft. BTOC)	Purge Rate (mL/min)	Cumulative Volume Purged (L)	Temp. (degree C)	Electrical Conductivity (uMhos/cm)	pH	Eh (mv)	DO (mg/L)	Turbidity (NTU)
0947	35.07	250	~~1.5~~ 2.5	15.03	2.680	6.17	0.0	1.15	60.0
0952	35.23	130	3.0	16.24	2.705	6.46	7.2	0.50	24.5
0902	35.30	130	3.65	15.90	2.771	6.45	11.5	0.49	22.1
0907	35.34	130	4.30	15.51	2.770	6.45	12.2	0.49	21.0
0912	35.37	130	4.95	15.39	2.771	6.45	13.5	0.55	17.6
0917	35.42	130	5.60	15.37	2.772	6.45	16.0	0.60	15.1
0922	35.47	130	6.25	15.36	2.772	6.47	16.9	0.67	13.8
0927	35.52	130	6.90	15.40	2.770	6.47	18.8	0.72	9.7

00096683

GROUNDWATER SAMPLING FORM

Sheet 2 of 2

Shaw

Water Quality Parameter Measurements (continued)

Time	DTW (ft. BTOC)	Purge Rate (mL/min)	Cumulative Volume Purged (L)	Temp. (degree C)	Electrical Conductivity (uMhos/cm)	pH	Eh (mv)	DO (mg/L)	Turbidity (NTU)
0932	35.00	130	7.55	15.41	2.774	6.48	19.1	0.70	8.8
0937	35.02	130	8.20	15.44	2.774	6.48	19.8	0.74	6.3
0938	Sample								
(1000	First G	@	29 ww 29)						

Sampling

Sampling beginning time: 0938 Sampling completion time: 0942

Water Quality Parameter Measurements

Time	DTW (ft. BTOC)	Purge Rate (mL/min)	Cumulative Volume Purged (L)	Temp. (degree C)	Electrical Conductivity (uMhos/cm)	pH	Eh (mv)	DO (mg/L)	Turbidity (NTU)
0949	35.04	130		15.40	2.774	6.49	31.5	0.75	4.9

Sample Information

Sample ID: 29 ww 29 012109
Sample collection date/time: 012109 / 0938
Duplicate sample collected (Y/N): NO
Duplicate sample ID: NA
Split sample collected (Y/N): NO
Split sample ID: NA
COC No(s):

Requested Analysis	Method	Containers	Requested Analysis	Method	Containers
Chromium		1 x 500mL HDPE			

Comments:

Sample Transparent NO sign of Sediments

Abbreviations: BTOC - Below top of casing; DTW - Depth to water; H - head above pump intake; mL - milliliter; L - Liter

00096684

GROUNDWATER SAMPLING FORM

Sheet 1 of 2

Operable Unit/Site ID: LHAAP-Site 29
Project Name/#: 117591
Weather: ~ 50°-55° F

Sampling location ID: 29GW30
Sample ID: 29GW30 012109
Collection Time/Date: 01-21-09 / 1116

Pump Installation

Pump installation crew: M. Martinez
PID/FID reading (well head/background): N/A
Casing diameter (inches): 4"
Total well Depth (ft. BTOC): 35.30
Initial (pre-installation) DTW/time: 31.25 / 1020
Final (after pump priming) DTW/time:
Free product (circle): LNAPL / DNAPL
Volume of water removed during priming (mL): —
Discharge tube length (ft.): —

Installation date/beginning time: 01-21-09 - 1026
Installation date/completion time: 01-21-09 - 1028
Screen Interval (ft. BTOC): 25 to 35
Pump intake depth (ft BTOC): 34
Post-installation DTW/time: 31.11 / 1030
Max. sustainable pump rate (mL/min): —
Appearance of product: None
Discharge tube diameter (3/8" or (1/4")): 1/4"
Inlet reducer used (Y/N): N

Pneumatic Controller Tuning:
Initial air pressure = H (ft.) X 0.43 = _____ psi

	Initial	2	3	4	5	6	7	8	Final
Pressure (psi)									
Refill Setting									
Discharge Setting									
Flow rate (mL/min)					100				

Purging

Purging/sampling crew: M. Martinez
Purge date/beginning time: 01-21-09 / 1036
Initial (pre-purging) DTW (ft. BTOC): 31.11 / 1030
Calculated tubing + pump volume: NA

PID/FID reading (well head/background): N/A
Purge date/completion time: 01-21-09 / 1120
Final (post-purging) DTW (ft. BTOC): 32.95 /
No. of tubing + pump volumes purged: —

Pneumatic Controller Tuning:
Initial air pressure = H (ft.) X 0.43 = _____ psi

	Initial	2	3	4	5	6	7	8	Final
Pressure (psi)	30								30
Refill Setting	10								10
Discharge Setting	5								5
Flow rate (mL/min)	230								230

Water Quality Parameter Measurements

Time	DTW (ft. BTOC)	Purge Rate (mL/min)	Cumulative Volume Purged (L)	Temp. (degree C)	Electrical Conductivity (uMhos/cm)	pH	Eh (mv)	DO (mg/L)	Turbidity (NTU)
1040	31.55	230	0.75	18.14	3.209	6.29	41.3	0.69	11.1
1050	31.85	230	3.05	17.81	3.223	6.25	42.9	0.56	0.0
1055	32.05	230	4.20	17.70	3.216	6.25	44.8	0.63	0.0
1100	32.29	230	5.35	17.73	3.214	6.25	47.7	0.82	0.0
1105	32.45	230	6.50	17.75	3.209	6.26	52.2	1.02	0.0
1110	32.55	230	7.65	17.83	3.202	6.26	52.5	1.05	0.0
1115	32.65	230	8.8	17.85	3.205	6.26	52.0	1.08	0.0
1116	Sample								

00096685

GROUNDWATER SAMPLING FORM

Sheet 2 of 2

Water Quality Parameter Measurements (continued)

Time	DTW (ft. BTOC)	Purge Rate (mL/min)	Cumulative Volume Purged (L)	Temp. (degree C)	Electrical Conductivity (uMhos/cm)	pH	Eh (mv)	DO (mg/L)	Turbidity (NTU)
1150	(Finish @		29 GW 30)						

Sampling

Sampling beginning time: 1116 Sampling completion time: 1118

Water Quality Parameter Measurements

Time	DTW (ft. BTOC)	Purge Rate (mL/min)	Cumulative Volume Purged (L)	Temp. (degree C)	Electrical Conductivity (uMnos/cm)	pH	Eh (mv)	DO (mg/L)	Turbidity (NTU)
1120	32.95	220		17.7	3.267	6.28	50.1	1.10	0.0

Sample Information

Sample ID: 29 GW 30

Sample collection date/time: 01-21-09 / 1116

Duplicate sample collected (Y/N): NO

Duplicate sample ID: NA

Split sample collected (Y/N): NO

Split sample ID: NA

COC No(s):

Requested Analysis	Method	Containers	Requested Analysis	Method	Containers
Chromium		1x500 mL HDPE			

Comments:

Sample is transparent. No signs of sediments.

Abbreviations: BTOC - Below top of casing; DTW - Depth to water; H - head above pump intake; mL - milliliter; L - Liter

01-21-09 MSM

Area 29 Sampling

Low Flow 29WW01

29WW29

29WW25

29WW30

Analysis Chromium.

Calibrated YSI

Decon Equipment

0800 @ 29WW29

Set up

pump on

0847 Initial Reading

0957 Final Reading

0938 Sample

0942 Finish Sample

1 x 500 mL HDPE Chromium

Decon Equipment

1000 Done w 29WW29

01-21-09 MSM

@ 29WW30

Set up

pump on

1040 Initial Reading

1115 Final Reading

1116 Sample

1118 Finish Sample

1 x 500 mL HDPE Chromium

Decon Equipment

1150 Done w 29WW30

@ ~~WW 29 01~~ WW 29 WW01

Set up

pump on

1315 Initial Reading

1350 Final Reading

1351 Sample

1353 Finish Sample

1 x 500 mL HDPE Chromium

Decon Equipment

1400 Done w 29WW01

01-24-09 MBW

@ 29WW25

Set up

pump on

1430 Init. O Reading

1505 Fin. Reading

1506 Sample

used Filter for Sample.

All Parameter stable

NTU above 10

Sample is greenish yellow tint

1525 Finish Sample

1 x 500 mL HDPE Chromium

Decon Equipment

1545 Done w 29WW25

MBW